SIEMENS

Data sheet US2:22DUC32FG



Reversing motor starter, Size 1, Three phase full voltage, Solid-state overload relay, OLR amp range 3-12A, Non-combination type, Enclosure type 4X fiberglass, Water/dust tight noncorrosive, Standard width enclosure

product brand name	Class 22
design of the product	Full-voltage reversing motor starter
special product feature	ESP200 overload relay
General technical data	
weight [lb]	17 lb(av)
Height x Width x Depth [in]	24 × 15 × 7 in
touch protection against electrical shock	NA for enclosed products
installation altitude [ft] at height above sea level maximum	6560 ft
ambient temperature [°F]	
● during storage	-22 ... +149 °F
● during operation	-4 ... +104 °F
ambient temperature	
● during storage	-30 ... +65 °C
● during operation	-20 ... +40 °C
country of origin	USA
Horsepower ratings	
yielded mechanical performance [hp] for 3-phase AC motor	
● at 200/208 V rated value	2 hp
● at 220/230 V rated value	2 hp
● at 460/480 V rated value	5 hp
● at 575/600 V rated value	5 hp
Contactor	
size of contactor	NEMA controller size 1
number of NO contacts for main contacts	3
operating voltage for main current circuit at AC at 60 Hz maximum	600 V
operational current at AC at 600 V rated value	27 A
mechanical service life (operating cycles) of the main contacts typical	10000000
Auxiliary contact	
number of NC contacts at contactor for auxiliary contacts	0
number of NO contacts at contactor for auxiliary contacts	1
number of total auxiliary contacts maximum	8
contact rating of auxiliary contacts of contactor according to UL	345VA@115VAC / 768VA@240VAC
Coil	
type of voltage of the control supply voltage	AC
control supply voltage	
● at AC at 50 Hz rated value	190 ... 220 V
● at AC at 60 Hz rated value	220 ... 240 V
holding power at AC minimum	8.6 W
apparent pick-up power of magnet coil at AC	218 VA

Subject to change without notice
© Copyright Siemens

apparent holding power of magnet coil at AC	25 VA
operating range factor control supply voltage rated value of magnet coil	0.85 ... 1.1
percental drop-out voltage of magnet coil related to the input voltage	50 %
ON-delay time	19 ... 29 ms
OFF-delay time	10 ... 24 ms
Overload relay	
product function	
● overload protection	Yes
● phase failure detection	Yes
● asymmetry detection	Yes
● ground fault detection	Yes
● test function	Yes
● external reset	Yes
reset function	Manual, automatic and remote
trip class	CLASS 5 / 10 / 20 (factory set) / 30
adjustable current response value current of the current-dependent overload release	3 ... 12 A
make time with automatic start after power failure maximum	3 s
relative repeat accuracy	1 %
product feature protective coating on printed-circuit board	Yes
number of NC contacts of auxiliary contacts of overload relay	1
number of NO contacts of auxiliary contacts of overload relay	1
operational current of auxiliary contacts of overload relay	
● at AC at 600 V	5 A
● at DC at 250 V	1 A
contact rating of auxiliary contacts of overload relay according to UL	5A@600VAC (B600), 1A@250VDC (R300)
insulation voltage (Ui)	
● with single-phase operation at AC rated value	600 V
● with multi-phase operation at AC rated value	300 V
Enclosure	
design of the housing	dustproof, waterproof & resistant to corrosion
Mounting/wiring	
mounting position	Vertical
fastening method	Surface mounting and installation
type of electrical connection for supply voltage line-side	Screw-type terminals
tightening torque [lbf·in] for supply	35 ... 35 lbf·in
type of connectable conductor cross-sections at line-side for AWG cables single or multi-stranded	1x (14 ... 2 AWG)
temperature of the conductor for supply maximum permissible	75 °C
material of the conductor for supply	AL or CU
type of electrical connection for load-side outgoing feeder	Screw-type terminals
tightening torque [lbf·in] for load-side outgoing feeder	35 ... 35 lbf·in
type of connectable conductor cross-sections for AWG cables for load-side outgoing feeder single or multi-stranded	1x (14 ... 2 AWG)
temperature of the conductor for load-side outgoing feeder maximum permissible	75 °C
material of the conductor for load-side outgoing feeder	AL or CU
type of electrical connection of magnet coil	Screw-type terminals
tightening torque [lbf·in] at magnet coil	5 ... 12 lbf·in
type of connectable conductor cross-sections of magnet coil for AWG cables single or multi-stranded	2x (16 ... 12 AWG)
temperature of the conductor at magnet coil maximum permissible	75 °C
material of the conductor at magnet coil	CU
type of electrical connection for auxiliary contacts	Screw-type terminals
tightening torque [lbf·in] at contactor for auxiliary contacts	10 ... 15 lbf·in
type of connectable conductor cross-sections at contactor for AWG cables for auxiliary contacts single or multi-stranded	1x (12 AWG), 2x (16 ... 14 AWG), 2x (18 ... 16 AWG)
temperature of the conductor at contactor for auxiliary contacts maximum permissible	75 °C
material of the conductor at contactor for auxiliary contacts	CU

Subject to change without notice
© Copyright Siemens

type of electrical connection at overload relay for auxiliary contacts	Screw-type terminals
tightening torque [lbf·in] at overload relay for auxiliary contacts	7 ... 10 lbf·in
type of connectable conductor cross-sections at overload relay for AWG cables for auxiliary contacts single or multi-stranded	2x (20 ... 14 AWG)
temperature of the conductor at overload relay for auxiliary contacts maximum permissible	75 °C
material of the conductor at overload relay for auxiliary contacts	CU
Short-circuit current rating	
design of the fuse link for short-circuit protection of the main circuit required	10kA@600V (Class H or K); 100kA@600V (Class R or J)
design of the short-circuit trip	Thermal magnetic circuit breaker
maximum short-circuit current breaking capacity (Icu)	
• at 240 V	14 kA
• at 480 V	10 kA
• at 600 V	10 kA
certificate of suitability	NEMA ICS 2; UL 508; CSA 22.2, No.14
Approvals Certificates	
Test Certificates	

UL

Further information

Industrial Controls - Product Overview (Catalogs, Brochures,…)
www.usa.siemens.com/iccatalog
Industry Mall (Online ordering system)
https://mall.industry.siemens.com/mall/en/us/Catalog/product?mlfb=US2:22DUC32FG
Service&Support (Manuals, Certificates, Characteristics, FAQs,...)
https://support.industry.siemens.com/cs/US/en/ps/US2:22DUC32FG
Image database (product images, 2D dimension drawings, 3D models, device circuit diagrams, EPLAN macros, ...)
http://www.automation.siemens.com/bilddb/cax_de.aspx?mlfb=US2:22DUC32FG&lang=en
Certificates/approvals
https://support.industry.siemens.com/cs/US/en/ps/US2:22DUC32FG/certificate

© Copyright Siemens

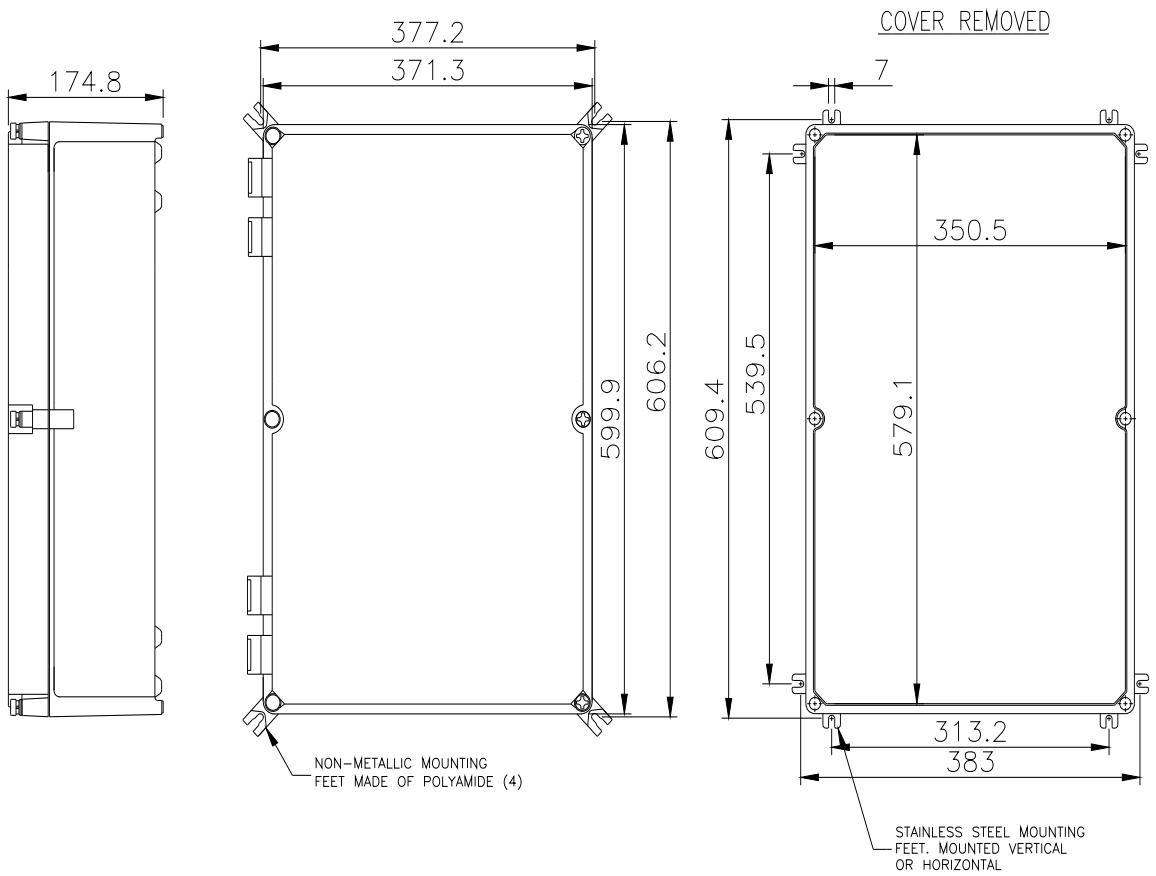

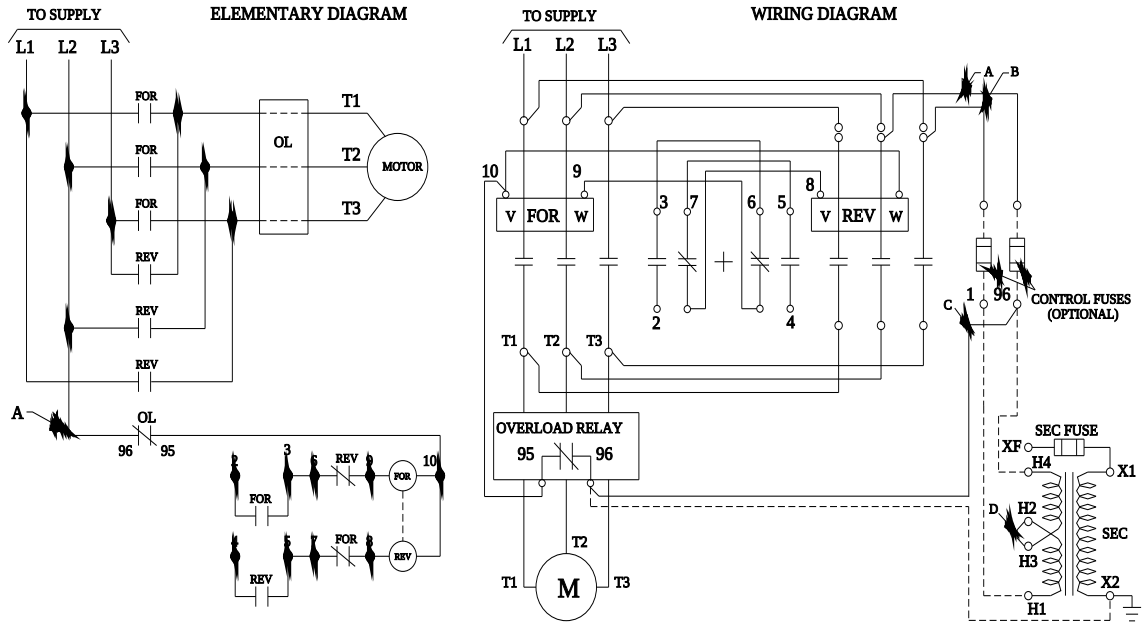

D46590003

last modified: 12/6/2023

Subject to change without notice
© Copyright Siemens

Subject to change without notice
© Copyright Siemens