Technical Data

Original Instructions

Kinetix Rotary Motion Specifications

Kinetix TL, TLY, TLP, MPL, MPM, MPF, MPS, VPL, VPC, VPF, VPH, VPS, HPK, MMA, RDB

Topic	Page
Summary of Changes	2
Motor and Drive Compatibility	2
Kinetix VPL Low-inertia Servo Motors	3
Kinetix VPC Continuous-duty Servo Motors	26
Kinetix VPF Food-grade Servo Motors	51
Kinetix VPH Hygienic Stainless-steel Servo Motors	70
Kinetix VPS Stainless-steel Servo Motors	82
Kinetix MPL Low-inertia Servo Motors	88
Kinetix MPM Medium-inertia Servo Motors	105
Kinetix MPF Food-grade Servo Motors	115
Kinetix MPS Stainless-steel Servo Motors	123
Kinetix TLP Multi-purpose Servo Motors	129
Kinetix TL and TLY Compact Servo Motors	144
Kinetix RDB Direct-drive Servo Motors	157
Kinetix HPK Asynchronous Servo Motors	165
Kinetix MMA Asynchronous Main Motors	177
Common Rotary Motor Specifications	206
Additional Resources	209

This publication provides catalog numbers and product specifications, including performance, environmental, certifications, load force, and dimension drawings for Allen-Bradley® rotary motors.

Use this publication in conjunction with the Kinetix® Motion Control Selection Guide, publication KNX-SG001, to help make decisions on the motion control products best suited for your system requirements.

Allen Bradley MPL-A330P-SK74AA | gesrepair.com

Summary of Changes

This publication contains the following new or updated information. This list includes substantive updates only and is not intended to reflect all changes.

Topic	Page
Updated the environmental ratings for Kinetix VPL motors when used with ArmorKinetix® DSD modules.	3
Added performance specifications for MPF-B560F motors.	119
Added motor brake specification for MPF-B560F motors.	119
Added radial and axial load force ratings for MPF-B560 motors.	120
Updated the weight for HPK-B2010E motors.	167

Motor and Drive Compatibility

Servo Drive Family	Kinetix TL	Kinetix TLY	Kinetix TLP	Kinetix MPL	Kinetix MPM	Kinetix MPF	Kinetix MPS	Kinetix VPL	Kinetix VPC	Kinetix VPF	Kinetix VPH	Kinetix VPS	Kinetix HPK	Kinetix MMA	Kinetix RDB
ArmorKinetix	–	–	–	X	X	X	X	X	–	X	X	X	–	–	–
Kinetix 5700	–	–	–	X	X	X	X	X	X	X	X	X	X	X	X
Kinetix 5500	–	–	–	X	X	X	X	X	–	X	X	X	–	–	–
Kinetix 5100	X	X	X	X	X	X	X	–	–	–	–	–	–	–	–
Kinetix 5300	X	X	X	X	X	X	X	–	–	–	–	–	–	–	–
Kinetix 6500	–	–	–	X	X	X	X	–	–	–	–	–	–	–	X
Kinetix 6200	–	–	–	X	X	X	X	–	–	–	–	–	–	–	X
Kinetix 6000	–	X (TLY-A*xx*-H)	–	X	X	X	X	–	–	–	–	–	–	–	X
Kinetix 300/350	–	X	–	X	X	X	X	–	–	–	–	–	–	–	–
Kinetix 3	X (TL-A*xx*-B)	X	–	–	–	–	–	–	–	–	–	–	–	–	–
Kinetix 2000	–	X	–	X	X	X	X	–	–	–	–	–	–	–	–
Kinetix 7000	–	–	–	X	X	–	–	–	–	–	–	–	X	X	X

IMPORTANT ArmorKinetix Distributed Servo Motor (DSM) module information can be found in Kinetix 5700, 5500, 5300, and 5100 Servo Drives Specifications, publication KNX-TD003.

Kinetix VPL Low-inertia Servo Motors



Kinetix VPL servo motors are available with winding options matched to the ratings of Kinetix 5500 drives, Kinetix 5700 dual-axis inverters, and ArmorKinetix DSD modules. Optimized system sizing lowers system cost and improves energy efficiency. The digital feedback device provides real-time motor performance information to the control system and the Kinetix 2090 single cable design between motor and drive simplifies installation. Kinetix VPL servo motors are based on proven Kinetix MPL servo motor technology for dynamic performance, increased reliability, and leverages high volume production.

Kinetix VPL Servo Motor Features

Attribute	Value
Main characteristics	• Developed to match the ratings of Kinetix 5500 drives and Kinetix 5700 dual-axis inverters • Kinetix 2090 single cable technology and ArmorKinetix 2090 cable • Hiperface DSL encoder protocol • High torque to size ratio • Low rotor inertia
Features	• 200V and 400V-class windings • Single-turn and multi-turn absolute feedback • SIL 2 (PLd) rated encoder options • High-energy rare-earth magnets • Shaft-end threaded hole • SpeedTec DIN connector, rotates 325° • Standard IEC 72-1 mounting dimensions
Motor type	Brushless AC synchronous servo motors
Environmental rating	• IP50 minimum, without shaft seal (standard) • IP66 with optional shaft seal and use of Rockwell Automation® factory-delivered Kinetix 2090 cables
Certifications	Kinetix VPL rotary motors are UL Recognized components to applicable UL and CSA standards. CE and UK marked for all applicable directives. Refer to rok.auto/certifications for the Product Certifications website.
Continuous stall torque	0.46…33 N•m (4…292 lb•in)
Peak stall torque	1.33…79 N•m (12…702 lb•in)
Rated speed	Up to 8000 rpm
Motor rated output	0.19…7.16 kW (0.25…9.60 Hp)
Compatible servo drives	• Kinetix 5700 • Kinetix 5500 • ArmorKinetix DSD
Compatible servo cables	• 2090-CS*x*M1*xx*-*xx*AA/AF*xx* (TPE) cables • 2090-CS*x*M1*xx*-*xx*VA/LF*xx* (PVC and PUR) cables • 2090-CSBM1P7-14AF*xx* (PUR) cables
Typical applications	• Packaging • Converting • Material handling • Electronic assembly • Automotive

Catalog Numbers - Kinetix VPL Servo Motors

Catalog numbers consist of various characters, each of which identifies a specific option for that component. Use the catalog numbering table chart below to understand the configuration of your motor. For questions regarding product availability, contact your Allen-Bradley distributor.

VP L - x xxx x x - x x 1 x A x

Factory Options
A = Standard
S = Shaft seal

Mounting Flange
A = IEC metric, free mounting holes (type FF)

Brake
2 = No brake
4 = 24V DC holding brake

Connector
1 = Single SpeedTec DIN connector, right angle, 325° rotatable

Shaft Key
J = Shaft key
K = Smooth shaft

Feedback
C = 18-bit absolute single-turn digital encoder (Hiperface DSL protocol)
P = 18-bit absolute multi-turn digital encoder (Hiperface DSL protocol)
W = 18-bit absolute multi-turn digital encoder (Hiperface DSL protocol) SIL 2 (PLd) rated, 9-bit secondary safety channel (1)
Q = 23-bit absolute multi-turn digital encoder (Hiperface DSL protocol) SIL 2 (PLd) rated, 12-bit secondary safety channel (2)

Rated Speed (3) (4)

A = 1500 rpm	D = 3000 rpm	M= 6000 rpm
B = 2000 rpm	E = 3500 rpm	T = 6750 rpm
C = 2500 rpm	F = 4500 rpm	U = 8000 rpm

Magnet Stack Length (1, 2, 3, 4, 6 stacks) (4)

Frame Size - Bolt Circle Diameter (BCD)

063 = 63 mm	115 = 115 mm
075 = 75 mm	130 = 130 mm
100 = 100 mm	165 = 165 mm

Voltage Class
A = 200V
B = 400V

Series Type
L = Low inertia

Series
VP = Permanent magnet rotary servo motors that are optimized to Kinetix 5500 and Kinetix 5700 drive ratings

(1) This encoder option is available with only VPL-B063*xx* and VPL-B075*xx* motor frame sizes.
(2) This encoder option is available with only VPL-A/B100*xx*, VPL-A/B115*xx*, VPL-A/B130*xx*, and VPL-B165*xx* motor frame sizes.
(3) Rated speed hierarchy is only for comparative purposes. Use Motion Analyzer software to size and select motors for your application, and/or the torque/speed curves in the Kinetix 5500 Drive System Design Guide, publication KNX-RM009, and the Kinetix 5700 Drive System Design Guide, publication KNX-RM010.
(4) Not all combinations are available. Only the configurations for rated speed and magnet stack length, as listed in Kinetix VPL Servo Motor (200V-class) Performance Specifications on page 7 and Kinetix VPL Servo Motor (400V-class) Performance Specifications on page 8, are available. Use Motion Analyzer software to size and select motors for your application.

Kinetix VPL Servo Motor High-resolution Encoders

Kinetix VPL servo motors are available with high-performance encoders with a choice of single-turn (-C), multi-turn (-P), and SIL 2 rated (-Q and -W) multi-turn high-resolution feedback:

- 18-bit resolution for 262,144 counts per revolution (choice of single-turn or multi-turn)
  - Single-turn encoder (-C) provides absolute position feedback within one turn
  - Multi-turn encoder (-P) provides absolute position feedback within 4096 turns
  - Electromechanical design does not require a battery.
- SIL 2 rated absolute multi-turn digital encoder (Hiperface DSL protocol)
  - 23-bit resolution for 8,388,608 counts per revolution, multi-turn absolute position feedback within 4096 turns (-Q) option has 12-bit secondary safety channel
  - 18-bit resolution for 262,144 multi-turn absolute position feedback within 4096 turns (-W) option has 9-bit secondary safety channel

Kinetix 2090 Single Cable Technology

Motor connectivity reduced to a single connector and cable.

- Single cable eliminates hardware and wire terminations
- Purely digital two-wire communication integrated into the motor power cable
- TPE cable material for standard (non-flex) and continuous-flex cable
- PVC cable material for standard (non-flex) and Halogen-free PUR continuous-flex cable
- 2090-CSxM1D*x* cables are available in 1.0 m (3.2 ft) increments up to 50 m (164 ft) for Kinetix 5500 drives, 90 m (295 ft) for Kinetix 5700 drives
- 2090-CSBM1P7-14AFxx are available in 1 m (3.2 ft) increments up to 4 m (13.1 ft) for ArmorKinetix DSD modules

IMPORTANT Due to the unique characteristics of Kinetix 2090 single cable technology, designed for and tested with Kinetix 5500 drives, Kinetix 5700 dual-axis inverters, ArmorKinetix DSD modules, and Kinetix VP servo motors, building your own cables or using third-party cable is not an option.

Motor Connector/Cable Compatibility

Kinetix VPL servo motors are equipped with SpeedTec DIN connectors.

Single SpeedTec Connector

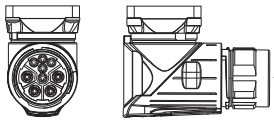

- VPL-A/B063*xxx*...VPL-B165*xxx* motors
- Receives only single cable plugs
- Attach cable plug with one-quarter turn

SpeedTec DIN (M1) Single Cable Plug

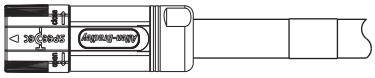

- 2090-CSBM1DF-*xx*AA*xx* (standard, non-flex) power/feedback/brake cables
- 2090-CSWM1DF-*xx*AA*xx* (standard, non-flex) power/feedback cables
- 2090-CSBM1DF-*xx*AF*xx* (continuous-flex) power/feedback/brake cables
- 2090-CSBM1DE-*xxx*A*xx* (standard, non-flex) power/feedback/brake cables
- 2090-CSWM1DE-*xxx*A*xx* (standard, non-flex) power/feedback cables
- 2090-CSBM1DE-*xxx*F*xx* (continuous-flex) power/feedback/brake cables
- 2090-CSBM1DG-*xxx*A*xx* (standard, non-flex) power/feedback/brake cables
- 2090-CSWM1DG-*xxx*A*xx* (standard, non-flex) power/feedback cables
- 2090-CSBM1DG-*xxx*F*xx* (continuous-flex) power/feedback/brake cables

- 2090-CSxM1DF cables apply to Kinetix 5500 drives
- 2090-CSxM1DE cables apply to Kinetix 5700 drives
- 2090-CSxM1DG cables apply to Kinetix 5500 or Kinetix 5700 drives
- 2090-CSBM1P7 cables apply to ArmorKinetix DSD modules



2090-CSBM1P7-14AF*xx* ArmorKinetix motor power/feedback cable

For Kinetix 2090 single motor cable specifications and ArmorKinetix hybrid cable specifications, refer to Kinetix Rotary and Linear Motion Cable Specifications Technical Data, publication KNX-TD004.

Kinetix VPL Servo Motor Options

Kinetix VPL servo motors are available with these configurable options:

- Single-turn or multi-turn encoder.
- 24V DC holding brake.
- Choice of keyed or keyless shaft.
- Shaft seal kits are available, as are replacement kits for field installation. Shaft seals are made of nitrile and kits include a lubricant to reduce wear.

IMPORTANT Shaft seals are subject to wear and require periodic inspection and replacement. Replacement is recommended every 3 months, not to exceed 12 months, depending on use.

Shaft Seal Kit Catalog Numbers

Motor Cat. No.	Shaft Seal Kit Cat. No.
VPL-A063*xx* and VPL-B063*xx*	VPL-SSN-F063075
VPL-A075*xx* and VPL-B075*xx*	
VPL-A100*xx* and VPL-B100*xx*	MPL-SSN-A3B3
VPL-A115*xx* and VPL-B115*xx*	MPL-SSN-A4B4
VPL-A130*xx* and VPL-B130*xx*	MPL-SSN-A5B5
VPL-B165*xx*	MPL-SSN-F165

Refer to the Kinetix VPL Low-inertia Servo Motors Installation Instructions, publication VPL-IN001, for more information on motor accessories.

Technical Specifications - Kinetix VPL Servo Motors

Kinetix VPL Servo Motor (200V-class) Performance Specifications

Motor Cat. No.	Rated Speed rpm	Maximum Speed rpm	Continuous Stall Torque N•m (lb•in)	Peak Stall Torque N•m (lb•in)	Motor Rated Output kW (Hp)	Rotor Inertia (1) kg-m^2 (lb•in•s^2)	Motor Weight, (1) approx kg (lb)
VPL-A0631E	4500	4500	0.46 (4.0)	1.33 (12.0)	0.19 (0.25)	0.0000094 (0.000083)	1.04 (2.30)
VPL-A0631M	7200	7200	0.46 (4.0)	1.33 (12.0)	0.28 (0.38)		
VPL-A0632F	4800	4800	0.93 (8.0)	2.69 (24.0)	0.39 (0.52)	0.000017 (0.00015)	1.36 (3.0)
VPL-A0633C	3000	3000	1.27 (11.0)	4.09 (36.0)	0.37 (0.50)	0.0000247 (0.00022)	1.68 (3.70)
VPL-A0633F	4500	4500	1.27 (11.0)	4.09 (36.0)	0.50 (0.67)		
VPL-A0751E	4800	4800	1.01 (9.0)	2.27 (20.0)	0.44 (0.59)	0.0000136 (0.00012)	1.48 (3.26)
VPL-A0752C	3300	3300	1.61 (14.0)	4.39 (39.0)	0.49 (0.66)	0.000025 (0.00022)	2.03 (4.47)
VPL-A0752E	4800	4800	1.61 (14.0)	4.39 (39.0)	0.66 (0.88)		
VPL-A0753C	3300	3300	2.16 (19.0)	7.02 (62.0)	0.59 (0.79)	0.0000365 (0.00032)	2.59 (5.70)
VPL-A0753E	4600	4600	2.28 (20.0)	7.35 (65.0)	0.80 (1.07)		
VPL-A1001C	2800	2800	1.93 (17.0)	3.78 (33.0)	0.56 (0.75)	0.000044 (0.00039)	2.63 (5.80)
VPL-A1001M	6500	6500	1.95 (17.0)	3.78 (33.0)	1.29 (1.73)		
VPL-A1002C	3000	3000	3.39 (30.0)	7.82 (69.0)	1.03 (1.38)	0.000078 (0.00069)	4.52 (9.95)
VPL-A1002F	5000	5000	3.26 (29.0)	7.82 (69.0)	1.60 (2.14)		
VPL-A1003C	2250	2250	4.18 (37.0)	11.15 (99.0)	0.87 (1.17)	0.00012 (0.0010)	4.45 (9.80)
VPL-A1003E	3750	3750	4.18 (37.0)	11.15 (99.0)	1.31 (1.76)		
VPL-A1003F	5500	5500	4.18 (37.0)	11.15 (99.0)	1.90 (2.55)		
VPL-A1152B	2150	2150	5.10 (45.0)	13.12 (116)	1.02 (1.37)	0.00026 (0.0023)	4.43 (9.75)
VPL-A1152E	3300	3300	5.08 (45.0)	13.12 (116)	1.47 (1.97)		
VPL-A1152F	5000	5000	4.70 (42.0)	13.12 (116)	2.16 (2.90)		
VPL-A1153C	2300	2300	6.55 (58.0)	20.33 (180)	1.35 (1.81)	0.00038 (0.0033)	6.01 (13.23)
VPL-A1303B	1950	1950	8.80 (78.0)	20.72 (183)	1.61 (2.16)	0.00040 (0.0035)	7.54 (16.60)
VPL-A1303F	4000	4000	7.75 (69.0)	20.72 (183)	2.50 (3.35)		
VPL-A1304A	1600	1600	10.29 (91.0)	28.45 (252)	1.55 (2.08)	0.00052 (0.0046)	9.10 (20.05)
VPL-A1304D	3000	3000	10.20 (90.0)	27.10 (240)	2.60 (3.50)		
VPL-A1306C	2000	2000	13.38 (118)	34.62 (306)	2.13 (2.86)	0.00078 (0.0069)	12.21 (26.90)

(1) Refer to Kinetix VPL Servo Motor Brake Specifications on page 9 for brake rotor inertia and brake motor weight.

Kinetix VPL Servo Motor (400V-class) Performance Specifications

Motor Cat. No.	Rated Speed rpm	Maximum Speed rpm	Continuous Stall Torque N•m (lb•in)	Peak Stall Torque N•m (lb•in)	Motor Rated Output kW (Hp)	Rotor Inertia (1) kg-m^2 (lb•in•s^2)	Motor Weight, (1) approx kg (lb)
VPL-B0631T	8000	8000	0.46 (4.0)	1.33 (12.0)	0.31 (0.42)	0.0000094 (0.000083)	1.04 (2.30)
VPL-B0631U	8000	8000	0.46 (4.0)	1.33 (12.0)	0.31 (0.42)		
VPL-B0632F	4600	4600	0.93 (8.0)	2.69 (24.0)	0.37 (0.50)	0.000017 (0.00015)	1.36 (3.00)
VPL-B0632T	8000	8000	0.93 (8.0)	2.69 (24.0)	0.54 (0.72)		
VPL-B0633M	6500	6700	1.27 (11.0)	4.09 (36.0)	0.57 (0.76)	0.0000247 (0.00022)	1.68 (3.70)
VPL-B0633T	6500	8000	1.27 (11.0)	4.09 (36.0)	0.57 (0.76)		
VPL-B0751M	8000	8000	1.01 (9.0)	2.27 (20.0)	0.54 (0.72)	0.0000136 (0.00012)	1.48 (3.26)
VPL-B0752E	4900	4900	1.61 (14.0)	4.39 (39.0)	0.67 (0.90)	0.0000250 (0.00022)	2.03 (4.47)
VPL-B0752F	7000	7000	1.61 (14.0)	4.39 (39.0)	0.80 (1.07)		
VPL-B0752M	8000	8000	1.61 (14.0)	4.39 (39.0)	0.81 (1.09)		
VPL-B0753E	4500	4500	2.28 (20.0)	7.35 (65.0)	0.81 (1.09)	0.0000365 (0.00032)	2.59 (5.70)
VPL-B0753F	4500	6600	2.16 (19.0)	7.02 (62.0)	0.65 (0.87)		
VPL-B0753M	6000	8000	2.28 (20.0)	7.35 (65.0)	0.82 (1.10)		
VPL-B1001M	6000	6000	1.93 (17.0)	3.78 (33.0)	1.14 (1.53)	0.000044 (0.00039)	2.63 (5.80)
VPL-B1002E	3300	3300	3.39 (30.0)	7.82 (69.0)	1.12 (1.50)	0.000078 (0.00069)	3.56 (7.85)
VPL-B1002M	6000	6000	3.39 (30.0)	7.82 (69.0)	1.86 (2.49)		
VPL-B1003C	2500	2500	4.18 (37.0)	11.15 (99.0)	0.96 (1.29)	0.00012 (0.0010)	4.45 (9.80)
VPL-B1003F	4750	4750	4.18 (37.0)	11.15 (99.0)	1.65 (2.21)		
VPL-B1003T	7000	7000	4.18 (37.0)	11.15 (99.0)	1.77 (2.37)		
VPL-B1152C	2250	2250	5.10 (45.0)	13.12 (116)	1.06 (1.42)	0.00026 (0.0023)	5.30 (11.67)
VPL-B1152F	4000	4500	5.10 (45.0)	13.12 (116)	1.40 (1.88)		
VPL-B1152T	6500	6500	5.08 (45.0)	13.12 (116)	2.29 (3.07)		
VPL-B1153E	3200	3200	6.55 (58.0)	20.33 (180)	1.75 (2.35)	0.00038 (0.0033)	6.01 (13.23)
VPL-B1153F	5000	5000	6.55 (58.0)	20.33 (180)	2.30 (3.08)		
VPL-B1303C	2250	2250	8.80 (78.0)	20.72 (183)	1.83 (2.45)	0.00040 (0.0035)	7.54 (16.60)
VPL-B1303F	4000	4000	8.80 (78.0)	20.72 (183)	2.82 (3.78)		
VPL-B1304C	2150	2150	10.29 (91.0)	28.45 (252)	1.75 (2.35)	0.00052 (0.0046)	9.10 (20.05)
VPL-B1304E	3500	3500	10.29 (91.0)	28.45 (252)	2.82 (3.78)		
VPL-B1306C	2500	2500	13.38 (118)	34.62 (306)	2.46 (3.30)	0.00078 (0.0069)	12.21 (26.9)
VPL-B1306F	4250	4250	13.38 (118)	34.62 (306)	2.95 (3.95)		
VPL-B1651C	2750	2750	11.50 (102)	22.45 (199)	2.32 (3.11)	0.000783 (0.0069)	15.30 (33.70)
VPL-B1651F	4750	4750	11.43 (101)	22.45 (199)	4.38 (5.87)		
VPL-B1652C	2700	2700	19.40 (172)	48.60 (430)	4.18 (5.60)	0.00147 (0.013)	17.80 (39.24)
VPL-B1652F	4000	4000	17.60 (156)	48.60 (430)	4.77 (6.40)		
VPL-B1653C	2300	2300	25.76 (228)	66.70 (590)	4.38 (5.87)	0.00213 (0.019)	20.66 (45.50)
VPL-B1653D	3000	3000	24.20 (214)	67.80 (600)	5.50 (7.30)		
VPL-B1654B	1850	1850	32.97 (292)	79.30 (702)	5.55 (7.44)	0.00289 (0.025)	25.65 (56.55)
VPL-B1654D	3000	3000	32.0 (283)	75.30 (666)	7.16 (9.60)		

(1) Refer to Kinetix VPL Servo Motor Brake Specifications on page 9 for brake rotor inertia and brake motor weight.

Kinetix VPL Servo Motor Brake Specifications

Motor Cat. No.	Backlash, max (brake engaged) arc minutes	Holding Torque N•m (lb•in)	Coil Current at 24V DC A	Brake Response Time		Brake Rotor Inertia kg-m^2 (lb•in•s^2)	Brake Motor Weight, approx kg (lb)
				Release ms	Engage [1] ms		
VPL-A/B0631	30	1.50 (13)	0.297...0.363	38	25	0.0000118 (0.00010)	1.36 (3.0)
VPL-A/B0632						0.0000194 (0.00017)	1.70 (3.74)
VPL-A/B0633						0.0000271 (0.00024)	2.02 (4.45)
VPL-A/B0751		3.0 (27)	0.567...0.693	66	42	0.0000182 (0.00016)	2.06 (4.54)
VPL-A/B0752						0.0000297 (0.00026)	2.62 (5.77)
VPL-A/B0753						0.0000412 (0.00036)	3.18 (7.0)
VPL-A/B1001	30	4.18 (37)	0.45...0.55	90	65	0.000059 (0.00052)	3.26 (7.19)
VPL-A/B1002						0.000093 (0.00082)	4.20 (9.24)
VPL-A/B1003						0.000135(0.0012)	5.08 (11.19)
VPL-A/B1152		6.55 (58)	0.621...0.759	90	95	0.000289 (0.0025)	5.43 (11.95)
VPL-A/B1153						0.000409 (0.0036)	6.88 (15.15)
VPL-A/B1303		14.10 (125)	0.738...0.902	125	120	0.000433 (0.0038)	8.64 (19.03)
VPL-A/B1304						0.000553 (0.0049)	10.21 (22.48)
VPL-A/B1306						0.000813 (0.0072)	13.32 (29.33)
VPL-B1651		32.0 (283)	1.053...1.287	140	120	0.000845 (0.0075)	17.15 (37.78)
VPL-B1652						0.00153 (0.013)	19.65 (43.32)
VPL-B1653						0.00219 (0.019)	22.51 (49.58)
VPL-B1654						0.00295 (0.026)	27.50 (60.63)

(1) By using diode and zener diode as arc suppression device in external control circuit.

Kinetix VPL Servo Motor Load Force Ratings

Kinetix VPL servo motors are capable of operating with the maximum radial or maximum axial shaft loads listed in the following tables. Radial loads listed are applied in the middle of the shaft extension. The tables starting below represent an L_{10} bearing fatigue life of 20,000 hours. This 20,000-hour life does not account for possible application-specific life reduction that can occur due to bearing grease contamination from external sources. Maximum operating speed is limited by motor winding.

Load Forces on Shaft

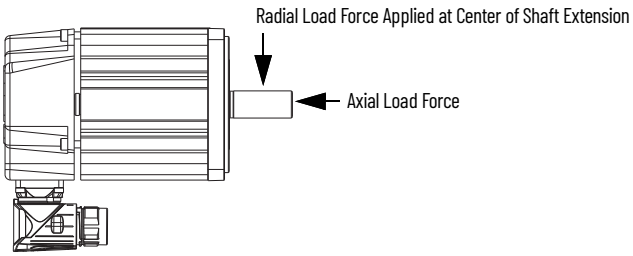

Kinetix VPL Servo Motors (063...075 frame size)

Radial Load Force Ratings (maximum) for Non-brake Motors

Motor Cat. No. (1)	Maximum Speed rpm	Load (kgf) at Speed (rpm)														
		500 kgf	1000 kgf	1500 kgf	2000 kgf	2500 kgf	3000 kgf	3500 kgf	4000 kgf	4500 kgf	5000 kgf	6000 kgf	6500 kgf	7000 kgf	7500 kgf	8000 kgf
VPL-A0631E	4500	–	26.7	–	–	20.8 *	18.5	–	–	16.2	–	–	–	–	–	–
VPL-A0631M	7200	–	–	23.3	–	19.7	–	–	–	16.7 *	–	–	–	–	13.8	–
VPL-A0632F	4800	–	28.9	25.2	–	–	21.0 *	–	–	–	17.1 *	–	–	–	–	–
VPL-A0633C	3000	38.1	30.3	27.4 *	–	–	21.0	–	–	–	–	–	–	–	–	–
VPL-A0633F	4500	38.1	–	26.4	–	–	21.0	–	–	18.3	–	–	–	–	–	–
VPL-A0751E	4800	33.3	26.4	–	–	20.6 *	–	–	–	–	15.7 *	–	–	–	–	–
VPL-A0752C	3300	36.1	28.6	25.9 *	–	–	–	19.2 *	–	–	–	–	–	–	–	–
VPL-A0752E	4800	36.1	28.6	–	–	21.8 *	–	–	–	–	17.0 *	–	–	–	–	–
VPL-A0753C	3300	37.8	30.0	27.5 *	–	–	–	20.2 *	–	–	–	–	–	–	–	–
VPL-A0753E	4600	37.8	30.0	–	–	23.3 *	–	–	–	–	18.0 *	–	–	–	–	–
VPL-B0631T	8000	–	–	23.3	–	–	18.5	–	–	–	–	14.9 *	–	–	–	13.3
VPL-B0631U	8000	–	–	23.3	–	–	18.5	–	–	–	15.6	–	–	–	–	13.3
VPL-B0632F	4600	–	28.9	25.2	–	–	21.0 *	–	–	–	17.1 *	–	–	–	–	–
VPL-B0632T	8000	–	–	–	22.9	–	–	–	18.2	–	–	–	15.6 *	–	–	14.4
VPL-B0633M	6700	–	30.3	–	24.0	–	–	–	19.2 *	–	–	–	–	15.9 *	–	–
VPL-B0633T	8000	–	–	26.4	–	–	21.0	–	–	–	–	16.8 *	–	–	–	15.1
VPL-B0751M	8000	–	–	23.1	–	–	18.3	–	–	–	15.7 *	–	–	–	–	13.2
VPL-B0752E	4900	36.1	28.6	–	–	22.0 *	–	–	–	–	17.0 *	–	–	–	–	–
VPL-B0752F	7000	–	28.6	–	22.7	–	–	19.3 *	–	–	–	–	–	15.0	–	–
VPL-B0752M	8000	–	–	25.0	–	–	20.8	–	–	–	16.8 *	–	–	–	–	14.3
VPL-B0753E	4500	37.8	30.0	–	23.8	–	–	–	–	18.2	–	–	–	–	–	–
VPL-B0753F	6600	–	30.0	–	23.8	–	–	20.6 *	–	–	–	–	16.1	–	–	–
VPL-B0753M	8000	–	–	26.2	–	–	19.8	–	–	–	18.0 *	–	–	–	–	15.0

(1) 1.0 kgf = 2.2 lbf or 9.8 N. An asterisk (*) indicates a load rating measured at an rpm value that is less than the value listed for that column.

Axial Load Force Ratings (maximum radial load) for Non-brake Motors

Motor Cat. No. (1)	Maximum Speed rpm	Load (kgf) at Speed (rpm)														
		500 kgf	1000 kgf	1500 kgf	2000 kgf	2500 kgf	3000 kgf	3500 kgf	4000 kgf	4500 kgf	5000 kgf	6000 kgf	6500 kgf	7000 kgf	7500 kgf	8000 kgf
VPL-A0631E	4500	–	22.3	–	–	16.1 *	13.8	–	–	11.6	–	–	–	–	–	–
VPL-A0631M	7200	–	–	18.7	–	15.0	–	–	–	12.1 *	–	–	–	–	9.5 *	–
VPL-A0632F	4800	–	23.5	19.7	–	–	15.5 *	–	–	–	11.9 *	–	–	–	–	–
VPL-A0633C	3000	32.7	24.2	21.3 *	–	–	15.0	–	–	–	–	–	–	–	–	–
VPL-A0633F	4500	32.7	–	20.3	–	–	15.0	–	–	12.6	–	–	–	–	–	–
VPL-A0751E	4800	30.0	22.2	–	–	16.1 *	–	–	–	–	11.2 *	–	–	–	–	–
VPL-A0752C	3300	31.5	23.3	20.5 *	–	–	–	13.9 *	–	–	–	–	–	–	–	–
VPL-A0752E	4800	31.5	23.3	–	–	16.4 *	–	–	–	–	11.8 *	–	–	–	–	–
VPL-A0753C	3300	32.5	24.1	21.5 *	–	–	–	14.3 *	–	–	–	–	–	–	–	–
VPL-A0753E	4600	32.5	24.1	–	–	17.3 *	–	–	–	–	12.4 *	–	–	–	–	–
VPL-B0631T	8000	–	–	18.7	–	–	13.8	–	–	–	–	10.5 *	–	–	–	9.0
VPL-B0631U	8000	–	–	18.7	–	–	13.8	–	–	–	11.1	–	–	–	–	9.0
VPL-B0632F	4600	–	23.5	19.7	–	–	15.5 *	–	–	–	11.9 *	–	–	–	–	–
VPL-B0632T	8000	–	–	–	17.4	–	–	–	12.9	–	–	–	10.6	–	–	9.5
VPL-B0633M	6700	–	24.2	–	17.9	–	–	–	13.4 *	–	–	–	–	10.5 *	–	–
VPL-B0633T	8000	–	–	20.3	–	–	15.0	–	–	–	–	11.3 *	–	–	–	9.8
VPL-B0751M	8000	–	–	18.6	–	–	13.8	–	–	–	11.2 *	–	–	–	–	9.0
VPL-B0752E	4900	31.5	23.3	–	–	16.6 *	–	–	–	–	11.8 *	–	–	–	–	–
VPL-B0752F	7000	–	23.3	–	17.3	–	–	14.0 *	–	–	–	–	–	10.0	–	–
VPL-B0752M	8000	–	–	19.6	–	–	14.5	–	–	–	11.7 *	–	–	–	–	9.5
VPL-B0753E	4500	32.5	24.1	–	17.8	–	–	–	–	12.5	–	–	–	–	–	–
VPL-B0753F	6600	–	24.1	–	17.8	–	–	14.7 *	–	–	–	–	10.7	–	–	–
VPL-B0753M	8000	–	–	20.2	–	–	14.9	–	–	–	12.4 *	–	–	–	–	9.8

(1) 1.0 kgf = 2.2 lbf or 9.8 N. An asterisk (*) indicates a load rating measured at an rpm value that is less than the value listed for that column.

Axial Load Force Ratings (zero radial load) for Non-brake Motors

Motor Cat. No. (1)	Maximum Speed rpm	Load (kgf) at Speed (rpm)														
		500 kgf	1000 kgf	1500 kgf	2000 kgf	2500 kgf	3000 kgf	3500 kgf	4000 kgf	4500 kgf	5000 kgf	6000 kgf	6500 kgf	7000 kgf	7500 kgf	8000 kgf
VPL-A0631E	4500	–	27.5	–	–	19.9 *	17.1	–	–	14.3	–	–	–	–	–	–
VPL-A0631M	7200	–	–	23.0	–	18.5	–	–	–	14.9 *	–	–	–	–	11.7 *	–
VPL-A0632F	4800	–	27.5	23.0	–	–	18.1 *	–	–	–	13.9 *	–	–	–	–	–
VPL-A0633C	3000	37.1	27.5	24.1 *	–	–	17.1	–	–	–	–	–	–	–	–	–
VPL-A0633F	4500	37.1	–	23.0	–	–	17.1	–	–	14.3	–	–	–	–	–	–
VPL-A0751E	4800	37.1	27.5	–	–	19.9 *	–	–	–	–	13.9 *	–	–	–	–	–
VPL-A0752C	3300	37.1	27.5	24.1 *	–	–	–	16.4 *	–	–	–	–	–	–	–	–
VPL-A0752E	4800	37.1	27.5	–	–	19.3 *	–	–	–	–	13.9 *	–	–	–	–	–
VPL-A0753C	3300	37.1	27.5	24.5 *	–	–	–	16.4 *	–	–	–	–	–	–	–	–
VPL-A0753E	4600	37.1	27.5	–	–	19.7 *	–	–	–	–	14.2 *	–	–	–	–	–
VPL-B0631T	8000	–	–	23.0	–	–	17.1	–	–	–	–	12.9 *	–	–	–	11.1
VPL-B0631U	8000	–	–	23.0	–	–	17.1	–	–	–	13.7	–	–	–	–	11.1
VPL-B0632F	4600	–	27.5	23.0	–	–	18.1 *	–	–	–	13.9 *	–	–	–	–	–
VPL-B0632T	8000	–	–	–	20.3	–	–	–	15.1	–	–	–	12.4 *	–	–	11.1
VPL-B0633M	6700	–	27.5	–	20.3	–	–	–	15.2 *	–	–	–	–	11.9 *	–	–
VPL-B0633T	8000	–	–	23.0	–	–	17.1	–	–	–	–	12.8 *	–	–	–	11.1
VPL-B0751M	8000	–	–	23.0	–	–	17.1	–	–	–	13.9 *	–	–	–	–	11.1
VPL-B0752E	4900	37.1	27.5	–	–	19.5 *	–	–	–	–	13.9 *	–	–	–	–	–
VPL-B0752F	7000	–	27.5	–	20.3	–	–	16.5 *	–	–	–	–	–	11.8	–	–
VPL-B0752M	8000	–	–	23.0	–	–	17.1	–	–	–	13.8 *	–	–	–	–	11.1
VPL-B0753E	4500	37.1	27.5	–	20.3	–	–	–	–	14.3	–	–	–	–	–	–
VPL-B0753F	6600	–	27.5	–	20.3	–	–	16.8 *	–	–	–	–	12.2	–	–	–
VPL-B0753M	8000	–	–	23.0	–	–	17.1	–	–	–	14.2 *	–	–	–	–	11.1

(1) 1.0 kgf = 2.2 lbf or 9.8 N. An asterisk (*) indicates a load rating measured at an rpm value that is less than the value listed for that column.

Radial Load Force Ratings (maximum) for Brake Motors

Motor Cat. No. (1)	Maximum Speed rpm	Load (kgf) at Speed (rpm)														
		500 kgf	1000 kgf	1500 kgf	2000 kgf	2500 kgf	3000 kgf	3500 kgf	4000 kgf	4500 kgf	5000 kgf	6000 kgf	6500 kgf	7000 kgf	7500 kgf	8000 kgf
VPL-A0631E	4500	–	29.2	–	–	22.8 *	20.3	–	–	17.7	–	–	–	–	–	–
VPL-A0631M	7200	–	–	25.5	–	21.5	–	–	–	18.3 *	–	–	–	–	15.1 *	–
VPL-A0632F	4800	–	30.5	26.6	–	–	22.2 *	–	–	–	18.1 *	–	–	–	–	–
VPL-A0633C	3000	39.5	31.4	28.4 *	–	–	21.8	–	–	–	–	–	–	–	–	–
VPL-A0633F	4500	39.5	–	27.4	–	–	21.8	–	–	19.0	–	–	–	–	–	–
VPL-A0751E	4800	36.5	29.0	–	–	22.6 *	–	–	–	–	17.2 *	–	–	–	–	–
VPL-A0752C	3300	38.1	30.3	27.4	–	–	–	20.3 *	–	–	–	–	–	–	–	–
VPL-A0752E	4800	38.1	30.3	–	–	23.1 *	–	–	–	–	17.9 *	–	–	–	–	–
VPL-A0753C	3300	39.2	31.2	28.5 *	–	–	–	20.9 *	–	–	–	–	–	–	–	–
VPL-A0753E	4600	39.2	31.2	–	–	24.1 *	–	–	–	–	18.7 *	–	–	–	–	–
VPL-B0631T	8000	–	–	25.5	–	–	20.3	–	–	–	–	16.4 *	–	–	–	14.6
VPL-B0631U	8000	–	–	25.5	–	–	20.3	–	–	–	17.1	–	–	–	–	14.6
VPL-B0632F	4600	–	30.5	26.6	–	–	22.2 *	–	–	–	18.1 *	–	–	–	–	–
VPL-B0632T	8000	–	–	–	24.2	–	–	–	19.2	–	–	–	16.5 *	–	–	15.3
VPL-B0633M	6700	–	31.4	–	24.9	–	–	–	19.9 *	–	–	–	–	16.5 *	–	–
VPL-B0633T	8000	–	–	27.4	–	–	21.8	–	–	–	–	17.5 *	–	–	–	15.7
VPL-B0751M	8000	–	–	25.3	–	–	20.1	–	–	–	17.2 *	–	–	–	–	14.5
VPL-B0752E	4900	38.1	30.3	–	–	23.3 *	–	–	–	–	17.9 *	–	–	–	–	–
VPL-B0752F	7000	–	30.3	–	24.0	–	–	20.4 *	–	–	–	–	–	15.8	–	–
VPL-B0752M	8000	–	–	26.4	–	–	21.0	–	–	–	17.8 *	–	–	–	–	15.1
VPL-B0753E	4500	39.2	31.2	–	24.7	–	–	–	–	18.9	–	–	–	–	–	–
VPL-B0753F	6600	–	31.2	–	24.7	–	–	21.4 *	–	–	–	–	16.7	–	–	–
VPL-B0753M	8000	–	–	27.2	–	–	21.6	–	–	–	18.7 *	–	–	–	–	15.6

(1) 1.0 kgf = 2.2 lbf or 9.8 N. An asterisk (*) indicates a load rating measured at an rpm value that is less than the value listed for that column.

Axial Load Force Ratings (maximum radial load) for Brake Motors

Motor Cat. No. (1)	Maximum Speed rpm	Load (kgf) at Speed (rpm)														
		500 kgf	1000 kgf	1500 kgf	2000 kgf	2500 kgf	3000 kgf	3500 kgf	4000 kgf	4500 kgf	5000 kgf	6000 kgf	6500 kgf	7000 kgf	7500 kgf	8000 kgf
VPL-A0631E	4500	–	23.7	–	–	17.2 *	14.7	–	–	12.3	–	–	–	–	–	–
VPL-A0631M	7200	–	–	19.9	–	15.9	–	–	–	12.8	–	–	–	–	10.0 *	–
VPL-A0632F	4800	–	24.3	20.4	–	–	16.1 *	–	–	–	12.3 *	–	–	–	–	–
VPL-A0633C	3000	33.5	24.8	21.8 *	–	–	15.4	–	–	–	–	–	–	–	–	–
VPL-A0633F	4500	33.5	–	20.8	–	–	15.4	–	–	12.9	–	–	–	–	–	–
VPL-A0751E	4800	31.8	23.5	–	–	17.1 *	–	–	–	–	11.9 *	–	–	–	–	–
VPL-A0752C	3300	32.7	24.2	21.3 *	–		–	14.4 *	–	–	–	–	–	–	–	–
VPL-A0752E	4800	32.7	24.2	–	–	17.0 *	–	–	–	–	12.3 *	–	–	–	–	–
VPL-A0753C	3300	33.4	24.7	22.0 *	–		–	14.7 *	–	–	–	–	–	–	–	–
VPL-A0753E	4600	33.4	24.7	–	–	17.7 *	–	–	–	–	12.7 *	–	–	–	–	–
VPL-B0631T	8000	–	–	19.9	–	–	14.7	–	–	–	–	11.1 *	–	–	–	9.6
VPL-B0631U	8000	–	–	19.9	–	–	14.7	–	–	–	11.8	–	–	–	–	9.6
VPL-B0632F	4600	–	24.3	20.4	–	–	16.1 *	–	–	–	12.3 *	–	–	–	–	–
VPL-B0632T	8000	–	–	–	18.0	–	–	–	13.3	–	–	–	11.0 *	–	–	9.9
VPL-B0633M	6700	–	24.8	–	18.4	–	–	–	13.7 *	–	–	–	–	10.7 *	–	–
VPL-B0633T	8000	–	–	20.8	–	–	15.4	–	–	–	–	11.6 *	–	–	–	10.1
VPL-B0751M	8000	–	–	19.7	–	–	14.6	–	–	–	11.9 *	–	–	–	–	9.5
VPL-B0752E	4900	32.7	24.2	–	–	17.2 *	–	–	–	–	12.3 *	–	–	–	–	–
VPL-B0752F	7000	–	24.2	–	17.9	–	–	14.5 *	–	–	–	–	–	10.4	–	–
VPL-B0752M	8000	–	–	20.3	–	–	15.0	–	–	–	12.1 *	–	–	–	–	9.8
VPL-B0753E	4500	33.4	24.7	–	18.3	–	–	–	–	12.9	–	–	–	–	–	–
VPL-B0753F	6600	–	24.7	–	18.3	–	–	15.1 *	–	–	–	–	11.0	–	–	–
VPL-B0753M	8000	–	–	20.7	–	–	15.3	–	–	–	12.7 *	–	–	–	–	10.0

(1) 1.0 kgf = 2.2 lbf or 9.8 N. An asterisk (*) indicates a load rating measured at an rpm value that is less than the value listed for that column.

Axial Load Force Ratings (zero radial load) for Brake Motors

Motor Cat. No. (1)	Maximum Speed rpm	Load (kgf) at Speed (rpm)														
		500 kgf	1000 kgf	1500 kgf	2000 kgf	2500 kgf	3000 kgf	3500 kgf	4000 kgf	4500 kgf	5000 kgf	6000 kgf	6500 kgf	7000 kgf	7500 kgf	8000 kgf
VPL-A0631E	4500	–	27.5	–	–	19.9 *	17.1	–	–	14.3	–	–	–	–	–	–
VPL-A0631M	7200	–	–	23.0	–	18.5	–	–	–	14.9 *	–	–	–	–	11.7 *	–
VPL-A0632F	4800	–	27.5	23.0	–	–	18.1 *	–	–	–	13.9 *	–	–	–	–	–
VPL-A0633C	3000	37.1	27.5	24.1 *	–	–	17.1	–	–	–	–	–	–	–	–	–
VPL-A0633F	4500	37.1	–	23.0	–	–	17.1	–	–	14.3	–	–	–	–	–	–
VPL-A0751E	4800	37.1	27.5	–	–	19.9 *	–	–	–	–	13.9 *	–	–	–	–	–
VPL-A0752C	3300	37.1	27.5	24.1 *	–	–	–	16.4 *	–	–	–	–	–	–	–	–
VPL-A0752E	4800	37.1	27.5	–	–	19.3 *	–	–	–	–	13.9 *	–	–	–	–	–
VPL-A0753C	3300	37.1	27.5	24.5 *	–	–	–	16.4 *	–	–	–	–	–	–	–	–
VPL-A0753E	4600	37.1	27.5	–	–	19.7 *	–	–	–	–	14.2 *	–	–	–	–	–
VPL-B0631T	8000	–	–	23.0	–	–	17.1	–	–	–	–	12.9 *	–	–	–	11.1
VPL-B0631U	8000	–	–	23.0	–	–	17.1	–	–	–	13.7	–	–	–	–	11.1
VPL-B0632F	4600	–	27.5	23.0	–	–	18.1 *	–	–	–	13.9 *	–	–	–	–	–
VPL-B0632T	8000	–	–	–	20.3	–	–	–	15.1	–	–	–	12.4 *	–	–	11.1
VPL-B0633M	6700	–	27.5	–	20.3	–	–	–	15.2 *	–	–	–	–	11.9 *	–	–
VPL-B0633T	8000	–	–	23.0	–	–	17.1	–	–	–	–	12.8 *	–	–	–	11.1
VPL-B0751M	8000	–	–	23.0	–	–	17.1	–	–	–	13.9 *	–	–	–	–	11.1
VPL-B0752E	4900	37.1	27.5	–	–	19.5 *	–	–	–	–	13.9 *	–	–	–	–	–
VPL-B0752F	7000	–	27.5	–	20.3	–	–	16.5 *	–	–	–	–	–	11.8	–	–
VPL-B0752M	8000	–	–	23.0	–	–	17.1	–	–	–	13.8 *	–	–	–	–	11.1
VPL-B0753E	4500	37.1	27.5	–	20.3	–	–	–	–	14.3	–	–	–	–	–	–
VPL-B0753F	6600	–	27.5	–	20.3	–	–	16.8 *	–	–	–	–	12.2	–	–	–
VPL-B0753M	8000	–	–	23.0	–	–	17.1	–	–	–	14.2 *	–	–	–	–	11.1

(1) 1.0 kgf = 2.2 lbf or 9.8 N. An asterisk (*) indicates a load rating measured at an rpm value that is less than the value listed for that column.

Kinetix VPL Servo Motors (100...165 frame size)

Radial Load Force Ratings (maximum) for Non-brake Motors

Motor Cat. No. (1)	Maximum Speed rpm	Load (kgf) at Speed (rpm)														
		500 kgf	750 kgf	1000 kgf	1500 kgf	2000 kgf	2500 kgf	3000 kgf	3500 kgf	4000 kgf	4500 kgf	5000 kgf	5500 kgf	6000 kgf	6500 kgf	7000 kgf
VPL-A1001C	2800	79.1	–	62.8	–	49.8	–	44.6 *	–	–	–	–	–	–	–	–
VPL-A1001M	6500	–	–	–	54.9	–	46.3	–	–	–	38.0	–	–	–	33.6	–
VPL-A1002C	3000	87.9	–	69.7	–	55.4	–	48.4	–	–	–	–	–	–	–	–
VPL-A1002F	5000	–	–	69.7	60.9	–	–	48.4	–	–	–	40.8	–	–	–	–
VPL-A1003C	2250	93.6	–	74.3	64.9	–	56.7 *	–	–	–	–	–	–	–	–	–
VPL-A1003E	3750	93.6	–	74.3	–	59.0	–	–	–	47.8 *	–	–	–	–	–	–
VPL-A1003F	5500	–	–	–	64.9	–	54.8	–	–	46.8	–	–	42.1	–	–	–
VPL-A1152B	2150	98.8	–	78.4	68.5	–	60.8 *	–	–	–	–	–	–	–	–	–
VPL-A1152E	3300	98.8	–	78.4	–	62.2	–	–	52.7 *	–	–	–	–	–	–	–
VPL-A1152F	5000	–	–	78.4	–	62.2	–	54.4	–	–	–	45.9	–	–	–	–
VPL-A1153C	2300	106.4	–	84.5	73.8	–	64.0 *	–	–	–	–	–	–	–	–	–
VPL-A1303B	1950	132.9	–	105.5	92.2	84.4 *	–	–	–	–	–	–	–	–	–	–
VPL-A1303F	4000	–	–	105.5	–	83.7	–	73.1	–	66.5		–	–	–	–	–
VPL-A1304A	1600	140.2	122.5	112.2 *	–	95.2 *	–	–	–	–	–	–	–	–	–	–
VPL-A1304D	3000	140.2	–	111.3	–	88.3	–	77.2	–	–	–	–	–	–	–	–
VPL-A1306C	2000	150.0	–	128.3 *	107.7 *	94.5	–	–	–	–	–	–	–	–	–	–
VPL-B1001M	6000	–	–	–	–	49.8	–	43.5	–	39.6	–	–	–	34.6	–	–
VPL-B1002E	3300	87.9	–	69.7	–	55.4	–	–	46.8 *	–	–	–	–	–	–	–
VPL-B1002M	6000	–	–	–	60.9	–	–	48.4	–	–	42.2	–	–	38.4	–	–
VPL-B1003C	2500	93.6	–	74.3	64.9	–	54.8	–	–	–	–	–	–	–	–	–
VPL-B1003F	4750	–	–	74.3	64.9	–	–	51.5	–	–	–	44.2 *	–	–	–	–
VPL-B1003T	7000	–	–	–	64.9	–	54.8	–	–	–	45.0	–	–	–	–	38.9
VPL-B1152C	2250	98.8	–	78.4	68.5	–	59.8 *	–	–	–	–	–	–	–	–	–
VPL-B1152F	4000	–	–	78.4	–	62.2		54.4	–	–	47.5	–	–	–	–	–
VPL-B1152T	6500	–	–	–	68.5	–	57.8	–	–	49.4	–	–	–	–	42.0	–
VPL-B1153E	3200	106.4	–	84.5	–	67.0	–	–	57.3 *	–	–	–	–	–	–	–
VPL-B1153F	5000	–	–	84.5	–	67.0	–	58.6	–	–	–	49.4	–	–	–	–
VPL-B1303C	2250	132.9	–	105.5	92.2	–	80.5 *	–	–	–	–	–	–	–	–	–
VPL-B1303F	4000	–	–	105.5	–	83.7	–	74.0 *	–	66.5	–	–	–	–	–	–
VPL-B1304C	2150	140.2	–	111.3	99.5 *	–	86.2 *	–	–	–	–	–	–	–	–	–
VPL-B1304E	3500	–	–	111.3	97.2	–	84.3 *	–	73.3	–	–	–	–	–	–	–
VPL-B1306C	2500	150.0	–	119.1	–	100.8 *	87.7	–	–	–	–	–	–	–	–	–
VPL-B1306F	4250	–	–	119.0	–	94.5	–	82.6	–	–	73.5 *	–	–	–	–	–
VPL-B1651C	2750	161.3	–	128.0	–	108.3 *	–	91.4 *	–	–	–	–	–	–	–	–
VPL-B1651F	4750	–	–	128.0	–	101.6	–	88.7	–	–	–	76.1 *	–	–	–	–
VPL-B1652C	2700	180.7	–	143.4	125.3	–	–	103.0 *	–	–	–	–	–	–	–	–
VPL-B1652F	4000	–	–	143.4	125.3		105.7	–	–	90.4	–	–	–	–	–	–
VPL-B1653C	2300	192.4	–	152.7	136.5 *	–	115.7 *	–	–	–	–	–	–	–	–	–
VPL-B1653D	3000	–	–	152.7	139.9 *	125.5 *	–	105.9	–	–	–	–	–	–	–	–
VPL-B1654B	1850	200.1	174.8	–	152.5 *	129.4 *	–	–	–	–	–	–	–	–	–	–
VPL-B1654D	3000	–	–	158.8	138.8	126.1	–	110.1	–	–	–	–	–	–	–	–

(1) 1.0 kgf = 2.2 lbf or 9.8 N. An asterisk (*) indicates a load rating measured at an rpm value that is less than the value listed for that column.

Axial Load Force Ratings (maximum radial load) for Non-brake Motors

Motor Cat. No. (1)	Maximum Speed rpm	Load (kgf) at Speed (rpm)														
		500 kgf	750 kgf	1000 kgf	1500 kgf	2000 kgf	2500 kgf	3000 kgf	3500 kgf	4000 kgf	4500 kgf	5000 kgf	5500 kgf	6000 kgf	6500 kgf	7000 kgf
VPL-A1001C	2800	25.0	–	19.0	–	10.0	–	10.0 *	–	–	–	–	–	–	–	–
VPL-A1001M	6500	–	–	–	15.0	–	12.0	–	–	–	9.0	–	–	–	8.0	–
VPL-A1002C	3000	30.0	–	22.0	–	16.0	–	13.0	–	–	–	–	–	–	–	–
VPL-A1002F	5000	–	–	22.0	18.0	–	–	13.0	–	–	–	11.0	–	–	–	–
VPL-A1003C	2250	33.0	–	24.0	20.0	–	17.0 *	–	–	–	–	–	–	–	–	–
VPL-A1003E	3750	33.0	–	24.0	–	18.0	–	–	–	13.0 *	–	–	–	–	–	–
VPL-A1003F	5500	–	–	–	20.0	–	16.0	–	–	13.0	–	–	11.0	–	–	–
VPL-A1152B	2150	44.0	–	32.0	27.0	–	23.0 *	–	–	–	–	–	–	–	–	–
VPL-A1152E	3300	44.0	–	32.0	–	24.0	–	–	15.0 *	–	–	–	–	–	–	–
VPL-A1152F	5000	–	–	32.0	–	24.0	–	20.0	–	–	–	16.0	–	–	–	–
VPL-A1153C	2300	48.0	–	35.0	29.0	–	24.0 *	–	–	–	–	–	–	–	–	–
VPL-A1303B	1950	39.0	–	29.0	24.0	22.0 *	–	–	–	–	–	–	–	–	–	–
VPL-A1303F	4000	–	–	29.0	–	21.0	–	18.0	–	16.0	–	–	–	–	–	–
VPL-A1304A	1600	43.0	36.0	32.0 *	–	26.0 *	–	–	–	–	–	–	–	–	–	–
VPL-A1304D	3000	43.0	–	32.0	–	23.0	–	20.0	–	–	–	–	–	–	–	–
VPL-A1306C	2000	48.0	–	39.0 *	31.0 *	26.0	–	–	–	–	–	–	–	–	–	–
VPL-B1001M	6000	–	–	–	–	14.0	–	11.0	–	10.0	–	–	–	8.0	–	–
VPL-B1002E	3300	30.0	–	22.0	–	16.0	–	–	13.0 *	–	–	–	–	–	–	–
VPL-B1002M	6000	–	–	–	18.0	–	–	13.0	–	–	11.0	–	–	10.0	–	–
VPL-B1003C	2500	33.0	–	24.0	20.0	–	16.0	–	–	–	–	–	–	–	–	–
VPL-B1003F	4750	–	–	24.0	20.0	–	–	15.0	–	–	–	12.0 *	–	–	–	–
VPL-B1003T	7000	–	–	–	20.0	–	16.0	–	–	–	12.0	–	–	–	–	10.0
VPL-B1152C	2250	44.0	–	32.0	27.0	–	22.0 *	–	–	–	–	–	–	–	–	–
VPL-B1152F	4000	–	–	32.0	–	24.0	–	20.0	–	–	17.0	–	–	–	–	–
VPL-B1152T	6500	–	–	–	27.0	–	21.0	–	–	17.0	–	–	–	–	14.0	–
VPL-B1153E	3200	48.0	–	35.0	–	26.0	–	–	21.0 *	–	–	–	–	–	–	–
VPL-B1153F	5000	–	–	35.0	–	26.0	–	22.0	–	–	–	17.0	–	–	–	–
VPL-B1303C	2250	39.0	–	29.0	–	24.0	20.0 *	–	–	–	–	–	–	–	–	–
VPL-B1303F	4000	–	–	29.0	–	21.0	–	18.0 *	–	16.0	–	–	–	–	–	–
VPL-B1304C	2150	43.0	–	32.0	27.0 *	–	23.0 *	–	–	–	–	–	–	–	–	–
VPL-B1304E	3500	–	–	32.0	27.0	–	22.0 *	–	18.0	–	–	–	–	–	–	–
VPL-B1306C	2500	48.0	–	36.0	–	29.0 *	24.0	–	–	–	–	–	–	–	–	–
VPL-B1306F	4250	–	–	36.0	–	26.0	–	22.0	–	–	19.0 *	–	–	–	–	–
VPL-B1651C	2750	48.0	–	35.0	–	28.0 *	–	23.0 *	–	–	–	–	–	–	–	–
VPL-B1651F	4750	–	–	35.0	–	26.0	–	22.0	–	–	–	18.0 *	–	–	–	–
VPL-B1652C	2700	58.0	–	43.0	36.0	–	–	27.0 *	–	–	–	–	–	–	–	–
VPL-B1652F	4000	–	–	43.1	36.1	–	28.9	–	–	23.6	–	–	–	–	–	–
VPL-B1653C	2300	64.0	–	47.0	41.0 *	–	33.0 *	–	–	–	–	–	–	–	–	–
VPL-B1653D	3000	–	–	47.6	42.5 *	36.9 *	–	29.5	–	–	–	–	–	–	–	–
VPL-B1654B	1850	68.0	–	57.0	48.0 *	38.0 *	–	–	–	–	–	–	–	–	–	–
VPL-B1654D	3000	–	–	50.7	42.5	37.5	–	31.5	–	–	–	–	–	–	–	–

(1) 1.0 kgf = 2.2 lbf or 9.8 N. An asterisk (*) indicates a load rating measured at an rpm value that is less than the value listed for that column.

Axial Load Force Ratings (zero radial load) for Non-brake Motors

Motor Cat. No. (1)	Maximum Speed rpm	Load (kgf) at Speed (rpm)														
		500 kgf	750 kgf	1000 kgf	1500 kgf	2000 kgf	2500 kgf	3000 kgf	3500 kgf	4000 kgf	4500 kgf	5000 kgf	5500 kgf	6000 kgf	6500 kgf	7000 kgf
VPL-A1001C	2800	49.4	–	36.5	–	27.0	–	23.4 *	–	–	–	–	–	–	–	–
VPL-A1001M	6500	–	–	–	30.6	–	24.5	–	–	–	19.0	–	–	–	16.2	–
VPL-A1002C	3000	49.4	–	36.5	–	27.0	–	22.7	–	–	–	–	–	–	–	–
VPL-A1002F	5000	–	–	36.5	30.6	–	–	22.7	–	–	–	18.2	–	–	–	–
VPL-A1003C	2250	49.4	–	36.5	30.6	–	25.7 *	–	–	–	–	–	–	–	–	–
VPL-A1003E	3750	49.4	–	36.5	–	27.0	–	–	–	20.6 *	–	–	–	–	–	–
VPL-A1003F	5500	–	–	–	30.6	–	24.5	–	–	20.0	–	–	17.4	–	–	–
VPL-A1152B	2150	68.3	–	50.5	42.4	–	36.0 *	–	–	–	–	–	–	–	–	–
VPL-A1152E	3300	68.3	–	50.5	–	37.4	–	–	30.1 *	–	–	–	–	–	–	–
VPL-A1152F	5000	–	–	50.5	–	37.4	–	31.4	–	–	–	25.1	–	–	–	–
VPL-A1153C	2300	68.3	–	50.5	42.4		35.2 *	–	–	–	–	–	–	–	–	–
VPL-A1303B	1950	68.3	–	50.5	42.4	37.8 *	–	–	–	–	–	–	–	–	–	–
VPL-A1303F	4000	–	–	50.5	–	37.4	–	31.4	–	27.7	–	–	–	–	–	–
VPL-A1304A	1600	68.3	57.2	51.1 *	–	41.2 *	–	–	–	–	–	–	–	–	–	–
VPL-A1304D	3000	68.3	–	50.5	–	37.4	–	31.4	–	–	–	–	–	–	–	–
VPL-A1306C	2000	68.3	–	55.7 *	44.3 *	37.4	–	–	–	–	–	–	–	–	–	–
VPL-B1001M	6000	–	–	–	–	27.0	–	22.7	–	20.0	–	–	–	16.8	–	–
VPL-B1002E	3300	49.4	–	36.5	–	27.0	–	–	21.8 *	–	–	–	–		–	–
VPL-B1002M	6000	–	–	–	30.6	–	–	22.7	–	–	19.0	–	–	16.8	–	–
VPL-B1003C	2500	49.4	–	36.5	30.6	–	24.5	–	–	–	–	–	–	–	–	–
VPL-B1003F	4750	–	–	36.5	30.6	–	–	22.7	–	–	–	18.6 *	–	–	–	–
VPL-B1003T	7000	–	–	–	30.6	–	24.5	–	–	–	19.0	–	–	–	–	15.7
VPL-B1152C	2250	68.3	–	50.5	42.4	–	35.5 *	–	–	–	–	–	–	–	–	–
VPL-B1152F	4000	–	–	50.5	–	37.4	–	31.4	–	–	26.3	–	–	–	–	–
VPL-B1152T	6500	–	–	–	42.4	–	33.9	–	–	27.7	–	–	–	–	22.4	–
VPL-B1153E	3200	68.3	–	50.5	–	37.4	–	–	30.5 *	–	–	–	–	–	–	–
VPL-B1153F	5000	–	–	50.5	–	37.4	–	31.4	–	–	–	25.1	–	–	–	–
VPL-B1303C	2250	68.3	–	50.5	42.3	–	35.5 *	–	–	–	–	–	–	–	–	–
VPL-B1303F	4000	–	–	50.5	–	37.4	–	31.8 *	–	27.7	–	–	–	–	–	–
VPL-B1304C	2150	68.3	–	50.5	43.6 *	–	36.2 *	–	–	–	–	–	–	–	–	–
VPL-B1304E	3500	–	–	50.5	42.4	–	35.2 *	–	29.3	–	–	–	–	–	–	–
VPL-B1306C	2500	68.3	–	50.5	–	40.6 *	33.9	–	–	–	–	–	–	–	–	–
VPL-B1306F	4250	–	–	50.5	–	37.4	–	31.4	–	–	27.0 *	–	–	–	–	–
VPL-B1651C	2750	90.1	–	66.7	–	53.7 *	–	43.0 *	–	–	–	–	–	–	–	–
VPL-B1651F	4750	–	–	66.7	–	49.4	–	41.4	–	–	–	33.9 *	–	–	–	–
VPL-B1652C	2700	90.1	–	66.7	55.9	–	–	43.3 *	–	–	–	–	–	–	–	–
VPL-B1652F	4000	–	–	66.7	55.9	–	44.8	–	–	36.5	–	–	–	–	–	–
VPL-B1653C	2300	90.1	–	66.7	57.6 *	–	46.4 *	–	–	–	–	–	–	–	–	–
VPL-B1653D	3000	–	–	66.7	59.5 *	51.7 *	–	41.4	–	–	–	–	–	–	–	–
VPL-B1654B	1850	90.1	75.6	–	63.2 *	51.1 *	–	–	–	–	–	–	–	–	–	–
VPL-B1654D	3000	–	–	66.7	55.9	49.4	–	41.4	–	–	–	–	–	–	–	–

(1) 1.0 kgf = 2.2 lbf or 9.8 N. An asterisk (*) indicates a load rating measured at an rpm value that is less than the value listed for that column.

Radial Load Force Ratings (maximum) for Brake Motors

Motor Cat. No. (1)	Maximum Speed rpm	Load (kgf) at Speed (rpm)														
		500 kgf	750 kgf	1000 kgf	1500 kgf	2000 kgf	2500 kgf	3000 kgf	3500 kgf	4000 kgf	4500 kgf	5000 kgf	5500 kgf	6000 kgf	6500 kgf	7000 kgf
VPL-A1001C	2800	90.2	–	71.6	–	56.8	–	50.8 *	–	–	–	–	–	–	–	–
VPL-A1001M	6500	–	–	–	62.5	–	52.7	–	–	–	43.4	–	–	–	38.4	–
VPL-A1002C	3000	95.3	–	75.6	–	60.0	–	52.4	–	–	–	–	–	–	–	–
VPL-A1002F	5000	–	–	75.6	66.1	–	–	52.4	–	–	–	44.2	–	–	–	–
VPL-A1003C	2250	99.0	–	78.5	68.6	–	59.9 *	–	–	–	–	–	–	–	–	–
VPL-A1003E	3750	99.0	–	78.5	–	62.3	–	–	–	50.6 *	–	–	–	–	–	–
VPL-A1003F	5500	–	–	–	68.6	–	57.9	–	–	49.5	–	–	44.5	–	–	–
VPL-A1152B	2150	111.3	–	88.4	77.2	–	68.5 *	–	–	–	–	–	–	–	–	–
VPL-A1152E	3300	111.3	–	88.4	–	70.1	–	–	59.4 *	–	–	–	–	–	–	–
VPL-A1152F	5000	–	–	88.4	–	70.1	–	61.3	–	–	–	51.7	–	–	–	–
VPL-A1153C	2300	115.4	–	91.6	80.0	–	69.4 *	–	–	–	–	–	–	–	–	–
VPL-A1303B	1950	145.3	–	115.3	100.7	92.3 *	–	–	–	–	–	–	–	–	–	–
VPL-A1303F	4000	–	–	115.3	–	91.5	–	80.0	–	72.7	–	–	–	–	–	–
VPL-A1304A	1600	149.7	130.8	119.8 *	–	101.6 *	–	–	–	–	–	–	–	–	–	–
VPL-A1304D	3000	149.5	–	118.6	–	94.2	–	82.3	–	–	–	–	–	–	–	–
VPL-A1306C	2000	156.0	–	133.4 *	112.1 *	98.3	–	–	–	–	–	–	–	–	–	–
VPL-B1001M	6000	–	–	–	–	56.8	–	49.6	–	45.1	–	–	–	39.4	–	–
VPL-B1002E	3300	95.3	–	75.6	–	60.0	–	–	50.8 *	–	–	–	–	–	–	–
VPL-B1002M	6000	–	–	–	66.1	–	–	52.4	–	–	45.8	–	–	41.6	–	–
VPL-B1003C	2500	99.0	–	78.5	68.6	–	57.9	–	–	–	–	–	–	–	–	–
VPL-B1003F	4750	–	–	78.5	68.6	–		54.5	–	–	–	46.7 *	–	–	–	–
VPL-B1003T	7000	–	–	–	68.6	–	57.9	–	–	–	47.6	–	–	–	–	41.1
VPL-B1152C	2250	111.3	–	88.4	77.2	–	67.4 *	–	–	–	–	–	–	–	–	–
VPL-B1152F	4000	–	–	88.4	–	70.1	–	61.3	–	–	53.5	–	–	–	–	–
VPL-B1152T	6500	–	–	–	77.2	–	65.1	–	–	55.7	–	–	–	–	47.4	–
VPL-B1153E	3200	115.4	–	91.6	–	72.7	–	–	62.2 *	–	–	–	–	–	–	–
VPL-B1153F	5000	–	–	91.6	–	72.7	–	63.5	–	–	–	53.6	–	–	–	–
VPL-B1303C	2250	145.3	–	115.3	100.7	–	88.0 *	–	–	–	–	–	–	–	–	–
VPL-B1303F	4000	–	–	115.3	–	91.5	–	80.9 *	–	72.7	–	–	–	–	–	–
VPL-B1304C	2150	149.7	–	118.8	106.2 *	–	92.0 *	–	–	–	–	–	–	–	–	–
VPL-B1304E	3500	–	–	118.8	103.8	–	90.0 *	–	78.2	–	–	–	–	–	–	–
VPL-B1306C	2500	156.0	–	123.8	–	104.8 *	91.2	–	–	–	–	–	–	–	–	–
VPL-B1306F	4250	–	–	123.8	–	98.3	–	85.9	–	–	76.5 *	–	–	–	–	–
VPL-B1651C	2750	180.9	–	143.6	–	121.5 *	–	102.5 *	–	–	–	–	–	–	–	–
VPL-B1651F	4750	–	–	143.6	–	114.0	–	99.6	–	–	–	85.4 *	–	–	–	–
VPL-B1652C	2700	192.5	–	152.8	133.5	–	–	109.7 *	–	–	–	–	–	–	–	–
VPL-B1652F	4000	–	–	152.8	133.5	–	112.6	–	–	96.3	–	–	–	–	–	–
VPL-B1653C	2300	200.2	–	158.9	142.1 *	–	120.4 *	–	–	–	–	–	–	–	–	–
VPL-B1653D	3000	–	–	158.9	145.6 *	130.6 *	–	110.2	–	–	–	–	–	–	–	–
VPL-B1654B	1850	205.7	179.7	–	156.8 *	133.0 *	–	–	–	–	–	–	–	–	–	–
VPL-B1654D	3000	–	–	163.3	142.7	129.6	–	113.2	–	–	–	–	–	–	–	–

(1) 1.0 kgf = 2.2 lbf or 9.8 N. An asterisk (*) indicates a load rating measured at an rpm value that is less than the value listed for that column.

Axial Load Force Ratings (maximum radial load) for Brake Motors

Motor Cat. No. (1)	Maximum Speed rpm	Load (kgf) at Speed (rpm)														
		500 kgf	750 kgf	1000 kgf	1500 kgf	2000 kgf	2500 kgf	3000 kgf	3500 kgf	4000 kgf	4500 kgf	5000 kgf	5500 kgf	6000 kgf	6500 kgf	7000 kgf
VPL-A1001C	2800	31.0	–	23.0	–	17.0	–	14.0 *	–	–	–	–	–	–	–	–
VPL-A1001M	6500	–	–	–	19.0	–	15.0	–	–	–	12.0	–	–	–	10.0	–
VPL-A1002C	3000	34.0	–	25.0	–	18.0	–	15.0	–	–	–	–	–	–	–	–
VPL-A1002F	5000	–	–	25.0	21.0	–	–	15.0	–	–	–	12.0	–	–	–	–
VPL-A1003C	2250	36.0	–	26.0	22.0	–	18.0 *	–	–	–	–	–	–	–	–	–
VPL-A1003E	3750	36.0	–	26.0	–	19.0	–	–	–	15.0 *	–	–	–	–	–	–
VPL-A1003F	5500	–	–	–	22.0	–	18.0	–	–	14.0	–	–	12.0	–	–	–
VPL-A1152B	2150	50.0	–	37.0	31.0	–	26.0 *	–	–	–	–	–	–	–	–	–
VPL-A1152E	3300	51.0	–	37.0	–	27.0	–	–	22.0 *	–	–	–	–	–	–	–
VPL-A1152F	5000	–	–	37.0	–	27.0	–	23.0	–	–	–	18.0	–	–	–	–
VPL-A1153C	2300	53.0	–	39.0	32.0	–	27.0 *	–	–	–	–	–	–	–	–	–
VPL-A1303B	1950	46.0	–	34.0	28.0	25.0 *	–	–	–	–	–	–	–	–	–	–
VPL-A1303F	4000	–	–	34.0	–	25.0	–	21.0	–	18.0	–	–	–	–	–	–
VPL-A1304A	1600	48.0	40.0	36.0 *	–	29.0 *	–	–	–	–	–	–	–	–	–	–
VPL-A1304D	3000	48.0	–	36.0	–	26.0	–	22.0	–	–	–	–	–	–	–	–
VPL-A1306C	2000	52.0	–	42.0 *	33.3 *	28.0	–	–	–	–	–	–	–	–	–	–
VPL-B1001M	6000	–	–	–	–	17.0	–	14.0	–	12.0	–	–	–	10.0	–	–
VPL-B1002E	3300	34.0	–	25.0	–	18.0	–	–	15.0 *	–	–	–	–	–	–	–
VPL-B1002M	6000	–	–	–	21.0	–	–	15.0	–	–	13.0	–	–	11.0	–	–
VPL-B1003C	2500	36.0	–	26.0	22.0	–	18.0	–	–	–	–	–	–	–	–	–
VPL-B1003F	4750	–	–	26.0	22.0	–	–	16.0	–	–	–	13.0 *	–	–	–	–
VPL-B1003T	7000	–	–	–	22.0	–	18.0	–	–	–	13.0	–	–	–	–	11.0
VPL-B1152C	2250	51.0	–	37.0	31.0	–	26.0 *	–	–	–	–	–	–	–	–	–
VPL-B1152F	4000	–	–	37.0	–	27.0	–	23.0	–	–	19.0	–	–	–	–	–
VPL-B1152T	6500	–	–	–	31.0	–	25.0	–	–	20.0	–	–	–	–	16.0	–
VPL-B1153E	3200	53.0	–	39.0	–	29.0	–	–	23.0*	–	–	–	–	–	–	–
VPL-B1153F	5000	–	–	39.0	–	29.0	–	24.0	–	–	–	19.0	–	–	–	–
VPL-B1303C	2250	46.0	–	34.0	28.0	–	24.0 *	–	–	–	–	–	–	–	–	–
VPL-B1303F	4000	–	–	34.0	–	25.0	–	21.0 *	–	18.0	–	–	–	–	–	–
VPL-B1304C	2150	48.0	–	36.0	31.0 *	–	25.0 *	–	–	–	–	–	–	–	–	–
VPL-B1304E	3500	–	–	36.0	30.0	–	25.0 *	–	20.0	–	–	–	–	–	–	–
VPL-B1306C	2500	52.0	–	38.0	–	31.0 *	25.0	–	–	–	–	–	–	–	–	–
VPL-B1306F	4250	–	–	38.0	–	28.0	–	24.0	–	–	20.0 *	–	–	–	–	–
VPL-B1651C	2750	58.0	–	43.0	–	34.0 *	–	27.0 *	–	–	–	–	–	–	–	–
VPL-B1651F	4750	–	–	43.0	–	31.0	–	26.0	–	–	–	21.0 *	–	–	–	–
VPL-B1652C	2700	64.0	–	47.0	39.0	–	–	30.0 *	–	–	–	–	–	–	–	–
VPL-B1652F	4000	–	–	47.6	40.0	–	32.0	–	–	26.1	–	–	–	–	–	–
VPL-B1653C	2300	68.0	–	50.0	43.0 *	–	35.0 *	–	–	–	–	–	–	–	–	–
VPL-B1653D	3000	–	–	50.7	45.3 *	39.3 *	–	31.5	–	–	–	–	–	–	–	–
VPL-B1654B	1850	71.0	59.0	–	50.0 *	40.0 *	–	–	–	–	–	–	–	–	–	–
VPL-B1654D	3000	–	–	52.9	44.4	39.2	–	32.9	–	–	–	–	–	–	–	–

(1) 1.0 kgf = 2.2 lbf or 9.8 N. An asterisk (*) indicates a load rating measured at an rpm value that is less than the value listed for that column.

Axial Load Force Ratings (zero radial load) for Brake Motors

Motor Cat. No. (1)	Maximum Speed rpm	Load (kgf) at Speed (rpm)														
		500 kgf	750 kgf	1000 kgf	1500 kgf	2000 kgf	2500 kgf	3000 kgf	3500 kgf	4000 kgf	4500 kgf	5000 kgf	5500 kgf	6000 kgf	6500 kgf	7000 kgf
VPL-A1001C	2800	49.4	–	36.5	–	27.0	–	23.4 *	–	–	–	–	–	–	–	–
VPL-A1001M	6500	–	–	–	30.6	–	24.5	–	–	–	19.0	–	–	–	16.2	–
VPL-A1002C	3000	49.4	–	36.5	–	27.0	–	22.7	–	–	–	–	–	–	–	–
VPL-A1002F	5000	–	–	36.5	30.6	–	–	22.7	–	–	–	18.2	–	–	–	–
VPL-A1003C	2250	49.4	–	36.5	30.6	–	25.7 *	–	–	–	–	–	–	–	–	–
VPL-A1003E	3750	49.4	–	36.5	–	27.0	–	–	–	20.6 *	–	–	–	–	–	–
VPL-A1003F	5500	–	–		30.6	–	24.5	–	–	20.0	–	–	17.4	–	–	–
VPL-A1152B	2150	68.3	–	50.5	42.4	–	36.2 *	–	–	–	–	–	–	–	–	–
VPL-A1152E	3300	68.3	–	50.5	–	37.4	–	–	30.1 *	–	–	–	–	–	–	–
VPL-A1152F	5000	–	–	50.5	–	37.4	–	31.4	–	–	–	25.1	–	–	–	–
VPL-A1153C	2300	68.3	–	50.5	42.4	–	35.2 *	–	–	–	–	–	–	–	–	–
VPL-A1303B	1950	68.3	–	50.5	42.4	37.8 *	–	–	–	–	–	–	–	–	–	–
VPL-A1303F	4000	–	–	50.5	–	37.4	–	31.4	–	27.7	–	–	–	–	–	–
VPL-A1304A	1600	68.3	57.2	51.1 *	–	41.2 *	–	–	–	–	–	–	–	–	–	–
VPL-A1304D	3000	68.3	–	50.5	–	37.4	–	31.4	–	–	–	–	–	–	–	–
VPL-A1306C	2000	68.3	–	55.7 *	44.3	37.4	–	–	–	–	–	–	–	–	–	–
VPL-B1001M	6000	–	–	–	–	27.0	–	22.7	–	20.0	–	–	–	16.8	–	–
VPL-B1002E	3300	49.4	–	36.5	–	27.0	–	–	21.8 *	–	–	–	–	–	–	–
VPL-B1002M	6000	–	–	–	30.6	–	–	22.7	–	–	19.0	–	–	16.8	–	–
VPL-B1003C	2500	49.4	–	36.5	30.6	–	24.5	–	–	–	–	–	–	–	–	–
VPL-B1003F	4750	–	–	36.5	30.6	–	–	22.7	–	–	–	18.6 *	–	–	–	–
VPL-B1003T	7000	–	–	–	30.6	–	24.5	–	–	–	19.0	–	–	–	–	15.7
VPL-B1152C	2250	68.3	–	50.5	42.4	–	35.5 *	–	–	–		–	–	–	–	–
VPL-B1152F	4000	–	–	50.5	–	37.4	–	31.4	–	–	26.3	–	–	–	–	–
VPL-B1152T	6500	–	–	–	42.4	–	33.9	–	–	27.7	–	–	–	–	22.4	–
VPL-B1153E	3200	68.3	–	50.5	–	37.4	–	–	30.5 *	–	–	–	–	–	–	–
VPL-B1153F	5000	–	–	50.5	–	37.4	–	31.4	–	–	–	25.1	–	–	–	–
VPL-B1303C	2250	68.3	–	50.5	42.4	–	35.5 *	–	–	–	–	–	–	–	–	–
VPL-B1303F	4000	–	–	50.5	–	37.4	–	31.8 *	–	27.7	–	–	–	–	–	–
VPL-B1304C	2150	68.3	–	50.5	43.6 *	–	36.2 *	–	–	–	–	–	–	–	–	–
VPL-B1304E	3500	–	–	50.5	42.4	–	35.2 *	–	29.3	–	–	–	–	–	–	–
VPL-B1306C	2500	68.3	–	50.5	–	40.6 *	33.9	–	–	–	–	–	–	–	–	–
VPL-B1306F	4250	–	–	50.5	–	37.4	–	31.4	–	–	27.0 *	–	–	–	–	–
VPL-B1651C	2750	90.1	–	66.7	–	53.7	–	43.0 *	–	–	–	–	–	–	–	–
VPL-B1651F	4750	–	–	66.7	–	49.4	–	41.4	–	–	–	33.9 *	–	–	–	–
VPL-B1652C	2700	90.1	–	66.7	55.9	–	–	43.3 *	–	–	–	–	–	–	–	–
VPL-B1652F	4000	–	–	66.7	55.9	–	44.8	–	–	36.5	–	–	–	–	–	–
VPL-B1653C	2300	90.1	–	66.7	57.6 *	–	46.4 *	–	–	–	–	–	–	–	–	–
VPL-B1653D	3000	–	–	66.7	59.5 *	51.7 *	–	41.4	–	–	–	–	–	–	–	–
VPL-B1654B	1850	90.1	75.6	–	63.2 *	51.1 *	–	–	–	–	–	–	–	–	–	–
VPL-B1654D	3000	–	–	66.7	55.9	49.4	–	41.4	–	–	–	–	–	–	–	–

(1) 1.0 kgf = 2.2 lbf or 9.8 N. An asterisk (*) indicates a load rating measured at an rpm value that is less than the value listed for that column.

Dimensions - Kinetix VPL Servo Motors

VPL-A/B063*xx* and VPL-A/B075*xx* Motor Dimensions

Dimensions are in mm (in.)

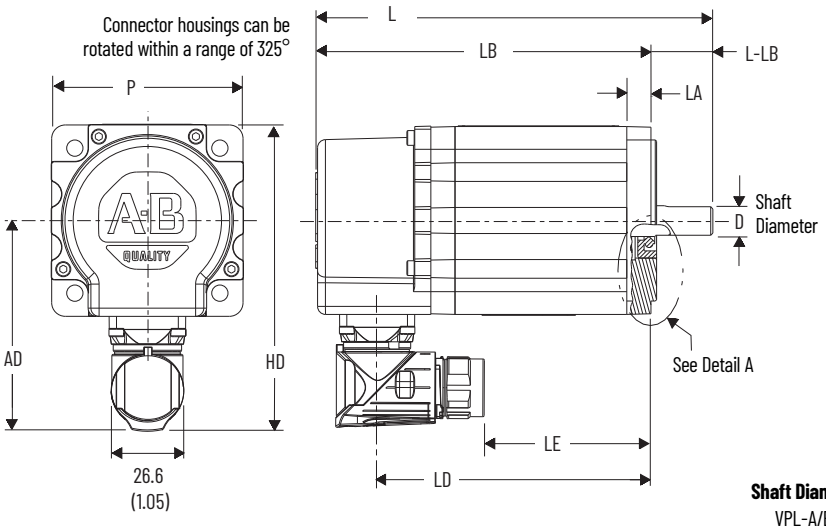

Pilot Diameter Tolerances

VPL-A/B063*xx* Motors:
Ø 39.995...40.011 (1.5746...1.5752)
VPL-A/B075*xx* Motors:
Ø 59.993...60.012 (2.3619...2.3627)

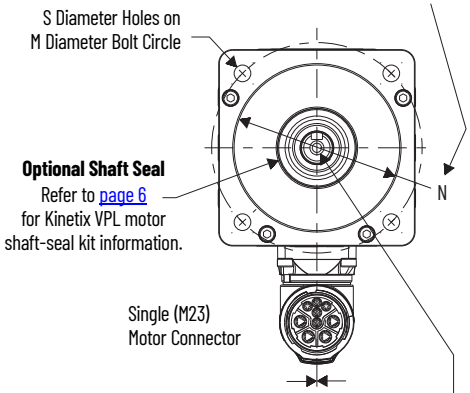

Shaft Diameter Tolerances

VPL-A/B063*xx* Motors:
Ø 8.998...9.007 (0.3543...0.3546)
VPL-A/B075*xx* Motors:
Ø 10.997...11.008 (0.4330...0.4334)

Shaft-end Threaded Hole

VPL-A/B063*xx* Motors:
Thread - M3 x 0.5-6H
Thread Depth - 9.0 (0.354)
VPL-A/B075*xx* Motors:
Thread - M4 x 0.7-6H
Thread Depth - 10.0 (0.393)

Detail A

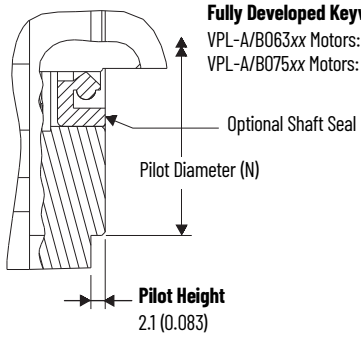

Shaft Detail with Key

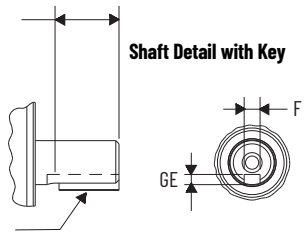

Key Supplied

VPL-A/B063*xx* = $3_{(+0, -0.025)}$ x $3_{(+0, -0.025)}$ x 13 Key
VPL-A/B075*xx* = $4_{(+0, -0.030)}$ x $4_{(+0, -0.030)}$ x 15 Key

Shaft, Pilot, and Keyway Tolerances	VPL-A/B063*xx*	VPL-A/B075*xx*
Shaft Runout (T.I.R.)	0.030 (0.0012)	0.035 (0.0014)
Pilot Eccentricity (T.I.R.)	0.08 (0.0031)	0.08 (0.0031)
Max Face Runout (T.I.R.)	0.08 (0.0031)	0.08 (0.0031)
Keyway Depth (GE)	1.80...1.90 (0.071...0.075)	2.50...2.60 (0.098...0.102)
Keyway Width (F)	2.971...2.996 (0.117...0.118)	3.970...4.000 (0.156...0.158)

VPL-A/B063*xx* and VPL-A/B075*xx* Motor Dimensions

Motor Cat. No.	AD mm (in.)	HD mm (in.)	LA mm (in.)	LD (1) mm (in.)	LE (1) mm (in.)	L (1) mm (in.)	LB (1) mm (in.)	L-LB (2) mm (in.)	D (4) mm (in.)	M mm (in.)	S (3) mm (in.)	N (4) mm (in.)	P mm (in.)	GE (4) mm (in.)	F (4) mm (in.)
VPL-A/B0631	69.5 (2.74)	97.0 (3.82)	9.0 (0.35)	100.2 (3.94)	60.3 (2.37)	143.1 (5.63)	123.1 (4.85)	20.0 (0.787)	9.0 (0.354)	63.0 (2.480)	5.80 (0.234)	40.0 (1.575)	55.0 (2.17)	1.90 (0.075)	3.0 (0.118)
VPL-A/B0632				125.2 (4.93)	85.3 (3.36)	168.1 (6.61)	148.1 (5.83)								
VPL-A/B0633				150.2 (5.91)	110.3 (4.34)	193.1 (7.59)	173.1 (6.81)								
VPL-A/B0751	77.0 (3.03)	112.0 (4.41)	9.0 (0.35)	102.0 (4.02)	62.1 (2.44)	147.9 (5.82)	124.9 (4.92)	23.0 (0.906)	11.0 (0.433)	75.0 (2.953)	5.80 (0.234)	60.0 (2.362)	70.0 (2.76)	2.60 (0.102)	4.0 (0.157)
VPL-A/B0752				127.0 (5.00)	87.1 (3.43)	172.9 (6.80)	149.9 (5.90)								
VPL-A/B0753				152.0 (5.98)	112.1 (4.41)	197.9 (7.79)	174.9 (6.89)								

(1) If ordering an VPL-A/B063*xx* or VPL-A/B075*xx* motor with brake, add 30.6 mm (1.20 in.) to dimension L, LB, LE, and LD.
(2) Tolerance for this dimension is ±0.7 mm (±0.028 in.).
(3) Tolerance for this dimension is +0.3, -0.0 mm (±0.006 in.).
(4) For keyway, shaft diameter, and pilot diameter tolerances, refer to page 22.

Motors are designed to metric dimensions. Inch dimensions are approximate conversions from millimeters. Dimensions without tolerances are for reference.

VPL-A/B100*xx*, VPL-A/B115*xx*, VPL-A/B130*xx*, and VPL-B165*xx* Motor Dimensions (SpeedTec DIN connectors)

Dimensions are in mm (in.)

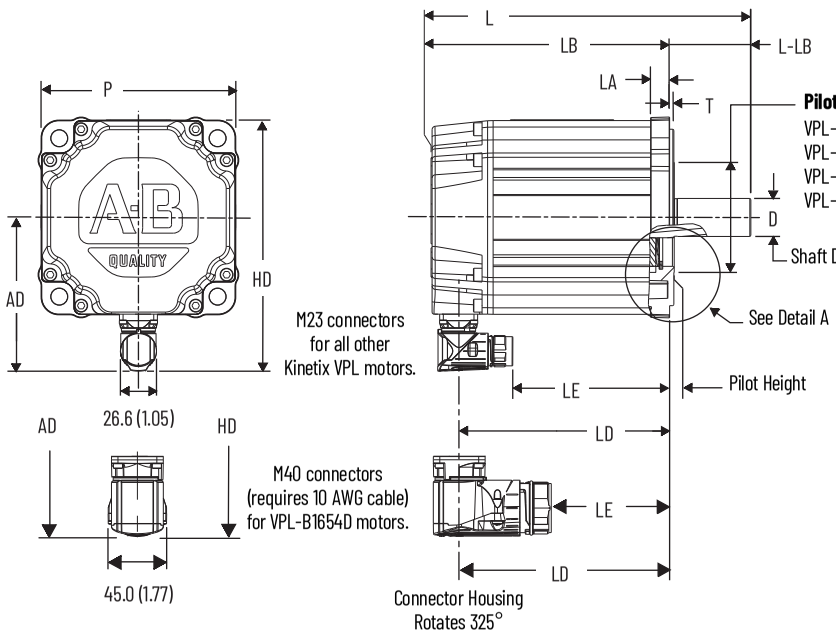

Pilot Relief Diameter
VPL-A/B100*xx* Motors = Ø 53.3 (2.10)
VPL-A/B115*xx* Motors = Ø 59.7 (2.35)
VPL-A/B130*xx* Motors = Ø 71.1 (2.80)
VPL-B165*xx* Motors = Ø 81.0 (3.19)

Optional Shaft Seal
Refer to page 6 for Kinetix VPL motor shaft-seal kit information.

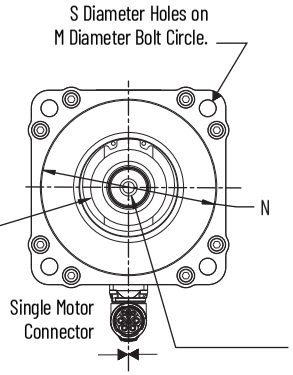

Pilot Diameter Tolerances
VPL-A/B100*xx* Motors:
Ø 79.993...80.012 (3.1493...3.1501)
VPL-A/B115*xx* Motors:
Ø 94.991...95.013 (3.7398...3.7407)
VPL-A/B130*xx* Motors:
Ø 109.991...110.013 (4.3303...4.3312)
VPL-B165*xx* Motors:
Ø 129.991...130.014 (5.1178...5.1187)

Shaft Diameter Tolerances
VPL-A/B100*xx* = Ø 15.997...16.008 (0.6298...0.6301)
VPL-A/B115*xx* = Ø 18.996...19.009 (0.7479...0.7483)
VPL-A/B130*xx* = Ø 23.996...24.009 (0.9448...0.9451)
VPL-B165*xx* = Ø 27.996...28.009 (1.1022...1.1027)

Shaft-end Threaded Hole
VPL-A/B100*xx* Motors:
Thread - M5 x 0.8-6H
Thread Depth - 12.5 (0.49)
VPL-A/B115*xx* Motors:
Thread - M6 x 1.0-6H
Thread Depth - 16.0 (0.63)
VPL-A/B130*xx* Motors:
Thread - M8 x 1.25-6H
Thread Depth - 19.1 (0.75)
VPL-B165*xx* Motors:
Thread - M10 x 1.5-6H
Thread Depth - 22.1 (0.87)

Detail A

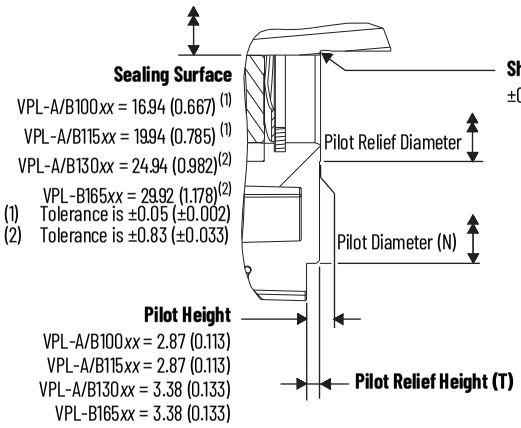

Shaft Detail with Key

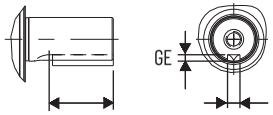

Keyway Length
VPL-A/B100*xx* = 25.4 (1.00)
VPL-A/B115*xx* = 25.4 (1.00)
VPL-A/B130*xx* = 32.3 (1.27)
VPL-B165*xx* = 41.1 (1.62)

Key Supplied
VPL-A/B100*xx* = $5_{(+0,\ -0.030)}$ x $5_{(+0,\ -0.030)}$ x 24 Key
VPL-A/B115*xx* = $6_{(+0,\ -0.030)}$ x $6_{(+0,\ -0.030)}$ x 24 Key
VPL-A/B130*xx* = $8_{(+0,\ -0.036)}$ x $7_{(+0,\ -0.090)}$ x 31 Key
VPL-B165*xx* = $8_{(+0,\ -0.036)}$ x $7_{(+0,\ -0.090)}$ x 39 Key

Motor Connectors on VPL-B165*xx* Motors		Motor Cat. No.
M23 Connector		VPL-B1651*x* VPL-B1652*x* VPL-B1653*x* VPL-B1654B
M40 Connector	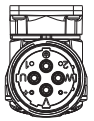	VPL-B1654D

Shaft, Pilot, and Keyway Tolerances	VPL-A/B100*xx*	VPL-A/B115*xx*	VPL-A/B130*xx* VPL-B165*xx*
Shaft Runout (T.I.R.)	0.04 (0.0016)		
Pilot Eccentricity (T.I.R.)	0.078 (0.0031)		
Max Face Runout (T.I.R.)	0.078 (0.0031)		
Keyway Depth (GE)	3.00...3.10 (0.118...0.122)	3.50...3.60 (0.138...0.142)	4.00...4.20 (0.158...0.165)
Keyway Width (F)	4.97...5.00 (0.196...0.197)	5.97...6.00 (0.235...0.236)	7.96...8.00 (0.314...0.315)

VPL-A/B100*xx*, VPL-A/B115*xx*, VPL-A/B130*xx*, and VPL-B165*xx* Motor Dimensions (SpeedTec DIN connectors)

Motor Cat. No.	AD mm (in.)	HD mm (in.)	T mm (in.)	LA mm (in.)	LD [1] mm (in.)	LE [1] mm (in.)	L [1] mm (in.)	LB [1] mm (in.)	L-LB [2] mm (in.)	D [3] mm (in.)	M mm (in.)	S mm (in.)	N [3] mm (in.)	P mm (in.)	GE [3] mm (in.)	F [3] mm (in.)
VPL-A/B1001	86.5 (3.40)	131.2 (5.17)	2.74 (0.108)	9.90 (0.39)	108.7 (4.28)	68.9 (2.71)	169.8 (6.68)	129.8 (5.11)	40.0 (1.575)	16.0 (0.630)	100.0 (3.937)	7.00 [4] (0.283)	80.0 (3.15)	89.4 (3.52)	3.0 (0.118)	5.0 (0.197)
VPL-A/B1002					134.1 (5.28)	94.3 (3.71)	195.2 (7.68)	155.2 (6.11)								
VPL-A/B1003					159.5 (6.28)	119.7 (4.71)	220.6 (8.68)	180.6 (7.11)								
VPL-A/B1152	90.8 (3.58)	140.0 (5.51)	2.74 (0.108)	10.16 (0.40)	130.6 (5.14)	90.7 (3.57)	191.6 (7.54)	151.6 (5.97)	40.0 (1.575)	19.0 (0.748)	115.0 (4.528)	10.00 [4] (0.401)	95.0 (3.74)	98.3 (3.87)	3.5 (0.138)	6.0 (0.236)
VPL-A/B1153					156.0 (6.14)	116.1 (4.57)	217.0 (8.54)	177.0 (6.97)								
VPL-A/B1303	98.6 (3.88)	155.4 (6.12)	2.74 (0.108)	12.19 (0.48)	159.3 (6.27)	119.4 (4.70)	230.3 (9.06)	180.3 (7.10)	50.0 (1.969)	24.0 (0.945)	130.0 (5.118)	10.00 [4] (0.401)	110.0 (4.331)	113.7 (4.48)	4.0 (0.158)	8.0 (0.315)
VPL-A/B1304					184.7 (7.27)	144.8 (5.70)	255.7 (10.06)	205.7 (8.10)								
VPL-A/B1306					235.5 (9.27)	195.6 (7.70)	306.5 (12.06)	256.5 (10.10)								
VPL-B1651	113.3 (4.46)	185.0 (7.28)	3.12 (0.123)	14.0 (0.55)	155.4 (6.12)	115.6 (4.55)	235.6 (9.27)	175.6 (6.92)	60.0 (2.362)	28.0 (1.102)	165.0 (6.496)	12.00 [5] (0.481)	130.0 (5.118)	143.5 (5.65)	4.0 (0.158)	8.0 (0.315)
VPL-B1652					206.2 (8.12)	166.4 (6.55)	286.4 (11.27)	226.4 (8.92)								
VPL-B1653					257.0 (10.12)	217.2 (8.55)	337.2 (13.27)	277.2 (10.92)								
VPL-B1654B					307.8 (12.12)	268.0 (10.55)	388.0 (15.28)	328.0 (12.92)								
VPL-B1654D	132.9 (5.23)	204.6 (8.06)			306.8 (12.08)	235.8 (9.28)										

(1) If ordering a VPL-A/B100*xx*-*xxx*4*xx* motor with brake, add 34.5 mm (1.36 in.) to dimensions L, LB, LE, and LD.
If ordering a VPL-A/B115*xx*-*xxx*4*xx* motor with brake, add 48.5 mm (1.91 in.) to dimensions L, LB, LE, and LD.
If ordering a VPL-A/B130*xx*-*xxx*4*xx* motor with brake, add 48.5 mm (1.91 in.) to dimensions L, LB, LE, and LD.
If ordering a VPL-B165*xx*-*xxx*4*xx* motor with brake, add 51.5 mm (2.03 in.) to dimensions L, LB, LE, and LD.
(2) Tolerance for this dimension is ±0.7 mm (±0.028 in.).
(3) For keyway, shaft diameter, and pilot diameter tolerances, refer to page 24.
(4) Tolerance for this dimension is +0.36, -0.0 mm (±0.007 in.).
(5) Tolerance for this dimension is +0.43 -0.0 mm (±0.008 in.).

Motors are designed to metric dimensions. Inch dimensions are approximate conversions from millimeters. Dimensions without tolerances are for reference.

Kinetix VPC Continuous-duty Servo Motors



The Kinetix VPC servo motors are available with optimized performance ratings and features aligned to the Kinetix 5700 drive system for applications with high-torque and high-speed demands. With improved encoder offerings, Kinetix 2090 single cable capability, and a field-replaceable fan, this motor provides a significant boost in functionality and power. Kinetix VPC servo motors employ cutting-edge interior permanent-magnet technology that enables increased maximum speeds, low-torque ripple, and IE4/IE5 energy efficiency to improve and extend machine performance while maintaining a competitive system cost.

Kinetix VPC Servo Motor Features

Attribute	Value
Main characteristics	• Developed to match Kinetix 5700 drives for optimized system sizing and performance • Kinetix 2090 single cable technology • Cooling fan (F option) or fanless (without cooling fan) motor (A option) – Fan for increased torque/power output – Fanless for reduced wiring and less air disturbance • Larger bearings for higher radial loads and longer life • Integrated foot mount for expanded application space • IE4 and IE5 energy efficiency rated
Features	• 400V-class windings • Single-turn and multi-turn high-resolution absolute encoders • SIL 2 (PLd) rated encoder options • High-accuracy EnDat digital encoder option • Interior permanent-magnet design • Shaft-end threaded hole • SpeedTec DIN connector • Standard IEC 72-1 mounting dimensions
Motor type	Brushless AC synchronous servo motors
Environmental rating	IP65 with shaft seal and use of Rockwell Automation factory-delivered Kinetix 2090 cables
Certifications	Kinetix VPC rotary motors are UL Recognized components to applicable UL and CSA standards. CE marked for all applicable directives. Refer to rok.auto/certifications for the Product Certifications website.
Continuous stall torque	17.6…191.1 N•m (156…1691 lb•in)
Peak stall torque	40.3…327.8 N•m (357…2901 lb•in)
Rated speed	1000, 1500, 2000, and 3000 rpm
Motor rated output	3.4…30 kW (4.6…40.2 Hp)
Compatible servo drives	Kinetix 5700
Compatible servo cables	• 2090-CS*x*M1*xx*-*xx*AA/AF*xx* (TPE) cables • 2090-CS*x*M1*xx*-*xx*VA/LF*xx* (PVC and PUR) cables • 2090-C*xx*M7*xx* cables
Typical applications	• Converting • Printing • Web handling • Material handling

Catalog Numbers - Kinetix VPC Servo Motors

Catalog numbers consist of various characters, each of which identifies a specific option for that component. Use the catalog numbering table chart below to understand the configuration of your motor. For questions regarding product availability, contact your Allen-Bradley distributor.

VP C - B *xxx* *x* *x* - *x* *x* *x* *x* *x* S

Factory Options
S = Shaft seal, standard (IP65)

Cooling
A = Natural convection
F = Forced ventilation

Brake
2 = No brake
4 = 24V DC holding brake

Connectors
1 = Single SpeedTec DIN connector, right angle, 325° rotatable
7 = SpeedTec DIN connector, right angle, 180° rotatable

Shaft Key
J = Shaft key
K = Smooth shaft

Feedback
S = 1024 sin/cos, absolute single-turn encoder (Hiperface protocol)
M = 1024 sin/cos, absolute multi-turn encoder (Hiperface protocol) (1)
Q = 23-bit absolute multi-turn digital encoder, SIL2/PLd rated, 12-bit secondary safety channel (Hiperface DSL protocol)
Y = 25-bit absolute multi-turn digital encoder (EnDat digital protocol)

Rated Speed (2) (3)
9 = 1000 rpm
A = 1500 rpm
B = 2000 rpm
D = 3000 rpm

Magnet Stack Length (2, 3, 4, 5, 6 stacks) (3)

Frame Size - Bolt Circle Diameter (BCD / Shaft Height (SH)
165 = IEC 165 mm BCD / SH 80 mm
215 = IEC 215 mm BCD / SH 100 mm
300 = IEC 300 mm BCD / SH 132 mm

Voltage Class
B = 400V

Series Type
C = Continuous Duty

Series
VP = Permanent magnet rotary servo motors that are optimized to Kinetix 5700 drive ratings

(1) M encoder option is available on only VPC-B3004*x* servo motors.
(2) Rated speed hierarchy is only for comparative purposes. Use Motion Analyzer software to size and select motors for your application, and/or the torque/speed curves in the Kinetix 5700 Drive System Design Guide, publication KNX-RM010.
(3) Not all combinations are available. Only the configurations for rated speed and magnet stack length, as listed in on page 30 are available. Use Motion Analyzer software to size and select motors for your application.

Kinetix VPC Servo Motor High-resolution Encoders

Kinetix VPC servo motors are available with high-performance encoders with a choice of single-turn (-S) or multi-turn (-M, -Q, or -Y) high-resolution feedback:

- VPC-B*xxxxx*-S motors with Hiperface protocol
  - 1024 sin/cos cycles per revolution for up to 21-bit resolution (2,097,152 counts per revolution), absolute single-turn encoder
- VPC-B3004*x*-M motors with Hiperface protocol
  - 1024 sin/cos cycles per revolution for up to 21-bit resolution (2,097,152 counts per revolution), absolute multi-turn encoder
- VPC-B*xxxxx*-Q motor with Hiperface DSL protocol
  - 23-bit resolution for up to 8,388,608 counts per revolution, absolute multi-turn digital encoder, 4096 turns
  - SIL2/PLd rated, 12-bit secondary safety channel
  - Digital two-wire communication integrated into the Kinetix 2090 single motor cable
- VPC-B*xxxxx*-Y motors with EnDat Digital protocol
  - 25-bit resolution for up to 33,554,432 counts per revolution, absolute multi-turn digital encoder, 4096 turns

Kinetix 2090 Single Cable Technology

Motor connectivity reduced to a single connector and cable with VPC-B*xxxxx*-Q motors

- Single cable eliminates hardware and wire terminations
- Purely digital two-wire communication integrated into the motor power cable
- TPE cable material for standard (non-flex) and continuous-flex cable
- PVC cable material for standard (non-flex) and Halogen-free PUR continuous-flex cable
- 2090-CS*x*M1D*x* cables are available in 1.0 m (3.2 ft) increments up to 90 m (295 ft) for Kinetix 5700 drives

Motor Connector/Cable Compatibility

VPC-B*xxxxx*-Q motors are equipped with DSL encoders.

Single SpeedTec DIN Connector

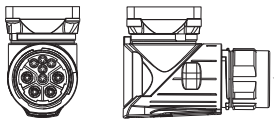

- VPC-B165*xx*...VPC-B300*xx* motors
- Receives only single cable plugs
- Attach cable plug with one-quarter turn

SpeedTec DIN (M1) Single Cable Plug

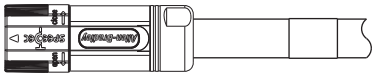

- 2090-CSBM1DE-*xxx*A*xx* (standard, non-flex) power/feedback/brake cables
- 2090-CSWM1DE-*xxx*A*xx* (standard, non-flex) power/feedback cables
- 2090-CSBM1DE-*xxx*F*xx* (continuous-flex) power/feedback/brake cables
- 2090-CSBM1DG-*xxx*A*xx* (standard, non-flex) power/feedback/brake cables
- 2090-CSWM1DG-*xxx*A*xx* (standard, non-flex) power/feedback cables
- 2090-CSBM1DG-*xxx*F*xx* (continuous-flex) power/feedback/brake cables

IMPORTANT Due to the unique characteristics of Kinetix 2090 single cable technology, designed for and tested with Kinetix 5700 drives and Kinetix VPC-B*xxxxx*-Q motors, building your own cables or using third-party cable is not an option.

VPC-B*xxxxx*-S and VPC-B3004*x*-M motors are equipped with Hiperface encoders and VPC-B*xxxxx*-Y motors are equipped with EnDat encoders.

SpeedTec DIN Connectors

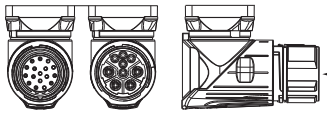

- VPC-B165*xx*...VPC-B300*xx* motors
- Motor power/brake and feedback connectors
- Attach M7 cable plug with one-quarter turn

SpeedTec DIN (M7) Cable Plug

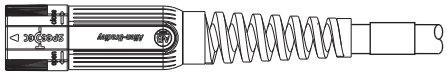

- 2090-CFBM7DF-CEAA*xx* (standard, non-flex) flying-lead, feedback cables
- 2090-CFBM7DD-CEAA*xx* (standard, non-flex) drive-end connector, feedback cables
- 2090-CFBM7DF-CEAF*xx* (continuous-flex) flying-lead, feedback cables
- 2090-CFBM7DD-CEAF*xx* (continuous-flex) drive-end connector, feedback cables
- 2090-CFBM7DF-CDAF*xx* (continuous-flex) flying-lead, feedback cables
- 2090-CPWM7DF-*xx*AA*xx* (standard, non-flex) power-only cables
- 2090-CPBM7DF-*xx*AA*xx* (standard, non-flex) power/brake cables
- 2090-CPWM7DF-*xx*AF*xx* (continuous-flex) power-only cables
- 2090-CPBM7DF-*xx*AF*xx* (continuous-flex) power/brake cables

For Kinetix 2090 motor cable specifications, refer to Kinetix Rotary and Linear Motion Cable Specifications Technical Data, publication KNX-TD004.

Kinetix VPC Servo Motor Options

Kinetix VPC servo motors are available with these configurable options:

- 24V DC holding brake.
- Choice of forced ventilation (fan) or natural convection (without fan) motor.
- Choice of keyed or smooth shaft.
- Shaft seal kits are standard and are also available as replacement kits for field installation. Shaft seals are made of nitrile and kits include a lubricant to reduce wear.

IMPORTANT Shaft seals are subject to wear and require periodic inspection and replacement. Replacement is recommended every 3 months, not to exceed 12 months, depending on use.

Shaft Seal Kit Catalog Numbers

Motor Cat. No.	Shaft Seal Kit Cat. No.
VPC-B165*xx*	MPL-SSN-A6B6
VPC-B215*xx*	VPL-SS-X256
VPC-B300*xx*	VPC-SSN-F300

Refer to the Kinetix VPC Continuous-duty Servo Motors Installation Instructions, publication VPC-IN001, for more information on motor accessories.

Technical Specifications - Kinetix VPC Servo Motors

Kinetix VPC servo motors are available with (-*xxxx*FS) and without (-*xxxx*AS) a cooling fan. The Continuous Rated Torque column lets you compare torque values for both options at the corresponding rated speed.

Kinetix VPC Servo Motor Performance Specifications

Motor Cat. No.	Rated Speed rpm	Maximum (1) Speed rpm	Continuous Stall Torque N•m (lb•in)	Continuous Rated Torque N•m (lb•in)	Peak Stall Torque N•m (lb•in)	Motor Rated Output kW (Hp)	Motor Rated (2) Efficiency %	Rotor Inertia (3) kg-m^2 (lb•in•s^2)	Motor Weight, (3) approx kg (lb)
VPC-B1652A-*xxxx*AS	1500	2300	25.2 (223)	21.9 (194)	40.3 (357)	3.4 (4.6)	91.2 (IE4)	0.00286 (0.025)	18.5 (40.8)
VPC-B1652A-*xxxx*FS		4500 (2347)	25.5 (226)	25.5 (226)		4.0 (5.4)	91.1 (IE4)		20.1 (44.3)
VPC-B1653A-*xxxx*AS	1500	2300	31.8 (281)	28.1 (249)	60.6 (536)	4.4 (5.9)	93.1 (IE5)	0.00410 (0.036)	25.7 (56.7)
VPC-B1653A-*xxxx*FS		4500 (2310)	35.1 (311)	35.1 (311)		5.5 (7.4)	92.6 (IE5)		24.0 (52.8)
VPC-B1652D-*xxxx*AS	3000	4400	17.6 (156)	15.3 (135)	40.7 (360)	4.8 (6.4)	94.0 (IE5)	0.00286 (0.025)	18.5 (40.8)
VPC-B1652D-*xxxx*FS		5000 (4452)		17.6 (156)		5.5 (7.4)	93.0 (IE5)		20.1 (44.3)
VPC-B1653D-*xxxx*AS	3000	4200	24.0 (212)	18.5 (164)	61.4 (543)	5.8 (7.8)	94.1 (IE5)	0.00410 (0.036)	24.0 (52.8)
VPC-B1653D-*xxxx*FS		5000 (4294)		24.0 (212)		7.5 (10.1)	93.8 (IE5)		25.7 (56.7)
VPC-B1654D-*xxxx*AS	3000	4200	35.1 (311)	22.3 (197)	76.6 (678)	7.0 (9.4)	95.3 (IE5)	0.00532 (0.047)	29.5 (65.1)
VPC-B1654D-*xxxx*FS		5000 (4494)		35.1 (311)		11.0 (14.7)	93.5 (IE5)		31.3 (69.1)
VPC-B21539-*xxxx*AS	1000	1500	52.5 (465)	51.1 (452)	118.8 (1051)	5.3 (7.2)	92.8 (IE5)	0.0106 (0.09)	38.7 (85.4)
VPC-B21539-*xxxx*FS		3000 (1573)		52.5 (465)		5.5 (7.4)	92.7 (IE5)		41.8 (92.1)
VPC-B21549-*xxxx*AS	1000	1500	72.0 (637)	64.4 (570)	158.4 (1402)	6.7 (9.0)	93.1 (IE5)	0.0138 (0.12)	46.8 (103.2)
VPC-B21549-*xxxx*FS		3000 (1573)		72.0 (637)		7.5 (10.1)	92.9 (IE5)		50.2 (110.6)
VPC-B2153A-*xxxx*AS	1500	2300	48.0 (425)	46.2 (409)	111.8 (990)	7.3 (9.7)	93.3 (IE5)	0.0106 (0.09)	38.4 (85.4)
VPC-B2153A-*xxxx*FS		4500 (2325)		48.0 (425)		7.5 (10.1)	93.9 (IE5)		41.8 (92.1)
VPC-B2154A-*xxxx*AS	1500	2300	70.1 (620)	58.7 (520)	140.1 (1240)	9.2 (12.3)	94.4 (IE5)	0.0138 (0.12)	46.8 (103.2)
VPC-B2154A-*xxxx*FS		4500 (2333)		70.1 (620)		11.0 (14.7)	94.5 (IE5)		50.2 (110.6)
VPC-B2154B-*xxxx*AS	2000	3200	48.0 (425)	45.1 (399)	131.4 (1163)	9.4 (12.6)	95.7 (IE5)		46.8 (103.2)
VPC-B2154D-*xxxx*FS	3000	5000 (4294)		48.0 (425)		15.0 (20.1)	94.5 (IE5)		50.2 (110.6)
VPC-B2155B-*xxxx*AS	2000	3200	59.0 (522)	51.7 (458)	156.7 (1387)	10.8 (14.5)	94.4 (IE5)	0.0170 (0.15)	55.6 (122.5)
VPC-B2155D-*xxxx*FS	3000	5000 (4172)	59.0 (522)	59.0 (522)	156.7 (1387)	18.5 (24.8)	94.0 (IE4)		58.9 (129.9)

Kinetix VPC Servo Motor Performance Specifications (Continued)

Motor Cat. No.	Rated Speed rpm	Maximum (1) Speed rpm	Continuous Stall Torque N•m (lb•in)	Continuous Rated Torque N•m (lb•in)	Peak Stall Torque N•m (lb•in)	Motor Rated Output kW (Hp)	Motor Rated (2) Efficiency %	Rotor Inertia (3) kg-m^2 (lb•in•s^2)	Motor Weight, (3) approx kg (lb)
VPC-B2156A-*xxxx*AS	1500	2800	70.1 (620)	56.1 (497)	185.5 (1642)	8.8 (11.8)	93.9 (IE5)	0.0203 (0.17)	63.3 (139.6)
VPC-B2156D-*xxxx*FS	3000	5000 (4101)	70.1 (620)	70.1 (620)	185.5 (1642)	22.0 (29.5)	94.0 (IE4)		66.8 (147.3)
VPC-B30029-*xxxx*AS	1000	1400	103.4 (915)	100.2 (887)	183.7 (1626)	10.5 (14.1)	94.8 (IE5)	0.0285 (0.25)	75.0 (165.2)
VPC-B30029-*xxxx*FS		3000 (1493)	105.1 (930)	105.1 (930)		11.0 (14.7)	94.9 (IE5)		81.4 (179.5)
VPC-B30039-*xxxx*AS	1000	1400	142.4 (1260)	135.7 (1201)	237.9 (2106)	14.2 (19.1)	96.4 (IE5)	0.0399 (0.35)	89.3 (196.8)
VPC-B30039-*xxxx*FS		3000 (1472)	143.3 (1268)	143.3 (1268)		15.0 (20.1)	96.3 (IE5)		95.7 (210.9)
VPC-B30049-*xxxx*AS	1000	1400	176.1 (1558)	167.7 (1484)	327.8 (2901)	17.6 (23.6)	95.6 (IE5)	0.0520 (0.46)	109.8 (242.2)
VPC-B30049-*xxxx*FS		3000 (1429)	176.7 (1564)	176.7 (1564)		18.5 (24.8)	96.5 (IE5)		116.7 (257.2)
VPC-B3002A-*xxxx*AS	1500	2200	95.5 (845)	90.6 (802)	170.4 (1508)	14.2 (19.1)	94.6 (IE5)	0.0285 (0.25)	75.0 (165.2)
VPC-B3002A-*xxxx*FS		4000 (2212)		95.5 (845)		15.0 (20.1)	95.2 (IE5)		81.4 (179.5)
VPC-B3003A-*xxxx*AS	1500	2100	140.3 (1242)	111.3 (985)	244.8 (2167)	17.5 (23.4)	96.7 (IE5)	0.0399 (0.35)	89.3 (196.8)
VPC-B3003A-*xxxx*FS		3500 (2166)		140.3 (1242)		22.0 (29.5)	96.3 (IE5)		95.7 (210.9)
VPC-B3004A-*xxxx*AS	1500	2100	191.1 (1691)	155.1 (1373)	319.0 (2823)	24.4 (34.1)	95.9 (IE5)	0.0520 (0.46)	109.8 (242.2)
VPC-B3004A-*xxxx*FS		3500 (2128)		191.1 (1691)		30.0 (40.2)	96.0 (IE5)		116.7 (257.2)
VPC-B3004B-*xxxx*AS	2000	2800	95.5 (845)	78.1 (691)	257.7 (2281)	16.4 (22.0)	94.0 (IE5)	0.0520 (0.46)	109.8 (242.2)
VPC-B3004D-*xxxx*FS	3000	4000 (4054)	95.5 (845)	95.5 (845)	257.7 (2281)	30.0 (40.2)	94.7 (IE4)		116.7 (257.2)

(1) Operation beyond maximum speed requires DC-bus protection. Bus overvoltage speed is shown in parentheses. See the Kinetix 5700 Servo Drives User Manual, publication 2198-UM002, for more information on bus overvoltage speed, field-weakening mode, and the extended speed feature.
(2) Kinetix VPC motor is rated at or above IE4 efficiency for rated torque, speed, and temperature, with power supplied by a Kinetix 5700 drive, and switching at 4.0 kHz PWM frequency.
(3) Refer to Kinetix VPC Servo Motor Brake Specifications for brake rotor inertia and brake motor weight.

Kinetix VPC Servo Motor Brake Specifications

Motor Cat. No.	Backlash, max (brake engaged) arc minutes	Holding Torque N•m (lb•in)	Coil Current at 24V DC A	Brake Response Time		Brake Rotor Inertia kg-m^2 (lb•in•s^2)	Brake Motor (1) Weight, approx kg (lb)	Brake Motor (2) Weight, approx kg (lb)
				Release ms	Engage (3) ms			
VPC-B1652	30	35.0 (310)	1.01…1.70	50	200	0.00299 (0.026)	23.3 (51.4)	21.6 (47.6)
VPC-B1653						0.00421 (0.037)	28.9 (63.7)	27.1 (59.7)
VPC-B1654						0.00543 (0.048)	34.3 (75.7)	32.4 (71.4)
VPC-B2153		72 (637)	1.73…3.00	200	300	0.0108 (0.09)	52.7 (116.1)	49.4 (108.9)
VPC-B2154						0.0141 (0.12)	60.7 (133.7)	57.2 (126.2)
VPC-B2155						0.0174 (0.15)	69.8 (153.8)	66.3 (146.2)
VPC-B2156						0.0205 (0.18)	77.7 (171.3)	74.2 (163.6)
VPC-B3002		200 (1770)	2.35…3.90	300	1000	0.0290 (0.25)	102.9 (226.8)	96.0 (211.7)
VPC-B3003						0.0412 (0.36)	117.1 (258.1)	110.1 (242.7)
VPC-B3004						0.0539 (0.47)	138.1 (304.5)	130.7 (288.2)

(1) Brake motor weight with cooling fan, catalog number VPC-B*xxxxx-xxxx*FS.
(2) Brake motor weight without cooling fan, catalog number VPC-B*xxxxx-xxxx*AS.
(3) By using diode and zener diode as arc suppression device in external control circuit.

Field Weakening Mode

Kinetix VPC interior permanent magnet (IPM) motors are designed to operate in Field Weakening mode to widen the speed range. Operation in Field Weakening mode can result in Back EMF voltage increasing to a level that exceeds the DC-bus voltage if a loss of control occurs. When this loss of control occurs, the Back EMF voltage can charge the DC-bus to a level that can overvoltage the DC-bus caps and result in a failure of the common DC-bus.

Field Weakening Region

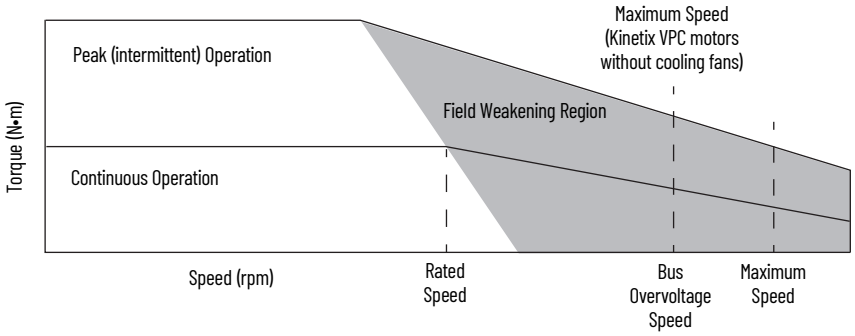

ATTENTION: Operation at speeds exceeding the Bus Overvoltage Speed requires the use of an active shunt, configured in the Studio 5000 Logix Designer® application, to protect the DC bus system from an overvoltage condition. DC-bus failure can cause damage to all drive modules in the bus group, not just the inverter connected to the Kinetix VPC servo motor. See the Kinetix 5700 Servo Drives User Manual, publication 2198-UM002, for information on active shunt selection and configuration.

Extended Speed Feature

The Extended Speed feature is implemented in the Studio 5000 Logix Designer application to help prevent accidental operation at unsafe speeds. With this feature, the Logix 5000™ controller calculates a Bus Overvoltage Speed based on the drive's maximum bus-voltage and the Back EMF of the motor. This is the maximum speed that does not risk damaging the drive modules in the bus group. By default, the Extended Speed feature limits motor velocity to the Bus Overvoltage Speed.

IMPORTANT Bus Overvoltage Speed, identified in the Field Weakening Region figure, is maximum speed for Kinetix VPC motors without cooling fans.

Kinetix VPC Servo Motor Load Force Ratings

Kinetix VPC servo motors are capable of operating with the maximum radial or maximum axial shaft loads listed in the following tables. Radial loads listed are applied in the middle of the shaft extension. There are two sets of tables starting below that represent an L_{10} bearing fatigue life of 20,000 and 40,000 hours. Bearing fatigue life does not account for possible application-specific life reduction that can occur due to bearing grease contamination from external sources. Maximum operating speed is limited by motor winding.

Load Forces on Shaft

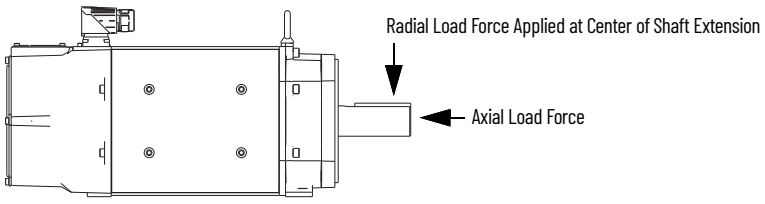

Kinetix VPC Servo Motors (20,000 hours bearing-fatigue life)

Radial Load Force Ratings (maximum) for Non-brake Motors

Motor Cat. No. (1)	Maximum (2) Speed rpm	RPM									
		500 N (lb)	1000 N (lb)	1500 N (lb)	2000 N (lb)	2500 N (lb)	3000 N (lb)	3500 N (lb)	4000 N (lb)	4500 N (lb)	5000 N (lb)
VPC-B1652A	4500	2719 (611.3)	2158 (485.2)	1885 (423.8)	1713 (385.1)	1590 (357.5)	1496 (336.4)	1421 (319.5)	1359 (305.6)	1307 (293.9)	–
VPC-B1653A	4500	2871 (645.5)	2279 (512.3)	1991 (447.6)	1809 (406.6)	1679 (377.5)	1580 (355.2)	1501 (337.4)	1436 (322.7)	1380 (310.3)	–
VPC-B1652D	5000	2719 (611.3)	2158 (485.2)	1885 (423.8)	1713 (385.1)	1590 (357.5)	1496 (336.4)	1421 (319.5)	1359 (305.6)	1307 (293.9)	1262 (283.7)
VPC-B1653D	5000	2871 (645.5)	2279 (512.3)	1991 (447.6)	1809 (406.6)	1679 (377.5)	1580 (355.2)	1501 (337.4)	1436 (322.7)	1380 (310.3)	1333 (299.6)
VPC-B1654D	5000	2952 (663.7)	2343 (526.7)	2047 (460.2)	1860 (418.1)	1726 (388.1)	1625 (365.2)	1543 (346.9)	1476 (331.8)	1419 (319.1)	1370 (308.0)
VPC-B21539	3000	3763 (846.1)	2987 (671.5)	2609 (586.6)	2371 (533.0)	2201 (494.8)	2071 (465.6)	–	–	–	–
VPC-B21549	3000	3862 (868.3)	3066 (689.2)	2678 (602.0)	2433 (547.0)	2259 (507.8)	2126 (477.8)	–	–	–	–
VPC-B2153A	4500	3763 (846.1)	2987 (671.5)	2609 (586.6)	2371 (533.0)	2201 (494.8)	2071 (465.6)	1967 (442.3)	1882 (423.0)	1809 (406.7)	–
VPC-B2154A	4500	3862 (868.3)	3066 (689.2)	2678 (602.0)	2433 (547.0)	2259 (507.8)	2126 (477.8)	2019 (453.9)	1931 (434.1)	1857 (417.4)	–
VPC-B2154B	3200	3862 (868.3)	3066 (689.2)	2678 (602.0)	2433 (547.0)	2259 (507.8)	2126 (477.8)	–	–	–	–
VPC-B2154D	5000	3862 (868.3)	3066 (689.2)	2678 (602.0)	2433 (547.0)	2259 (507.8)	2126 (477.8)	2019 (453.9)	1931 (434.1)	1857 (417.4)	1793 (403.0)
VPC-B2155B	3200	3941 (886.1)	3128 (703.3)	2733 (614.4)	2483 (558.2)	2305 (518.2)	2169 (487.6)	–	–	–	–
VPC-B2155D	5000	3941 (886.1)	3128 (703.3)	2733 (614.4)	2483 (558.2)	2305 (518.2)	2169 (487.6)	2060 (463.2)	1971 (443.0)	1895 (426.0)	1829 (411.3)
VPC-B2156A	2800	4006 (900.6)	3180 (714.8)	2778 (624.4)	2524 (567.3)	2343 (526.7)	–	–	–	–	–
VPC-B2156D	5000	4006 (900.6)	3180 (714.8)	2778 (624.4)	2524 (567.3)	2343 (526.7)	2205 (495.6)	2094 (470.8)	2003 (450.3)	1926 (433.0)	1859 (418.0)
VPC-B30029	3000	5702 (1282.0)	4526 (1017.5)	3954 (888.9)	3592 (807.6)	3335 (749.7)	3138 (705.5)	–	–	–	–
VPC-B30039	3000	5702 (1282.0)	4526 (1017.5)	3954 (888.9)	3592 (807.6)	3335 (749.7)	3138 (705.5)	–	–	–	–
VPC-B30049	3000	5861 (1317.7)	4652 (1045.9)	4064 (913.6)	3692 (830.1)	3428 (770.6)	3226 (725.2)	–	–	–	–
VPC-B3002A	4000	5702 (1282.0)	4526 (1017.5)	3954 (888.9)	3592 (807.6)	3335 (749.7)	3138 (705.5)	2981 (670.2)	2851 (641.0)	–	–
VPC-B3003A	3500	5702 (1282.0)	4526 (1017.5)	3954 (888.9)	3592 (807.6)	3335 (749.7)	3138 (705.5)	2981 (670.2)	–	–	–
VPC-B3004A	3500	5861 (1317.7)	4652 (1045.9)	4064 (913.6)	3692 (830.1)	3428 (770.6)	3226 (725.2)	3064 (688.8)	–	–	–
VPC-B3004B	2800	5861 (1317.7)	4652 (1045.9)	4064 (913.6)	3692 (830.1)	3428 (770.6)	–	–	–	–	–
VPC-B3004D	4000	5861 (1317.7)	4652 (1045.9)	4064 (913.6)	3692 (830.1)	3428 (770.6)	3226 (725.2)	3064 (688.8)	2931 (658.8)	–	–

(1) 1.0 N = 0.225 lb
(2) For Kinetix VPC bus overvoltage speed with and without a cooling fan, see Technical Specifications - Kinetix VPC Servo Motors on page 30.

Axial Load Force Ratings (maximum radial load) for Non-brake Motors

Motor Cat. No. (1)	Maximum (2) Speed rpm	RPM									
		500 N (lb)	1000 N (lb)	1500 N (lb)	2000 N (lb)	2500 N (lb)	3000 N (lb)	3500 N (lb)	4000 N (lb)	4500 N (lb)	5000 N (lb)
VPC-B1652A	4500	927 (208.4)	686 (154.2)	575 (129.3)	508 (114.1)	461 (103.6)	426 (95.7)	398 (89.5)	376 (84.4)	357 (80.2)	–
VPC-B1653A	4500	927 (208.4)	686 (154.2)	575 (129.3)	508 (114.1)	461 (103.6)	426 (95.7)	398 (89.5)	376 (84.4)	357 (80.2)	–
VPC-B1652D	5000	927 (208.4)	686 (154.2)	575 (129.3)	508 (114.1)	461 (103.6)	426 (95.7)	398 (89.5)	376 (84.4)	357 (80.2)	341 (76.6)
VPC-B1653D	5000	927 (208.4)	686 (154.2)	575 (129.3)	508 (114.1)	461 (103.6)	426 (95.7)	398 (89.5)	376 (84.4)	357 (80.2)	341 (76.6)
VPC-B1654D	5000	927 (208.4)	686 (154.2)	575 (129.3)	508 (114.1)	461 (103.6)	426 (95.7)	398 (89.5)	376 (84.4)	357 (80.2)	341 (76.6)
VPC-B21539	3000	1196 (269.0)	885 (199.0)	742 (166.9)	655 (147.3)	594 (133.6)	549 (123.5)	–	–	–	–
VPC-B21549	3000	1196 (269.0)	885 (199.0)	742 (166.9)	655 (147.3)	594 (133.6)	549 (123.5)	–	–	–	–
VPC-B2153A	4500	1196 (269.0)	885 (199.0)	742 (166.9)	655 (147.3)	594 (133.6)	549 (123.5)	514 (115.5)	485 (109.0)	460 (103.5)	–
VPC-B2154A	4500	1196 (269.0)	885 (199.0)	742 (166.9)	655 (147.3)	594 (133.6)	549 (123.5)	514 (115.5)	485 (109.0)	460 (103.5)	–
VPC-B2154B	3200	1196 (269.0)	885 (199.0)	742 (166.9)	655 (147.3)	594 (133.6)	549 (123.5)	–	–	–	–
VPC-B2154D	5000	1196 (269.0)	885 (199.0)	742 (166.9)	655 (147.3)	594 (133.6)	549 (123.5)	514 (115.5)	485 (109.0)	460 (103.5)	440 (98.9)
VPC-B2155B	3200	1196 (269.0)	885 (199.0)	742 (166.9)	655 (147.3)	594 (133.6)	549 (123.5)	–	–	–	–
VPC-B2155D	5000	1196 (269.0)	885 (199.0)	742 (166.9)	655 (147.3)	594 (133.6)	549 (123.5)	514 (115.5)	485 (109.0)	460 (103.5)	440 (98.9)
VPC-B2156A	2800	1196 (269.0)	885 (199.0)	742 (166.9)	655 (147.3)	594 (133.6)	–	–	–	–	–
VPC-B2156D	5000	1196 (269.0)	885 (199.0)	742 (166.9)	655 (147.3)	594 (133.6)	549 (123.5)	514 (115.5)	485 (109.0)	460 (103.5)	440 (98.9)
VPC-B30029	3000	1820 (409.2)	1347 (302.8)	1129 (253.9)	997 (224.1)	905 (203.3)	836 (187.9)	–	–	–	–
VPC-B30039	3000	1820 (409.2)	1347 (302.8)	1129 (253.9)	997 (224.1)	905 (203.3)	836 (187.9)	–	–	–	–
VPC-B30049	3000	1820 (409.2)	1347 (302.8)	1129 (253.9)	997 (224.1)	905 (203.3)	836 (187.9)	–	–	–	–
VPC-B3002A	4000	1820 (409.2)	1347 (302.8)	1129 (253.9)	997 (224.1)	905 (203.3)	836 (187.9)	782 (175.7)	737 (165.8)	–	–
VPC-B3003A	3500	1820 (409.2)	1347 (302.8)	1129 (253.9)	997 (224.1)	905 (203.3)	836 (187.9)	782 (175.7)	–	–	–
VPC-B3004A	3500	1820 (409.2)	1347 (302.8)	1129 (253.9)	997 (224.1)	905 (203.3)	836 (187.9)	782 (175.7)	–	–	–
VPC-B3004B	2800	1820 (409.2)	1347 (302.8)	1129 (253.9)	997 (224.1)	905 (203.3)	–	–	–	–	–
VPC-B3004D	4000	1820 (409.2)	1347 (302.8)	1129 (253.9)	997 (224.1)	905 (203.3)	836 (187.9)	782 (175.7)	737 (165.8)	–	–

(1) 1.0 N = 0.225 lb
(2) For Kinetix VPC bus overvoltage speed with and without a cooling fan, see Technical Specifications - Kinetix VPC Servo Motors on page 30.

Axial Load Force Ratings (zero radial load) for Non-brake Motors

Motor Cat. No. (1)	Maximum (2) Speed rpm	RPM									
		500 N (lb)	1000 N (lb)	1500 N (lb)	2000 N (lb)	2500 N (lb)	3000 N (lb)	3500 N (lb)	4000 N (lb)	4500 N (lb)	5000 N (lb)
VPC-B1652A	4500	2713 (610.0)	2008 (451.5)	1684 (378.6)	1486 (334.1)	1349 (303.3)	1246 (280.2)	1166 (262.1)	1100 (247.3)	1045 (235.0)	–
VPC-B1653A	4500	2713 (610.0)	2008 (451.5)	1684 (378.6)	1486 (334.1)	1349 (303.3)	1246 (280.2)	1166 (262.1)	1100 (247.3)	1045 (235.0)	–
VPC-B1652D	5000	2713 (610.0)	2008 (451.5)	1684 (378.6)	1486 (334.1)	1349 (303.3)	1246 (280.2)	1166 (262.1)	1100 (247.3)	1045 (235.0)	998 (224.5)
VPC-B1653D	5000	2713 (610.0)	2008 (451.5)	1684 (378.6)	1486 (334.1)	1349 (303.3)	1246 (280.2)	1166 (262.1)	1100 (247.3)	1045 (235.0)	998 (224.5)
VPC-B1654D	5000	2713 (610.0)	2008 (451.5)	1684 (378.6)	1486 (334.1)	1349 (303.3)	1246 (280.2)	1166 (262.1)	1100 (247.3)	1045 (235.0)	998 (224.5)
VPC-B21539	3000	3502 (787.3)	2592 (582.7)	2174 (488.6)	1918 (431.3)	1741 (391.4)	1609 (361.6)	–	–	–	–
VPC-B21549	3000	3502 (787.3)	2592 (582.7)	2174 (488.6)	1918 (431.3)	1741 (391.4)	1609 (361.6)	–	–	–	–
VPC-B2153A	4500	3502 (787.3)	2592 (582.7)	2174 (488.6)	1918 (431.3)	1741 (391.4)	1609 (361.6)	1505 (338.2)	1420 (319.2)	1349 (303.3)	–
VPC-B2154A	4500	3502 (787.3)	2592 (582.7)	2174 (488.6)	1918 (431.3)	1741 (391.4)	1609 (361.6)	1505 (338.2)	1420 (319.2)	1349 (303.3)	–
VPC-B2154B	3200	3502 (787.3)	2592 (582.7)	2174 (488.6)	1918 (431.3)	1741 (391.4)	1609 (361.6)	–	–	–	–
VPC-B2154D	5000	3502 (787.3)	2592 (582.7)	2174 (488.6)	1918 (431.3)	1741 (391.4)	1609 (361.6)	1505 (338.2)	1420 (319.2)	1349 (303.3)	1289 (289.7)
VPC-B2155B	3200	3502 (787.3)	2592 (582.7)	2174 (488.6)	1918 (431.3)	1741 (391.4)	1609 (361.6)	–	–	–	–
VPC-B2155D	5000	3502 (787.3)	2592 (582.7)	2174 (488.6)	1918 (431.3)	1741 (391.4)	1609 (361.6)	1505 (338.2)	1420 (319.2)	1349 (303.3)	1289 (289.7)
VPC-B2156A	2800	3502 (787.3)	2592 (582.7)	2174 (488.6)	1918 (431.3)	1741 (391.4)	–	–	–	–	–
VPC-B2156D	5000	3502 (787.3)	2592 (582.7)	2174 (488.6)	1918 (431.3)	1741 (391.4)	1609 (361.6)	1505 (338.2)	1420 (319.2)	1349 (303.3)	1289 (289.7)
VPC-B30029	3000	5329 (1198.0)	3944 (886.6)	3307 (743.5)	2919 (656.2)	2649 (595.6)	2448 (550.3)	–	–	–	–
VPC-B30039	3000	5329 (1198.0)	3944 (886.6)	3307 (743.5)	2919 (656.2)	2649 (595.6)	2448 (550.3)	–	–	–	–
VPC-B30049	3000	5329 (1198.0)	3944 (886.6)	3307 (743.5)	2919 (656.2)	2649 (595.6)	2448 (550.3)	–	–	–	–
VPC-B3002A	4000	5329 (1198.0)	3944 (886.6)	3307 (743.5)	2919 (656.2)	2649 (595.6)	2448 (550.3)	2289 (514.7)	2160 (485.7)	–	–
VPC-B3003A	3500	5329 (1198.0)	3944 (886.6)	3307 (743.5)	2919 (656.2)	2649 (595.6)	2448 (550.3)	2289 (514.7)	–	–	–
VPC-B3004A	3500	5329 (1198.0)	3944 (886.6)	3307 (743.5)	2919 (656.2)	2649 (595.6)	2448 (550.3)	2289 (514.7)	–	–	–
VPC-B3004B	2800	5329 (1198.0)	3944 (886.6)	3307 (743.5)	2919 (656.2)	2649 (595.6)	–	–	–	–	–
VPC-B3004D	4000	5329 (1198.0)	3944 (886.6)	3307 (743.5)	2919 (656.2)	2649 (595.6)	2448 (550.3)	2289 (514.7)	2160 (485.7)	–	–

(1) 1.0 N = 0.225 lb

(2) For Kinetix VPC bus overvoltage speed with and without a cooling fan, see Technical Specifications - Kinetix VPC Servo Motors on page 30.

Radial Load Force Ratings (maximum) for Brake Motors

Motor Cat. No. (1)	Maximum (2) Speed rpm	RPM									
		500 N (lb)	1000 N (lb)	1500 N (lb)	2000 N (lb)	2500 N (lb)	3000 N (lb)	3500 N (lb)	4000 N (lb)	4500 N (lb)	5000 N (lb)
VPC-B1652A	4500	2871 (645.5)	2279 (512.3)	1991 (447.6)	1809 (406.6)	1679 (377.5)	1580 (355.2)	1501 (337.4)	1436 (322.7)	1380 (310.3)	–
VPC-B1653A	4500	2952 (663.7)	2343 (526.7)	2047 (460.2)	1860 (418.1)	1726 (388.1)	1625 (365.2)	1543 (346.9)	1476 (331.8)	1419 (319.1)	–
VPC-B1652D	5000	2871 (645.5)	2279 (512.3)	1991 (447.6)	1809 (406.6)	1679 (377.5)	1580 (355.2)	1501 (337.4)	1436 (322.7)	1380 (310.3)	1333 (299.6)
VPC-B1653D	5000	2952 (663.7)	2343 (526.7)	2047 (460.2)	1860 (418.1)	1726 (388.1)	1625 (365.2)	1543 (346.9)	1476 (331.8)	1419 (319.1)	1370 (308.0)
VPC-B1654D	5000	3016 (678.1)	2394 (538.2)	2091 (470.2)	1900 (427.2)	1764 (396.5)	1660 (373.2)	1577 (354.5)	1508 (339.0)	1450 (326.0)	1400 (314.7)
VPC-B21539	3000	3941 (886.1)	3128 (703.3)	2733 (614.4)	2483 (558.2)	2305 (518.2)	2169 (487.6)	–	–	–	–
VPC-B21549	3000	4006 (900.6)	3180 (714.8)	2778 (624.4)	2524 (567.3)	2343 (526.7)	2205 (495.6)	–	–	–	–
VPC-B2153A	4500	3941 (886.1)	3128 (703.3)	2733 (614.4)	2483 (558.2)	2305 (518.2)	2169 (487.6)	2060 (463.2)	1971 (443.0)	1895 (426.0)	–
VPC-B2154A	4500	4006 (900.6)	3180 (714.8)	2778 (624.4)	2524 (567.3)	2343 (526.7)	2205 (495.6)	2094 (470.8)	2003 (450.3)	1926 (433.0)	–
VPC-B2154B	3200	4006 (900.6)	3180 (714.8)	2778 (624.4)	2524 (567.3)	2343 (526.7)	2205 (495.6)	–	–	–	–
VPC-B2154D	5000	4006 (900.6)	3180 (714.8)	2778 (624.4)	2524 (567.3)	2343 (526.7)	2205 (495.6)	2094 (470.8)	2003 (450.3)	1926 (433.0)	1859 (418.0)
VPC-B2155B	3200	4106 (923.0)	3259 (732.5)	2847 (639.9)	2586 (581.4)	2401 (539.7)	2259 (507.9)	–	–	–	–
VPC-B2155D	5000	4106 (923.0)	3259 (732.5)	2847 (639.9)	2586 (581.4)	2401 (539.7)	2259 (507.9)	2146 (482.5)	2053 (461.5)	1974 (443.7)	1906 (428.4)
VPC-B2156A	2800	4106 (923.0)	3259 (732.5)	2847 (639.9)	2586 (581.4)	2401 (539.7)	–	–	–	–	–
VPC-B2156D	5000	4106 (923.0)	3259 (732.5)	2847 (639.9)	2586 (581.4)	2401 (539.7)	2259 (507.9)	2146 (482.5)	2053 (461.5)	1974 (443.7)	1906 (428.4)
VPC-B30029	3000	5861 (1317.7)	4652 (1045.9)	4064 (913.6)	3692 (830.1)	3428 (770.6)	3226 (725.2)	–	–	–	–
VPC-B30039	3000	5990 (1346.5)	4754 (1068.7)	4153 (933.6)	3773 (848.3)	3503 (787.5)	3296 (741.0)	–	–	–	–
VPC-B30049	3000	6184 (1390.2)	4908 (1103.4)	4288 (963.9)	3896 (875.8)	3616 (813.0)	3403 (765.1)	–	–	–	–
VPC-B3002A	4000	5861 (1317.7)	4652 (1045.9)	4064 (913.6)	3692 (830.1)	3428 (770.6)	3226 (725.2)	3064 (688.8)	2931 (658.8)	–	–
VPC-B3003A	3500	5990 (1346.5)	4754 (1068.7)	4153 (933.6)	3773 (848.3)	3503 (787.5)	3296 (741.0)	3131 (703.9)	–	–	–
VPC-B3004A	3500	6184 (1390.2)	4908 (1103.4)	4288 (963.9)	3896 (875.8)	3616 (813.0)	3403 (765.1)	3233 (726.8)	–	–	–
VPC-B3004B	2800	6184 (1390.2)	4908 (1103.4)	4288 (963.9)	3896 (875.8)	3616 (813.0)	–	–	–	–	–
VPC-B3004D	4000	6184 (1390.2)	4908 (1103.4)	4288 (963.9)	3896 (875.8)	3616 (813.0)	3403 (765.1)	3233 (726.8)	3092 (695.1)	–	–

(1) 1.0 N = 0.225 lb

(2) For Kinetix VPC bus overvoltage speed with and without a cooling fan, see Technical Specifications - Kinetix VPC Servo Motors on page 30.

Axial Load Force Ratings (maximum radial load) for Brake Motors

Motor Cat. No. (1)	Maximum (2) Speed rpm	RPM									
		500 N (lb)	1000 N (lb)	1500 N (lb)	2000 N (lb)	2500 N (lb)	3000 N (lb)	3500 N (lb)	4000 N (lb)	4500 N (lb)	5000 N (lb)
VPC-B1652A	4500	927 (208.4)	686 (154.2)	575 (129.3)	508 (114.1)	461 (103.6)	426 (95.7)	398 (89.5)	376 (84.4)	357 (80.2)	–
VPC-B1653A	4500	927 (208.4)	686 (154.2)	575 (129.3)	508 (114.1)	461 (103.6)	426 (95.7)	398 (89.5)	376 (84.4)	357 (80.2)	–
VPC-B1652D	5000	927 (208.4)	686 (154.2)	575 (129.3)	508 (114.1)	461 (103.6)	426 (95.7)	398 (89.5)	376 (84.4)	357 (80.2)	341 (76.6)
VPC-B1653D	5000	927 (208.4)	686 (154.2)	575 (129.3)	508 (114.1)	461 (103.6)	426 (95.7)	398 (89.5)	376 (84.4)	357 (80.2)	341 (76.6)
VPC-B1654D	5000	927 (208.4)	686 (154.2)	575 (129.3)	508 (114.1)	461 (103.6)	426 (95.7)	398 (89.5)	376 (84.4)	357 (80.2)	341 (76.6)
VPC-B21539	3000	1196 (269.0)	885 (199.0)	742 (166.9)	655 (147.3)	594 (133.6)	549 (123.5)	–	–	–	–
VPC-B21549	3000	1196 (269.0)	885 (199.0)	742 (166.9)	655 (147.3)	594 (133.6)	549 (123.5)	–	–	–	–
VPC-B2153A	4500	1196 (269.0)	885 (199.0)	742 (166.9)	655 (147.3)	594 (133.6)	549 (123.5)	514 (115.5)	485 (109.0)	460 (103.5)	–
VPC-B2154A	4500	1196 (269.0)	885 (199.0)	742 (166.9)	655 (147.3)	594 (133.6)	549 (123.5)	514 (115.5)	485 (109.0)	460 (103.5)	–
VPC-B2154B	3200	1196 (269.0)	885 (199.0)	742 (166.9)	655 (147.3)	594 (133.6)	549 (123.5)	–	–	–	–
VPC-B2154D	5000	1196 (269.0)	885 (199.0)	742 (166.9)	655 (147.3)	594 (133.6)	549 (123.5)	514 (115.5)	485 (109.0)	460 (103.5)	440 (98.9)
VPC-B2155B	3200	1196 (269.0)	885 (199.0)	742 (166.9)	655 (147.3)	594 (133.6)	549 (123.5)	–	–	–	–
VPC-B2155D	5000	1196 (269.0)	885 (199.0)	742 (166.9)	655 (147.3)	594 (133.6)	549 (123.5)	514 (115.5)	485 (109.0)	460 (103.5)	440 (98.9)
VPC-B2156A	2800	1196 (269.0)	885 (199.0)	742 (166.9)	655 (147.3)	594 (133.6)	–	–	–	–	–
VPC-B2156D	5000	1196 (269.0)	885 (199.0)	742 (166.9)	655 (147.3)	594 (133.6)	549 (123.5)	514 (115.5)	485 (109.0)	460 (103.5)	440 (98.9)
VPC-B30029	3000	1820 (409.2)	1347 (302.8)	1129 (253.9)	997 (224.1)	905 (203.3)	836 (187.9)	–	–	–	–
VPC-B30039	3000	1820 (409.2)	1347 (302.8)	1129 (253.9)	997 (224.1)	905 (203.3)	836 (187.9)	–	–	–	–
VPC-B30049	3000	1820 (409.2)	1347 (302.8)	1129 (253.9)	997 (224.1)	905 (203.3)	836 (187.9)	–	–	–	–
VPC-B3002A	4000	1820 (409.2)	1347 (302.8)	1129 (253.9)	997 (224.1)	905 (203.3)	836 (187.9)	782 (175.7)	737 (165.8)	–	–
VPC-B3003A	3500	1820 (409.2)	1347 (302.8)	1129 (253.9)	997 (224.1)	905 (203.3)	836 (187.9)	782 (175.7)	–	–	–
VPC-B3004A	3500	1820 (409.2)	1347 (302.8)	1129 (253.9)	997 (224.1)	905 (203.3)	836 (187.9)	782 (175.7)	–	–	–
VPC-B3004B	2800	1820 (409.2)	1347 (302.8)	1129 (253.9)	997 (224.1)	905 (203.3)	–	–	–	–	–
VPC-B3004D	4000	1820 (409.2)	1347 (302.8)	1129 (253.9)	997 (224.1)	905 (203.3)	836 (187.9)	782 (175.7)	737 (165.8)	–	–

(1) 1.0 N = 0.225 lb
(2) For Kinetix VPC bus overvoltage speed with and without a cooling fan, see Technical Specifications - Kinetix VPC Servo Motors on page 30.

Axial Load Force Ratings (zero radial load) for Brake Motors

Motor Cat. No. (1)	Maximum (2) Speed rpm	RPM									
		500 N (lb)	1000 N (lb)	1500 N (lb)	2000 N (lb)	2500 N (lb)	3000 N (lb)	3500 N (lb)	4000 N (lb)	4500 N (lb)	5000 N (lb)
VPC-B1652A	4500	2713 (610.0)	2008 (451.5)	1684 (378.6)	1486 (334.1)	1349 (303.3)	1246 (280.2)	1166 (262.1)	1100 (247.3)	1045 (235.0)	–
VPC-B1653A	4500	2713 (610.0)	2008 (451.5)	1684 (378.6)	1486 (334.1)	1349 (303.3)	1246 (280.2)	1166 (262.1)	1100 (247.3)	1045 (235.0)	–
VPC-B1652D	5000	2713 (610.0)	2008 (451.5)	1684 (378.6)	1486 (334.1)	1349 (303.3)	1246 (280.2)	1166 (262.1)	1100 (247.3)	1045 (235.0)	998 (224.5)
VPC-B1653D	5000	2713 (610.0)	2008 (451.5)	1684 (378.6)	1486 (334.1)	1349 (303.3)	1246 (280.2)	1166 (262.1)	1100 (247.3)	1045 (235.0)	998 (224.5)
VPC-B1654D	5000	2713 (610.0)	2008 (451.5)	1684 (378.6)	1486 (334.1)	1349 (303.3)	1246 (280.2)	1166 (262.1)	1100 (247.3)	1045 (235.0)	998 (224.5)
VPC-B21539	3000	3502 (787.3)	2592 (582.7)	2174 (488.6)	1918 (431.3)	1741 (391.4)	1609 (361.6)	–	–	–	–
VPC-B21549	3000	3502 (787.3)	2592 (582.7)	2174 (488.6)	1918 (431.3)	1741 (391.4)	1609 (361.6)	–	–	–	–
VPC-B2153A	4500	3502 (787.3)	2592 (582.7)	2174 (488.6)	1918 (431.3)	1741 (391.4)	1609 (361.6)	1505 (338.2)	1420 (319.2)	1349 (303.3)	–
VPC-B2154A	4500	3502 (787.3)	2592 (582.7)	2174 (488.6)	1918 (431.3)	1741 (391.4)	1609 (361.6)	1505 (338.2)	1420 (319.2)	1349 (303.3)	–
VPC-B2154B	3200	3502 (787.3)	2592 (582.7)	2174 (488.6)	1918 (431.3)	1741 (391.4)	1609 (361.6)	–	–	–	–
VPC-B2154D	5000	3502 (787.3)	2592 (582.7)	2174 (488.6)	1918 (431.3)	1741 (391.4)	1609 (361.6)	1505 (338.2)	1420 (319.2)	1349 (303.3)	1289 (289.7)
VPC-B2155B	3200	3502 (787.3)	2592 (582.7)	2174 (488.6)	1918 (431.3)	1741 (391.4)	1609 (361.6)	–	–	–	–
VPC-B2155D	5000	3502 (787.3)	2592 (582.7)	2174 (488.6)	1918 (431.3)	1741 (391.4)	1609 (361.6)	1505 (338.2)	1420 (319.2)	1349 (303.3)	1289 (289.7)
VPC-B2156A	2800	3502 (787.3)	2592 (582.7)	2174 (488.6)	1918 (431.3)	1741 (391.4)	–	–	–	–	–
VPC-B2156D	5000	3502 (787.3)	2592 (582.7)	2174 (488.6)	1918 (431.3)	1741 (391.4)	1609 (361.6)	1505 (338.2)	1420 (319.2)	1349 (303.3)	1289 (289.7)
VPC-B30029	3000	5329 (1198.0)	3944 (886.6)	3307 (743.5)	2919 (656.2)	2649 (595.6)	2448 (550.3)	–	–	–	–
VPC-B30039	3000	5329 (1198.0)	3944 (886.6)	3307 (743.5)	2919 (656.2)	2649 (595.6)	2448 (550.3)	–	–	–	–
VPC-B30049	3000	5329 (1198.0)	3944 (886.6)	3307 (743.5)	2919 (656.2)	2649 (595.6)	2448 (550.3)	–	–	–	–
VPC-B3002A	4000	5329 (1198.0)	3944 (886.6)	3307 (743.5)	2919 (656.2)	2649 (595.6)	2448 (550.3)	2289 (514.7)	2160 (485.7)	–	–
VPC-B3003A	3500	5329 (1198.0)	3944 (886.6)	3307 (743.5)	2919 (656.2)	2649 (595.6)	2448 (550.3)	2289 (514.7)	–	–	–
VPC-B3004A	3500	5329 (1198.0)	3944 (886.6)	3307 (743.5)	2919 (656.2)	2649 (595.6)	2448 (550.3)	2289 (514.7)	–	–	–
VPC-B3004B	2800	5329 (1198.0)	3944 (886.6)	3307 (743.5)	2919 (656.2)	2649 (595.6)	–	–	–	–	–
VPC-B3004D	4000	5329 (1198.0)	3944 (886.6)	3307 (743.5)	2919 (656.2)	2649 (595.6)	2448 (550.3)	2289 (514.7)	2160 (485.7)	–	–

(1) 1.0 N = 0.225 lb
(2) For Kinetix VPC bus overvoltage speed with and without a cooling fan, see Technical Specifications - Kinetix VPC Servo Motors on page 30.

Kinetix VPC Servo Motors (40,000 hours bearing-fatigue life)

Radial Load Force Ratings (maximum) for Non-brake Motors

Motor Cat. No. (1)	Maximum (2) Speed rpm	RPM									
		500 N (lb)	1000 N (lb)	1500 N (lb)	2000 N (lb)	2500 N (lb)	3000 N (lb)	3500 N (lb)	4000 N (lb)	4500 N (lb)	5000 N (lb)
VPC-B1652A	4500	2158 (485.2)	1713 (385.1)	1496 (336.4)	1359 (305.6)	1262 (283.7)	1188 (267.0)	1128 (253.6)	1079 (242.6)	1037 (233.2)	–
VPC-B1653A	4500	2279 (512.3)	1809 (406.6)	1580 (355.2)	1436 (322.7)	1333 (299.6)	1254 (281.9)	1191 (267.8)	1139 (256.2)	1096 (246.3)	–
VPC-B1652D	5000	2158 (485.2)	1713 (385.1)	1496 (336.4)	1359 (305.6)	1262 (283.7)	1188 (267.0)	1128 (253.6)	1079 (242.6)	1037 (233.2)	1002 (225.2)
VPC-B1653D	5000	2279 (512.3)	1809 (406.6)	1580 (355.2)	1436 (322.7)	1333 (299.6)	1254 (281.9)	1191 (267.8)	1139 (256.2)	1096 (246.3)	1058 (237.8)
VPC-B1654D	5000	2343 (526.7)	1860 (418.1)	1625 (365.2)	1476 (331.8)	1370 (308.0)	1289 (289.9)	1225 (275.4)	1172 (263.4)	1126 (253.2)	1088 (244.5)
VPC-B21539	3000	2987 (671.5)	2371 (533.0)	2071 (465.6)	1882 (423.0)	1747 (392.7)	1644 (369.6)	–	–	–	–
VPC-B21549	3000	3066 (689.2)	2433 (547.0)	2126 (477.8)	1931 (434.1)	1793 (403.0)	1687 (379.3)	–	–	–	–
VPC-B2153A	4500	2987 (671.5)	2371 (533.0)	2071 (465.6)	1882 (423.0)	1747 (392.7)	1644 (369.6)	1562 (351.0)	1494 (335.8)	1436 (322.8)	–
VPC-B2154A	4500	3066 (689.2)	2433 (547.0)	2126 (477.8)	1931 (434.1)	1793 (403.0)	1687 (379.3)	1603 (360.3)	1533 (344.6)	1474 (331.3)	–
VPC-B2154B	3200	3066 (689.2)	2433 (547.0)	2126 (477.8)	1931 (434.1)	1793 (403.0)	1687 (379.3)	–	–	–	–
VPC-B2154D	5000	3066 (689.2)	2433 (547.0)	2126 (477.8)	1931 (434.1)	1793 (403.0)	1687 (379.3)	1603 (360.3)	1533 (344.6)	1474 (331.3)	1423 (319.9)
VPC-B2155B	3200	3128 (703.3)	2483 (558.2)	2169 (487.6)	1971 (443.0)	1829 (411.3)	1722 (387.0)	–	–	–	–
VPC-B2155D	5000	3128 (703.3)	2483 (558.2)	2169 (487.6)	1971 (443.0)	1829 (411.3)	1722 (387.0)	1635 (367.6)	1564 (351.6)	1504 (338.1)	1452 (326.4)
VPC-B2156A	2800	3180 (714.8)	2524 (567.3)	2205 (495.6)	2003 (450.3)	1859 (418.0)	–	–	–	–	–
VPC-B2156D	5000	3180 (714.8)	2524 (567.3)	2205 (495.6)	2003 (450.3)	1859 (418.0)	1750 (393.4)	1662 (373.7)	1590 (357.4)	1529 (343.6)	1476 (331.8)
VPC-B30029	3000	4526 (1017.5)	3592 (807.6)	3138 (705.5)	2851 (641.0)	2647 (595.0)	2491 (559.9)	–	–	–	–
VPC-B30039	3000	4526 (1017.5)	3592 (807.6)	3138 (705.5)	2851 (641.0)	2647 (595.0)	2491 (559.9)	–	–	–	–
VPC-B30049	3000	4652 (1045.9)	3692 (830.1)	3226 (725.2)	2931 (658.8)	2721 (611.6)	2560 (575.6)	–	–	–	–
VPC-B3002A	4000	4526 (1017.5)	3592 (807.6)	3138 (705.5)	2851 (641.0)	2647 (595.0)	2491 (559.9)	2366 (531.9)	2263 (508.7)	–	–
VPC-B3003A	3500	4526 (1017.5)	3592 (807.6)	3138 (705.5)	2851 (641.0)	2647 (595.0)	2491 (559.9)	2366 (531.9)	–	–	–
VPC-B3004A	3500	4652 (1045.9)	3692 (830.1)	3226 (725.2)	2931 (658.8)	2721 (611.6)	2560 (575.6)	2432 (546.7)	–	–	–
VPC-B3004B	2800	4652 (1045.9)	3692 (830.1)	3226 (725.2)	2931 (658.8)	2721 (611.6)	–	–	–	–	–
VPC-B3004D	4000	4652 (1045.9)	3692 (830.1)	3226 (725.2)	2931 (658.8)	2721 (611.6)	2560 (575.6)	2432 (546.7)	2326 (522.9)	–	–

(1) 1.0 N = 0.225 lb
(2) For Kinetix VPC bus overvoltage speed with and without a cooling fan, see Technical Specifications - Kinetix VPC Servo Motors on page 30.

Axial Load Force Ratings (maximum radial load) for Non-brake Motors

Motor Cat. No. (1)	Maximum (2) Speed rpm	RPM									
		500 N (lb)	1000 N (lb)	1500 N (lb)	2000 N (lb)	2500 N (lb)	3000 N (lb)	3500 N (lb)	4000 N (lb)	4500 N (lb)	5000 N (lb)
VPC-B1652A	4500	686 (154.2)	508 (114.1)	426 (95.7)	376 (84.4)	341 (76.6)	315 (70.8)	294 (66.2)	278 (62.5)	264 (59.4)	–
VPC-B1653A	4500	686 (154.2)	508 (114.1)	426 (95.7)	376 (84.4)	341 (76.6)	315 (70.8)	294 (66.2)	278 (62.5)	264 (59.4)	–
VPC-B1652D	5000	686 (154.2)	508 (114.1)	426 (95.7)	376 (84.4)	341 (76.6)	315 (70.8)	294 (66.2)	278 (62.5)	264 (59.4)	252 (56.7)
VPC-B1653D	5000	686 (154.2)	508 (114.1)	426 (95.7)	376 (84.4)	341 (76.6)	315 (70.8)	294 (66.2)	278 (62.5)	264 (59.4)	252 (56.7)
VPC-B1654D	5000	686 (154.2)	508 (114.1)	426 (95.7)	376 (84.4)	341 (76.6)	315 (70.8)	294 (66.2)	278 (62.5)	264 (59.4)	252 (56.7)
VPC-B21539	3000	885 (199.0)	655 (147.3)	549 (123.5)	485 (109.0)	440 (98.9)	406 (91.4)	–	–	–	–
VPC-B21549	3000	885 (199.0)	655 (147.3)	549 (123.5)	485 (109.0)	440 (98.9)	406 (91.4)	–	–	–	–
VPC-B2153A	4500	885 (199.0)	655 (147.3)	549 (123.5)	485 (109.0)	440 (98.9)	406 (91.4)	380 (85.4)	359 (80.6)	341 (76.6)	–
VPC-B2154A	4500	885 (199.0)	655 (147.3)	549 (123.5)	485 (109.0)	440 (98.9)	406 (91.4)	380 (85.4)	359 (80.6)	341 (76.6)	–
VPC-B2154B	3200	885 (199.0)	655 (147.3)	549 (123.5)	485 (109.0)	440 (98.9)	406 (91.4)	–	–	–	–
VPC-B2154D	5000	885 (199.0)	655 (147.3)	549 (123.5)	485 (109.0)	440 (98.9)	406 (91.4)	380 (85.4)	359 (80.6)	341 (76.6)	325 (73.2)
VPC-B2155B	3200	885 (199.0)	655 (147.3)	549 (123.5)	485 (109.0)	440 (98.9)	406 (91.4)	–	–	–	–
VPC-B2155D	5000	885 (199.0)	655 (147.3)	549 (123.5)	485 (109.0)	440 (98.9)	406 (91.4)	380 (85.4)	359 (80.6)	341 (76.6)	325 (73.2)
VPC-B2156A	2800	885 (199.0)	655 (147.3)	549 (123.5)	485 (109.0)	440 (98.9)	–	–	–	–	–
VPC-B2156D	5000	885 (199.0)	655 (147.3)	549 (123.5)	485 (109.0)	440 (98.9)	406 (91.4)	380 (85.4)	359 (80.6)	341 (76.6)	325 (73.2)
VPC-B30029	3000	1347 (302.8)	997 (224.1)	836 (187.9)	737 (165.8)	669 (150.5)	618 (139.0)	–	–	–	–
VPC-B30039	3000	1347 (302.8)	997 (224.1)	836 (187.9)	737 (165.8)	669 (150.5)	618 (139.0)	–	–	–	–
VPC-B30049	3000	1347 (302.8)	997 (224.1)	836 (187.9)	737 (165.8)	669 (150.5)	618 (139.0)	–	–	–	–
VPC-B3002A	4000	1347 (302.8)	997 (224.1)	836 (187.9)	737 (165.8)	669 (150.5)	618 (139.0)	578 (130.0)	546 (122.7)	–	–
VPC-B3003A	3500	1347 (302.8)	997 (224.1)	836 (187.9)	737 (165.8)	669 (150.5)	618 (139.0)	578 (130.0)	–	–	–
VPC-B3004A	3500	1347 (302.8)	997 (224.1)	836 (187.9)	737 (165.8)	669 (150.5)	618 (139.0)	578 (130.0)	–	–	–
VPC-B3004B	2800	1347 (302.8)	997 (224.1)	836 (187.9)	737 (165.8)	669 (150.5)	–	–	–	–	–
VPC-B3004D	4000	1347 (302.8)	997 (224.1)	836 (187.9)	737 (165.8)	669 (150.5)	618 (139.0)	578 (130.0)	546 (122.7)	–	–

(1) 1.0 N = 0.225 lb
(2) For Kinetix VPC bus overvoltage speed with and without a cooling fan, see Technical Specifications - Kinetix VPC Servo Motors on page 30.

Axial Load Force Ratings (zero radial load) for Non-brake Motors

Motor Cat. No. (1)	Maximum (2) Speed rpm	RPM									
		500 N (lb)	1000 N (lb)	1500 N (lb)	2000 N (lb)	2500 N (lb)	3000 N (lb)	3500 N (lb)	4000 N (lb)	4500 N (lb)	5000 N (lb)
VPC-B1652A	4500	2008 (451.5)	1486 (334.1)	1246 (280.2)	1100 (247.3)	998 (224.5)	922 (207.4)	863 (194.0)	814 (183.0)	774 (173.9)	–
VPC-B1653A	4500	2008 (451.5)	1486 (334.1)	1246 (280.2)	1100 (247.3)	998 (224.5)	922 (207.4)	863 (194.0)	814 (183.0)	774 (173.9)	–
VPC-B1652D	5000	2008 (451.5)	1486 (334.1)	1246 (280.2)	1100 (247.3)	998 (224.5)	922 (207.4)	863 (194.0)	814 (183.0)	774 (173.9)	739 (166.1)
VPC-B1653D	5000	2008 (451.5)	1486 (334.1)	1246 (280.2)	1100 (247.3)	998 (224.5)	922 (207.4)	863 (194.0)	814 (183.0)	774 (173.9)	739 (166.1)
VPC-B1654D	5000	2008 (451.5)	1486 (334.1)	1246 (280.2)	1100 (247.3)	998 (224.5)	922 (207.4)	863 (194.0)	814 (183.0)	774 (173.9)	739 (166.1)
VPC-B21539	3000	2592 (582.7)	1918 (431.3)	1609 (361.6)	1420 (319.2)	1289 (289.7)	1191 (267.7)	–	–	–	–
VPC-B21549	3000	2592 (582.7)	1918 (431.3)	1609 (361.6)	1420 (319.2)	1289 (289.7)	1191 (267.7)	–	–	–	–
VPC-B2153A	4500	2592 (582.7)	1918 (431.3)	1609 (361.6)	1420 (319.2)	1289 (289.7)	1191 (267.7)	1114 (250.3)	1051 (236.2)	998 (224.4)	–
VPC-B2154A	4500	2592 (582.7)	1918 (431.3)	1609 (361.6)	1420 (319.2)	1289 (289.7)	1191 (267.7)	1114 (250.3)	1051 (236.2)	998 (224.4)	–
VPC-B2154B	3200	2592 (582.7)	1918 (431.3)	1609 (361.6)	1420 (319.2)	1289 (289.7)	1191 (267.7)	–	–	–	–
VPC-B2154D	5000	2592 (582.7)	1918 (431.3)	1609 (361.6)	1420 (319.2)	1289 (289.7)	1191 (267.7)	1114 (250.3)	1051 (236.2)	998 (224.4)	954 (214.4)
VPC-B2155B	3200	2592 (582.7)	1918 (431.3)	1609 (361.6)	1420 (319.2)	1289 (289.7)	1191 (267.7)	–	–	–	–
VPC-B2155D	5000	2592 (582.7)	1918 (431.3)	1609 (361.6)	1420 (319.2)	1289 (289.7)	1191 (267.7)	1114 (250.3)	1051 (236.2)	998 (224.4)	954 (214.4)
VPC-B2156A	2800	2592 (582.7)	1918 (431.3)	1609 (361.6)	1420 (319.2)	1289 (289.7)	–	–	–	–	–
VPC-B2156D	5000	2592 (582.7)	1918 (431.3)	1609 (361.6)	1420 (319.2)	1289 (289.7)	1191 (267.7)	1114 (250.3)	1051 (236.2)	998 (224.4)	954 (214.4)
VPC-B30029	3000	3944 (886.6)	2919 (656.2)	2448 (550.3)	2160 (485.7)	1961 (440.8)	1812 (407.3)	–	–	–	–
VPC-B30039	3000	3944 (886.6)	2919 (656.2)	2448 (550.3)	2160 (485.7)	1961 (440.8)	1812 (407.3)	–	–	–	–
VPC-B30049	3000	3944 (886.6)	2919 (656.2)	2448 (550.3)	2160 (485.7)	1961 (440.8)	1812 (407.3)	–	–	–	–
VPC-B3002A	4000	3944 (886.6)	2919 (656.2)	2448 (550.3)	2160 (485.7)	1961 (440.8)	1812 (407.3)	1694 (380.9)	1599 (359.4)	–	–
VPC-B3003A	3500	3944 (886.6)	2919 (656.2)	2448 (550.3)	2160 (485.7)	1961 (440.8)	1812 (407.3)	1694 (380.9)	–	–	–
VPC-B3004A	3500	3944 (886.6)	2919 (656.2)	2448 (550.3)	2160 (485.7)	1961 (440.8)	1812 (407.3)	1694 (380.9)	–	–	–
VPC-B3004B	2800	3944 (886.6)	2919 (656.2)	2448 (550.3)	2160 (485.7)	1961 (440.8)	–	–	–	–	–
VPC-B3004D	4000	3944 (886.6)	2919 (656.2)	2448 (550.3)	2160 (485.7)	1961 (440.8)	1812 (407.3)	1694 (380.9)	1599 (359.4)	–	–

(1) 1.0 N = 0.225 lb
(2) For Kinetix VPC bus overvoltage speed with and without a cooling fan, see Technical Specifications - Kinetix VPC Servo Motors on page 30.

Radial Load Force Ratings (maximum) for Brake Motors

Motor Cat. No. (1)	Maximum (2) Speed rpm	RPM									
		500 N (lb)	1000 N (lb)	1500 N (lb)	2000 N (lb)	2500 N (lb)	3000 N (lb)	3500 N (lb)	4000 N (lb)	4500 N (lb)	5000 N (lb)
VPC-B1652A	4500	2279 (512.3)	1809 (406.6)	1580 (355.2)	1436 (322.7)	1333 (299.6)	1254 (281.9)	1191 (267.8)	1139 (256.2)	1096 (246.3)	–
VPC-B1653A	4500	2343 (526.7)	1860 (418.1)	1625 (365.2)	1476 (331.8)	1370 (308.0)	1289 (289.9)	1225 (275.4)	1172 (263.4)	1126 (253.2)	–
VPC-B1652D	5000	2279 (512.3)	1809 (406.6)	1580 (355.2)	1436 (322.7)	1333 (299.6)	1254 (281.9)	1191 (267.8)	1139 (256.2)	1096 (246.3)	1058 (237.8)
VPC-B1653D	5000	2343 (526.7)	1860 (418.1)	1625 (365.2)	1476 (331.8)	1370 (308.0)	1289 (289.9)	1225 (275.4)	1172 (263.4)	1126 (253.2)	1088 (244.5)
VPC-B1654D	5000	2394 (538.2)	1900 (427.2)	1660 (373.2)	1508 (339.0)	1400 (314.7)	1317 (296.2)	1251 (281.3)	1197 (269.1)	1151 (258.7)	1111 (249.8)
VPC-B21539	3000	3128 (703.3)	2483 (558.2)	2169 (487.6)	1971 (443.0)	1829 (411.3)	1722 (387.0)	–	–	–	–
VPC-B21549	3000	3180 (714.8)	2524 (567.3)	2205 (495.6)	2003 (450.3)	1859 (418.0)	1750 (393.4)	–	–	–	–
VPC-B2153A	4500	3128 (703.3)	2483 (558.2)	2169 (487.6)	1971 (443.0)	1829 (411.3)	1722 (387.0)	1635 (367.6)	1564 (351.6)	1504 (338.1)	–
VPC-B2154A	4500	3180 (714.8)	2524 (567.3)	2205 (495.6)	2003 (450.3)	1859 (418.0)	1750 (393.4)	1662 (373.7)	1590 (357.4)	1529 (343.6)	–
VPC-B2154B	3200	3180 (714.8)	2524 (567.3)	2205 (495.6)	2003 (450.3)	1859 (418.0)	1750 (393.4)	–	–	–	–
VPC-B2154D	5000	3180 (714.8)	2524 (567.3)	2205 (495.6)	2003 (450.3)	1859 (418.0)	1750 (393.4)	1662 (373.7)	1590 (357.4)	1529 (343.6)	1476 (331.8)
VPC-B2155B	3200	3259 (732.5)	2586 (581.4)	2259 (507.9)	2053 (461.5)	1906 (428.4)	1793 (403.1)	–	–	–	–
VPC-B2155D	5000	3259 (732.5)	2586 (581.4)	2259 (507.9)	2053 (461.5)	1906 (428.4)	1793 (403.1)	1703 (382.9)	1629 (366.3)	1567 (352.2)	1512 (340.0)
VPC-B2156A	2800	3259 (732.5)	2586 (581.4)	2259 (507.9)	2053 (461.5)	1906 (428.4)	–	–	–	–	–
VPC-B2156D	5000	3259 (732.5)	2586 (581.4)	2259 (507.9)	2053 (461.5)	1906 (428.4)	1793 (403.1)	1703 (382.9)	1629 (366.3)	1567 (352.2)	1512 (340.0)
VPC-B30029	3000	4652 (1045.9)	3692 (830.1)	3226 (725.2)	2931 (658.8)	2721 (611.6)	2560 (575.6)	–	–	–	–
VPC-B30039	3000	4754 (1068.7)	3773 (848.3)	3296 (741.0)	2995 (673.3)	2780 (625.0)	2616 (588.2)	–	–	–	–
VPC-B30049	3000	4908 (1103.4)	3896 (875.8)	3403 (765.1)	3092 (695.1)	2870 (645.3)	2701 (607.2)	–	–	–	–
VPC-B3002A	4000	4652 (1045.9)	3692 (830.1)	3226 (725.2)	2931 (658.8)	2721 (611.6)	2560 (575.6)	2432 (546.7)	2326 (522.9)	–	–
VPC-B3003A	3500	4754 (1068.7)	3773 (848.3)	3296 (741.0)	2995 (673.3)	2780 (625.0)	2616 (588.2)	2485 (558.7)	–	–	–
VPC-B3004A	3500	4908 (1103.4)	3896 (875.8)	3403 (765.1)	3092 (695.1)	2870 (645.3)	2701 (607.2)	2566 (576.8)	–	–	–
VPC-B3004B	2800	4908 (1103.4)	3896 (875.8)	3403 (765.1)	3092 (695.1)	2870 (645.3)	–	–	–	–	–
VPC-B3004D	4000	4908 (1103.4)	3896 (875.8)	3403 (765.1)	3092 (695.1)	2870 (645.3)	2701 (607.2)	2566 (576.8)	2454 (551.7)	–	–

(1) 1.0 N = 0.225 lb

(2) For Kinetix VPC bus overvoltage speed with and without a cooling fan, see Technical Specifications - Kinetix VPC Servo Motors on page 30.

Axial Load Force Ratings (maximum radial load) for Brake Motors

Motor Cat. No. (1)	Maximum (2) Speed rpm	RPM									
		500 N (lb)	1000 N (lb)	1500 N (lb)	2000 N (lb)	2500 N (lb)	3000 N (lb)	3500 N (lb)	4000 N (lb)	4500 N (lb)	5000 N (lb)
VPC-B1652A	4500	686 (154.2)	508 (114.1)	426 (95.7)	376 (84.4)	341 (76.6)	315 (70.8)	294 (66.2)	278 (62.5)	264 (59.4)	–
VPC-B1653A	4500	686 (154.2)	508 (114.1)	426 (95.7)	376 (84.4)	341 (76.6)	315 (70.8)	294 (66.2)	278 (62.5)	264 (59.4)	–
VPC-B1652D	5000	686 (154.2)	508 (114.1)	426 (95.7)	376 (84.4)	341 (76.6)	315 (70.8)	294 (66.2)	278 (62.5)	264 (59.4)	252 (56.7)
VPC-B1653D	5000	686 (154.2)	508 (114.1)	426 (95.7)	376 (84.4)	341 (76.6)	315 (70.8)	294 (66.2)	278 (62.5)	264 (59.4)	252 (56.7)
VPC-B1654D	5000	686 (154.2)	508 (114.1)	426 (95.7)	376 (84.4)	341 (76.6)	315 (70.8)	294 (66.2)	278 (62.5)	264 (59.4)	252 (56.7)
VPC-B21539	3000	885 (199.0)	655 (147.3)	549 (123.5)	485 (109.0)	440 (98.9)	406 (91.4)	–	–	–	–
VPC-B21549	3000	885 (199.0)	655 (147.3)	549 (123.5)	485 (109.0)	440 (98.9)	406 (91.4)	–	–	–	–
VPC-B2153A	4500	885 (199.0)	655 (147.3)	549 (123.5)	485 (109.0)	440 (98.9)	406 (91.4)	380 (85.4)	359 (80.6)	341 (76.6)	–
VPC-B2154A	4500	885 (199.0)	655 (147.3)	549 (123.5)	485 (109.0)	440 (98.9)	406 (91.4)	380 (85.4)	359 (80.6)	341 (76.6)	–
VPC-B2154B	3200	885 (199.0)	655 (147.3)	549 (123.5)	485 (109.0)	440 (98.9)	406 (91.4)	–	–	–	–
VPC-B2154D	5000	885 (199.0)	655 (147.3)	549 (123.5)	485 (109.0)	440 (98.9)	406 (91.4)	380 (85.4)	359 (80.6)	341 (76.6)	325 (73.2)
VPC-B2155B	3200	885 (199.0)	655 (147.3)	549 (123.5)	485 (109.0)	440 (98.9)	406 (91.4)	–	–	–	–
VPC-B2155D	5000	885 (199.0)	655 (147.3)	549 (123.5)	485 (109.0)	440 (98.9)	406 (91.4)	380 (85.4)	359 (80.6)	341 (76.6)	325 (73.2)
VPC-B2156A	2800	885 (199.0)	655 (147.3)	549 (123.5)	485 (109.0)	440 (98.9)	–	–	–	–	–
VPC-B2156D	5000	885 (199.0)	655 (147.3)	549 (123.5)	485 (109.0)	440 (98.9)	406 (91.4)	380 (85.4)	359 (80.6)	341 (76.6)	325 (73.2)
VPC-B30029	3000	1347 (302.8)	997 (224.1)	836 (187.9)	737 (165.8)	669 (150.5)	618 (139.0)	–	–	–	–
VPC-B30039	3000	1347 (302.8)	997 (224.1)	836 (187.9)	737 (165.8)	669 (150.5)	618 (139.0)	–	–	–	–
VPC-B30049	3000	1347 (302.8)	997 (224.1)	836 (187.9)	737 (165.8)	669 (150.5)	618 (139.0)	–	–	–	–
VPC-B3002A	4000	1347 (302.8)	997 (224.1)	836 (187.9)	737 (165.8)	669 (150.5)	618 (139.0)	578 (130.0)	546 (122.7)	–	–
VPC-B3003A	3500	1347 (302.8)	997 (224.1)	836 (187.9)	737 (165.8)	669 (150.5)	618 (139.0)	578 (130.0)	–	–	–
VPC-B3004A	3500	1347 (302.8)	997 (224.1)	836 (187.9)	737 (165.8)	669 (150.5)	618 (139.0)	578 (130.0)	–	–	–
VPC-B3004B	2800	1347 (302.8)	997 (224.1)	836 (187.9)	737 (165.8)	669 (150.5)	–	–	–	–	–
VPC-B3004D	4000	1347 (302.8)	997 (224.1)	836 (187.9)	737 (165.8)	669 (150.5)	618 (139.0)	578 (130.0)	546 (122.7)	–	–

(1) 1.0 N = 0.225 lb
(2) For Kinetix VPC bus overvoltage speed with and without a cooling fan, see Technical Specifications - Kinetix VPC Servo Motors on page 30.

Axial Load Force Ratings (zero radial load) for Brake Motors

Motor Cat. No.[1]	Maximum[2] Speed rpm	RPM									
		500 N (lb)	**1000** N (lb)	**1500** N (lb)	**2000** N (lb)	**2500** N (lb)	**3000** N (lb)	**3500** N (lb)	**4000** N (lb)	**4500** N (lb)	**5000** N (lb)
VPC-B1652A	4500	2008 (451.5)	1486 (334.1)	1246 (280.2)	1100 (247.3)	998 (224.5)	922 (207.4)	863 (194.0)	814 (183.0)	774 (173.9)	–
VPC-B1653A	4500	2008 (451.5)	1486 (334.1)	1246 (280.2)	1100 (247.3)	998 (224.5)	922 (207.4)	863 (194.0)	814 (183.0)	774 (173.9)	–
VPC-B1652D	5000	2008 (451.5)	1486 (334.1)	1246 (280.2)	1100 (247.3)	998 (224.5)	922 (207.4)	863 (194.0)	814 (183.0)	774 (173.9)	739 (166.1)
VPC-B1653D	5000	2008 (451.5)	1486 (334.1)	1246 (280.2)	1100 (247.3)	998 (224.5)	922 (207.4)	863 (194.0)	814 (183.0)	774 (173.9)	739 (166.1)
VPC-B1654D	5000	2008 (451.5)	1486 (334.1)	1246 (280.2)	1100 (247.3)	998 (224.5)	922 (207.4)	863 (194.0)	814 (183.0)	774 (173.9)	739 (166.1)
VPC-B21539	3000	2592 (582.7)	1918 (431.3)	1609 (361.6)	1420 (319.2)	1289 (289.7)	1191 (267.7)	–	–	–	–
VPC-B21549	3000	2592 (582.7)	1918 (431.3)	1609 (361.6)	1420 (319.2)	1289 (289.7)	1191 (267.7)	–	–	–	–
VPC-B2153A	4500	2592 (582.7)	1918 (431.3)	1609 (361.6)	1420 (319.2)	1289 (289.7)	1191 (267.7)	1114 (250.3)	1051 (236.2)	998 (224.4)	–
VPC-B2154A	4500	2592 (582.7)	1918 (431.3)	1609 (361.6)	1420 (319.2)	1289 (289.7)	1191 (267.7)	1114 (250.3)	1051 (236.2)	998 (224.4)	–
VPC-B2154B	3200	2592 (582.7)	1918 (431.3)	1609 (361.6)	1420 (319.2)	1289 (289.7)	1191 (267.7)	–	–	–	–
VPC-B2154D	5000	2592 (582.7)	1918 (431.3)	1609 (361.6)	1420 (319.2)	1289 (289.7)	1191 (267.7)	1114 (250.3)	1051 (236.2)	998 (224.4)	954 (214.4)
VPC-B2155B	3200	2592 (582.7)	1918 (431.3)	1609 (361.6)	1420 (319.2)	1289 (289.7)	1191 (267.7)	–	–	–	–
VPC-B2155D	5000	2592 (582.7)	1918 (431.3)	1609 (361.6)	1420 (319.2)	1289 (289.7)	1191 (267.7)	1114 (250.3)	1051 (236.2)	998 (224.4)	954 (214.4)
VPC-B2156A	2800	2592 (582.7)	1918 (431.3)	1609 (361.6)	1420 (319.2)	1289 (289.7)	–	–	–	–	–
VPC-B2156D	5000	2592 (582.7)	1918 (431.3)	1609 (361.6)	1420 (319.2)	1289 (289.7)	1191 (267.7)	1114 (250.3)	1051 (236.2)	998 (224.4)	954 (214.4)
VPC-B30029	3000	3944 (886.6)	2919 (656.2)	2448 (550.3)	2160 (485.7)	1961 (440.8)	1812 (407.3)	–	–	–	–
VPC-B30039	3000	3944 (886.6)	2919 (656.2)	2448 (550.3)	2160 (485.7)	1961 (440.8)	1812 (407.3)	–	–	–	–
VPC-B30049	3000	3944 (886.6)	2919 (656.2)	2448 (550.3)	2160 (485.7)	1961 (440.8)	1812 (407.3)	–	–	–	–
VPC-B3002A	4000	3944 (886.6)	2919 (656.2)	2448 (550.3)	2160 (485.7)	1961 (440.8)	1812 (407.3)	1694 (380.9)	1599 (359.4)	–	–
VPC-B3003A	3500	3944 (886.6)	2919 (656.2)	2448 (550.3)	2160 (485.7)	1961 (440.8)	1812 (407.3)	1694 (380.9)	–	–	–
VPC-B3004A	3500	3944 (886.6)	2919 (656.2)	2448 (550.3)	2160 (485.7)	1961 (440.8)	1812 (407.3)	1694 (380.9)	–	–	–
VPC-B3004B	2800	3944 (886.6)	2919 (656.2)	2448 (550.3)	2160 (485.7)	1961 (440.8)	–	–	–	–	–
VPC-B3004D	4000	3944 (886.6)	2919 (656.2)	2448 (550.3)	2160 (485.7)	1961 (440.8)	1812 (407.3)	1694 (380.9)	1599 (359.4)	–	–

(1) 1.0 N = 0.225 lb
(2) For Kinetix VPC bus overvoltage speed with and without a cooling fan, see Technical Specifications - Kinetix VPC Servo Motors on page 30.

Notes:

Dimensions - Kinetix VPC Servo Motors

VPC-B165xx, VPC-B215xx, and VPC-B300xx Motor Dimensions (single motor connector, with fan)

Dimensions are in mm (in.)

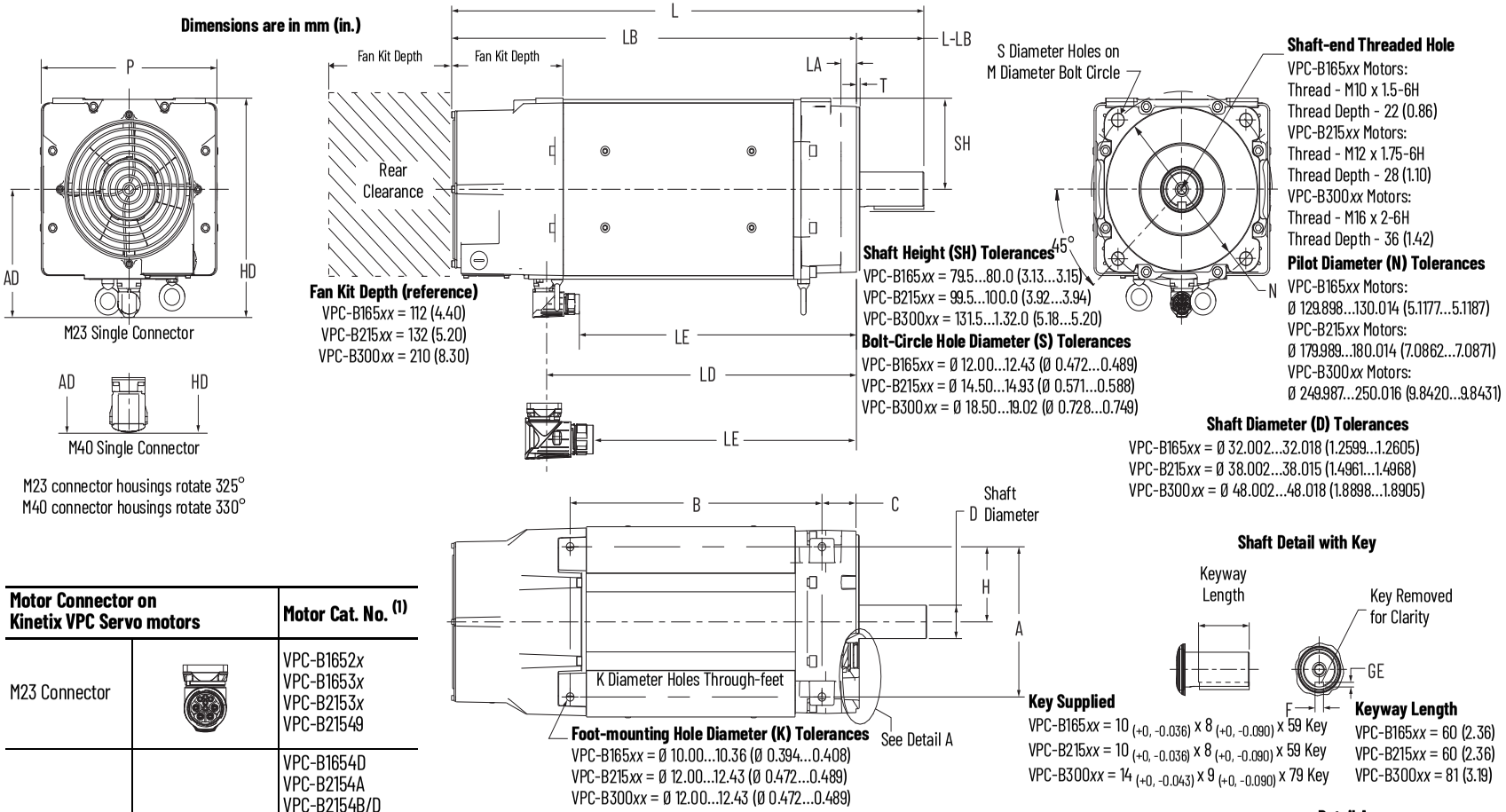

Motor Connector on Kinetix VPC Servo motors		Motor Cat. No. (1)
M23 Connector		VPC-B1652*x* VPC-B1653*x* VPC-B2153*x* VPC-B21549
M40 Connector	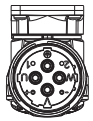	VPC-B1654D VPC-B2154A VPC-B2154B/D VPC-B2155B/D VPC-B2156A/D VPC-B30029 VPC-B3002A VPC-B30039 VPC-B3003A VPC-B30049

(1) Catalog numbers B/ and A/ represent rated speed for the fanless motor. /D represents rated speed for the fan motor.

Shaft, Pilot, and Keyway Tolerances	VPC-B165xx	VPC-B215xx	VPC-B300xx
Shaft Runout (T.I.R.)	0.05 (0.002)		
Pilot Eccentricity (T.I.R.)	0.10 (0.0039)		
Max Face Runout (T.I.R.)	0.10 (0.0039)		0.125 (0.0049)
Keyway Depth (GE)	5.0...5.2 (0.197...0.205)		5.5...5.7 (0.216...0.224)
Keyway Width (F)	9.964...10.000 (0.3923...0.3937		13.957...14.000 (0.5495...0.5512)

VPC-B165xx, VPC-B215xx, and VPC-B300xx Motor Dimensions (single motor connector)

Motor Cat. No. (1)	AD mm (in.)	HD mm (in.)	T (4) mm (in.)	LA mm (in.)	LD (2) mm (in.)	LE (2) mm (in.)	L (2) mm (in.)	LB (2) mm (in.)	L-LB (3) mm (in.)	A mm (in.)	B (2) mm (in.)	C mm (in.)	H mm (in.)	D (4) mm (in.)	M (4) mm (in.)	SH (4) mm (in.)	S (4) mm (in.)	K (4) mm (in.)	N (4) mm (in.)	P mm (in.)	GE (4) mm (in.)	F (4) mm (in.)
VPC-B1652x	120.5 (4.75)	200.3 (7.89)	3.5 (0.14)	14.3 (0.56)	251.9 (9.92)	211.9 (8.34)	427.6 (16.83)	347.6 (13.69)	80.0 (3.15)	125.0 (4.92)	216.9 (8.54)	34.0 (1.34)	62.5 (2.46)	32.00 (1.260)	165.00 (6.496)	80.00 (3.15)	12.00 (0.472)	10.00 (0.394)	130.00 (5.118)	168.9 (6.65)	5.00 (0.198)	10.00 (0.394)
VPC-B1653x					307.4 (12.10)	267.4 (10.53)	483.1 (19.02)	403.1 (15.87)			272.4 (10.72)											
VPC-B1654D	140.0 (5.51)	219.8 (8.65)			352.1 (13.86)	281.1 (11.07)	523.6 (20.61)	443.6 (17.46)			312.9 (12.32)											
VPC-B2153x	140.5 (5.53)	240.5 (9.47)	4.0 (0.16)	18.4 (0.72)	328.4 (12.93)	288.5 (11.36)	520.1 (20.48)	440.1 (17.33)	80.0 (3.15)	160.0 (6.30)	284.9 (11.22)	43.0 (1.69)	80.0 (3.15)	38.00 (1.496)	215.00 (8.465)	100.00 (3.94)	14.50 (0.571)	12.00 (0.472)	180.00 (7.087)	210.9 (8.30)	5.00 (0.198)	10.00 (0.394)
VPC-B21549					368.9 (14.52)	329.0 (12.95)	560.6 (22.07)	480.6 (18.92)			325.4 (12.81)											
VPC-B2154A	160.5 (6.32)	260.5 (10.25)				297.9 (11.73)																
VPC-B2154B/D																						
VPC-B2155B/D					409.4 (16.12)	338.4 (13.32)	601.1 (23.67)	521.1 (20.52)			365.9 (14.41)											
VPC-B2156A/D					449.9 (17.71)	378.9 (14.92)	641.6 (25.26)	561.6 (22.11)			406.4 (16.00)											
VPC-B3002x	192.0 (7.56)	324.0 (12.75)	5.0 (0.20)	22.9 (0.90)	400.7 (15.78)	329.7 (12.98)	692.1 (27.23)	582.1 (22.92)	110.0 (4.33)	216.0 (8.50)	344.7 (13.57)	53.0 (2.09)	108.0 (4.25)	48.00 (1.890)	300.00 (11.811)	132.00 (5.20)	18.50 (0.728)	12.00 (0.472)	250.00 (9.843)	275.9 (10.86)	5.50 (0.217)	14.00 (0.551)
VPC-B3003x																						
VPC-B30049					448.2 (17.65)	377.2 (14.85)	739.6 (29.12)	629.6 (24.79)			392.2 (15.44)											

(1) Catalog numbers /B and /A represent rated speed for the fanless motor. D/ represents rated speed for the fan motor.
(2) If ordering VPC-B1652x motors with brake, add 55.5 mm (2.19 in.) to dimension L, LB, LE, LD and B.
If ordering VPC-B1653x or VPC-B1654D motors with brake, add 40.5 mm (1.59 in.) to dimension L, LB, LE, LD and B.
If ordering VPC-B2153x, VPC-B2154x, or VPC-B2156A/D motors with brake, add 81.0 mm (3.19 in.) to dimension L, LB, LE, LD and B.
If ordering VPC-B2155B/D motors with brake, add 121.5 mm (4.78 in.) to dimension L, LB, LE, LD and B.
If ordering VPC-B3002x motors with brake, add 47.5 mm (1.87 in.) to dimension L, LB, LE, LD and B.
If ordering VPC-B3003x motors with brake, add 95.0 mm (3.74 in.) to dimension L, LB, LE, LD and B.
If ordering VPC-B3004x motors with brake, add 142.5 mm (5.61 in.) to dimension L, LB, LE, LD and B.
(3) Tolerance for this dimension is ±0.7 mm (±0.028 in.).
(4) For shaft diameter, mounting hole diameter, pilot diameter, and keyway tolerances, see the figure on page 46.

Motors are designed to metric dimensions. Inch dimensions are approximate conversions from millimeters. Dimensions without tolerances are for reference.

VPC-B165xx, VPC-B215xx, and VPC-B300xx Motor Dimensions (motor power/feedback connectors, with fan)

Dimensions are in mm (in.)

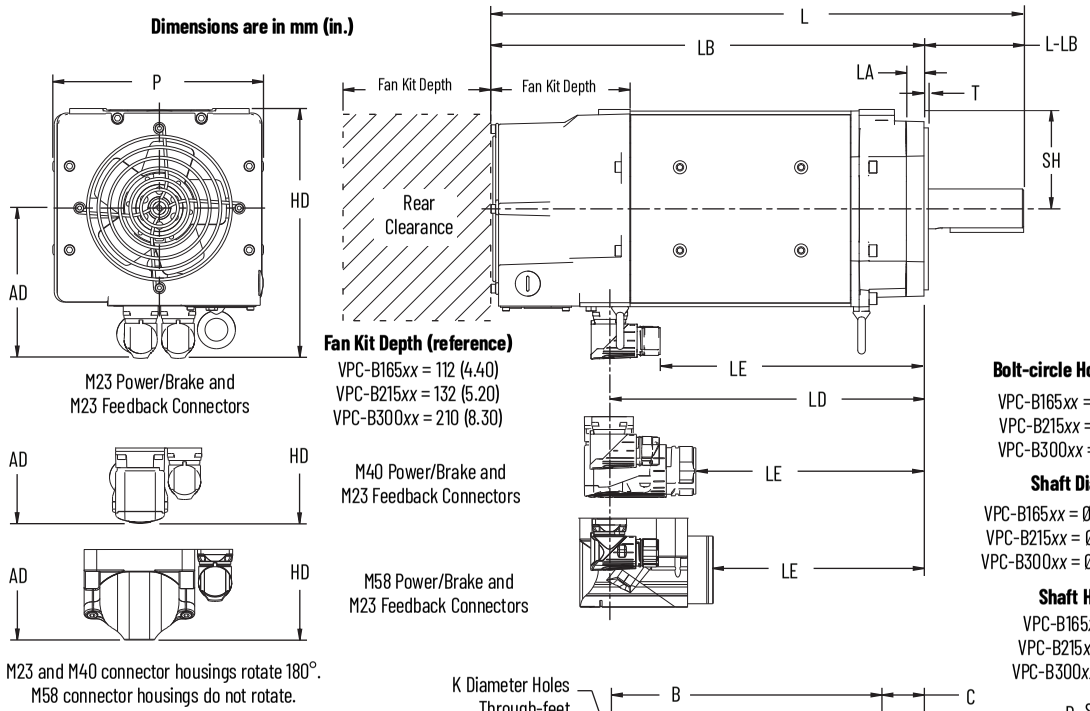

Fan Kit Depth (reference)
VPC-B165xx = 112 (4.40)
VPC-B215xx = 132 (5.20)
VPC-B300xx = 210 (8.30)

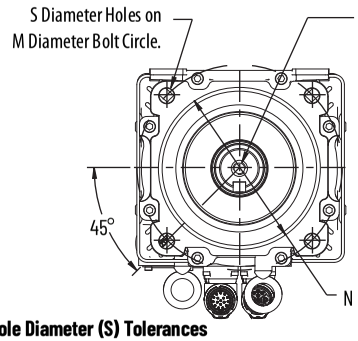

Shaft-end Threaded Hole
VPC-B165xx Motors:
Thread - M10 x 1.5-6H
Thread Depth - 22 (0.86)
VPC-B215xx Motors:
Thread - M12 x 1.75-6H
Thread Depth - 28 (1.10)
VPC-B300xx Motors:
Thread - M16 x 2.0-6H
Thread Depth - 36 (1.42)

Pilot Diameter (N) Tolerances
VPC-B165xx Motors:
Ø 129.989...130.014 (5.1177...5.1187)
VPC-B215xx Motors:
Ø 179.989...180.014 (7.0862...7.0871)
VPC-B300xx Motors:
Ø 249.987...250.016 (9.8420...9.8431)

Bolt-circle Hole Diameter (S) Tolerances
VPC-B165xx = Ø 12.00...12.43 (0.472...0.489)
VPC-B215xx = Ø 14.50...14.93 (0.571...0.588)
VPC-B300xx = Ø 18.50...19.02 (0.728...0.749)

Shaft Diameter (D) Tolerances
VPC-B165xx = Ø 32.018...32.002 (1.2605...1.2599)
VPC-B215xx = Ø 38.018...38.002 (1.4968...1.4961)
VPC-B300xx = Ø 48.018...48.002 (1.8905...1.8898)

Shaft Height (SH) Tolerances
VPC-B165xx = 79.5...80.0 (3.13...3.15)
VPC-B215xx = 99.5...100.0 (3.92...3.94)
VPC-B300xx = 131.5...1.32.0 (5.18...5.20)

Shaft Detail with Key

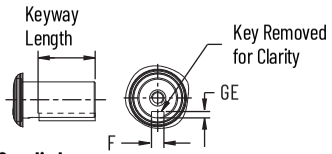

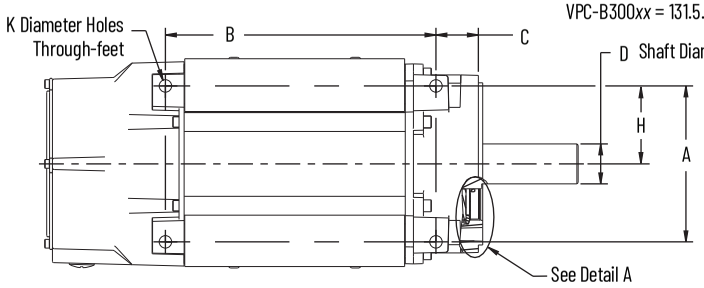

Key Supplied
VPC-B165xx = 10 (+0, -0.036) x 8 (+0, -0.090) x 59 Key
VPC-B215xx = 10 (+0, -0.036) x 8 (+0, -0.090) x 59 Key
VPC-B300xx = 14 (+0, -0.043) x 9 (+0, -0.090) x 79 Key

Keyway Length
VPC-B165xx = 60.0 (2.36)
VPC-B215xx = 60.0 (2.36)
VPC-B300xx = 81.0 (3.19)

Foot-mounting Hole Diameter (K) Tolerances
VPC-B165xx = Ø 10.00...10.36 (0.394...0.408)
VPC-B215xx = Ø 12.00...12.43 (0.472...0.489)
VPC-B300xx = Ø 12.00...12.43 (0.472...0.489)

Detail A

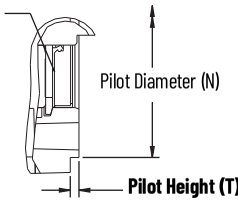

Shaft Seal
Refer to page 6 for Kinetix VPC motor shaft-seal kit information.

Pilot Height (T) Tolerances
VPC-B165xx = 2.5...3.5 (0.098...0.138)
VPC-B215xx = 3.0...4.0 (0.118...0.157)
VPC-B300xx = 3.5...5.0 (0.138...0.197)

Power/Brake Connectors on Kinetix VPC Servo Motors		Motor Cat. No. (1)
M23 Connector		VPC-B1652x VPC-B1653x VPC-B2153x VPC-B21549
M40 Connector	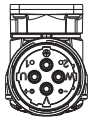	VPC-B1654D VPC-B2154A VPC-B2154B/D VPC-B2155B/D VPC-B2156A/D VPC-B3002x VPC-B3003x VPC-B30049
M58 Connector	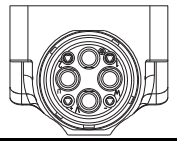	VPC-B3004A VPC-B3004D/B

(1) Catalog numbers B/ and A/ represent rated speed for the fanless motor. /D represents rated speed for the fan motor.

Shaft, Pilot, and Keyway Tolerances	VPC-B165xx	VPC-B215xx	VPC-B300xx
Shaft Runout (T.I.R.)	0.05 (0.002)		
Pilot Eccentricity (T.I.R.)	0.10 (0.0039)		
Max Face Runout (T.I.R.)	0.10 (0.0039)		0.125 (0.0049)
Keyway Depth (GE)	5.00...5.20 (0.197...0.205)		5.50...5.70 (0.216...0.224)
Keyway Width (F)	9.964...10.000 (0.3927...0.3937)		13.957...14.000 (0.5495...0.5512)

VPC-B165xx, VPC-B215xx, and VPC-B300xx Motor Dimensions (motor power/feedback connectors)

Motor Cat. No. (1)	AD mm (in.)	HD mm (in.)	T (4) mm (in.)	LA mm (in.)	LD (2) mm (in.)	LE (2) mm (in.)	L (2) mm (in.)	LB (2) mm (in.)	L-LB (3) mm (in.)	A mm (in.)	B (2) mm (in.)	C mm (in.)	H mm (in.)	D (4) mm (in.)	M (4) mm (in.)	SH (4) mm (in.)	S (4) mm (in.)	K (4) mm (in.)	N (4) mm (in.)	P mm (in.)	GE (4) mm (in.)	F (4) mm (in.)
VPC-B1652x	120.5 (4.75)	200.3 (7.89)	3.5 (0.14)	14.3 (0.56)	251.9 (9.92)	211.9 (8.34)	427.6 (16.83)	347.6 (13.69)	80.0 (3.15)	125.0 (4.92)	216.9 (8.54)	34.0 (1.34)	62.5 (2.46)	32.0 (1.260)	165.0 (6.496)	80.00 (3.15)	12.00 (0.472)	10.00 (0.394)	130.0 (5.118)	168.9 (6.65)	5.00 (0.198)	10.00 (0.394)
VPC-B1653x					307.4 (12.10)	267.4 (10.53)	483.1 (19.02)	403.1 (15.87)			272.4 (10.72)											
VPC-B1654D	140.0 (5.51)	219.9 (8.66)			352.1 (13.86)	281.1 (11.07)	523.6 (20.61)	443.6 (17.46)			312.9 (12.32)											
VPC-B2153x	140.5 (5.53)	240.5 (9.47)	4.0 (0.16)	18.4 (0.72)	328.4 (12.93)	288.5 (11.40)	520.1 (20.48)	440.1 (17.33)	80.0 (3.15)	160.0 (6.30)	284.9 (11.22)	43.0 (1.69)	80.00 (3.15)	38.00 (1.496)	215.00 (8.465)	100.00 (3.94)	14.50 (0.571)	12.00 (0.472)	180.00 (7.087)	210.9 (8.30)	5.00 (0.198)	10.00 (0.394)
VPC-B21549					368.9 (14.52)	329.0 (12.95)	560.6 (22.07)	480.6 (18.92)			325.4 (12.81)											
VPC-B2154A	160.1 (6.30)	260.1 (10.24)				297.9 (11.73)																
VPC-B2154B/D																						
VPC-B2155B/D					409.4 (16.12)	338.4 (13.32)	601.1 (23.67)	521.1 (20.52)			365.9 (14.41)											
VPC-B2156A/D					449.9 (17.71)	378.9 (14.92)	641.6 (25.26)	561.6 (22.11)			406.4 (16.00)											
VPC-B3002x	192.0 (7.56)	324.0 (12.76)	5.0 (0.20)	22.9 (0.90)	400.7 (15.78)	329.7 (12.98)	692.1 (27.23)	582.1 (22.92)	110.0 (4.33)	216.0 (8.50)	344.7 (13.57)	53.0 (2.09)	108.0 (4.25)	48.00 (1.890)	300.00 (11.811)	132.00 (5.20)	18.50 (0.728)	12.00 (0.472)	250.00 (9.843)	275.9 (10.86)	5.50 (0.217)	14.00 (0.551)
VPC-B3003x																						
VPC-B30049					448.2 (17.65)	377.2 (14.85)	739.6 (29.12)	629.6 (24.79)			392.2 (15.44)											
VPC-B3004A	203.3 (8.00)	335.3 (13.20)				400.2 (15.76)																
VPC-B3004B/D																						

(1) Catalog numbers /B and /A represent rated speed for the fanless motor. D/ represents rated speed for the fan motor.
(2) If ordering VPC-B1652x motors with brake, add 55.5 mm (2.19 in.) to dimension L, LB, LE, LD and B.
If ordering VPC-B1653x or VPC-B1654D motors with brake, add 40.5 mm (1.59 in.) to dimension L, LB, LE, LD and B.
If ordering VPC-B2153x, VPC-B2154x or VPC-B2156A/D motors with brake, add 81.0 mm (3.19 in.) to dimension L, LB, LE, LD and B.
If ordering VPC-B2155B/D motors with brake, add 121.5 mm (4.78 in.) to dimension L, LB, LE, LD and B.
If ordering VPC-B3002x motors with brake, add 47.5 mm (1.87 in.) to dimension L, LB, LE, LD and B.
If ordering VPC-B3003x motors with brake, add 95.0 mm (3.74 in.) to dimension L, LB, LE, LD and B.
If ordering VPC-B3004x motors with brake, add 142.5 mm (5.61 in.) to dimension L, LB, LE, LD and B.
(3) Tolerance for this dimension is ±0.7 mm (±0.028 in.).
(4) For shaft diameter, mounting hole diameter, pilot diameter, and keyway tolerances, see the figure on page 48.

Motors are designed to metric dimensions. Inch dimensions are approximate conversions from millimeters. Dimensions without tolerances are for reference.

VPC-B165xx, VPC-B215xx, and VPC-B300xx Motor Dimensions (without fan)

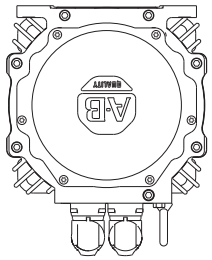

M23 Power/Brake and
M23 Feedback Connectors

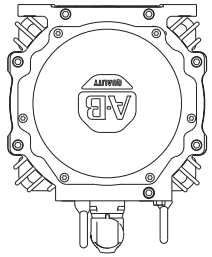

M23 Single Connector

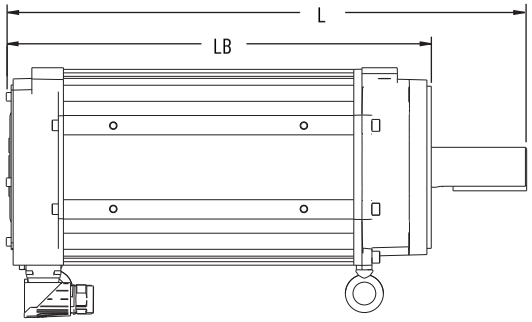

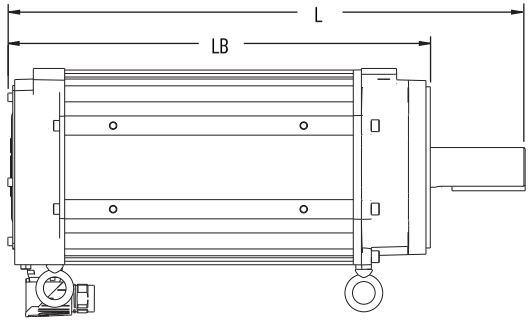

Dimensions are in mm (in.)

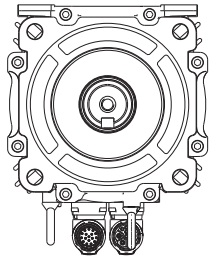

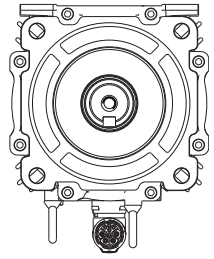

Motor Cat. No. (1)	L (2) mm (in.)	LB (2) mm (in.)
VPC-B1652x	361.7 (14.24)	281.7 (11.09)
VPC-B1653x	417.2 (16.43)	337.2 (13.27)
VPC-B1654D	457.7 (18.02)	377.7 (14.87)
VPC-B2153x	434.0 (17.09)	354.0 (13.93)
VPC-B21549	474.5 (18.68)	394.5 (15.53)
VPC-B2154A		
VPC-B2154B/D		

Motor Cat. No.	L (2) mm (in.)	LB (2) mm (in.)
VPC-B2155B/D	515.0 (20.28)	435.0 (17.13)
VPC-B2156A/D	555.5 (21.87)	475.5 (18.72)
VPC-B3002x	578.8 (22.79)	468.8 (18.46)
VPC-B3003x	578.6 (22.78)	468.6 (18.45)
VPC-B30049	626.3 (24.66)	516.3 (20.32)
VPC-B3004A		
VPC-B3004D/B		

(1) Catalog numbers B/ and A/ represent rated speed for the fanless motor. /D represents rated speed for the fan motor.
(2) If ordering VPC-B1652x motors with brake, add 55.5 mm (2.19 in.) to dimension L and LB.
If ordering VPC-B1653x or VPC-B1654D motors with brake, add 40.5 mm (1.59 in.) to dimension L and LB.
If ordering VPC-B2153x, VPC-B2154x or VPC-B2156A/D motors with brake, add 81.0 mm (3.19 in.) to dimension L and LB.
If ordering VPC-B2155B/D motors with brake, add 121.5 mm (4.78 in.) to dimension L and LB.
If ordering VPC-B3002x motors with brake, add 47.5 mm (1.87 in.) to dimension L and LB.
If ordering VPC-B3003x motors with brake, add 95.0 mm (3.74 in.) to dimension L and LB.
If ordering VPC-B3004x motors with brake, add 142.5 mm (5.61 in.) to dimension L and LB.

Kinetix VPF Food-grade Servo Motors



Kinetix VPF servo motors combine the characteristics of the Kinetix VPL servo motors with features specifically designed to meet the unique needs of many food and beverage applications. Windings are matched to the ratings of Kinetix 5500 drives, Kinetix 5700 dual-axis inverters, and ArmorKinetix DSD modules to optimize system sizing, lower system cost, and improve energy efficiency. The Kinetix 2090 single cable design between motor and drive simplifies installation. These high-performance servo motors address the challenges of food environments by incorporating food-grade paint and shaft seal, along with noncorrosive fasteners and stainless steel shaft.

Kinetix VPF Servo Motor Features

Attribute	Value
Main characteristics	• Configurable winding options, brakes, and encoder feedback • Developed to match the ratings of Kinetix 5500 drives and Kinetix 5700 dual-axis inverters • Kinetix 2090 single cable technology • Hiperface DSL encoder protocol • Low rotor inertia
Features	• Food-grade epoxy coated • 200V and 400V-class windings • Single-turn and multi-turn absolute feedback • SIL 2 (PLd) rated encoder options • High-energy rare-earth magnets • Shaft end threaded hole • SpeedTec DIN connector, rotates 315° • Standard IEC 72-1 mounting dimensions
Motor type	Brushless AC synchronous servo motors
Environmental rating	• IP66/IP67 with shaft seal (standard) and use of Rockwell Automation factory-delivered Kinetix 2090 cables • Food grade grease on shaft seal
Certifications	Kinetix VPF rotary motors are UL Recognized components to applicable UL and CSA standards. CE and UK marked for all applicable directives. Refer to rok.auto/certifications for the Product Certifications website.
Continuous stall torque	0.93…19 N•m (8…172 lb•in)
Peak stall torque	2.69…49 N•m (24…430 lb•in)
Rated speed	Up to 8000 rpm
Motor rated output	0.34…4.18 kW (0.46…5.60 Hp)
Compatible servo drives	• Kinetix 5700 • Kinetix 5500 • ArmorKinetix DSD
Compatible servo cables	• 2090-CS*x*M1*xx*-*xx*AA/AF*xx* (TPE) cables • 2090-CS*x*M1*xx*-*xx*VA/LF*xx* (PVC and PUR) cables • 2090-CSBM1P7-14AF*xx* (PUR) cables
Typical applications	• Food packaging • Volumetric filling • Form, fill, seal • Food handling • For meat and poultry applications, the Kinetix VPS stainless-steel motors are recommended

Catalog Numbers - Kinetix VPF Servo Motors

Catalog numbers consist of various characters, each of which identifies a specific option for that component. Use the catalog numbering table chart below to understand the configuration of your motor. For questions regarding product availability, contact your Allen-Bradley distributor.

VP F - x xxx x x - x J 1 x A F

Factory Options
F= Food-grade shaft seal

Mounting Flange
A = IEC metric, free mounting holes (type FF)

Brake
2 = No brake
4 = 24V DC holding brake

Connector
1 = Single SpeedTec DIN connector, right angle, 315° rotatable

Shaft Key
J = Shaft key

Feedback
C = 18-bit absolute single-turn digital encoder (Hiperface DSL protocol)
P = 18-bit absolute multi-turn digital encoder (Hiperface DSL protocol)
W = 18-bit absolute multi-turn digital encoder (Hiperface DSL protocol) SIL 2 (PLd) rated, 9-bit secondary safety channel (1)
Q = 23-bit absolute multi-turn digital encoder (Hiperface DSL protocol) SIL 2 (PLd) rated, 12-bit secondary safety channel (2)

Rated Speed (3) (4)

A = 1500 rpm	D = 3000 rpm	M= 6000 rpm
B = 2000 rpm	E = 3500 rpm	T = 6750 rpm
C = 2500 rpm	F = 4500 rpm	U = 8000 rpm

Magnet Stack Length (1, 2, 3, 4 stacks) (4)

Frame Size - Bolt Circle Diameter (BCD)

063 = 63 mm	115 = 115 mm
075 = 75 mm	130 = 130 mm
100 = 100 mm	165 = 165 mm

Voltage Class
A = 200V
B = 400V

Series Type
F = Food grade enclosure (including food-grade shaft seal)

Series
VP = Permanent magnet rotary servo motors that are optimized to Kinetix 5500 and Kinetix 5700 drive ratings

(1) This encoder option is available with only VPF-B063*xx* and VPF-B075*xx* motor frame sizes.
(2) This encoder option is available with only VPF-A/B100*xx*, VPF-A/B115*xx*, VPF-A/B130*xx*, and VPF-B165*xx* motor frame sizes.
(3) Rated speed hierarchy is only for comparative purposes. Use Motion Analyzer software to size and select motors for your application, and/or the torque/speed curves in the Kinetix 5500 Drive System Design Guide, publication KNX-RM009, and the Kinetix 5700 Drive System Design Guide, publication KNX-RM010.
(4) Not all combinations are available. Only the configurations for rated speed and magnet stack length, as listed in Kinetix VPF Servo Motor (200V-class) Performance Specifications on page 55 and Kinetix VPF Servo Motor (400V-class) Performance Specifications on page 56, are available. Use Motion Analyzer software to size and select motors for your application.

Kinetix VPF Servo Motor High-resolution Encoders

Kinetix VPF servo motors are available with high performance encoders with a choice of single-turn (-C), multi-turn (-P), and SIL 2 rated (-Q and -W) high-resolution feedback:

- 18-bit resolution for 262,144 counts per revolution (choice of single-turn or multi-turn)
  - Single-turn encoder (-C) provides absolute position feedback within one turn
  - Multi-turn encoder (-P) provides absolute position feedback within 4096 turns
  - Electromechanical design does not require a battery.
- SIL 2 rated absolute multi-turn digital encoder (Hiperface DSL protocol)
  - 23-bit resolution for 8,388,608 counts per revolution, multi-turn absolute position feedback within 4096 turns (-Q) option has 12-bit secondary safety channel
  - 18-bit resolution for 262,144 multi-turn absolute position feedback within 4096 turns (-W) option has 9-bit secondary safety channel

Kinetix 2090 Single Cable Technology

Motor connectivity reduced to a single connector and cable

- Single cable eliminates hardware and wire terminations
- Purely digital two-wire communication integrated into the motor power cable
- TPE cable material for standard (non-flex) and continuous-flex cable
- PVC cable material for standard (non-flex) and Halogen-free PUR continuous-flex cable
- 2090-CSxM1Dx cables are available in 1.0 m (3.2 ft) increments up to 50 m (164 ft) for Kinetix 5500 drives, 90 m (295 ft) for Kinetix 5700 drives
- 2090-CSBM1P7-14AFxx are available in 1 m (3.2 ft) increments up to 4 m (13.1 ft) for ArmorKinetix DSD modules

IMPORTANT Due to the unique characteristics of single cable technology, designed for and tested with Kinetix 5500 drives, Kinetix 5700 dual-axis inverters, ArmorKinetix DSD modules, and Kinetix VP servo motors, building your own cables or using third-party cable is not an option.

Motor Connector/Cable Compatibility

Kinetix VPF servo motors are equipped with SpeedTec DIN connectors.

Single SpeedTec DIN Connector

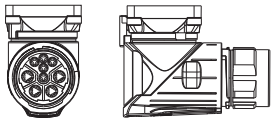

- VPF-A/B063*xxx*...VPF-B165*xxx* motors
- Receives only single cable plugs
- Attach cable plug with one-quarter turn

SpeedTec DIN (M1) Single Cable Plug

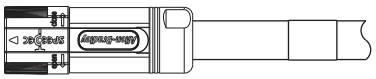

- 2090-CSBM1DF-*xx*AA*xx* (standard, non-flex) power/feedback/brake cables
- 2090-CSWM1DF-*xx*AA*xx* (standard, non-flex) power/feedback cables
- 2090-CSBM1DF-*xx*AF*xx* (continuous-flex) power/feedback/brake cables
- 2090-CSBM1DE-*xxx*A*xx* (standard, non-flex) power/feedback/brake cables
- 2090-CSWM1DE-*xxx*A*xx* (standard, non-flex) power/feedback cables
- 2090-CSBM1DE-*xxx*F*xx* (continuous-flex) power/feedback/brake cables
- 2090-CSBM1DG-*xxx*A*xx* (standard, non-flex) power/feedback/brake cables
- 2090-CSWM1DG-*xxv*A*xx* (standard, non-flex) power/feedback cables
- 2090-CSBM1DG-*xxx*F*xx* (continuous-flex) power/feedback/brake cables

- 2090-CSxM1DF cables apply to Kinetix 5500 drives
- 2090-CSxM1DE cables apply to Kinetix 5700 drives
- 2090-CSxM1DG cables apply to Kinetix 5500 or Kinetix 5700 drives
- 2090-CSBM1P7 cables apply to ArmorKinetix DSD modules



2090-CSBM1P7-14AF*xx* ArmorKinetix motor power/feedback cable

For Kinetix 2090 single motor cable specifications and ArmorKinetix hybrid cable specifications, refer to Kinetix Rotary and Linear Motion Cable Specifications Technical Data, publication KNX-TD004.

Kinetix VPF Servo Motor Options

Kinetix VPF servo motors are available with these configurable options:

- Single-turn or multi-turn encoder.
- 24V DC holding brake.
- Positive Air Pressure kit (catalog number VPF-AIR-PURGE) is mounted on the feedback connector to provide positive air pressure to further reduce the chance of contamination inside the motor.

  Refer to the Kinetix VPF Food-grade Servo Motors Installation Instructions, publication VPF-IN001, for more information.
- Shaft seal kits are food-grade, available for field replacement, and include a food-grade lubricant to reduce wear.

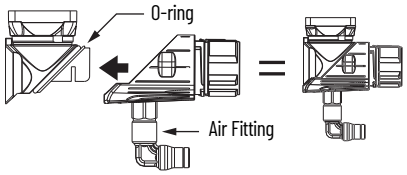

IMPORTANT Shaft seals are subject to wear and require periodic inspection and replacement. Replacement is recommended every 3 months, not to exceed 12 months, depending on use.

Shaft Seal Kit Catalog Numbers

Motor Cat. No.	Shaft Seal Kit Cat. No.	Shaft Seal Material
VPF-A063*xx* and VPF-B063*xx*	VPF-SSN-F063075	Teflon
VPF-A075*xx* and VPF-B075*xx*		
VPF-A100*xx* and VPF-B100*xx*	MPF-SST-A3B3	PTFE
VPF-A115*xx* and VPF-B115*xx*	MPF-SST-A4B4	
VPF-A130*xx* and VPF-B130*xx*	MPF-SST-A45B45	
VPF-B165*xx*	MPF-SST-F165	

Technical Specifications - Kinetix VPF Servo Motors

Kinetix VPF Servo Motor (200V-class) Performance Specifications

Motor Cat. No.	Rated Speed rpm	Maximum Speed rpm	Continuous Stall Torque N•m (lb•in)	Peak Stall Torque N•m (lb•in)	Motor Rated Output kW (Hp)	Rotor Inertia (1) kg-m^2 (lb•in•s^2)	Motor Weight, (1) approx kg (lb)
VPF-A0632F	4800	4800	0.93 (8.0)	2.69 (24.0)	0.36 (0.48)	0.0000170 (0.00015)	1.36 (3.0)
VPF-A0633C	3000	3000	1.27 (11.0)	4.09 (36.0)	0.37 (0.50)	0.0000247 (0.00022)	1.68 (3.70)
VPF-A0633F	4500	4500	1.27 (11.0)	4.09 (36.0)	0.47 (0.63)		
VPF-A0752C	3300	3300	1.61 (14.0)	4.39 (39.0)	0.49 (0.66)	0.0000250 (0.00022)	2.03 (4.47)
VPF-A0752E	4800	4800	1.61 (14.0)	4.39 (39.0)	0.63 (0.84)		
VPF-A0753C	3300	3300	2.16 (19.0)	7.02 (62.0)	0.59 (0.79)	0.0000365 (0.00032)	2.59 (5.70)
VPF-A0753E	4600	4600	2.28 (20.0)	7.35 (65.0)	0.76 (1.02)		
VPF-A1001C	2800	2800	1.93 (17.0)	3.78 (33.0)	0.56 (0.75)	0.000044 (0.00039)	2.63 (5.80)
VPF-A1001M	6500	6500	1.95 (17.0)	3.78 (33.0)	1.29 (1.73)		
VPF-A1002C	3000	3000	3.39 (30.0)	7.82 (69.0)	1.03 (1.38)	0.000078 (0.00069)	4.52 (9.95)
VPF-A1002F	5000	5000	3.26 (29.0)	7.82 (69.0)	1.60 (2.14)		
VPF-A1003C	2250	2250	4.18 (37.0)	11.15 (99.0)	0.83 (1.11)	0.00012 (0.0010)	4.45 (9.80)
VPF-A1003E	3750	3750	4.18 (37.0)	11.15 (99.0)	1.25 (1.67)		
VPF-A1003F	5500	5500	4.18 (37.0)	11.15 (99.0)	1.81 (2.42)		
VPF-A1153C	2300	2300	6.50 (58.0)	20.33 (180)	1.16 (1.56)	0.00038 (0.0033)	6.01 (13.23)
VPF-A1303B	1950	1950	8.80 (78.0)	20.72 (183)	1.53 (2.05)	0.00040 (0.0035)	7.54 (16.60)
VPF-A1303F	4000	4000	7.75 (69.0)	20.72 (183)	2.25 (3.02)		
VPF-A1304A	1600	1600	10.29 (91.0)	28.45 (252)	1.47 (1.98)	0.00052 (0.0046)	9.10 (20.05)
VPF-A1304D	3000	3000	10.20 (90.0)	27.10 (240)	1.98 (2.65)		

(1) Refer to Kinetix VPF Servo Motor Brake Specifications on page 56 for brake rotor inertia and brake motor weight.

Kinetix VPF Servo Motor (400V-class) Performance Specifications

Motor Cat. No.	Rated Speed rpm	Maximum Speed rpm	Continuous Stall Torque N•m (lb•in)	Peak Stall Torque N•m (lb•in)	Motor Rated Output kW (Hp)	Rotor Inertia (1) kg-m^2 (lb•in•s^2)	Motor Weight, (1) approx kg (lb)
VPF-B0632F	4600	4600	0.93 (8.0)	2.69 (24.0)	0.34 (0.46)	0.000017 (0.00015)	1.36 (3.00)
VPF-B0632T	7200	8000	0.93 (8.0)	2.69 (24.0)	0.41 (0.55)		
VPF-B0633M	6700	6700	1.27 (11.0)	4.09 (36.0)	0.49 (0.66)	0.0000247 (0.00022)	1.68 (3.70)
VPF-B0633T	6000	8000	1.27 (11.0)	4.09 (36.0)	0.48 (0.64)		
VPF-B0752E	4900	4900	1.61 (14.0)	4.39 (39.0)	0.64 (0.86)	0.000025 (0.00022)	2.03 (4.47)
VPF-B0752F	7000	7000	1.61 (14.0)	4.39 (39.0)	0.76 (1.02)		
VPF-B0752M	8000	8000	1.61 (14.0)	4.39 (39.0)	0.77 (1.04)		
VPF-B0753E	4500	4500	2.28 (20.0)	7.35 (65.0)	0.77 (1.04)	0.0000365 (0.00032)	2.59 (5.70)
VPF-B0753F	4500	6600	2.16 (19.0)	7.02 (62.0)	0.61 (0.82)		
VPF-B0753M	6000	8000	2.28 (20.0)	7.35 (65.0)	0.78 (1.05)		
VPF-B1001M	6000	6000	1.93 (17.0)	3.78 (34.0)	1.14 (1.53)	0.000044 (0.00039)	2.63 (5.80)
VPF-B1002E	3300	3300	3.39 (30.0)	7.82 (69.0)	1.12 (1.50)	0.000078 (0.00069)	3.56 (7.85)
VPF-B1002M	6000	6000	3.39 (30.0)	7.82 (69.0)	1.86 (2.49)		
VPF-B1003C	2500	2500	4.18 (37.0)	11.15 (99.0)	0.91 (1.23)	0.00012 (0.0010)	4.45 (9.80)
VPF-B1003F	4750	4750	4.18 (37.0)	11.15 (99.0)	1.57 (2.10)		
VPF-B1003T	7000	7000	4.18 (37.0)	11.15 (99.0)	1.68 (2.25)		
VPF-B1153E	3200	3200	6.50 (58.0)	20.33 (180)	1.40 (1.88)	0.00038 (0.0033)	6.01 (13.23)
VPF-B1153F	4000	5000	6.50 (58.0)	20.33 (180)	1.49 (2.00)		
VPF-B1303C	2250	2250	8.80 (78.0)	20.72 (183)	1.74 (2.33)	0.00040 (0.0035)	7.54 (16.60)
VPF-B1303F	4000	4000	8.80 (78.0)	20.72 (183)	2.54 (3.40)		
VPF-B1304C	2150	2150	10.29 (91.0)	28.45 (252)	1.49 (2.00)	0.00052 (0.0046)	9.10 (20.05)
VPF-B1304E	3500	3500	10.29 (91.0)	28.45 (252)	2.40 (3.21)		
VPF-B1652C	2700	2700	19.40 (172)	48.60 (430)	4.18 (5.60)	0.00147 (0.013)	17.80 (39.24)

(1) Refer to Kinetix VPF Servo Motor Brake Specifications on page 56 for brake rotor inertia and brake motor weight.

Kinetix VPF Servo Motor Brake Specifications

Motor Cat. No.	Backlash, max (brake engaged) arc minutes	Holding Torque N•m (lb•in)	Coil Current at 24V DC A	Brake Response Time		Brake Rotor Inertia kg-m^2 (lb•in•s^2)	Brake Motor Weight, approx kg (lb)
				Release ms	Engage (1) ms		
VPF-A/B0632	30	1.50 (13)	0.297...0.363	38	25	0.0000194 (0.00017)	1.70 (3.74)
VPF-A/B0633						0.0000271 (0.00024)	2.02 (4.45)
VPF-A/B0752		3.0 (27)	0.567...0.693	66	42	0.0000297 (0.00026)	2.62 (5.77)
VPF-A/B0753						0.0000412 (0.00036)	3.18 (7.0)
VPF-A/B1001		4.18 (37)	0.45...0.55	90	65	0.000059 (0.00052)	3.26 (7.19)
VPF-A/B1002						0.000093 (0.00082)	4.20 (9.24)
VPF-A/B1003						0.000135 (0.0012)	5.08 (11.19)
VPF-A/B1153		6.55 (58)	0.621...0.759	90	95	0.000409 (0.0036)	6.88 (15.15)
VPF-A/B1303		14.10 (125)	0.738...0.902	125	120	0.000433 (0.0038)	8.64 (19.03)
VPF-A/B1304						0.000553 (0.0049)	10.21 (22.48)
VPF-B1652		32.0 (283)	1.053...1.287	140	120	0.00153 (0.013)	19.65 (43.32)

(1) By using diode and zener diode as arc suppression device in external control circuit.

Kinetix VPF Servo Motor Load Force Ratings

Kinetix VPF servo motors are capable of operating with the maximum radial or maximum axial shaft loads listed in the following tables. Radial loads listed are applied in the middle of the shaft extension. The tables starting below represent an L_{10} bearing fatigue life of 20,000 hours. This 20,000-hour life does not account for possible application-specific life reduction that can occur due to bearing grease contamination from external sources. Maximum operating speed is limited by motor winding.

Load Forces on Shaft

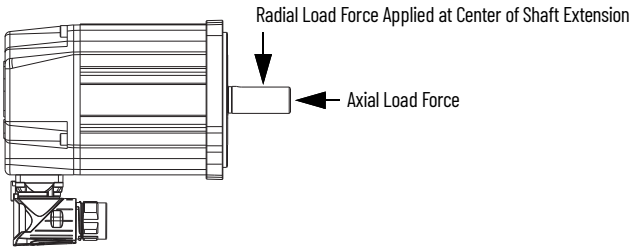

Kinetix VPF Servo Motors (063...075 frame size)

Radial Load Force Ratings (maximum) for Non-brake Motors

Motor Cat. No. (1)	Maximum Speed rpm	Load (kgf) at Speed (rpm)													
		500 kgf	1000 kgf	1500 kgf	2000 kgf	2500 kgf	3000 kgf	3500 kgf	4000 kgf	4500 kgf	5000 kgf	6000 kgf	6500 kgf	7000 kgf	7500 kgf	8000 kgf
VPF-A0632F	4800	–	28.9	25.2	–	–	21.0 *	–	–	–	17.1 *	–	–	–	–	–
VPF-A0633C	3000	38.1	30.3	27.4 *	–	–	21.0	–	–	–	–	–	–	–	–	–
VPF-A0633F	4500	38.1	–	26.4	–	–	21.0	–	–	18.3	–	–	–	–	–	–
VPF-A0752C	3300	36.1	28.6	25.9 *	–	–	–	19.2 *	–	–	–	–	–	–	–	–
VPF-A0752E	4800	36.1	28.6	–	–	21.8 *	–	–	–	–	17.0 *	–	–	–	–	–
VPF-A0753C	3300	37.8	30.0	27.5 *	–	–	–	20.2 *	–	–	–	–	–	–	–	–
VPF-A0753E	4600	37.8	30.0	–	–	23.3 *	–	–	–	–	18.0 *	–	–	–	–	–
VPF-B0632F	4600	–	28.9	25.2	–	–	21.0 *	–	–	–	17.1 *	–	–	–	–	–
VPF-B0632T	8000	–	–	–	22.9	–	–	–	18.2	–	–	–	15.6 *	–	–	14.4
VPF-B0633M	6700	–	30.3	–	24.0	–	–	–	19.2 *	–	–	–	–	15.9 *	–	–
VPF-B0633T	8000	–	–	26.4	–	–	21.0	–	–	–	–	16.8 *	–	–	–	15.1
VPF-B0752E	4900	36.1	28.6	–	–	22.0 *	–	–	–	–	17.0 *	–	–	–	–	–
VPF-B0752F	7000	–	28.6	–	22.7	–	–	19.3 *	–	–	–	–	–	15.0	–	–
VPF-B0752M	8000	–	–	25.0	–	–	20.8	–	–	–	16.8 *	–	–	–	–	14.3
VPF-B0753E	4500	37.8	30.0	–	23.8	–	–	–	–	18.2	–	–	–	–	–	–
VPF-B0753F	6600	–	30.0	–	23.8	–		20.6 *	–	–	–	–	16.1	–	–	–
VPF-B0753M	8000	–	–	26.2	–	–	19.8	–	–	–	18.0 *	–	–	–	–	15.0

(1) 1.0 kgf = 2.2 lbf or 9.8 N. An asterisk (*) indicates a load rating measured at an rpm value that is less than the value listed for that column.

Axial Load Force Ratings (maximum radial load) for Non-brake Motors

Motor Cat. No. (1)	Maximum Speed rpm	Load (kgf) at Speed (rpm)														
		500 kgf	1000 kgf	1500 kgf	2000 kgf	2500 kgf	3000 kgf	3500 kgf	4000 kgf	4500 kgf	5000 kgf	6000 kgf	6500 kgf	7000 kgf	7500 kgf	8000 kgf
VPF-A0632F	4800	–	23.5	19.7	–	–	15.5 *	–	–	–	11.9 *	–	–	–	–	–
VPF-A0633C	3000	32.7	24.2	21.3 *	–	–	15.0	–	–	–	–	–	–	–	–	–
VPF-A0633F	4500	32.7	–	20.3	–	–	15.0	–	–	12.6	–	–	–	–	–	–
VPF-A0752C	3300	31.5	23.3	20.5 *	–	–	–	13.9 *	–	–	–	–	–	–	–	–
VPF-A0752E	4800	31.5	23.3	–	–	16.4 *	–	–	–	–	11.8 *	–	–	–	–	–
VPF-A0753C	3300	32.5	24.1	21.5 *	–	–	–	14.3 *	–	–	–	–	–	–	–	–
VPF-A0753E	4600	32.5	24.1	–	–	17.3 *	–	–	–	–	12.4 *	–	–	–	–	–
VPF-B0632F	4600	–	23.5	19.7	–	–	15.5 *	–	–	–	11.9 *	–	–	–	–	–
VPF-B0632T	8000	–	–	–	17.4	–	–	–	12.9	–	–	–	10.6	–	–	9.5
VPF-B0633M	6700	–	24.2	–	17.9	–	–	–	13.4 *	–	–	–	–	10.5 *	–	–
VPF-B0633T	8000	–	–	20.3	–	–	15.0	–	–	–	–	11.3 *	–	–	–	9.8
VPF-B0752E	4900	31.5	23.3	–	–	16.6 *	–	–	–	–	11.8 *	–	–	–	–	–
VPF-B0752F	7000	–	23.3	–	17.3	–	–	14.0 *	–	–	–	–	–	10.0	–	–
VPF-B0752M	8000	–	–	19.6	–	–	14.5	–	–	–	11.7 *	–	–	–	–	9.5
VPF-B0753E	4500	32.5	24.1	–	17.8	–	–	–	–	12.5	–	–	–	–	–	–
VPF-B0753F	6600	–	24.1	–	17.8	–	–	14.7 *	–	–	–	–	10.7	–	–	–
VPF-B0753M	8000	–	–	20.2	–	–	14.9	–	–	–	12.4 *	–	–	–	–	9.8

(1) 1.0 kgf = 2.2 lbf or 9.8 N. An asterisk (*) indicates a load rating measured at an rpm value that is less than the value listed for that column.

Axial Load Force Ratings (zero radial load) for Non-brake Motors

Motor Cat. No. (1)	Maximum Speed rpm	Load (kgf) at Speed (rpm)														
		500 kgf	1000 kgf	1500 kgf	2000 kgf	2500 kgf	3000 kgf	3500 kgf	4000 kgf	4500 kgf	5000 kgf	6000 kgf	6500 kgf	7000 kgf	7500 kgf	8000 kgf
VPF-A0632F	4800	–	27.5	23.0	–	–	18.1 *	–	–	–	13.9 *	–	–	–	–	–
VPF-A0633C	3000	37.1	27.5	24.1 *	–	–	17.1	–	–	–	–	–	–	–	–	–
VPF-A0633F	4500	37.1	–	23.0	–	–	17.1	–	–	14.3	–	–	–	–	–	–
VPF-A0752C	3300	37.1	27.5	24.1 *	–	–	–	16.4 *	–	–	–	–	–	–	–	–
VPF-A0752E	4800	37.1	27.5	–	–	19.3 *	–	–	–	–	13.9 *	–	–	–	–	–
VPF-A0753C	3300	37.1	27.5	24.5 *	–	–	–	16.4 *	–	–	–	–	–	–	–	–
VPF-A0753E	4600	37.1	27.5	–	–	19.7 *	–	–	–	–	14.2 *	–	–	–	–	–
VPF-B0632F	4600	–	27.5	23.0	–	–	18.1 *	–	–	–	13.9 *	–	–	–	–	–
VPF-B0632T	8000	–	–	–	20.3	–	–	–	15.1	–	–	–	12.4 *	–	–	11.1
VPF-B0633M	6700	–	27.5	–	20.3	–	–	–	15.2 *	–	–	–	–	11.9 *	–	–
VPF-B0633T	8000	–	–	23.0	–	–	17.1	–	–	–	–	12.8 *	–	–	–	11.1
VPF-B0752E	4900	37.1	27.5	–	–	19.5 *	–	–	–	–	13.9 *	–	–	–	–	–
VPF-B0752F	7000	–	27.5	–	20.3	–	–	16.5 *	–	–	–	–	–	11.8	–	–
VPF-B0752M	8000	–	–	23.0	–	–	17.1	–	–	–	13.8 *	–	–	–	–	11.1
VPF-B0753E	4500	37.1	27.5	–	20.3	–	–	–	–	14.3	–	–	–	–	–	–
VPF-B0753F	6600	–	27.5	–	20.3	–	–	16.8 *	–	–	–	–	12.2	–	–	–
VPF-B0753M	8000	–	–	23.0	–	–	17.1	–	–	–	14.2 *	–	–	–	–	11.1

(1) 1.0 kgf = 2.2 lbf or 9.8 N. An asterisk (*) indicates a load rating measured at an rpm value that is less than the value listed for that column.

Radial Load Force Ratings (maximum) for Brake Motors

Motor Cat. No. (1)	Maximum Speed rpm	Load (kgf) at Speed (rpm)														
		500 kgf	1000 kgf	1500 kgf	2000 kgf	2500 kgf	3000 kgf	3500 kgf	4000 kgf	4500 kgf	5000 kgf	6000 kgf	6500 kgf	7000 kgf	7500 kgf	8000 kgf
VPF-A0632F	4800	–	30.5	26.6	–	–	22.2 *	–	–	–	18.1 *	–	–	–	–	–
VPF-A0633C	3000	39.5	31.4	28.4 *	–	–	21.8	–	–	–	–	–	–	–	–	–
VPF-A0633F	4500	39.5	–	27.4	–	–	21.8	–	–	19.0	–	–	–	–	–	–
VPF-A0752C	3300	38.1	30.3	27.4	–	–	–	20.3 *	–	–	–	–	–	–	–	–
VPF-A0752E	4800	38.1	30.3	–	–	23.1 *	–	–	–	–	17.9 *	–	–	–	–	–
VPF-A0753C	3300	39.2	31.2	28.5 *	–	–	–	20.9 *	–	–	–	–	–	–	–	–
VPF-A0753E	4600	39.2	31.2	–	–	24.1 *	–	–	–	–	18.7 *	–	–	–	–	–
VPF-B0632F	4600	–	30.5	26.6	–	–	22.2 *	–	–	–	18.1 *	–	–	–	–	–
VPF-B0632T	8000	–	–	–	24.2	–	–	–	19.2	–	–	–	16.5 *	–	–	15.3
VPF-B0633M	6700	–	31.4	–	24.9	–	–	–	19.9 *	–	–	–	–	16.5 *	–	–
VPF-B0633T	8000	–	–	27.4	–	–	21.8	–	–	–	–	17.5 *	–	–	–	15.7
VPF-B0752E	4900	38.1	30.3	–	–	23.3 *	–	–	–	–	17.9 *	–	–	–	–	–
VPF-B0752F	7000	–	30.3	–	24.0	–	–	20.4 *	–	–	–	–	–	15.8	–	–
VPF-B0752M	8000	–	–	26.4	–	–	21.0	–	–	–	17.8 *	–	–	–	–	15.1
VPF-B0753E	4500	39.2	31.2	–	24.7	–	–	–	–	18.9	–	–	–	–	–	–
VPF-B0753F	6600	–	31.2	–	24.7	–	–	21.4 *	–	–	–	–	16.7	–	–	–
VPF-B0753M	8000	–	–	27.2	–	–	21.6	–	–	–	18.7 *	–	–	–	–	15.6

(1) 1.0 kgf = 2.2 lbf or 9.8 N. An asterisk (*) indicates a load rating measured at an rpm value that is less than the value listed for that column.

Axial Load Force Ratings (maximum radial load) for Brake Motors

Motor Cat. No. (1)	Maximum Speed rpm	Load (kgf) at Speed (rpm)														
		500 kgf	1000 kgf	1500 kgf	2000 kgf	2500 kgf	3000 kgf	3500 kgf	4000 kgf	4500 kgf	5000 kgf	6000 kgf	6500 kgf	7000 kgf	7500 kgf	8000 kgf
VPF-A0632F	4800	–	24.3	20.4	–	–	16.1 *	–	–	–	12.3 *	–	–	–	–	–
VPF-A0633C	3000	33.5	24.8	21.8 *	–	–	15.4	–	–	–	–	–	–	–	–	–
VPF-A0633F	4500	33.5	–	20.8	–	–	15.4	–	–	12.9	–	–	–	–	–	–
VPF-A0752C	3300	32.7	24.2	21.3 *	–		–	14.4 *	–	–	–	–	–	–	–	–
VPF-A0752E	4800	32.7	24.2	–	–	17.0 *	–	–	–	–	12.3 *	–	–	–	–	–
VPF-A0753C	3300	33.4	24.7	22.0 *	–		–	14.7 *	–	–	–	–	–	–	–	–
VPF-A0753E	4600	33.4	24.7	–	–	17.7 *	–	–	–	–	12.7 *	–	–	–	–	–
VPF-B0632F	4600	–	24.3	20.4	–	–	16.1 *	–	–	–	12.3 *	–	–	–	–	–
VPF-B0632T	8000	–	–	–	18.0	–	–	–	13.3	–	–	–	11.0 *	–	–	9.9
VPF-B0633M	6700	–	24.8	–	18.4	–	–	–	13.7 *	–	–	–	–	10.7 *	–	–
VPF-B0633T	8000	–	–	20.8	–	–	15.4	–	–	–	–	11.6 *	–	–	–	10.1
VPF-B0752E	4900	32.7	24.2	–	–	17.2 *	–	–	–	–	12.3 *	–	–	–	–	–
VPF-B0752F	7000	–	24.2	–	17.9	–	–	14.5 *	–	–	–	–	–	10.4	–	–
VPF-B0752M	8000	–	–	20.3	–	–	15.0	–	–	–	12.1 *	–	–	–	–	9.8
VPF-B0753E	4500	33.4	24.7	–	18.3	–	–	–	–	12.9	–	–	–	–	–	–
VPF-B0753F	6600	–	24.7	–	18.3	–	–	15.1 *	–	–	–	–	11.0	–	–	–
VPF-B0753M	8000	–	–	20.7	–	–	15.3	–	–	–	12.7 *	–	–	–	–	10.0

(1) 1.0 kgf = 2.2 lbf or 9.8 N. An asterisk (*) indicates a load rating measured at an rpm value that is less than the value listed for that column.

Axial Load Force Ratings (zero radial load) for Brake Motors

Motor Cat. No. (1)	Maximum Speed rpm	Load (kgf) at Speed (rpm)														
		500 kgf	1000 kgf	1500 kgf	2000 kgf	2500 kgf	3000 kgf	3500 kgf	4000 kgf	4500 kgf	5000 kgf	6000 kgf	6500 kgf	7000 kgf	7500 kgf	8000 kgf
VPF-A0632F	4800	–	27.5	23.0	–	–	18.1 *	–	–	–	13.9 *	–	–	–	–	–
VPF-A0633C	3000	37.1	27.5	24.1 *	–	–	17.1	–	–	–	–	–	–	–	–	–
VPF-A0633F	4500	37.1	–	23.0	–	–	17.1	–	–	14.3	–	–	–	–	–	–
VPF-A0752C	3300	37.1	27.5	24.1 *	–	–	–	16.4 *	–	–	–	–	–	–	–	–
VPF-A0752E	4800	37.1	27.5	–	–	19.3 *	–	–	–	–	13.9 *	–	–	–	–	–
VPF-A0753C	3300	37.1	27.5	24.5 *	–	–	–	16.4 *	–	–	–	–	–	–	–	–
VPF-A0753E	4600	37.1	27.5	–	–	19.7 *	–	–	–	–	14.2 *	–	–	–	–	–
VPF-B0632F	4600	–	27.5	23.0	–	–	18.1 *	–	–	–	13.9 *	–	–	–	–	–
VPF-B0632T	8000	–	–	–	20.3	–	–	–	15.1	–	–	–	12.4 *	–	–	11.1
VPF-B0633M	6700	–	27.5	–	20.3	–	–	–	15.2 *	–	–	–	–	11.9 *	–	–
VPF-B0633T	8000	–	–	23.0	–	–	17.1	–	–	–	–	12.8 *	–	–	–	11.1
VPF-B0752E	4900	37.1	27.5	–	–	19.5 *	–	–	–	–	13.9 *	–	–	–	–	–
VPF-B0752F	7000	–	27.5	–	20.3	–	–	16.5 *	–	–	–	–	–	11.8	–	–
VPF-B0752M	8000	–	–	23.0	–	–	17.1	–	–	–	13.8 *	–	–	–	–	11.1
VPF-B0753E	4500	37.1	27.5	–	20.3	–	–	–	–	14.3	–	–	–	–	–	–
VPF-B0753F	6600	–	27.5	–	20.3	–	–	16.8 *	–	–	–	–	12.2	–	–	–
VPF-B0753M	8000	–	–	23.0	–	–	17.1	–	–	–	14.2 *	–	–	–	–	11.1

(1) 1.0 kgf = 2.2 lbf or 9.8 N. An asterisk (*) indicates a load rating measured at an rpm value that is less than the value listed for that column.

Kinetix VPF Servo Motors (100...165 frame size)

Radial Load Force Ratings (maximum) for Non-brake Motors

Motor Cat. No. (1)	Maximum Speed rpm	Load (kgf) at Speed (rpm)														
		500 kgf	750 kgf	1000 kgf	1500 kgf	2000 kgf	2500 kgf	3000 kgf	3500 kgf	4000 kgf	4500 kgf	5000 kgf	5500 kgf	6000 kgf	6500 kgf	7000 kgf
VPF-A1001C	2800	79.1	–	62.8	–	49.8	–	44.6 *	–	–	–	–	–	–	–	–
VPF-A1001M	6500	–	–	–	54.9	–	46.3	–	–	–	38.0	–	–	–	33.6	–
VPF-A1002C	3000	87.9	–	69.7	–	55.4	–	48.4	–	–	–	–	–	–	–	–
VPF-A1002F	5000	–	–	69.7	60.9	–	–	48.4	–	–	–	40.8	–	–	–	–
VPF-A1003C	2250	93.6	–	74.3	64.9	–	56.7 *	–	–	–	–	–	–	–	–	–
VPF-A1003E	3750	93.6	–	74.3	–	59.0	–	–	–	47.8 *	–	–	–	–	–	–
VPF-A1003F	5500	–	–	–	64.9	–	54.8	–	–	46.8	–	–	42.1	–	–	–
VPF-A1153C	2300	106.4	–	84.5	73.8	–	64.0 *	–	–	–	–	–	–	–	–	–
VPF-A1303B	1950	132.9	–	105.5	92.2	84.4 *	–	–	–	–	–	–	–	–	–	–
VPF-A1303F	4000	–	–	105.5	–	83.7	–	73.1	–	66.5		–	–	–	–	–
VPF-A1304A	1600	140.2	122.5	112.2 *	–	95.2 *	–	–	–	–	–	–	–	–	–	–
VPF-A1304D	3000	140.2	–	111.3	–	88.3	–	77.2	–	–	–	–	–	–	–	–
VPF-B1001M	6000	–	–	–	–	49.8	–	43.5	–	39.6	–	–	–	34.6	–	–
VPF-B1002E	3300	87.9	–	69.7	–	55.4	–	–	46.8 *	–	–	–	–	–	–	–
VPF-B1002M	6000	–	–	–	60.9	–	–	48.4	–	–	42.2	–	–	38.4	–	–
VPF-B1003C	2500	93.6	–	74.3	64.9	–	54.8	–	–	–	–	–	–	–	–	–
VPF-B1003F	4750	–	–	74.3	64.9	–	–	51.5	–	–	–	44.2 *	–	–	–	–
VPF-B1003T	7000	–	–	–	64.9	–	54.8	–	–	–	45.0	–	–	–	–	38.9
VPF-B1153E	3200	106.4	–	84.5	–	67.0	–	–	57.3 *	–	–	–	–	–	–	–
VPF-B1153F	5000	–	–	84.5	–	67.0	–	58.6	–	–	–	49.4	–	–	–	–
VPF-B1303C	2250	132.9	–	105.5	92.2	–	80.5 *	–	–	–	–	–	–	–	–	–
VPF-B1303F	4000	–	–	105.5	–	83.7	–	74.0 *	–	66.5	–	–	–	–	–	–
VPF-B1304C	2150	140.2	–	111.3	99.5 *	–	86.2 *	–	–	–	–	–	–	–	–	–
VPF-B1304E	3500	–	–	111.3	97.2	–	84.3 *	–	73.3	–	–	–	–	–	–	–
VPF-B1652C	2700	180.7	–	143.4	125.3	–	–	103.0 *	–	–	–	–	–	–	–	–

(1) 1.0 kgf = 2.2 lbf or 9.8 N. An asterisk (*) indicates a load rating measured at an rpm value that is less than the value listed for that column.

Axial Load Force Ratings (maximum radial load) for Non-brake Motors

Motor Cat. No. (1)	Maximum Speed rpm	Load (kgf) at Speed (rpm)														
		500 kgf	750 kgf	1000 kgf	1500 kgf	2000 kgf	2500 kgf	3000 kgf	3500 kgf	4000 kgf	4500 kgf	5000 kgf	5500 kgf	6000 kgf	6500 kgf	7000 kgf
VPF-A1001C	2800	25.0	–	19.0	–	10.0	–	10.0 *	–	–	–	–	–	–	–	–
VPF-A1001M	6500	–	–	–	15.0	–	12.0	–	–	–	9.0	–	–	–	8.0	–
VPF-A1002C	3000	30.0	–	22.0	–	16.0	–	13.0	–	–	–	–	–	–	–	–
VPF-A1002F	5000	–	–	22.0	18.0	–	–	13.0	–	–	–	11.0	–	–	–	–
VPF-A1003C	2250	33.0	–	24.0	20.0	–	17.0 *	–	–	–	–	–	–	–	–	–
VPF-A1003E	3750	33.0	–	24.0	–	18.0	–	–	–	13.0 *	–	–	–	–	–	–
VPF-A1003F	5500	–	–	–	20.0	–	16.0	–	–	13.0	–	–	11.0	–	–	–
VPF-A1153C	2300	48.0	–	35.0	29.0	–	24.0 *	–	–	–	–	–	–	–	–	–
VPF-A1303B	1950	39.0	–	29.0	24.0	22.0 *	–	–	–	–	–	–	–	–	–	–
VPF-A1303F	4000	–	–	29.0	–	21.0	–	18.0	–	16.0	–	–	–	–	–	–
VPF-A1304A	1600	43.0	36.0	32.0 *	–	26.0 *	–	–	–	–	–	–	–	–	–	–
VPF-A1304D	3000	43.0	–	32.0	–	23.0	–	20.0	–	–	–	–	–	–	–	–
VPF-B1001M	6000	–	–	–	–	14.0	–	11.0	–	10.0	–	–	–	8.0	–	–
VPF-B1002E	3300	30.0	–	22.0	–	16.0	–	–	13.0 *	–	–	–	–	–	–	–
VPF-B1002M	6000	–	–	–	18.0	–	–	13.0	–	–	11.0	–	–	10.0	–	–
VPF-B1003C	2500	33.0	–	24.0	20.0	–	16.0	–	–	–	–	–	–	–	–	–
VPF-B1003F	4750	–	–	24.0	20.0	–	–	15.0	–	–	–	12.0 *	–	–	–	–
VPF-B1003T	7000	–	–	–	20.0	–	16.0	–	–	–	12.0	–	–	–	–	10.0
VPF-B1153E	3200	48.0	–	35.0	–	26.0	–	–	21.0 *	–	–	–	–	–	–	–
VPF-B1153F	5000	–	–	35.0	–	26.0	–	22.0	–	–	–	17.0	–	–	–	–
VPF-B1303C	2250	39.0	–	29.0	–	24.0	20.0 *	–	–	–	–	–	–	–	–	–
VPF-B1303F	4000	–	–	29.0	–	21.0	–	18.0 *	–	16.0	–	–	–	–	–	–
VPF-B1304C	2150	43.0	–	32.0	27.0 *	–	23.0 *	–	–	–	–	–	–	–	–	–
VPF-B1304E	3500	–	–	32.0	27.0	–	22.0 *	–	18.0	–	–	–	–	–	–	–
VPF-B1652C	2700	58.0	–	43.0	36.0	–	–	27.0 *	–	–	–	–	–	–	–	–

(1) 1.0 kgf = 2.2 lbf or 9.8 N. An asterisk (*) indicates a load rating measured at an rpm value that is less than the value listed for that column.

Axial Load Force Ratings (zero radial load) for Non-brake Motors

Motor Cat. No. (1)	Maximum Speed rpm	Load (kgf) at Speed (rpm)														
		500 kgf	750 kgf	1000 kgf	1500 kgf	2000 kgf	2500 kgf	3000 kgf	3500 kgf	4000 kgf	4500 kgf	5000 kgf	5500 kgf	6000 kgf	6500 kgf	7000 kgf
VPF-A1001C	2800	49.4	–	36.5	–	27.0	–	23.4 *	–	–	–	–	–	–	–	–
VPF-A1001M	6500	–	–	–	30.6	–	24.5	–	–	–	19.0	–	–	–	16.2	–
VPF-A1002C	3000	49.4	–	36.5	–	27.0	–	22.7	–	–	–	–	–	–	–	–
VPF-A1002F	5000	–	–	36.5	30.6	–	–	22.7	–	–	–	18.2	–	–	–	–
VPF-A1003C	2250	49.4	–	36.5	30.6	–	25.7 *	–	–	–	–	–	–	–	–	–
VPF-A1003E	3750	49.4	–	36.5	–	27.0	–	–	–	20.6 *	–	–	–	–	–	–
VPF-A1003F	5500	–	–	–	30.6	–	24.5	–	–	20.0	–	–	17.4	–	–	–
VPF-A1153C	2300	68.3	–	50.5	42.4		35.2 *	–	–	–	–	–	–	–	–	–
VPF-A1303B	1950	68.3	–	50.5	42.4	37.8 *	–	–	–	–	–	–	–	–	–	–
VPF-A1303F	4000	–	–	50.5	–	37.4	–	31.4	–	27.7	–	–	–	–	–	–
VPF-A1304A	1600	68.3	57.2	51.1 *	–	41.2 *	–	–	–	–	–	–	–	–	–	–
VPF-A1304D	3000	68.3	–	50.5	–	37.4	–	31.4	–	–	–	–	–	–	–	–
VPF-B1001M	6000	–	–	–	–	27.0	–	22.7	–	20.0	–	–	–	16.8	–	–
VPF-B1002E	3300	49.4	–	36.5	–	27.0	–	–	21.8 *	–	–	–	–		–	–
VPF-B1002M	6000	–	–	–	30.6	–	–	22.7	–	–	19.0	–	–	16.8	–	–
VPF-B1003C	2500	49.4	–	36.5	30.6	–	24.5	–	–	–	–	–	–	–	–	–
VPF-B1003F	4750	–	–	36.5	30.6	–	–	22.7	–	–	–	18.6 *	–	–	–	–
VPF-B1003T	7000	–	–	–	30.6	–	24.5	–	–	–	19.0	–	–	–	–	15.7
VPF-B1153E	3200	68.3	–	50.5	–	37.4	–	–	30.5 *	–	–	–	–	–	–	–
VPF-B1153F	5000	–	–	50.5	–	37.4	–	31.4	–	–	–	25.1	–	–	–	–
VPF-B1303C	2250	68.3	–	50.5	42.3	–	35.5 *	–	–	–	–	–	–	–	–	–
VPF-B1303F	4000	–	–	50.5	–	37.4	–	31.8 *	–	27.7	–	–	–	–	–	–
VPF-B1304C	2150	68.3	–	50.5	43.6 *	–	36.2 *	–	–	–	–	–	–	–	–	–
VPF-B1304E	3500	–	–	50.5	42.4	–	35.2 *	–	29.3	–	–	–	–	–	–	–
VPF-B1652C	2700	90.1	–	66.7	55.9	–	–	43.3 *	–	–	–	–	–	–	–	–

(1) 1.0 kgf = 2.2 lbf or 9.8 N. An asterisk (*) indicates a load rating measured at an rpm value that is less than the value listed for that column.

Radial Load Force Ratings (maximum) for Brake Motors

Motor Cat. No. (1)	Maximum Speed rpm	Load (kgf) at Speed (rpm)														
		500 kgf	750 kgf	1000 kgf	1500 kgf	2000 kgf	2500 kgf	3000 kgf	3500 kgf	4000 kgf	4500 kgf	5000 kgf	5500 kgf	6000 kgf	6500 kgf	7000 kgf
VPF-A1001C	2800	90.2	–	71.6	–	56.8	–	50.8 *	–	–	–	–	–	–	–	–
VPF-A1001M	6500	–	–	–	62.5	–	52.7	–	–	–	43.4	–	–	–	38.4	–
VPF-A1002C	3000	95.3	–	75.6	–	60.0	–	52.4	–	–	–	–	–	–	–	–
VPF-A1002F	5000	–	–	75.6	66.1	–	–	52.4	–	–	–	44.2	–	–	–	–
VPF-A1003C	2250	99.0	–	78.5	68.6	–	59.9 *	–	–	–	–	–	–	–	–	–
VPF-A1003E	3750	99.0	–	78.5	–	62.3	–	–	–	50.6 *	–	–	–	–	–	–
VPF-A1003F	5500	–	–	–	68.6	–	57.9	–	–	49.5	–	–	44.5	–	–	–
VPF-A1153C	2300	115.4	–	91.6	80.0	–	69.4 *	–	–	–	–	–	–	–	–	–
VPF-A1303B	1950	145.3	–	115.3	100.7	92.3 *	–	–	–	–	–	–	–	–	–	–
VPF-A1303F	4000	–	–	115.3	–	91.5	–	80.0	–	72.7	–	–	–	–	–	–
VPF-A1304A	1600	149.7	130.8	119.8 *	–	101.6 *	–	–	–	–	–	–	–	–	–	–
VPF-A1304D	3000	149.5	–	118.6	–	94.2	–	82.3	–	–	–	–	–	–	–	–
VPF-B1001M	6000	–	–	–	–	56.8	–	49.6	–	45.1	–	–	–	39.4	–	–
VPF-B1002E	3300	95.3	–	75.6	–	60.0	–	–	50.8 *	–	–	–	–	–	–	–
VPF-B1002M	6000	–	–	–	66.1	–	–	52.4	–	–	45.8	–	–	41.6	–	–
VPF-B1003C	2500	99.0	–	78.5	68.6	–	57.9	–	–	–	–	–	–	–	–	–
VPF-B1003F	4750	–	–	78.5	68.6	–		54.5	–	–	–	46.7 *	–	–	–	–
VPF-B1003T	7000	–	–	–	68.6	–	57.9	–	–	–	47.6	–	–	–	–	41.1
VPF-B1153E	3200	115.4	–	91.6	–	72.7	–	–	62.2 *	–	–	–	–	–	–	–
VPF-B1153F	5000	–	–	91.6	–	72.7	–	63.5	–	–	–	53.6	–	–	–	–
VPF-B1303C	2250	145.3	–	115.3	100.7	–	88.0 *	–	–	–	–	–	–	–	–	–
VPF-B1303F	4000	–	–	115.3	–	91.5	–	80.9 *	–	72.7	–	–	–	–	–	–
VPF-B1304C	2150	149.7	–	118.8	106.2 *	–	92.0 *	–	–	–	–	–	–	–	–	–
VPF-B1304E	3500	–	–	118.8	103.8	–	90.0 *	–	78.2	–	–	–	–	–	–	–
VPF-B1652C	2700	192.5	–	152.8	133.5	–	–	109.7 *	–	–	–	–	–	–	–	–

(1) 1.0 kgf = 2.2 lbf or 9.8 N. An asterisk (*) indicates a load rating measured at an rpm value that is less than the value listed for that column.

Axial Load Force Ratings (maximum radial load) for Brake Motors

Motor Cat. No. (1)	Maximum Speed rpm	Load (kgf) at Speed (rpm)														
		500 kgf	750 kgf	1000 kgf	1500 kgf	2000 kgf	2500 kgf	3000 kgf	3500 kgf	4000 kgf	4500 kgf	5000 kgf	5500 kgf	6000 kgf	6500 kgf	7000 kgf
VPF-A1001C	2800	31.0	–	23.0	–	17.0	–	14.0 *	–	–	–	–	–	–	–	–
VPF-A1001M	6500	–	–	–	19.0	–	15.0	–	–	–	12.0	–	–	–	10.0	–
VPF-A1002C	3000	34.0	–	25.0	–	18.0	–	15.0	–	–	–	–	–	–	–	–
VPF-A1002F	5000	–	–	25.0	21.0	–	–	15.0	–	–	–	12.0	–	–	–	–
VPF-A1003C	2250	36.0	–	26.0	22.0	–	18.0 *	–	–	–	–	–	–	–	–	–
VPF-A1003E	3750	36.0	–	26.0	–	19.0	–	–	–	15.0 *	–	–	–	–	–	–
VPF-A1003F	5500	–	–	–	22.0	–	18.0	–	–	14.0	–	–	12.0	–	–	–
VPF-A1153C	2300	53.0	–	39.0	32.0	–	27.0 *	–	–	–	–	–	–	–	–	–
VPF-A1303B	1950	46.0	–	34.0	28.0	25.0 *	–	–	–	–	–	–	–	–	–	–
VPF-A1303F	4000	–	–	34.0	–	25.0	–	21.0	–	18.0	–	–	–	–	–	–
VPF-A1304A	1600	48.0	40.0	36.0 *	–	29.0 *	–	–	–	–	–	–	–	–	–	–
VPF-A1304D	3000	48.0	–	36.0	–	26.0	–	22.0	–	–	–	–	–	–	–	–
VPF-B1001M	6000	–	–	–	–	17.0	–	14.0	–	12.0	–	–	–	10.0	–	–
VPF-B1002E	3300	34.0	–	25.0	–	18.0	–	–	15.0 *	–	–	–	–	–	–	–
VPF-B1002M	6000	–	–	–	21.0	–	–	15.0	–	–	13.0	–	–	11.0	–	–
VPF-B1003C	2500	36.0	–	26.0	22.0	–	18.0	–	–	–	–	–	–	–	–	–
VPF-B1003F	4750	–	–	26.0	22.0	–	–	16.0	–	–	–	13.0 *	–	–	–	–
VPF-B1003T	7000	–	–	–	22.0	–	18.0	–	–	–	13.0	–	–	–	–	11.0
VPF-B1153E	3200	53.0	–	39.0	–	29.0	–	–	23.0*	–	–	–	–	–	–	–
VPF-B1153F	5000	–	–	39.0	–	29.0	–	24.0	–	–	–	19.0	–	–	–	–
VPF-B1303C	2250	46.0	–	34.0	28.0	–	24.0 *	–	–	–	–	–	–	–	–	–
VPF-B1303F	4000	–	–	34.0	–	25.0	–	21.0 *	–	18.0	–	–	–	–	–	–
VPF-B1304C	2150	48.0	–	36.0	31.0 *	–	25.0 *	–	–	–	–	–	–	–	–	–
VPF-B1304E	3500	–	–	36.0	30.0	–	25.0 *	–	20.0	–	–	–	–	–	–	–
VPF-B1652C	2700	64.0	–	47.0	39.0	–	–	30.0 *	–	–	–	–	–	–	–	–

(1) 1.0 kgf = 2.2 lbf or 9.8 N. An asterisk (*) indicates a load rating measured at an rpm value that is less than the value listed for that column.

Axial Load Force Ratings (zero radial load) for Brake Motors

Motor Cat. No. (1)	Maximum Speed rpm	Load (kgf) at Speed (rpm)														
		500 kgf	750 kgf	1000 kgf	1500 kgf	2000 kgf	2500 kgf	3000 kgf	3500 kgf	4000 kgf	4500 kgf	5000 kgf	5500 kgf	6000 kgf	6500 kgf	7000 kgf
VPF-A1001C	2800	49.4	–	36.5	–	27.0	–	23.4 *	–	–	–	–	–	–	–	–
VPF-A1001M	6500	–	–	–	30.6	–	24.5	–	–	–	19.0	–	–	–	16.2	–
VPF-A1002C	3000	49.4	–	36.5	–	27.0	–	22.7	–	–	–	–	–	–	–	–
VPF-A1002F	5000	–	–	36.5	30.6	–	–	22.7	–	–	–	18.2	–	–	–	–
VPF-A1003C	2250	49.4	–	36.5	30.6	–	25.7 *	–	–	–	–	–	–	–	–	–
VPF-A1003E	3750	49.4	–	36.5	–	27.0	–	–	–	20.6 *	–	–	–	–	–	–
VPF-A1003F	5500	–	–		30.6	–	24.5	–	–	20.0	–	–	17.4	–	–	–
VPF-A1153C	2300	68.3	–	50.5	42.4	–	35.2 *	–	–	–	–	–	–	–	–	–
VPF-A1303B	1950	68.3	–	50.5	42.4	37.8 *	–	–	–	–	–	–	–	–	–	–
VPF-A1303F	4000	–	–	50.5	–	37.4	–	31.4	–	27.7	–	–	–	–	–	–
VPF-A1304A	1600	68.3	57.2	51.1 *	–	41.2 *	–	–	–	–	–	–	–	–	–	–
VPF-A1304D	3000	68.3	–	50.5	–	37.4	–	31.4	–	–	–	–	–	–	–	–
VPF-B1001M	6000	–	–	–	–	27.0	–	22.7	–	20.0	–	–	–	16.8	–	–
VPF-B1002E	3300	49.4	–	36.5	–	27.0	–	–	21.8 *	–	–	–	–	–	–	–
VPF-B1002M	6000	–	–	–	30.6	–	–	22.7	–	–	19.0	–	–	16.8	–	–
VPF-B1003C	2500	49.4	–	36.5	30.6	–	24.5	–	–	–	–	–	–	–	–	–
VPF-B1003F	4750	–	–	36.5	30.6	–	–	22.7	–	–	–	18.6 *	–	–	–	–
VPF-B1003T	7000	–	–	–	30.6	–	24.5	–	–	–	19.0	–	–	–	–	15.7
VPF-B1153E	3200	68.3	–	50.5	–	37.4	–	–	30.5 *	–	–	–	–	–	–	–
VPF-B1153F	5000	–	–	50.5	–	37.4	–	31.4	–	–	–	25.1	–	–	–	–
VPF-B1303C	2250	68.3	–	50.5	42.4	–	35.5 *	–	–	–	–	–	–	–	–	–
VPF-B1303F	4000	–	–	50.5	–	37.4	–	31.8 *	–	27.7	–	–	–	–	–	–
VPF-B1304C	2150	68.3	–	50.5	43.6 *	–	36.2 *	–	–	–	–	–	–	–	–	–
VPF-B1304E	3500	–	–	50.5	42.4	–	35.2 *	–	29.3	–	–	–	–	–	–	–
VPF-B1652C	2700	90.1	–	66.7	55.9	–	–	43.3 *	–	–	–	–	–	–	–	–

(1) 1.0 kgf = 2.2 lbf or 9.8 N. An asterisk (*) indicates a load rating measured at an rpm value that is less than the value listed for that column.

Dimensions - Kinetix VPF Servo Motors

VPF-A/B063*xx* and VPF-A/B075*xx* Motor Dimensions

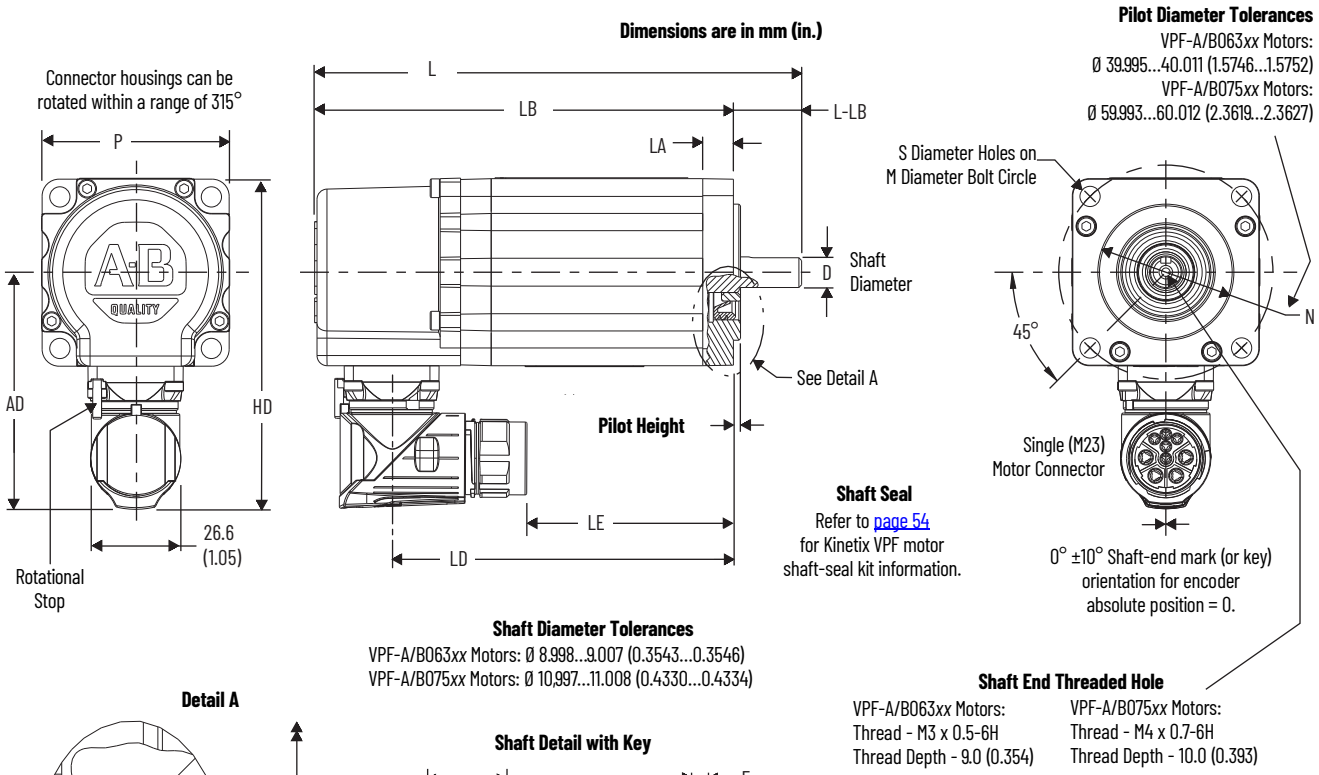

Shaft, Pilot, and Keyway Tolerances	VPF-A/B063*xx*	VPF-A/B075*xx*
Shaft Runout (T.I.R.)	0.030 (0.0012)	0.035 (0.0014)
Pilot Eccentricity (T.I.R.)	0.08 (0.0031)	0.08 (0.0031)
Max Face Runout (T.I.R.)	0.08 (0.0031)	0.08 (0.0031)
Keyway Depth (GE)	1.80...1.90 (0.071...0.075)	2.50...2.60 (0.098...0.102)
Keyway Width (F)	2.971...2.996 (0.117...0.118)	3.970...4.000 (0.156...0.158)

VPF-A/B063*xx* and VPF-A/B075*xx* Motor Dimensions

Motor Cat. No.	AD mm (in.)	HD mm (in.)	LA mm (in.)	LD (1) mm (in.)	LE (1) mm (in.)	L (1) mm (in.)	LB (1) mm (in.)	L-LB (2) mm (in.)	D (4) mm (in.)	M mm (in.)	S (3) mm (in.)	N (4) mm (in.)	P mm (in.)	GE (4) mm (in.)	F (4) mm (in.)
VPF-A/B0632	69.5 (2.74)	97.0 (3.82)	9.0 (0.35)	125.2 (4.93)	85.3 (3.36)	168.1 (6.61)	148.1 (5.83)	20.0 (0.787)	9.0 (0.354)	63.0 (2.480)	5.80 (0.234)	40.0 (1.575)	55.0 (2.17)	1.90 (0.075)	3.0 (0.118)
VPF-A/B0633				150.2 (5.91)	110.3 (4.34)	193.1 (7.59)	173.1 (6.81)								
VPF-A/B0752	77.0 (3.03)	112.0 (4.41)	9.0 (0.35)	127.0 (5.00)	87.1 (3.43)	172.9 (6.80)	149.9 (5.90)	23.0 (0.906)	11.0 (0.433)	75.0 (2.953)	5.80 (0.234)	60.0 (2.362)	70.0 (2.76)	2.60 (0.102)	4.0 (0.157)
VPF-A/B0753				152.0 (5.98)	112.1 (4.41)	197.9 (7.79)	174.9 (6.89)								

(1) If ordering an VPF-A/B063*xx* or VPF-A/B075*xx* motor with brake, add 30.6 mm (1.20 in.) to dimension L, LB, LE, and LD.
(2) Tolerance for this dimension is ±0.7 mm (±0.028 in.).
(3) Tolerance for this dimension is 0.3, -0.0 mm (±0.006 in.).
(4) For keyway, shaft diameter, and pilot diameter tolerances, see the Shaft, Pilot, and Keyway Tolerances table above.

Motors are designed to metric dimensions. Inch dimensions are approximate conversions from millimeters. Dimensions without tolerances are for reference.

VPF-A/B100*xx*, VPF-A/B115*xx*, VPF-A/B130*xx*, and VPF-B165*xx* Motor Dimensions (SpeedTec DIN connectors)

Dimensions are in mm (in.)

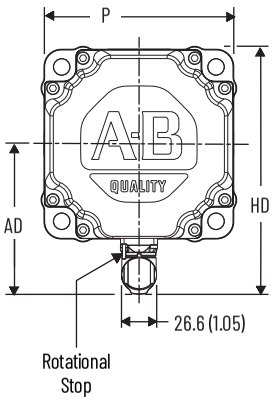

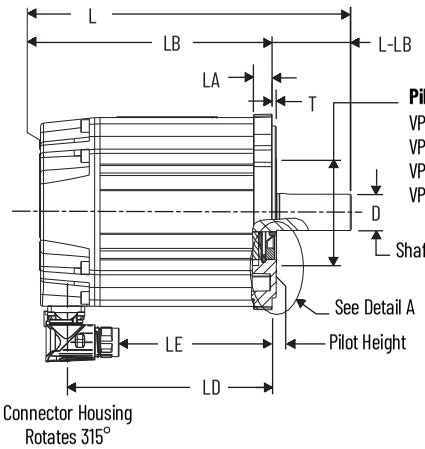

Pilot Relief Diameter
VPF-A/B100*xx* Motors = Ø 53.3 (2.10)
VPF-A/B115*xx* Motors = Ø 59.7 (2.35)
VPF-A/B130*xx* Motors = Ø 71.1 (2.80)
VPF-B165*xx* Motors = Ø 81.0 (3.19)

Shaft Seal
Refer to page 54 for Kinetix VPF motor shaft-seal kit information.

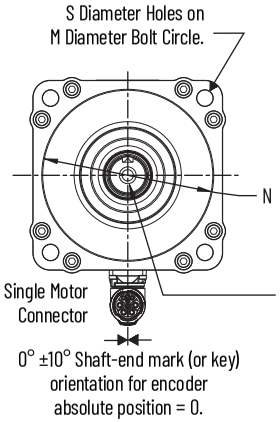

Pilot Diameter Tolerances
VPF-A/B100*xx* Motors:
Ø 79.993...80.012 (3.1493...3.1501)
VPF-A/B115*xx* Motors:
Ø 94.991...95.013 (3.7398...3.7407)
VPF-A/B130*xx* Motors:
Ø 109.991...110.013 (4.3303...4.3312)
VPF-B165*xx* Motors:
Ø 129.991...130.014 (5.1178...5.1187)

Shaft End Threaded Hole
VPF-A/B100*xx* Motors:
Thread - M5 x 0.8-6H
Thread Depth - 12.5 (0.49)
VPF-A/B115*xx* Motors:
Thread - M6 x 1.0-6H
Thread Depth - 16.0 (0.63)
VPF-A/B130*xx* Motors:
Thread - M8 x 1.25-6H
Thread Depth - 19.1 (0.75)
VPF-B165*xx* Motors:
Thread - M10 x 1.5-6H
Thread Depth - 22.1 (0.87)

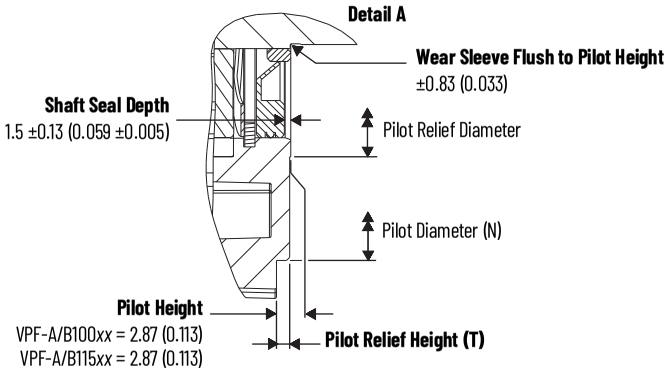

Shaft Diameter Tolerances
VPF-A/B100*xx* = Ø 15.997...16.008 (0.6298...0.6302)
VPF-A/B115*xx* = Ø 18.996...19.009 (0.7479...0.7483)
VPF-A/B130*xx* = Ø 23.996...24.009 (0.9448...0.9451)
VPF-B165*xx* = Ø 27.996...28.009 (1.1022...1.1027)

Keyway Length
VPF-A/B100*xx* = 25.4 (1.00)
VPF-A/B115*xx* = 25.4 (1.00)
VPF-A/B130*xx* = 32.3 (1.27)
VPF-B165*xx* = 41.1 (1.62)

Shaft Detail with Key

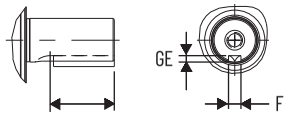

Key Supplied
VPF-A/B100*xx* = $5_{(+0,\ -0.030)}$ x $5_{(+0,\ -0.030)}$ x 22 Key
VPF-A/B115*xx* = $6_{(+0,\ -0.030)}$ x $6_{(+0,\ -0.030)}$ x 24 Key
VPF-A/B130*xx* = $8_{(+0,\ -0.036)}$ x $7_{(+0,\ -0.090)}$ x 31 Key
VPF-B165*xx* = $8_{(+0,\ -0.036)}$ x $7_{(+0,\ -0.090)}$ x 39 Key

Shaft, Pilot, and Keyway Tolerances	VPF-A/B100*xx*	VPF-A/B115*xx*	VPF-A/B130*xx* VPF-B165*xx*
Shaft Runout (T.I.R.)	0.04 (0.0016)		
Pilot Eccentricity (T.I.R.)	0.078 (0.0031)		
Max Face Runout (T.I.R.)	0.078 (0.0031)		
Keyway Depth (GE)	3.00...3.10 (0.118...0.122)	3.50...3.60 (0.138...0.142)	4.00...4.20 (0.158...0.165)
Keyway Width (F)	4.97...5.00 (0.196...0.197)	5.97...6.00 (0.235...0.236)	7.96...8.00 (0.314...0.315)

Motors are designed to metric dimensions. Inch dimensions are approximate conversions from millimeters. Dimensions without tolerances are for reference.

VPF-A/B100*xx*, VPF-A/B115*xx*, VPF-A/B130*xx*, and VPF-B165*xx* Motor Dimensions (SpeedTec DIN connectors)

Motor Cat. No.	AD mm (in.)	HD mm (in.)	T mm (in.)	LA mm (in.)	LD [1] mm (in.)	LE [1] mm (in.)	L [1] mm (in.)	LB [1] mm (in.)	L-LB [2] mm (in.)	D [3] mm (in.)	M mm (in.)	S mm (in.)	N [3] mm (in.)	P mm (in.)	GE [3] mm (in.)	F [3] mm (in.)
VPF-A/B1001	86.5 (3.40)	131.2 (5.17)	2.74 (0.108)	9.90 (0.39)	108.7 (4.28)	68.9 (2.71)	169.8 (6.68)	129.8 (5.11)	40.0 (1.575)	16.0 (0.630)	100.0 (3.937)	7.00 [4] (0.283)	80.0 (3.15)	89.4 (3.52)	3.0 (0.118)	5.0 (0.197)
VPF-A/B1002					134.1 (5.28)	94.3 (3.71)	195.2 (7.68)	155.2 (6.11)								
VPF-A/B1003					159.5 (6.28)	119.7 (4.71)	220.6 (8.68)	180.6 (7.11)								
VPF-A/B1153	90.8 (3.58)	140.0 (5.51)	2.74 (0.108)	10.16 (0.40)	156.0 (6.14)	116.1 (4.57)	217.0 (8.54)	177.0 (6.97)	40.0 (1.575)	19.0 (0.748)	115.0 (4.528)	10.00 [4] (0.401)	95.0 (3.74)	98.3 (3.87)	3.5 (0.138)	6.0 (0.236)
VPF-A/B1303	98.6 (3.88)	155.4 (6.12)	2.74 (0.108)	12.19 (0.48)	159.3 (6.27)	119.4 (4.70)	230.3 (9.06)	180.3 (7.10)	50.0 (1.969)	24.0 (0.945)	130.0 (5.118)	10.00 [4] (0.401)	110.0 (4.331)	113.7 (4.48)	4.0 (0.158)	8.0 (0.315)
VPF-A/B1304					184.7 (7.27)	144.8 (5.70)	255.7 (10.06)	205.7 (8.10)								
VPF-B1652	113.3 (4.46)	185.0 (7.28)	3.12 (0.123)	14.0 (0.55)	206.2 (8.12)	166.4 (6.55)	286.4 (11.27)	226.4 (8.92)	60.0 (2.362)	28.0 (1.102)	165.0 (6.496)	12.00 [5] (0.481)	130.0 (5.118)	143.5 (5.65)	4.0 (0.158)	8.0 (0.315)

(1) If ordering a VPF-A/B100*xx*-*xxx*4*xx* motor with brake, add 34.5 mm (1.36 in.) to dimensions L, LB, LE, and LD.
If ordering a VPF-A/B115*xx*-*xxx*4*xx* motor with brake, add 48.5 mm (1.91 in.) to dimensions L, LB, LE, and LD.
If ordering a VPF-A/B130*xx*-*xxx*4*xx* motor with brake, add 48.5 mm (1.91 in.) to dimensions L, LB, LE, and LD.
If ordering a VPF-B165*xx*-*xxx*4*xx* motor with brake, add 51.5 mm (2.03 in.) to dimensions L, LB, LE, and LD.
(2) Tolerance for this dimension is ±0.7 mm (±0.028 in.).
(3) For keyway, shaft diameter, and pilot diameter tolerances, refer to page 68.
(4) Tolerance for this dimension is +0.36, -0.0 mm (±0.007 in.).
(5) Tolerance for this dimension is +0.43 -0.0 mm (±0.008 in.).

Motors are designed to metric dimensions. Inch dimensions are approximate conversions from millimeters. Dimensions without tolerances are for reference.

Kinetix VPH Hygienic Stainless-steel Servo Motors



Kinetix VPH servo motors are specifically designed to meet the unique needs of washdown environments such as those found in food and beverage, dairy, meat processing, and pharmaceutical manufacturing equipment. The enhanced hygienic design includes a 316-grade stainless-steel housing that provides a reliable and convenient solution to the requirements of machine cleaning and hygienic operations.

Windings are matched to the ratings of Kinetix 5500 drives, Kinetix 5700 drives, and ArmorKinetix DSD modules to optimize system sizing, lower system cost, and improve energy efficiency. The Kinetix 2090 single cable design between motor and drive simplifies installation.

Kinetix VPH Servo Motor Features

Attribute	Value
Main characteristics	• Design per EHEDG guidelines for smooth surface and liquid collection. For use with high-pressure, highly-caustic washdown applications. • Kinetix 2090 single cable technology • Hiperface DSL encoder protocol • Low rotor inertia
Features	• Smooth, passivated, 316 grade stainless-steel cylindrical exterior • Designed per EHEDG guidelines • 3A certified • Certified and listed to NSF/ANSI Standard 169 • 200V and 400V-class windings • Single-turn and multi-turn absolute feedback • SIL 2 (PLd) rated encoder options • Shaft-end threaded hole • On-motor cable extensions available in 1…15 m (3.2 ft…49.2 ft) lengths • High-energy rare-earth magnets • Standard IEC 72-1 mounting dimensions
Motor type	Brushless AC synchronous servo motors
Environmental rating	• IP66/IP67 with shaft seal (standard) and use of Rockwell Automation factory-delivered Kinetix 2090 cables • IP69K for 1200 psi motor washdown (1)
Certifications	Kinetix VPH rotary motors are UL Recognized components to applicable UL and CSA standards. CE and UK marked for all applicable directives. Refer to rok.auto/certifications for the Product Certification website.
Continuous stall torque	0.80…19 N•m (7…165 lb•in)
Peak stall torque	2.76…67.8 N•m (24…600 lb•in)
Rated speed	2300…8000 rpm
Motor rated output	0.40…3.16 kW (0.54…4.23 Hp)
Compatible servo drives	• Kinetix 5700 • Kinetix 5500 • ArmorKinetix DSD
Compatible servo cables	• 2090-CS*x*M1*xx*-*xx*AA/AF*xx* (TPE) cables • 2090-CS*x*M1*xx*-*xx*VA/LF*xx* (PVC and PUR) cables • 2090-CSBM1P7-14AFxx (PUR) cables
Typical applications	• Meat, poultry, dairy, food and beverage processing • Food slicing and filling • Raw food handling • Life science • Consumer products

(1) The cable connectors are rated IP66/IP67 and are not designed to withstand high-pressure washdown or washdown with aggressive cleaning compounds. Position connectors away from direct exposure to cleaning processes, for example, within washdown-rated conduit or junction boxes.

Refer to the Kinetix VPH Hygienic Stainless-steel Servo Motor Installation Instructions, publication VPH-IN001, for mounting and installation information.

Catalog Numbers - Kinetix VPH Servo Motors

Catalog numbers consist of various characters, each of which identifies a specific option for that component. Use the catalog numbering table chart below to understand the configuration of your motor. For questions regarding product availability, contact your Allen-Bradley distributor.

VP H - x xxx x x - x J x x D xx

On-motor Cable Length
01 = 1 m (3.2 ft) continuous-flex rated
03 = 3 m (9.8 ft) continuous-flex rated
05 = 5 m (16.4 ft) continuous-flex rated
07 = 7 m (22.9 ft) continuous-flex rated
09 = 9 m (29.5 ft) standard, non-flex rated
12 = 12 m (39.4 ft) standard, non-flex rated
15 = 15 m (49.2 ft) standard, non-flex rated

IEC Metric, tapped mounting hole with:
D = Single cable

Brake
2 = No brake
4 = 24V DC holding brake

Connectors (1)
1 = Single SpeedTec DIN connector
0 = Flying leads

Shaft Key
J = Shaft key

Feedback
C = 18-bit absolute single-turn digital encoder (Hiperface DSL protocol)
W = 18-bit absolute multi-turn digital encoder (Hiperface DSL protocol) SIL 2 (PLd) rated, 9-bit secondary safety channel (2)
Q = 23-bit absolute multi-turn digital encoder (Hiperface DSL protocol) SIL 2 (PLd) rated, 12-bit secondary safety channel (3)

Rated Speed (4)

C = 2300 rpm	F = 4500...6600 rpm
D = 3000 rpm	M= 6700 rpm
E = 3300...3900 rpm	T = 7200...8000 rpm

Magnet Stack Length (1, 2, 3, 4 stacks) (5)

Frame Size - Bolt Circle Diameter (BCD)

063 = 63 mm	115 = 115 mm
075 = 75 mm	130 = 130 mm
100 = 100 mm	165 = 165 mm

Voltage Class
A = 200V
B = 400V

Series Type
H = Hygienic stainless steel

Series
VP = Permanent magnet rotary servo motors that are optimized to Kinetix 5500 and Kinetix 5700 drive ratings

(1) Option 1 includes nickel-plated mating on-motor cable connector to 2090-CSxM1Dx single cable. Option 0 (flying leads) connects directly to DSL feedback connector kit and motor/brake connectors on the drive.
(2) This encoder option is available with only VPH-A/B063xx and VPH-A/B075xx motor frame sizes.
(3) This encoder option is available with only VPH-A/B100xx, VPH-A/B115xx, VPH-A/B130xx, and VPH-B165xx motor frame sizes.
(4) Rated speed hierarchy is only for comparative purposes. Use Motion Analyzer software to size and select motors for your application, and/or the torque/speed curves in the Kinetix 5500 Drive System Design Guide, publication KNX-RM009, and the Kinetix 5700 Drive System Design Guide, publication KNX-RM010.
(5) Not all combinations are available. Only the configurations for magnet stack length as listed in Technical Specifications - Kinetix VPH Servo Motors on page 74 are available.

IMPORTANT The connector is O-ring sealed, but not designed to withstand direct high-pressure washdown with aggressive cleaning compounds. The 1...15 m (3.2...49.2 ft) cable extensions are provided so the connector can be positioned in an area away from direct exposure to the cleaning process, such as within washdown-rated conduit or junction boxes.

Kinetix VPH Servo Motor High-resolution Encoders

Kinetix VPH servo motors are available with high-performance encoders with a choice of single-turn (-C), and SIL 2 rated (-Q and -W) multi-turn high-resolution feedback:

- 18-bit resolution for 262,144 counts per revolution
  - Single-turn encoder (-C) provides absolute position feedback within one turn
  - Electromechanical design does not require a battery.
- SIL 2 rated absolute multi-turn digital encoder (Hiperface DSL protocol)
  - 23-bit resolution for 8,388,608 counts per revolution, multi-turn absolute position feedback within 4096 turns (-Q) option has 12-bit secondary safety channel
  - 18-bit resolution for 262,144 multi-turn absolute position feedback within 4096 turns (-W) option has 9-bit secondary safety channel

Kinetix 2090 Single Cable Technology

Motor connectivity reduced to a single connector and cable.

- Single cable eliminates hardware and wire terminations
- Purely digital two-wire communication integrated into the motor power cable
- Mating Kinetix 2090 single cables with:
  - TPE cable material for standard (non-flex) and continuous-flex cable
  - PVC cable material for standard (non-flex) and Halogen-free PUR continuous-flex cable
- Mating 2090-CSxM1D*x* cables are available in 1.0 m (3.2 ft) increments. Total cable length includes the on-motor extension cable and varies depending on cable type and drive family.
- 2090-CSBM1P7-14AFxx cables are available in 1 m (3.2 ft) increments up to 4 m (13.1 ft) for ArmorKinetix DSD modules

IMPORTANT The sum of the cables from the Kinetix VPH motor to the ArmorKinetix DSD module cannot exceed 4 m (13.1 ft).

Maximum Cable Length Including On-motor Cable Extension

Cable Cat. No.	Motor Cable Type	On-motor TPE Cable Extension m (ft)	Kinetix 5500 Drives (1) (2) (3) m (ft)	Kinetix 5700 Drives (1) (2) m (ft)
2090-CSxM1D*x*-*xxx*F*xx*	Single, continuous-flex cable	01 = 1 m (3.2 ft) 03 = 3 m (9.8 ft) 05 = 5 m (16.4 ft) 07 = 7 m (22.9 ft)	Cable length, max = 45 (148) Plus extension cable + 5 (16.4) Total cable length = 50 (164)	Cable length, max = 85 (279) Plus extension cable + 5 (16.4) Total cable length = 90 (295)
2090-CSxM1D*x*-*xxx*A*xx*	Single, standard (non-flex) cable	09 = 9 m (29.5 ft) 12 = 12 m (39.4 ft) 15 = 15 m (49.2 ft)		

(1) This table illustrates how the motor cable extension is included in the maximum cable length calculation. However, there are other variables to consider. See Kinetix 5500 Servo Drives User Manual, publication 2198-UM001, or Kinetix 5700 Servo Drives User Manual, publication 2198-UM002, for maximum cable length specifications specific to those drive families.
(2) In this example, the motor cable extension specified in the motor catalog number is 5 m (16.4 ft).
(3) Applies to all Kinetix 5500 (frame 2 and 3) drives. For Kinetix 5500 (frame 1) drives in continuous-flex applications or Kinetix VPH on-motor cable extensions from 1…7 m (3.2…22.9 ft), 30 m (98.4 ft) is the maximum cable length.

IMPORTANT Because of the unique characteristics of Kinetix 2090 single cable technology, designed for and tested with Kinetix 5500 drives, Kinetix 5700 dual-axis inverters, ArmorKinetix DSD modules, and Kinetix VPH servo motors; building your own cables, using field modified Rockwell Automation® factory-delivered cable, or using third-party cables is not an option.

On-motor Cable Connections-to-Drive Options

Kinetix VPH motors are available with flying leads that wire to a 2198-KITCON-DSL (feedback) connector kit and motor power and brake connectors on the drive or SpeedTec DIN connector that connects to 2090-CSxM1D*x* cables.

Kinetix VPH Servo Motors with Connector Option 1 (SpeedTec DIN connectors)

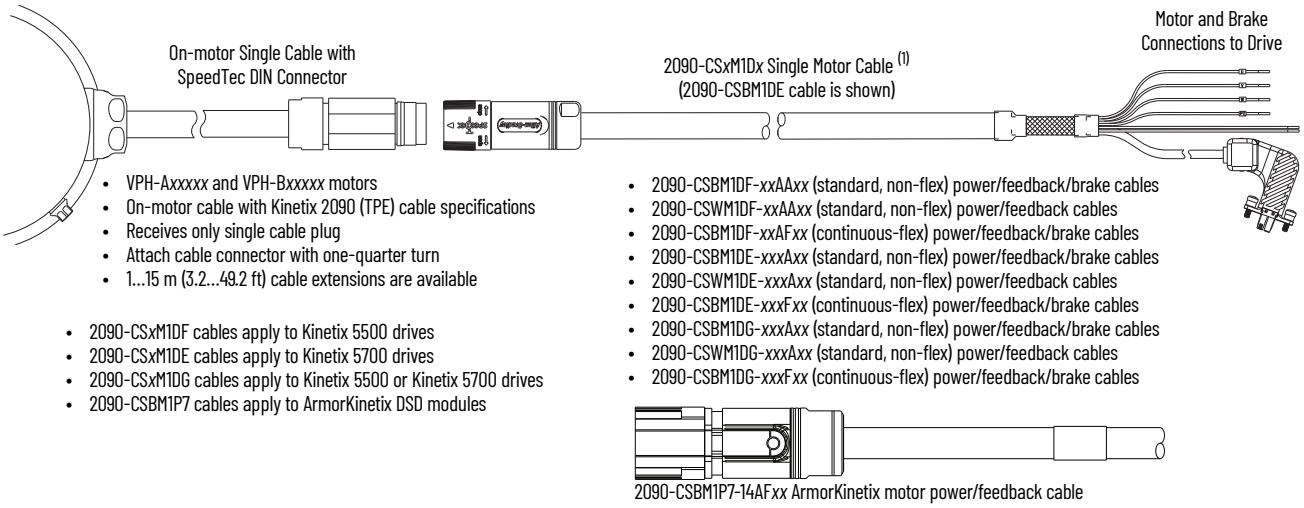

- VPH-A*xxxxx* and VPH-B*xxxxx* motors
- On-motor cable with Kinetix 2090 (TPE) cable specifications
- Receives only single cable plug
- Attach cable connector with one-quarter turn
- 1…15 m (3.2…49.2 ft) cable extensions are available

- 2090-CSxM1DF cables apply to Kinetix 5500 drives
- 2090-CSxM1DE cables apply to Kinetix 5700 drives
- 2090-CSxM1DG cables apply to Kinetix 5500 or Kinetix 5700 drives
- 2090-CSBM1P7 cables apply to ArmorKinetix DSD modules

- 2090-CSBM1DF-*xx*AA*xx* (standard, non-flex) power/feedback/brake cables
- 2090-CSWM1DF-*xx*AA*xx* (standard, non-flex) power/feedback cables
- 2090-CSBM1DF-*xx*AF*xx* (continuous-flex) power/feedback/brake cables
- 2090-CSBM1DE-*xxx*A*xx* (standard, non-flex) power/feedback/brake cables
- 2090-CSWM1DE-*xxx*A*xx* (standard, non-flex) power/feedback cables
- 2090-CSBM1DE-*xxx*F*xx* (continuous-flex) power/feedback/brake cables
- 2090-CSBM1DG-*xxx*A*xx* (standard, non-flex) power/feedback/brake cables
- 2090-CSWM1DG-*xxx*A*xx* (standard, non-flex) power/feedback cables
- 2090-CSBM1DG-*xxx*F*xx* (continuous-flex) power/feedback/brake cables

(1) The 2198-KITCON-DSL feedback connector kit is included with 2090-CSxM1DE cables.

Product specifications for Kinetix VPH on-motor cables are identical to 2090-CSxM1*xx* (TPE) motor cable. For Kinetix 2090 single cable specifications, refer to Kinetix Rotary and Linear Motion Cable Specifications Technical Data, publication KNX-TD004.

Kinetix VPH Servo Motors with Connector Option 0 (flying leads)

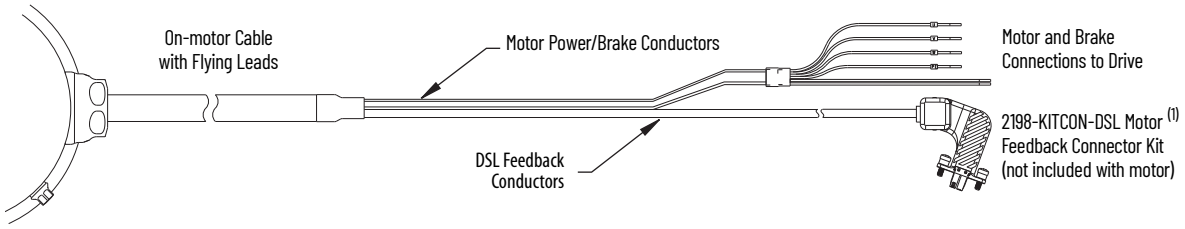

(1) The 2198-KITCON-DSL feedback connector kit is included with Kinetix 5500 drives and can be purchased separately. The kit is not included with Kinetix VPH servo motors.

Kinetix VPH Servo Motor Options

The following motor options are available for Kinetix VPH servo motors:

- The positive air-pressure kit (catalog number MPS-AIR-PURGE) consists of a single fitting that is used to connect a positive-pressure air supply line, 0.1 bar, max (1.45 psi), to the motor interior. Positive air pressure inside the motor provides an additional level of protection against the ingress of foreign substances and moisture. No special tool is required for installation and removal.
- Shaft seal kits are available for field replacement. Shaft seals (PTFE) include a lubricant to reduce wear.

IMPORTANT Shaft seals are subject to wear and require periodic inspection and replacement. Replacement is recommended every 3 months, not to exceed 12 months, depending on use.

Shaft Seal Kit Catalog Numbers

Motor Cat. No.	Shaft Seal Kit Cat. No.
VPH-A063*xx* and VPH-B063*xx*	VPH-SST-F063
VPH-A075*xx* and VPH-B075*xx*	VPH-SST-F075
VPH-A100*xx* and VPH-B100*xx*	VPH-SST-F100

Motor Cat. No.	Shaft Seal Kit Cat. No.
VPH-A115*xx* and VPH-B115*xx*	VPH-SST-F115
VPH-A130*xx* and VPH-B130*xx*	VPH-SST-F130
VPH-B165*xx*	VPH-SST-F165

- The O-ring kit is designed to seal the gap between the motor front end-bell and the mounting plate. Sealing this area helps prevent the ingress of liquids onto the shaft and shaft seal.

O-ring Kit Catalog Numbers

Motor Cat. No.	Shaft Seal Kit Cat. No.
VPH-A063*xx* and VPH-B063*xx*	VPH-F063-ORING
VPH-A075*xx* and VPH-B075*xx*	VPH-F075-ORING
VPH-A100*xx* and VPH-B100*xx*	VPH-F100-ORING

Motor Cat. No.	Shaft Seal Kit Cat. No.
VPH-A115*xx* and VPH-B115*xx*	VPH-F115-ORING
VPH-A130*xx* and VPH-B130*xx*	VPH-F130-ORING
VPH-B165*xx*	VPH-F165-ORING

Technical Specifications - Kinetix VPH Servo Motors

Kinetix VPH Servo Motor (200V-class) Performance Specifications (non-brake)

Motor Cat. No.	Rated Speed rpm	Maximum Speed rpm	Continuous Stall Torque N•m (lb•in)	Peak Stall Torque N•m (lb•in)	Motor Rated Output kW (Hp)	Rotor Inertia kg-m^2 (lb•in•s^2)	Motor Weight, approx kg (lb)
VPH-A0633F-*xxx*2	4500	4500	1.09 (9.7)	4.09 (36.0)	0.45 (0.61)	0.0000255 (0.00022)	6.2 (13.67)
VPH-A0753F-*xxx*2	4600	4600	1.90 (16.8)	7.0 (62.0)	0.68 (0.92)	0.0000373 (0.00033)	8.2 (18.08)
VPH-A1003F-*xxx*2	5500	5500	3.41 (30.1)	11.15 (99.0)	1.32 (1.77)	0.000114 (0.00100)	12.7 (28.0)
VPH-A1152E-*xxx*2	3300	3300	4.04 (35.8)	13.12 (116)	1.07 (1.43)	0.000268 (0.00237)	13.3 (29.33)
VPH-A1153C-*xxx*2	2300	2300	5.17 (45.8)	20.33 (180)	1.11 (1.49)	0.000391 (0.00346)	15.3 (33.74)
VPH-A1304D-*xxx*2	3000	3000	8.44 (74.7)	27.1 (240)	1.79 (2.40)	0.000533 (0.00471)	22.9 (50.49)

Kinetix VPH Servo Motor (200V-class) Performance Specifications (brake)

Motor Cat. No.	Rated Speed rpm	Maximum Speed rpm	Continuous Stall Torque N•m (lb•in)	Peak Stall Torque N•m (lb•in)	Motor Rated Output kW (Hp)	Rotor Inertia kg-m^2 (lb•in•s^2)	Motor Weight, approx kg (lb)
VPH-A0633F-*xxx*4	4500	4500	1.07 (9.5)	4.09 (36.0)	0.43 (0.57)	0.0000269 (0.00023)	7.1 (15.66)
VPH-A0753F-*xxx*4	4600	4600	1.73 (15.3)	7.0 (62.0)	0.60 (0.80)	0.0000386 (0.00034)	9.2 (20.29)
VPH-A1003F-*xxx*4	5500	5500	3.18 (28.2)	11.15 (99.0)	1.06 (1.42)	0.000123 (0.00108)	14.6 (32.19)
VPH-A1152E-*xxx*4	3300	3300	4.00 (35.4)	13.12 (116)	1.07 (1.43)	0.000287 (0.00254)	15.6 (34.4)
VPH-A1153C-*xxx*4	2300	2300	5.03 (44.5)	20.33 (180)	1.11 (1.49)	0.000409 (0.00361)	17.5 (38.59)
VPH-A1304D-*xxx*4	3000	3000	8.27 (73.2)	27.1 (240)	1.79 (2.40)	0.000548 (0.00485)	26.1 (57.55)

Kinetix VPH Servo Motor (400V-class) Performance Specifications (non-brake)

Motor Cat. No.	Rated Speed rpm	Maximum Speed rpm	Continuous Stall Torque N•m (lb•in)	Peak Stall Torque N•m (lb•in)	Motor Rated Output kW (Hp)	Rotor Inertia kg-m^2 (lb•in•s^2)	Motor Weight, approx kg (lb)
VPH-B0632T-*xxx*2	8000	8000	0.84 (7.5)	2.69 (24.0)	0.52 (0.69)	0.0000179 (0.00015)	5.5 (12.13)
VPH-B0633M-*xxx*2	6700	6700	1.03 (9.2)	4.09 (36.0)	0.50 (0.67)	0.0000255 (0.00022)	6.2 (13.67)
VPH-B0753F-*xxx*2	6600	6600	1.87 (16.6)	7.02 (62.2)	0.74 (0.99)	0.0000373 (0.00033)	8.2 (18.08)
VPH-B1001F-*xxx*2	5000	5000	1.44 (12.8)	3.61 (32.0)	0.70 (0.93)	0.0000438 (0.00038)	9.2 (20.29)
VPH-B1003F-*xxx*2	4750	4750	3.43 (30.4)	11.15 (99.0)	1.36 (1.83)	0.000114 (0.00100)	12.7 (28.00)
VPH-B1152F-*xxx*2	4500	4500	4.03 (35.7)	13.12 (116)	1.37 (1.84)	0.000268 (0.00237)	13.3 (29.33)
VPH-B1153E-*xxx*2	3900	5000	5.13 (45.4)	20.33 (180)	1.27 (1.70)	0.000391 (0.00346)	15.3 (33.74)
VPH-B1304E-*xxx*2	3500	3500	8.41 (74.5)	28.45 (252)	2.15 (2.88)	0.000533 (0.00471)	22.9 (50.49)
VPH-B1653D-*xxx*2	3000	3000	18.67 (165)	67.80 (600)	3.16 (4.23)	0.00214 (0.01894)	37.7 (83.13)

Kinetix VPH Servo Motor (400V-class) Performance Specifications (brake)

Motor Cat. No.	Rated Speed rpm	Maximum Speed rpm	Continuous Stall Torque N•m (lb•in)	Peak Stall Torque N•m (lb•in)	Motor Rated Output kW (Hp)	Rotor Inertia kg-m^2 (lb•in•s^2)	Motor Weight, approx kg (lb)
VPH-B0632T-*xxx*4	7200	8000	0.80 (7.1)	2.69 (24.0)	0.40 (0.54)	0.0000193 (0.00017)	6.5 (14.33)
VPH-B0633M-*xxx*4	6700	6700	1.01 (8.9)	4.09 (36.0)	0.50 (0.67)	0.0000269 (0.00023)	7.1 (15.66)
VPH-B0753F-*xxx*4	6600	6600	1.81 (16.0)	7.02 (62.2)	0.68 (0.92)	0.0000386 (0.00034)	9.2 (20.29)
VPH-B1001F-*xxx*4	5000	5000	1.42 (12.6)	3.61 (32.0)	0.68 (0.91)	0.0000533 (0.00047)	11.2 (24.70)
VPH-B1003F-*xxx*4	4750	4750	3.29 (29.1)	11.15 (99.0)	1.16 (1.56)	0.000123 (0.00108)	14.6 (32.19)
VPH-B1152F-*xxx*4	4500	4500	4.03 (35.7)	13.12 (116)	1.37 (1.84)	0.000287 (0.00254)	15.6 (34.40)
VPH-B1153E-*xxx*4	3900	5000	5.13 (45.4)	20.33 (180)	1.08 (1.45)	0.000409 (0.00361)	17.5 (38.59)
VPH-B1304E-*xxx*4	3500	3500	8.24 (73.0)	28.45 (252)	1.76 (2.36)	0.000548 (0.00485)	26.1 (57.55)
VPH-B1653D-*xxx*4	3000	3000	18.67 (165)	67.80 (600)	2.91 (3.91)	0.0022 (0.01947)	41.0 (90.41)

Kinetix VPH Servo Motor Brake Specifications

Motor Cat. No.	Backlash, max (brake engaged) arc minutes	Holding Torque N•m (lb•in)	Coil Current at 24V DC A	Brake Response Time	
				Release ms	Engage (1) ms
VPH-A/B0632	30	1.50 (13)	0.33	46	34
VPH-A/B0633					
VPH-A/B0753		3.00 (27)	0.63	80	101
VPH-A/B1001		4.18 (37)	0.50	108	144
VPH-A/B1003					
VPH-A/B1152		6.55 (58)	0.69	108	134
VPH-A/B1153					
VPH-A/B1304		14.1 (125)	0.82	150	208
VPH-B1653		32.0 (283)	1.17	168	144

(1) By using diode and zener diode as arc suppression device in external control circuit.

On-motor Cable Weight Specifications

Motor Cat. No.	Cable Type	Cable Options		Cable Length m (ft)	Cable Weight, approx kg (lb)	
					Frame 063 and 075	Frame 100, 115, 130, 165
VPH-A/B*xxxxx*-xJ0xD01	Continuous-flex	Flying leads	01	1 (3.2)	0.3 (0.7)	0.4 (0.9)
VPH-A/B*xxxxx*-xJ1xD01		Connector			0.4 (0.9)	0.5 (1.1)
VPH-A/B*xxxxx*-xJ0xD03		Flying leads	03	3 (9.8)	0.9 (2.0)	1.2 (2.6)
VPH-A/B*xxxxx*-xJ1xD03		Connector			1.2 (2.6)	1.5 (3.3)
VPH-A/B*xxxxx*-xJ0xD05		Flying leads	05	5 (16.4)	1.5 (3.3)	1.6 (3.4)
VPH-A/B*xxxxx*-xJ1xD05		Connector			2.0 (4.3)	2.5 (5.5)
VPH-A/B*xxxxx*-xJ0xD07		Flying leads	07	7 (22.9)	2.1 (4.6)	2.7 (6.0)
VPH-A/B*xxxxx*-xJ1xD07		Connector			2.7 (6.0)	3.5 (7.7)
VPH-A/B*xxxxx*-xJ0xD09	Standard (non-flex)	Flying leads	09	9 (29.5)	2.7 (5.9)	3.5 (7.7)
VPH-A/B*xxxxx*-xJ1xD09		Connector			3.5 (7.7)	4.7 (10.3)
VPH-A/B*xxxxx*-xJ0xD12		Flying leads	12	12 (39.4)	3.6 (7.8)	4.7 (10.2)
VPH-A/B*xxxxx*-xJ1xD12		Connector			4.7 (10.2)	5.6 (12.3)
VPH-A/B*xxxxx*-xJ0xD15		Flying leads	15	15 (49.2)	4.5 (9.8)	5.8 (12.8)
VPH-A/B*xxxxx*-xJ1xD15		Connector			5.8 (12.8)	6.7 (14.8)

On-motor Cable Gauge Specifications

Motor Cat. No.	Cable Gauge (1)
VPH-A/B063*xx*, VPH-A/B075*xx*	18
VPH-A/B100*xx*, VPH-A/B115*xx*	14
VPH-A/B130*xx*, VPH-A/B165*xx*	

(1) For mating 2090-CS*x*M1D*x* single cable, refer to Kinetix Rotary and Linear Motion Cable Specifications Technical Data, publication KNX-TD004.

Kinetix VPH Servo Motor Load Force Ratings

Kinetix VPH servo motors are capable of operating with the maximum radial or maximum axial shaft loads listed in the following tables. Radial loads listed are applied in the middle of the shaft extension. The tables starting below represent an L_{10} bearing fatigue life of 20,000 hours. This 20,000-hour life does not account for possible application-specific life reduction that can occur due to bearing grease contamination from external sources. Maximum operating speed is limited by motor winding.

Load Forces on Shaft

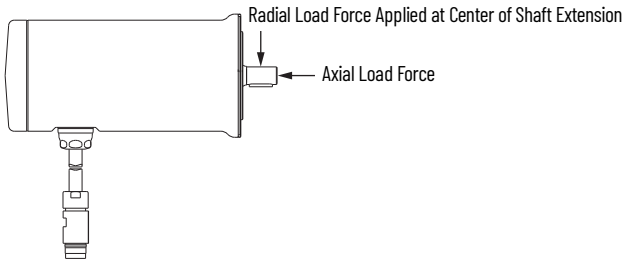

Radial Load Force Ratings for Non-brake Motors

Motor Cat. No. (1)	Maximum Speed rpm	Load (kgf) at Speed (rpm)															
		500 kgf	1000 kgf	1500 kgf	2000 kgf	2500 kgf	3000 kgf	3500 kgf	4000 kgf	4500 kgf	5000 kgf	5500 kgf	6000 kgf	6500 kgf	7000 kgf	7500 kgf	8000 kgf
VPH-A0633F	4500	37.2	29.5	25.8	23.4	21.7	20.5	19.4	18.6	17.9	–	–	–	–	–	–	–
VPH-A0753F	4600	38.2	30.3	26.5	24.0	22.3	21.0	20.0	19.1	18.4	17.7*	–	–	–	–	–	–
VPH-A1003F	5500	93.6	74.3	64.9	59.0	54.7	51.5	48.9	46.8	45.0	43.4	42.1	–	–	–	–	–
VPH-A1152E	3300	102.2	81.1	70.8	64.4	59.8	56.2	53.4*	–	–	–	–	–	–	–	–	–
VPH-A1153C	2300	108.6	86.2	75.3	68.4	63.5*	–	–	–	–	–	–	–	–	–	–	–
VPH-A1304D	3000	142.7	113.2	98.9	89.9	83.4	78.5	–	–	–	–	–	–	–	–	–	–
VPH-B0632T	8000	35.4	28.1	24.5	22.3	20.7	19.5	18.5	17.7	17	16.4	15.9	15.5	15.0	14.7	14.3	14.0
VPH-B0633M	6700	37.2	29.5	25.8	23.4	21.7	20.5	19.4	18.6	17.9	17.3	16.7	16.2	15.8	15.4*	–	–
VPH-B0753F	6600	38.2	30.3	26.5	24.0	22.3	21.0	20.0	19.1	18.4	17.7	17.2	16.7	16.2	15.8*	–	–
VPH-B1001F	5000	79.9	63.4	55.4	50.3	46.7	44.0	41.8	40.0	38.4	37.1	–	–	–	–	–	–
VPH-B1003F	4750	93.6	74.3	64.9	59.0	54.7	51.5	48.9	46.8	45.0	43.4*	–	–	–	–	–	–
VPH-B1152F	4500	102.2	81.1	70.8	64.4	59.8	56.2	53.4	51.1	49.1	–	–	–	–	–	–	–
VPH-B1153E	5000	108.6	86.2	75.3	68.4	63.5	59.7	56.7	54.3	52.2	50.4	–	–	–	–	–	–
VPH-B1304E	3500	142.7	113.2	98.9	89.9	83.4	78.5	74.6	–	–	–	–	–	–	–	–	–
VPH-B1653D	3000	193.4	153.5	134.1	121.8	113.1	106.4	–	–	–	–	–	–	–	–	–	–

(1) 1.0 kgf = 2.2 lbf or 9.8 N. An asterisk (*) indicates a load rating measured at an rpm value that is less than the value listed for that column.

Axial Load Force Ratings with Maximum Radial Load for Non-brake Motors

Motor Cat. No. (1)	Maximum Speed rpm	Load (kgf) at Speed (rpm)															
		500 kgf	1000 kgf	1500 kgf	2000 kgf	2500 kgf	3000 kgf	3500 kgf	4000 kgf	4500 kgf	5000 kgf	5500 kgf	6000 kgf	6500 kgf	7000 kgf	7500 kgf	8000 kgf
VPH-A0633F	4500	12.7	9.4	7.9	6.9	6.3	5.8	5.4	5.1	4.9	–	–	–	–	–	–	–
VPH-A0753F	4600	12.7	9.4	7.9	6.9	6.3	5.8	5.4	5.1	4.9	4.7*	–	–	–	–	–	–
VPH-A1003F	5500	33.0	24.4	20.5	18.0	16.4	15.1	14.2	13.4	12.7	12.1	11.6	–	–	–	–	–
VPH-A1152E	3300	38.2	28.2	23.7	20.9	19.0	17.5	16.4*	–	–	–	–	–	–	–	–	–
VPH-A1153C	2300	38.2	28.2	23.7	20.9	19.0*	–	–	–	–	–	–	–	–	–	–	–
VPH-A1304D	3000	48.9	36.2	30.4	26.8	24.3	22.5	–	–	–	–	–	–	–	–	–	–
VPH-B0632T	8000	12.7	9.4	7.9	6.9	6.3	5.8	5.4	5.1	4.9	4.7	4.5	4.3	4.2	4.0	3.9	3.8
VPH-B0633M	6700	12.7	9.4	7.9	6.9	6.3	5.8	5.4	5.1	4.9	4.7	4.5	4.3	4.2	4.0*	–	–
VPH-B0753F	6600	12.7	9.4	7.9	6.9	6.3	5.8	5.4	5.1	4.9	4.7	4.5	4.3	4.2	4.0*	–	–
VPH-B1001F	5000	33.0	24.4	20.5	18.0	16.4	15.1	14.2	13.4	12.7	12.1	–	–	–	–	–	–
VPH-B1003F	4750	33.0	24.4	20.5	18.0	16.4	15.1	14.2	13.4	12.7	12.1*	–	–	–	–	–	–
VPH-B1152F	4500	38.2	28.2	23.7	20.9	19.0	17.5	16.4	15.5	14.7	–	–	–	–	–	–	–
VPH-B1153E	5000	38.2	28.2	23.7	20.9	19.0	17.5	16.4	15.5	14.7	14.0	–	–	–	–	–	–
VPH-B1304E	3500	48.9	36.2	30.4	26.8	24.3	22.5	21.0	–	–	–	–	–	–	–	–	–
VPH-B1653D	3000	63.0	46.6	39.1	34.5	34.5	28.9	–	–	–	–	–	–	–	–	–	–

(1) 1.0 kgf = 2.2 lbf or 9.8 N. An asterisk (*) indicates a load rating measured at an rpm value that is less than the value listed for that column.

Axial Load Force Ratings with Zero Radial Load for Non-brake Motors

Motor Cat. No. (1)	Maximum Speed rpm	Load (kgf) at Speed (rpm)															
		500 kgf	1000 kgf	1500 kgf	2000 kgf	2500 kgf	3000 kgf	3500 kgf	4000 kgf	4500 kgf	5000 kgf	5500 kgf	6000 kgf	6500 kgf	7000 kgf	7500 kgf	8000 kgf
VPH-A0633F	4500	17.1	27.5	23.0	20.3	18.5	17.1	16.0	15.1	15.1	–	–	–	–	–	–	–
VPH-A0753F	4600	37.1	27.5	23.0	20.3	18.5	17.1	16.0	15.1	15.1	13.7*	–	–	–	–	–	–
VPH-A1003F	5500	96.5	71.4	71.4	52.8	52.8	44.3	41.4	39.1	37.2	35.5	34.1	–	–	–	–	–
VPH-A1152E	3300	39.4	82.6	82.6	61.2	55.5	51.3	48.0*	–	–	–	–	–	–	–	–	–
VPH-A1153C	2300	111.7	82.6	82.6	61.2	55.5*	–	–	–	–	–	–	–	–	–	–	–
VPH-A1304D	3000	71.2	106.0	88.9	78.5	71.2	65.8	–	–	–	–	–	–	–	–	–	–
VPH-B0632T	8000	17.1	27.5	23.0	20.3	18.5	17.1	17.1	15.1	14.3	13.7	13.7	12.6	12.2	11.8	11.8	11.1
VPH-B0633M	6700	11.1	27.5	27.5	20.3	18.5	17.1	16.0	15.1	14.3	13.7	13.1	12.6	12.6	11.8*	–	–
VPH-B0753F	6600	11.8	27.5	23.0	20.3	18.5	17.1	16.0	15.1	14.3	13.7	13.1	12.6	12.6	11.8*	–	–
VPH-B1001F	5000	96.5	71.4	59.9	52.8	48.0	44.3	41.4	39.1	37.2	35.5	–	–	–	–	–	–
VPH-B1003F	4750	96.5	71.4	71.4	52.8	52.8	44.3	41.4	39.1	37.2	35.5*	–	–	–	–	–	–
VPH-B1152F	4500	41.1	82.6	69.3	61.2	55.5	51.3	48.0	45.3	43.0	–	–	–	–	–	–	–
VPH-B1153E	5000	43.0	82.6	69.3	61.2	55.5	51.3	48.0	45.3	45.3	41.1	–	–	–	–	–	–
VPH-B1304E	3500	65.8	106.0	88.9	78.5	71.2	65.8	61.5	–	–	–	–	–	–	–	–	–
VPH-B1653D	3000	184.4	136.5	114.5	101.0	91.7	84.7	–	–	–	–	–	–	–	–	–	–

(1) 1.0 kgf = 2.2 lbf or 9.8 N. An asterisk (*) indicates a load rating measured at an rpm value that is less than the value listed for that column.

Radial Load Force Ratings for Brake Motors

Motor Cat. No. (1)	Maximum Speed rpm	Load (kgf) at Speed (rpm)															
		500 kgf	1000 kgf	1500 kgf	2000 kgf	2500 kgf	3000 kgf	3500 kgf	4000 kgf	4500 kgf	5000 kgf	5500 kgf	6000 kgf	6500 kgf	7000 kgf	7500 kgf	8000 kgf
VPH-A0633F	4500	38.7	30.7	26.8	24.4	22.6	21.3	20.2	19.3	18.6	–	–	–	–	–	–	–
VPH-A0753F	4600	39.4	31.3	27.3	24.8	23.0	21.7	20.6	19.7	18.9	18.3*	–	–	–	–	–	–
VPH-A1003F	5500	98.4	78.1	68.2	62	57.6	54.2	51.5	49.2	47.3	45.7	44.3	–	–	–	–	–
VPH-A1152E	3300	110.6	87.8	76.7	69.7	64.7	60.9	57.8*	–	–	–	–	–	–	–	–	–
VPH-A1153C	2300	114.7	91.1	79.6	72.3	67.1*	–	–	–	–	–	–	–	–	–	–	–
VPH-A1304D	3000	149.5	118.7	103.7	94.2	87.5	82.3	–	–	–	–	–	–	–	–	–	–
VPH-B0632T	8000	37.5	29.8	26.0	23.6	21.9	20.6	19.6	18.8	18.0	17.4	16.9	16.4	16.0	15.6	15.2	14.9
VPH-B0633M	6700	38.7	30.7	26.8	24.4	22.6	21.3	20.2	19.3	18.6	18.0	17.4	16.9	16.5	16.1*	–	–
VPH-B0753F	6600	39.4	31.3	27.3	24.8	23.0	21.7	20.6	19.7	18.9	18.3	17.7	17.2	16.7	16.3*	–	–
VPH-B1001F	5000	89.7	71.2	62.2	56.5	52.5	49.4	46.9	44.9	43.1	41.6	–	–	–	–	–	–
VPH-B1003F	4750	98.4	78.1	68.2	62	57.6	54.2	51.5	49.2	47.3	45.7*	–	–	–	–	–	–
VPH-B1152F	4500	110.6	87.8	76.7	69.7	64.7	60.9	57.8	55.3	53.2	–	–	–	–	–	–	–
VPH-B1153E	5000	114.7	91.1	79.6	72.3	67.1	63.1	60.0	57.4	55.2	53.3	–	–	–	–	–	–
VPH-B1304E	3500	149.5	118.7	103.7	94.2	87.5	82.3	78.2	–	–	–	–	–	–	–	–	–
VPH-B1653D	3000	199.8	158.6	138.5	125.8	116.8	109.9	–	–	–	–	–	–	–	–	–	–

(1) 1.0 kgf = 2.2 lbf or 9.8 N. An asterisk (*) indicates a load rating measured at an rpm value that is less than the value listed for that column.

Axial Load Force Ratings with Maximum Radial Load for Brake Motors

Motor Cat. No. (1)	Maximum Speed rpm	Load (kgf) at Speed (rpm)															
		500 kgf	1000 kgf	1500 kgf	2000 kgf	2500 kgf	3000 kgf	3500 kgf	4000 kgf	4500 kgf	5000 kgf	5500 kgf	6000 kgf	6500 kgf	7000 kgf	7500 kgf	8000 kgf
VPH-A0633F	4500	12.7	9.4	7.9	6.9	6.3	5.8	5.4	5.1	4.9	–	–	–	–	–	–	–
VPH-A0753F	4600	12.7	9.4	7.9	6.9	6.3	5.8	5.4	5.1	4.9	4.7*	–	–	–	–	–	–
VPH-A1003F	5500	33.0	24.4	20.5	18.0	16.4	15.1	14.2	13.4	12.7	12.1	11.6	–	–	–	–	–
VPH-A1152E	3300	38.2	28.2	23.7	20.9	19.0	17.5	16.4*	–	–	–	–	–	–	–	–	–
VPH-A1153C	2300	38.2	28.2	23.7	20.9	19.0*	–	–	–	–	–	–	–	–	–	–	–
VPH-A1304D	3000	48.9	36.2	30.4	26.8	24.3	22.5	–	–	–	–	–	–	–	–	–	–
VPH-B0632T	8000	12.7	9.4	7.9	6.9	6.3	5.8	5.4	5.1	4.9	4.7	4.5	4.3	4.2	4.0	3.9	3.8
VPH-B0633M	6700	12.7	9.4	7.9	6.9	6.3	5.8	5.4	5.1	4.9	4.7	4.5	4.3	4.2	4.0*	–	–
VPH-B0753F	6600	12.7	9.4	7.9	6.9	6.3	5.8	5.4	5.1	4.9	4.7	4.5	4.3	4.2	4.0*	–	–
VPH-B1001F	5000	33.0	24.4	20.5	18.0	16.4	15.1	14.2	13.4	12.7	12.1	–	–	–	–	–	–
VPH-B1003F	4750	33.0	24.4	20.5	18.0	16.4	15.1	14.2	13.4	12.7	12.1*	–	–	–	–	–	–
VPH-B1152F	4500	38.2	28.2	23.7	20.9	19.0	17.5	16.4	15.5	14.7	–	–	–	–	–	–	–
VPH-B1153E	5000	38.2	28.2	23.7	20.9	19.0	17.5	16.4	15.5	14.7	14.0	–	–	–	–	–	–
VPH-B1304E	3500	48.9	36.2	30.4	26.8	24.3	22.5	21.0	–	–	–	–	–	–	–	–	–
VPH-B1653D	3000	28.9	46.6	39.1	34.5	31.3	28.9	–	–	–	–	–	–	–	–	–	–

(1) 1.0 kgf = 2.2 lbf or 9.8 N. An asterisk (*) indicates a load rating measured at an rpm value that is less than the value listed for that column.

Axial Load Force Ratings with Zero Radial Load for Brake Motors

Motor Cat. No. (1)	Maximum Speed rpm	Load (kgf) at Speed (rpm)															
		500 kgf	1000 kgf	1500 kgf	2000 kgf	2500 kgf	3000 kgf	3500 kgf	4000 kgf	4500 kgf	5000 kgf	5500 kgf	6000 kgf	6500 kgf	7000 kgf	7500 kgf	8000 kgf
VPH-A0633F	4500	37.1	27.5	23.0	20.3	18.5	17.1	17.1	15.1	15.1	–	–	–	–	–	–	–
VPH-A0753F	4600	37.1	27.5	23.0	20.3	18.5	18.5	16.0	16.0	14.3	13.7*	–	–	–	–	–	–
VPH-A1003F	5500	96.5	71.4	59.9	52.8	48.0	44.3	41.4	39.1	39.1	35.5	35.5	–	–	–	–	–
VPH-A1152E	3300	111.7	111.7	69.3	61.2	55.5	51.3	48.0*	–	–	–	–	–	–	–	–	–
VPH-A1153C	2300	111.7	82.6	69.3	61.2	55.5*	–	–	–	–	–	–	–	–	–	–	–
VPH-A1304D	3000	65.8	106.0	88.9	78.5	71.2	65.8	–	–	–	–	–	–	–	–	–	–
VPH-B0632T	8000	11.1	27.5	23.0	20.3	18.5	17.1	16.0	15.1	14.3	13.7	13.1	12.6	12.6	11.8	11.8	11.1
VPH-B0633M	6700	37.1	37.1	23.0	20.3	18.5	17.1	16.0	15.1	14.3	13.7	13.1	12.6	12.2	11.8*	–	–
VPH-B0753F	6600	37.1	27.5	23.0	20.3	18.5	17.1	16.0	15.1	14.3	13.7	13.1	13.1	12.2	11.8*	–	–
VPH-B1001F	5000	35.5	71.4	71.4	52.8	48.0	44.3	41.4	39.1	39.1	35.5	–	–	–	–	–	–
VPH-B1003F	4750	96.5	96.5	59.9	52.8	48.0	44.3	41.4	39.1	37.2	35.5*	–	–	–	–	–	–
VPH-B1152F	4500	111.7	82.6	69.3	61.2	55.5	51.3	48.0	45.3	43.0	–	–	–	–	–	–	–
VPH-B1153E	5000	111.7	82.6	82.6	61.2	55.5	51.3	48.0	45.3	43.0	41.1	–	–	–	–	–	–
VPH-B1304E	3500	143.2	106.0	106	78.5	78.5	65.8	61.5	–	–	–	–	–	–	–	–	–
VPH-B1653D	3000	184.4	136.5	114.5	101.0	91.7	84.7	–	–	–	–	–	–	–	–	–	–

(1) 1.0 kgf = 2.2 lbf or 9.8 N. An asterisk (*) indicates a load rating measured at an rpm value that is less than the value listed for that column.

Dimensions - Kinetix VPH Servo Motors

VPH-A/B063*xx*, VPH-A/B075*xx*, VPH-A/B100*xx*, VPH-A/B115*xx*, VPH-A/B130*xx*, VPH-B165*xx* Motor Dimensions

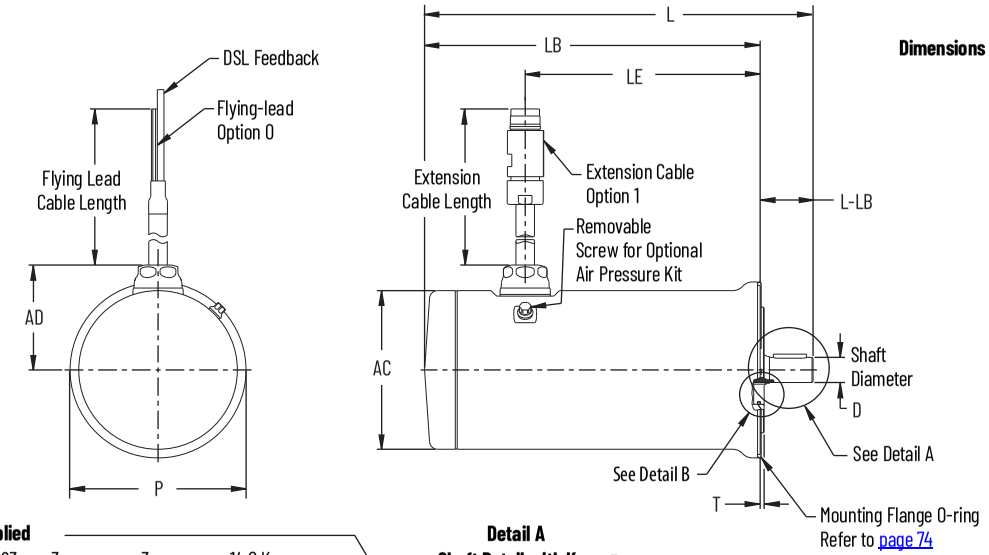

Dimensions are in mm (in.)

Pilot Diameter Tolerances

VPH-A/B063*xx* Motors:
Ø 39.995...40.011 (1.5746...1.5752)
VPH-A/B075*xx* Motors:
Ø 59.995...60.012 (2.3260...2.3627)
VPH-A/B100*xx* Motors:
Ø 79.993...80.012 (3.1493...3.1501)
VPH-A/B115*xx* Motors:
Ø 94.991...95.013 (3.7398...3.7407)
VPH-A/B130*xx* Motors:
Ø 109.991...110.013 (4.3303...4.3312)
VPH-B165*xx* Motors:
Ø 129.989...130.014 (5.1177...5.1187)

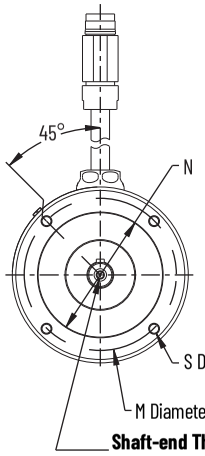

Key Supplied

VPH-A/B063*xx* = $3_{(+0,\ -0.025)}$ x $3_{(+0,\ -0.025)}$ x 14.0 Key
VPH-A/B075*xx* = $4_{(+0,\ -0.030)}$ x $4_{(+0,\ -0.030)}$ x 14.5 Key
VPH-A/B100*xx* = $5_{(+0,\ -0.030)}$ x $5_{(+0,\ -0.030)}$ x 25 Key
VPH-A/B115*xx* = $6_{(+0,\ -0.030)}$ x $6_{(+0,\ -0.030)}$ x 25 Key
VPH-A/B130*xx* = $8_{(+0,\ -0.036)}$ x $7_{(+0,\ -0.090)}$ x 32 Key
VPH-B165*xx* = $8_{(+0,\ -0.036)}$ x $7_{(+0,\ -0.090)}$ x 40 Key

Detail A
Shaft Detail with Key

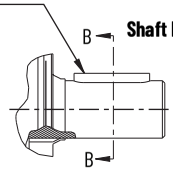

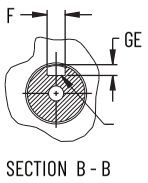

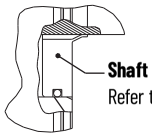

Shaft Seal
Refer to page 73

Detail B

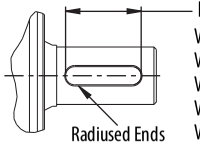

Keyway Length

VPH-A/B063*xx* Motors: 14.0...14.5 (0.55...0.57)
VPH-A/B075*xx* Motors: 14.5...15.0 (0.57...0.59)
VPH-A/B100*xx* and
VPH-A/B115*xx* Motors: 25.0...25.5 (0.984...1.004)
VPH-A/B130*xx* Motors: 32.0...32.5 (1.260...1.280)
VPH-B165*xx* Motors: 40.0...40.5 (1.57...1.59)

Shaft-end Threaded Hole

VPH-A/B063*xx* Motors:	VPH-A/B115*xx* Motors:
Thread - M3 x 0.5-6H	Thread - M6 x 1.0-6H
Thread Depth - 9.0 (0.354)	Thread Depth - 16.0 (0.63)
VPH-A/B075*xx* Motors:	VPH-A/B130*xx* Motors:
Thread - M4 x 0.7-6H	Thread - M8 x 1.25-6H
Thread Depth - 10.0 (0.393)	Thread Depth - 19 (0.75)
VPH-A/B100*xx* Motors:	VPH-B165*xx* Motors:
Thread - M5 x 0.8-6H	Thread - M10 x 1.5-6H
Thread Depth - 12.5 (0.49)	Thread Depth - 22 (0.87)

Flying Lead and Extension Cable Lengths, m (ft):
01 (3.2), 03 (9.8), 05 (16.4), 07 (22.9), 09 (29.5), 12 (39.4), 15 (49.2)
Specifications for the flying-lead and extension cables are identical to those of the 2090-CSxM1*xx*-*xx*AA/AF*xx* single motor cables. Refer to Kinetix Rotary and Linear Motion Cable Specifications Technical Data, publication KNX-TD004, for cable specifications.

Shaft Diameter Tolerances

VPH-A/B063*xx* Motors:
Ø 8.998...9.007 (0.3543...0.3546)
VPH-A/B075*xx* Motors:
Ø 10.997...11.008 (0.4330...0.4334)
VPH-A/B100*xx* Motors:
Ø 15.997...16.008 (0.6298...0.6302)
VPH-A/B115*xx* Motors:
Ø 18.996...19.009 (0.7479...0.7484)
VPH-A/B130*xx* Motors:
Ø 23.996...24.009 (0.9447...0.9452)
VPH-B165*xx* Motors:
Ø 27.996...28.009 (1.0632...1.1027)

Runout and Pilot Tolerances	VPH-A/B063	VPH-A/B075	VPH-A/B100	VPH-A/B115	VPH-A/B130	VPH-B165
Shaft Runout (T.I.R.)	0.03 (0.0012)	0.035 (0.0016)	0.035 (0.0016)	0.04 (0.0016)	0.04 (0.0016)	0.04 (0.0016)
Pilot Eccentricity (T.I.R.)	0.08 (0.0031)	0.08 (0.0031)	0.08 (0.0031)	0.08 (0.0031)	0.10 (0.0039)	0.10 (0.0039)
Max Face Runout (T.I.R.)	0.08 (0.0031)	0.08 (0.0031)	0.08 (0.0031)	0.08 (0.0031)	0.10 (0.0039)	0.10 (0.0039)

VPH-A/B063*xx*, VPH-A/B075*xx*, VPH-A/B100*xx*, VPH-A/B115*xx*, VPH-A/B130*xx*, VPH-B165*xx* Motor Dimensions

Motor Cat. No.	**AD** mm (in.)	**AC** mm (in.)	**T** mm (in.)	**LE** [1] mm (in.)	**L** mm (in.)	**LB** mm (in.)	**L-LB** mm (in.)	**D** mm (in.)	**M** mm (in.)	**S** mm (in.)	**N** mm (in.)	**P** mm (in.)	**GE** mm (in.)	F mm (in.)
VPH-A/B0632	58.5 (2.30)	81.9 (3.20)	1.30…2.50 (0.051…0.098)	125.9 (4.96)	230.6 (9.10)	200.6 (7.90)	30.0 (1.20)	9.0 (0.354)	63.0 (2.480)	M5x0.8-6H Depth: 11 (0.43)	40.0 (1.57)	81.9 (3.20)	1.80…1.90 (0.071…0.075)	2.969…2.994 (0.1169…0.1179)
VPH-A/B0633				150.9 (5.94)	255.6 (10.08)	225.6 (8.88)								
VPH-A/B0753	65.6 (2.60)	94.9 (3.70)	1.70…2.50 (0.067…0.098)	153.7 (6.05)	251.9 (9.91)	228.9 (9.01)	23.0 (0.90)	11.0 (0.433)	75.0 (2.953)		60.0 (2.36)	94.9 (3.70)	2.50…2.60 (0.098…0.102)	3.958…3.988 (0.1558…0.1570)
VPH-A/B1001	74.5 (2.90)	109.9 (4.33)	2.20…3.00 (0.087…0.118)	110.8 (4.36)	223.0 (8.78)	183.0 (7.20)	40.0 (1.57)	16.0 (0.630)	100.0 (3.937)	M6x1.0-6H Depth: 11 (0.43)	80.0 (3.15)	119.8 (4.72)	3.00…3.10 (0.118…0.122)	4.958…4.988 (0.1952…0.1964)
VPH-A/B1003				161.6 (6.36)	273.8 (10.77)	233.8 (9.20)								
VPH-A/B1152	79.3 (3.10)	119.9 (4.70)		141.8 (5.58)	257.9 (10.15)	217.9 (8.58)	40.0 (1.57)	19.0 (0.748)	115.0 (4.528)	M8x1.25-6H Depth: 13 (0.51)	95.0 (3.74)	133.0 (5.20)	3.50…3.60 (0.138…0.142)	5.958…5.988 (0.2346…0.2357)
VPH-A/B1153				167.2 (6.58)	283.3 (11.15)	243.3 (9.58)								
VPH-A/B1304	87.6 (3.40)	136.9 (5.40)	2.42…3.50 (0.095…0.138)	194.8 (7.67)	321.5 (12.66)	271.5 (10.69)	50.0 (1.97)	24.0 (0.945)	130.0 (5.118)	M8x1.25-6H Depth: 16 (0.63)	110.0 (4.33)	155.1 (6.10)	4.00…4.20 (0.157…0.165)	7.949…7.985 (0.3130…0.3144)
VPH-B1653	100.1 (3.90)	159.9 (6.30)		261.0 (10.28)	398.5 (15.73)	338.5 (13.33)	60.0 (2.40)	28.0 (1.103)	165.0 (6.50)	M10x1.5-6H Depth: 15 (0.59)	130.0 (5.12)	186.0 (7.30)		

(1) If ordering a VPH-A/B063*xx*-xJx4D*xx* motor with brake, add 30.6 mm (1.21 in.) to dimensions LE, L, and LB.
If ordering a VPH-A/B075*xx*-xJx4D*xx* motor with brake, add 27.1 mm (1.07 in.) to dimensions LE, L, and LB.
If ordering a VPH-A/B100*xx*-xJx4D*xx* motor with brake, add 32.1 mm (1.27 in.) to dimensions LE, L, and LB.
If ordering a VPH-A/B115*xx*-xJx4D*xx* motor with brake, add 35.8 mm (1.41 in.) to dimensions LE, L, and LB.
If ordering a VPH-A/B130*xx*-xJx4D*xx* motor with brake, add 37.9 mm (1.49 in.) to dimensions LE, L, and LB.
If ordering a VPH-B165*xx*-xJx4D*xx* motor with brake, add 43.2 mm (1.70 in.) to dimensions LE, L, and LB.

Motors are designed to metric dimensions. Inch dimensions are approximate conversions from millimeters. Dimensions without tolerances are for reference.

Kinetix VPS Stainless-steel Servo Motors



Kinetix VPS servo motors are specifically designed to meet the unique needs of sanitary processing environments. They also feature a digital feedback device that delivers real-time motor performance information back to the control system through a Kinetix 2090 single cable design between motor and drive that simplifies system installation.

Windings are matched to the ratings of Kinetix 5500 and Kinetix 5700 drive to optimize system sizing, lower system cost, and improve energy efficiency.

Kinetix VPS Servo Motor Features

Attribute	Value
Main characteristics	• Specifically designed for sanitary environments for use with high-pressure, highly-caustic washdown applications • Kinetix 2090 single cable technology • Hiperface DSL encoder protocol • Low rotor inertia
Features	• Smooth, passivated 300 series stainless-steel cylindrical exterior • Complies with NSF/ANSI Standard 169 • 400V-class windings • Shaft-end threaded hole • Cable extended 5 m (16.4 ft) from motor to protect connector • Standard IEC 72-1 mounting dimensions
Motor type	Brushless AC synchronous servo motors
Environmental rating	• IP66/IP67 with shaft seal (standard) and use of Rockwell Automation factory-delivered Kinetix 2090 cables • IP69K for 1200 psi motor washdown (1)
Certifications	Kinetix VPS rotary motors are UL Recognized components to applicable UL and CSA standards. CE marked for all applicable directives. Refer to rok.auto/certifications for the Product Certifications website.
Continuous stall torque	8.1 and 21.0 N•m (72 and 186 lb•in)
Peak stall torque	27.1 and 67.8 N•m (240 and 600 lb•in)
Rated speed	3000 rpm
Motor rated output	1.4 and 3.3 kW (1.9 and 4.4 Hp)
Compatible servo drives	• Kinetix 5700 • Kinetix 5500
Compatible servo cables	• 2090-CS*x*M1*xx*-*xx*AA/AF*xx* (TPE) cables • 2090-CS*x*M1*xx*-*xx*VA/LF*xx* (PVC and PUR) cables
Typical applications	• Meat and poultry • Food slicing and filling • Raw food handling • Processing • Life science • Consumer products

(1) The cable connectors are rated IP66/IP67 and are not designed to withstand high-pressure washdown or washdown with aggressive cleaning compounds. Position connectors away from direct exposure to cleaning processes, for example, within washdown-rated conduit or junction boxes.

Catalog Numbers - Kinetix VPS Servo Motors

Catalog numbers consist of various characters, each of which identifies a specific option for that component. Use the catalog numbering table chart below to understand the configuration of your motor. For questions regarding product availability, contact your Allen-Bradley distributor.

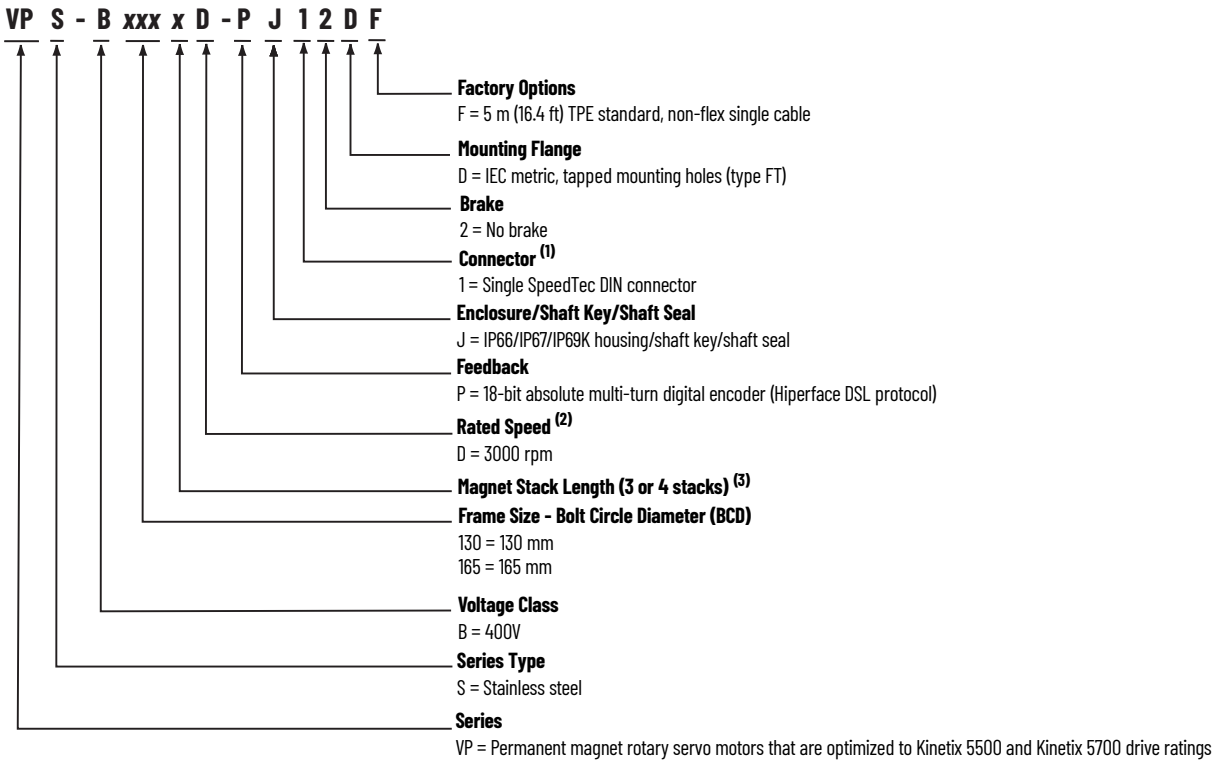

(1) The motor has 5 m (16.4 ft) Kinetix 2090 TPE cable extension with nickel-plated connector extensions.
(2) Rated speed hierarchy is only for comparative purposes. Use Motion Analyzer software to size and select motors for your application, and/or the torque/speed curves in the Kinetix 5500 Drive System Design Guide, publication KNX-RM009, and the Kinetix 5700 Drive System Design Guide, publication KNX-RM010.
(3) Not all combinations are available. Only the configurations for magnet stack length as listed in Kinetix VPS Servo Motor (400V-class) Performance Specifications on page 85 are available.

IMPORTANT The connectors are O-ring sealed, but not designed to withstand direct high-pressure washdown with aggressive cleaning compounds. The 5 m (16.4 ft) cables are provided so the connectors can be positioned in an area away from direct exposure to the cleaning process, such as within washdown-rated conduit or junction boxes.

Kinetix VPS Servo Motor High-resolution Encoders

Kinetix VPS servo motors are available with high-performance encoders with multi-turn (-P) high-resolution feedback:

- 18-bit resolution for 262,144 counts per revolution, multi-turn encoder (-P) provides absolute position feedback within 4096 turns
- Electromechanical design does not require a battery.

Kinetix 2090 Single Cable Technology

Motor connectivity reduced to a single connector and cable.

- Single cable eliminates hardware and wire terminations
- Purely digital two-wire communication integrated into the motor power cable
- Mating Kinetix 2090 single cables with:
  - TPE cable material for standard (non-flex) and continuous-flex cable
  - PVC cable material for standard (non-flex) and Halogen-free PUR continuous-flex cable
- Mating 2090-CSxM1D*x* cables are available in 1.0 m (3.2 ft) increments. Total cable length includes the 5m (16.4 ft) extension cable attached to the motor and varies depending on cable type and drive family.

Maximum Cable Length Including Cable Extension

Cable Cat. No.	Motor Cable Type	Kinetix 5500 Drives (1) m (ft)	Kinetix 5700 Drives (1) m (ft)
2090-CSxM1D*x*-*xxx*A*xx*	Single, standard (non-flex) cable	Cable length, max = 45 (148) Plus extension cable + 5 (16.4) Total cable length = 50 (164)	Cable length, max = 85 (279) Plus extension cable + 5 (16.4) Total cable length = 90 (295)
2090-CSxM1D*x*-*xxx*F*xx*	Single, continuous-flex cable	Cable length, max = 25 (82.0) Plus extension cable + 5 (16.4) Total cable length = 30 (98.4)	

(1) This table illustrates how the motor cable extension is included in the maximum cable length calculation. However, there are other variables to consider. See Kinetix 5500 Servo Drives User Manual, publication 2198-UM001, or Kinetix 5700 Servo Drives User Manual, publication 2198-UM002, for maximum cable length specifications specific to those drive families.

IMPORTANT Due to the unique characteristics of single cable technology, designed for and tested with Kinetix 5500 drives, Kinetix 5700 dual-axis inverters, and Kinetix VPS servo motors, building your own cables or using third-party cable is not an option.

On-Motor Cable Connector/Cable Compatibility

Kinetix VPS servo motors are equipped with SpeedTec DIN connectors.

SpeedTec DIN Connector

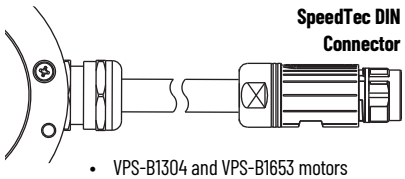

- VPS-B1304 and VPS-B1653 motors
- Receives only single cable plugs
- Attach cable plug with one-quarter turn
- 5 m (16.4 ft) cable extension

- 2090-CSxM1DF cables apply to Kinetix 5500 drives
- 2090-CSxM1DE cables apply to Kinetix 5700 drives
- 2090-CSxM1DG cables apply to Kinetix 5500 or Kinetix 5700 drives
- 2090-CSBM1P7 cables apply to ArmorKinetix DSD modules

SpeedTec DIN (M1) Single Cable Plug

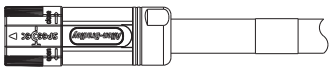

- 2090-CSBM1DF-*xx*A*xx* (standard, non-flex) power/feedback/brake cables
- 2090-CSWM1DF-*xx*A*xx* (standard, non-flex) power/feedback cables
- 2090-CSBM1DF-*xx*F*xx* (continuous-flex) power/feedback/brake cables
- 2090-CSBM1DE-*xxx*A*xx* (standard, non-flex) power/feedback/brake cables
- 2090-CSWM1DE-*xxx*A*xx* (standard, non-flex) power/feedback cables
- 2090-CSBM1DE-*xxx*F*xx* (continuous-flex) power/feedback/brake cables
- 2090-CSBM1DG-*xxx*A*xx* (standard, non-flex) power/feedback/brake cables
- 2090-CSWM1DG-*xxx*A*xx* (standard, non-flex) power/feedback cables
- 2090-CSBM1DG-*xxx*F*xx* (continuous-flex) power/feedback/brake cables

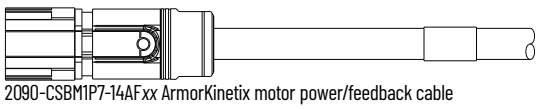

2090-CSBM1P7-14AF*xx* ArmorKinetix motor power/feedback cable

Product specifications for Kinetix VPS on-motor cables are identical to 2090-CSxM1*xx* (TPE) motor cable.For Kinetix 2090 single motor cable specifications, refer to Kinetix Rotary and Linear Motion Cable Specifications Technical Data, publication KNX-TD004.

Kinetix VPS Servo Motor Options

Kinetix VPS servo motors are available with these configurable options:

- The positive air pressure accessory kit (catalog number MPS-AIR-PURGE) is mounted to the rear cover of the motor to provide positive air pressure and further reduce the chance of contamination inside the motor. No special tool is required for installation and removal.
- Shaft seal kits (with slinger) are available for field replacement. Shaft seals are made of PTFE and include a lubricant to reduce wear.

IMPORTANT Shaft seals are subject to wear and require periodic inspection and replacement. Replacement is recommended every 3 months, not to exceed 12 months, depending on use.

Shaft Seal Kit Catalog Numbers

Motor Cat. No.	Shaft Seal Kit Cat. No.
VPS-B1304D	MPS-SST-A45B45
VPS-B1653D	MPS-SST-F165

Refer to the Kinetix VP Stainless-steel Servo Motor Installation Instructions, publication VPS-IN002, for more information.

Technical Specifications - Kinetix VPS Servo Motors

Kinetix VPS Servo Motor (400V-class) Performance Specifications

Motor Cat. No.	Rated Speed rpm	Maximum Speed rpm	Continuous Stall Torque N•m (lb•in)	Peak Stall Torque N•m (lb•in)	Motor Rated Output kW (Hp)	Rotor Inertia kg-m^2 (lb•in•s^2)	Motor Weight, approx kg (lb)
VPS-B1304D	3000	3000	8.1 (72.0)	27.1 (240)	1.4 (1.9)	0.00052 (0.0046)	13.4 (29.4)
VPS-B1653D	3000	3000	21.0 (186)	67.8 (600)	3.3 (4.4)	0.0023 (0.0203)	30.4 (66.8)

Kinetix VPS Servo Motor Load Force Ratings

Kinetix VPS servo motors are capable of operating with the maximum radial or maximum axial shaft loads listed in the following tables. Radial loads listed are applied in the middle of the shaft extension. The tables starting below represent an L_{10} bearing fatigue life of 20,000 hours. This 20,000-hour life does not account for possible application-specific life reduction that can occur due to bearing grease contamination from external sources. Maximum operating speed is limited by motor winding.

Load Forces on Shaft

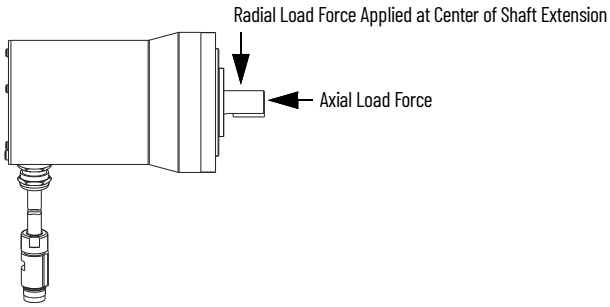

Radial Load Force Ratings (maximum)

Motor Cat. No.	Maximum Speed rpm	RPM			
		500 kgf (lbf)	**1000** kgf (lbf)	**2000** kgf (lbf)	**3000** kgf (lbf)
VPS-B1304D	3000	140 (308)	111 (244)	89 (196)	77 (169)
VPS-B1653D	3000	–	154 (338)	122 (268)	106 (234)

Axial Load Force Ratings (maximum radial load)

Motor Cat. No.	Maximum Speed rpm	RPM			
		500 kgf (lbf)	**1000** kgf (lbf)	**2000** kgf (lbf)	**3000** kgf (lbf)
VPS-B1304D	3000	49 (108)	36 (79)	27 (59)	22 (48)
VPS-B1653D	3000	–	52 (115)	39 (85)	32 (71)

Axial Load Force Ratings (zero radial load)

Motor Cat. No.	Maximum Speed rpm	RPM			
		500 kgf (lbf)	**1000** kgf (lbf)	**2000** kgf (lbf)	**3000** kgf (lbf)
VPS-B1304D	3000	69 (152)	51 (112)	38 (83)	31 (68)
VPS-B1653D	3000	–	68 (149)	50 (109)	42 (92)

Loads are measured in kilograms-force. Pound-force loads are approximate conversions from kilograms-force.

Dimensions - Kinetix VPS Servo Motors

VPS-B1304D and VPS-B1653D Motor Dimensions

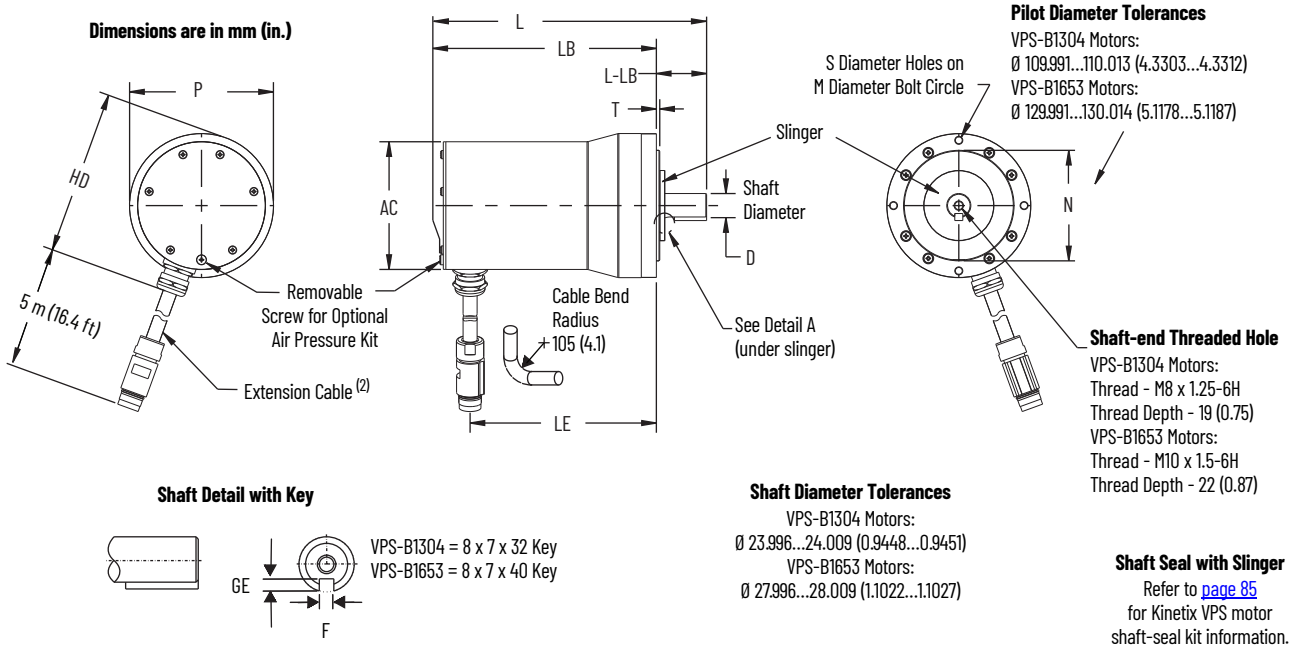

Shaft, Pilot, and Keyway Tolerances	VPS-B1304	VPS-B1653
Shaft Runout (T.I.R.)	0.04 (0.0016)	0.04 (0.0016)
Pilot Eccentricity (T.I.R.)	0.10 (0.0039)	0.10 (0.0039)
Max Face Runout (T.I.R.)	0.10 (0.0039)	0.10 (0.0039)
Keyway Depth (GE)	4.00...4.20 (0.158...0.165)	4.00...4.20 (0.158...0.165)
Keyway Width (F)	7.96...8.00 (0.314...0.315)	7.96...8.00 (0.314...0.315)

Motor Cat. No.	HD mm (in.)	AC mm (in.)	T mm (in.)	LE mm (in.)	L mm (in.)	LB mm (in.)	L-LB (1) mm (in.)	D mm (in.)	M mm (in.)	S mm (in.)	N mm (in.)	P mm (in.)	GE mm (in.)	F mm (in.)
VPS-B1304	164.0 (6.40)	127.1 (5.00)	3.38 (0.133)	185.0 (7.30)	266.0 (10.47)	216.0 (8.50)	50.0 (1.97)	24.0 (0.945)	130.0 (5.118)	M8x1.25-6H Depth: 9.0 (0.35)	110.0 (4.33)	143.2 (5.64)	4.0 (0.158)	8.0 (0.315)
VPS-B1653	198.0 (7.80)	168.3 (6.63)	3.38 (0.13)	302.0 (11.90)	396.4 (15.60)	336.4 (13.24)	60.0 (2.36)	28.0 (1.10)	165.0 (6.49)	M10x1.50-6H Depth: 11.0 (0.43)	130.0 (5.12)	181.0 (7.13)	4.0 (0.158)	8.0 (0.315)

(1) Tolerance for this dimension is ±0.7 mm (±0.03 in.).
(2) Specifications for the 5 m (16.4 ft) Kinetix 2090 cable extensions are identical to those of the 2090-CSxM1*xx*-xxAA*xx* single motor cables. Refer to Kinetix Rotary and Linear Motion Cable Specifications Technical Data, publication KNX-TD004, for cable specifications.

Motors are designed to metric dimensions. Inch dimensions are approximate conversions from millimeters. Dimensions without tolerances are for reference.

Kinetix MPL Low-inertia Servo Motors

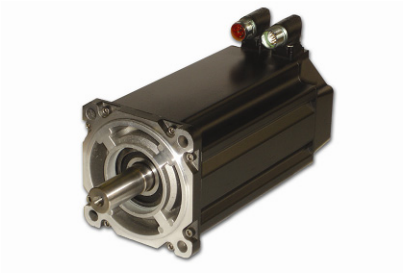

Kinetix MPL servo motors have a compact design to reduce motor size while delivering significantly higher torque. These compact and highly-dynamic brushless servo motors are designed by Allen-Bradley to meet the demanding requirements of high-performance motion systems.

Kinetix MPL Servo Motor Features

Attribute	Value
Main characteristics	• High torque to size ratio • Smart Motor Technology • Hiperface (Stegmann) encoder protocol • Low rotor inertia
Features	• 200V and 400V-class windings • Single-turn and multi-turn absolute feedback • Incremental and resolver feedback options • High-energy rare-earth magnets • Shaft-end threaded hole • DIN connectors, rotates 180° • Standard IEC 72-1 mounting dimensions
Motor type	Brushless AC synchronous servo motors
Environmental rating	• IP50 minimum, without shaft seal (standard) • IP66 with optional shaft seal and use of Rockwell Automation factory-delivered Kinetix 2090 cables
Certifications	Kinetix MPL rotary motors are UL Recognized components to applicable UL and CSA standards. CE marked for all applicable directives. Refer to rok.auto/certifications for the Product Certifications website.
Continuous stall torque	0.26...163 N•m (2.3...1440 lb•in)
Peak stall torque	0.74...278 N•m (6.6...2460 lb•in)
Rated speed	Up to 8000 rpm
Motor rated output	0.16...18.6 kW
Compatible servo drives	• Kinetix 5500 (1) • Kinetix 5700 (2) • Kinetix 6200/6500 • Kinetix 6000 • Kinetix 300/350 • Kinetix 2000 • Kinetix 7000 • ArmorKinetix DSD
Compatible servo cables	2090-CxxM7*xx* cables • 2090-CSBM1P7-14AF*xx* (PUR) cables • 2090-CFBM7S7-CDAF*xx* (PUR) cables
Typical applications	• Packaging • Converting • Material handling • Electronic assembly • Automotive

(1) Requires the 2198-H2DCK (series B or later) Hiperface-to-DSL feedback converter kit.
(2) Requires the 2198-K57CK-D15M universal feedback connector kit.

Catalog Numbers - Kinetix MPL Servo Motors

Catalog numbers consist of various characters, each of which identifies a specific option for that component. Use the catalog numbering table chart below to understand the configuration of your motor. For questions regarding product availability, contact your Allen-Bradley distributor.

MP L - x xx xx x - x x 7 x A A

Factory Options
A = Standard

Mounting Flange
A = IEC metric, free mounting holes (type FF)

Brake
2 = No brake
4 = 24V DC holding brake

Connectors
7 = Circular (SpeedTec) DIN connector, right angle, 180° rotatable (7)

Enclosure/Shaft Key/Shaft Seal
J = Shaft key/No shaft seal
K = No shaft key/No shaft seal (3)

Feedback
V = 128 sin/cos, absolute multi-turn encoder (Hiperface protocol) (1)
M = 1024 sin/cos, absolute multi-turn encoder (Hiperface protocol) (2)
E = 128 sin/cos, absolute single-turn encoder (Hiperface protocol) (1)
S = 1024 sin/cos, absolute single-turn encoder (Hiperface protocol) (2)
H = 2000 lines/revolution, incremental encoder (4)
R = Resolver (5)

Rated Speed (6)

B = 1000 rpm	H = 3500 rpm	T = 6000 rpm
C = 1500 rpm	J = 3750 rpm	U = 7000 rpm
D = 2000 rpm	K = 4000 rpm	V = 8000 rpm
F = 3000 rpm	P = 5000 rpm	

Magnet Stack Length (6)

10 = 25.4 mm (1.0 in.)	50 = 127.0 mm (5.0 in.)
20 = 50.8 mm (2.0 in.)	60 = 152.4 mm (6.0 in.)
30 = 76.2 mm (3.0 in.)	70 = 177.8 mm (7.0 in.)
40 = 101.6 mm (4.0 in.)	80 = 203.2 mm (8.0 in.)

Frame Size

15 = 63 mm	5 = 165 mm
2 = 75 mm	6 = 215 mm
3 = 100 mm	8 = 265 mm
4 = 115 mm	9 = 300 mm
45 = 130 mm	

Voltage Class
A = 200V
B = 400V

Series Type
L = Low inertia

Series
MP = Premium permanent magnet rotary servo motor

(1) Applies to MPL-A/B15*xx* and MPL-A/B2*xx* motors.
(2) Applies to MPL-A/B3*xx*, MPL-A/B4*xx*, MPL-A/B45*xx*, MPL-A/B5*xx*, MPL-B6*xx*, MPL-B8*xx*, and MPL-B9*xx* motors.
(3) Requires longer lead times. Applies to only limited frame sizes.
(4) Applies to MPL-A/B15*xxx*-H, MPL-A/B2*xxx*-H, MPL-A/B3*xxx*-H, MPL-A/B4*xxx*-H, MPL-A/B45*xxx*-H motors.
(5) Applies to MPL-B3*xxx*-R, MPL-B4*xxx*-R, and MPL-B45*xxx*-R motors.
(6) Not all combinations are available. Only the configurations for rated speed and magnet stack length, as listed in Kinetix MPL Servo Motor (200V-class) Performance Specifications on page 92 and Kinetix MPL Servo Motor (400V-class) Performance Specifications on page 93, are available. Use Motion Analyzer software to size and select motors for your application.
(7) Applies to all Kinetix MPL motors with M23 and M40 cable connectors. M58 connectors (MPL-B8*xxx* and MPL-B9*xxx* motors) must be physically removed and repositioned in 90° increments.

Kinetix MPL Servo Motor High-resolution Encoders

Kinetix MPL servo motors are available with high performance encoders with a choice of single-turn (-E, -S) or multi-turn (-V, -M) high resolution feedback:

- 1024 sin/cos cycles per revolution for up to 21-bit resolution (2,097,152 counts per revolution) -M and -S (MPL-A/B3*xx*, MPL-A/B4*xx*, MPL-A/B45*xx*, MPL-A/B5*xx*, MPL-B6*xx*, MPL-B8*xx*, and MPL-B9*xx* motors).
- 128 sin/cos cycles per revolution for up to 18-bit resolution (262,144 counts per revolution) -E and -V (MPL-A/B15*xx* and MPL-A/B2*xx* motors).
- Single-turn encoder provides high-resolution absolute position feedback within one turn.
- Multi-turn encoder provides high-resolution absolute position feedback within 4096 turns. The electromechanical design does not require a battery.

Motor Connector/Cable Compatibility

Kinetix MPL servo motors are equipped with SpeedTec DIN connectors.

SpeedTec DIN Connectors

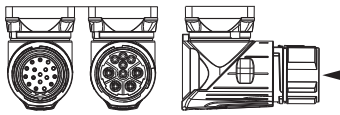

- MPL-A/B15*xxx*...MPL-B9*xxx* motors
- Receives M4 and M7 cable plugs (O-ring required for M4)
- Attach M7 cable plug with one-quarter turn

SpeedTec DIN (M7) Cable Plug

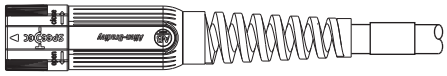

- 2090-CFBM7DF-CEAA*xx* (standard, non-flex) flying-lead, feedback cables
- 2090-CFBM7DD-CEAA*xx* (standard, non-flex) drive-end connector, feedback cables
- 2090-CFBM7DF-CEAF*xx* (continuous-flex) flying-lead, feedback cables
- 2090-CFBM7DD-CEAF*xx* (continuous-flex) drive-end connector, feedback cables
- 2090-CFBM7DF-CDAF*xx* (continuous-flex) flying-lead, feedback cables

- 2090-CPWM7DF-*xx*AA*xx* (standard, non-flex) power-only cables
- 2090-CPBM7DF-*xx*AA*xx* (standard, non-flex) power/brake cables
- 2090-CPWM7DF-*xx*AF*xx* (continuous-flex) power-only cables
- 2090-CPBM7DF-*xx*AF*xx* (continuous-flex) power/brake cables



2090-CSBM1P7-14AF*xx* ArmorKinetix motor power/feedback cable

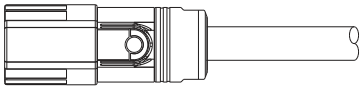

2090-CFBM7S7-CDAF*xx* ArmorKinetix feedback cable

For information on transitioning your Kinetix MPL servo motor installation from bayonet cables to circular DIN cables, refer to Kinetix Rotary and Linear Motion Cable Specifications Technical Data, publication KNX-TD004.

Kinetix MPL Servo Motor Options

Kinetix MPL servo motors are available with these options:

- 24V DC holding brake.
- Optional keyless shaft available in limited frame sizes with extended lead times (MPL-A/B3*xx*, MPL-A/B4*xx*, MPL-A/B45*xx*, and MPL-A/B5*xx* motors).
- Shaft seal kits are available, as are replacement kits for field installation. Shaft seals are made of nitrile and kits include a lubricant to reduce wear.

IMPORTANT Shaft seals are subject to wear and require periodic inspection and replacement. Replacement is recommended every 3 months, not to exceed 12 months, depending on use.

Shaft Seal Kit Catalog Numbers

Motor Cat. No.	Shaft Seal Kit Cat. No.
MPL-A15*xx* and MPL-B15*xx*	MPL-SSN-F63F75
MPL-A2*xx* and MPL-B2*xx*	
MPL-A3*xx* and MPL-B3*xx*	MPL-SSN-A3B3
MPL-A4*xx* and MPL-B4*xx*	MPL-SSN-A4B4
MPL-A45*xx* and MPL-B45*xx*	MPL-SSN-A5B5
MPL-A520 and MPL-B520 MPL-A540 and MPL-B540 MPL-A560 and MPL-B560	MPL-SSN-F165
MPL-B580	MPL-SSN-F165-32MM
MPL-B6*xx*	MPL-SSN-A6B6
MPL-B8*xx*	MPL-SSN-A8B8
MPL-B9*xx*	MPL-SSN-A9B9

Technical Specifications - Kinetix MPL Servo Motors

Kinetix MPL Servo Motor (200V-class) Performance Specifications

Motor Cat. No.	Rated Speed rpm	Maximum Speed rpm	Continuous Stall Torque N•m (lb•in)	Peak Stall Torque N•m (lb•in)	Motor Rated Output kW	Rotor Inertia (1) kg-m^2 (lb•in•s^2)	Motor Weight, approx (1) kg (lb)
MPL-A1510V	8000	8000	0.26 (2.3)	0.77 (6.8)	0.16	0.0000074 (0.000065)	1.0 (2.2)
MPL-A1520U	7000	7000	0.49 (4.3)	1.58 (14)	0.27	0.000013 (0.00012)	1.2 (2.6)
MPL-A1530U	7000	7000	0.90 (8.0)	2.80 (25)	0.39	0.000023 (0.00020)	1.6 (3.4)
MPL-A210V	8000	8000	0.55 (4.9)	1.50 (13.5)	0.37	0.000015 (0.00013)	1.4 (3.1)
MPL-A220T	6000	6000	1.61 (14.2)	4.74 (42)	0.62	0.000039 (0.00035)	2.0 (4.4)
MPL-A230P	5000	5000	2.10 (18.6)	8.20 (73)	0.86	0.000063 (0.00056)	2.6 (5.7)
MPL-A310P	4750	5000	1.58 (14)	3.61 (32)	0.73	0.000044 (0.00039)	2.7 (5.8)
MPL-A310F	3000	3000	1.58 (14)	3.61 (32)	0.46		
MPL-A320P	4750	5000	3.05 (27)	7.91 (70)	1.3	0.000078 (0.00069)	3.7 (8.0)
MPL-A320H	3350	3500	3.05 (27)	7.91 (70)	1.0		
MPL-A330P	5000	5000	4.18 (37)	11.1 (98)	1.8	0.00012 (0.0010)	4.6 (10)
MPL-A420P	5000	5000	4.74 (42)	10.2 (90)	2.0	0.00026 (0.0023)	4.3 (9.4)
MPL-A430P	5000	5000	5.99 (53)	19.8 (175)	2.2	0.00038 (0.0033)	5.5 (12)
MPL-A430H	3500	3500	6.21 (55)	19.8 (175)	1.8		
MPL-A4530K	4000	4000	8.13 (72)	20.3 (180)	2.5	0.00040 (0.0036)	7.3 (16)
MPL-A4530F	2800	2800	8.36 (74)	20.3 (180)	1.9		
MPL-A4540C	1500	1500	10.2 (90)	27.1 (240)	1.5	0.00052 (0.0046)	8.6 (19)
MPL-A4540F	3000	3000	10.2 (90)	27.1 (240)	2.6		
MPL-A4560F	3000	3000	14.1 (125)	34.4 (305)	3.0	0.00078 (0.0067)	11.82 (26)
MPL-A520K	3500	4000	10.7 (95)	24.3 (215)	3.5	0.000783 (0.0069)	9.8 (21.5)
MPL-A540K	4000	4000	19.4 (172)	48.6 (430)	5.5	0.00147 (0.013)	15.0 (33)
MPL-A560F	3000	3000	26.8 (237)	61.0 (540)	5.3	0.00213 (0.019)	20.2 (44.5)
MPL-A660D	3000	2250	48.0 (425)	113.0 (1000)	6.15	0.00628 (0.0555)	35.0 (77)

(1) Refer to on page 94 for brake rotor inertia and brake motor weight.

Kinetix MPL Servo Motor (400V-class) Performance Specifications

Motor Cat. No.	Rated Speed rpm	Maximum Speed rpm	Continuous Stall Torque N•m (lb•in)	Peak Stall Torque N•m (lb•in)	Motor Rated Output kW	Rotor Inertia (1) kg-m^2 (lb•in•s^2)	Motor Weight, approx (1) kg (lb)
MPL-B1510V	8000	8000	0.26 (2.3)	0.77 (6.8)	0.16	0.0000074 (0.000065)	1.0 (2.2)
MPL-B1520U	7000	7000	0.49 (4.3)	1.58 (14)	0.27	0.000013 (0.00012)	1.2 (2.6)
MPL-B1530U	7000	7000	0.90 (8.0)	2.80 (25)	0.39	0.000023 (0.00020)	1.6 (3.4)
MPL-B210V	8000	8000	0.55 (4.9)	1.50 (13.5)	0.37	0.000015 (0.00013)	1.4 (3.1)
MPL-B220T	6000	6000	1.61 (14.2)	4.74 (42)	0.62	0.000039 (0.00035)	2.0 (4.4)
MPL-B230P	5000	5000	2.10 (18.6)	8.20 (73)	0.86	0.000063 (0.00056)	2.6 (5.7)
MPL-B310P	5000	5000	1.58 (14)	3.61 (32)	0.77	0.000044 (0.00039) (2)	2.7 (5.8)
MPL-B320P	5000	5000	3.05 (27)	7.91 (70)	1.5	0.000078 (0.00069) (2)	3.7 (8.0)
MPL-B330P	5000	5000	4.18 (37)	11.1 (98)	1.8	0.00012 (0.0010) (2)	4.6 (10)
MPL-B420P	5000	5000	4.74 (42)	13.5 (120)	1.9	0.00026 (0.0023) (2)	4.3 (9.4)
MPL-B430P	5000	5000	6.55 (58)	19.8 (175)	2.2	0.00038 (0.0033) (2)	5.5 (12)
MPL-B4530F	3000	3000	8.25 (73)	20.3 (180)	2.1	0.00040 (0.0036) (2)	7.3 (16)
MPL-B4530K	4000	4000	8.25 (73)	20.3 (180)	2.6		
MPL-B4540F	3000	3000	10.2 (90)	27.1 (240)	2.6	0.00052 (0.0046) (2)	8.6 (19)
MPL-B4560F	3000	3000	14.1 (125)	34.4 (305)	3.2	0.00078 (0.0067) (2)	11.82 (26)
MPL-B520K	3500	4000	10.7 (95)	23.2 (205)	3.5	0.000783 (0.0069)	9.8 (21.5)
MPL-B540D	2000	2000	19.4 (172)	41.0 (362)	3.4	0.00147 (0.013)	15 (33)
MPL-B540K	4000	4000	19.4 (172)	48.6 (430)	5.4	0.00147 (0.013)	
MPL-B560F	3000	3000	26.8 (237)	67.8 (600)	5.5	0.00213 (0.019)	20.2 (44.5)
MPL-B580F	3000	3000	34.0 (301)	87.0 (770)	7.1	0.00289 (0.023)	25.4 (56)
MPL-B580J	3800	3800	34.0 (301)	81.0 (716)	7.9		
MPL-B640F	2000	3000	36.7 (325)	72.3 (640)	6.11	0.004 (0.0354)	26.8 (59)
MPL-B660F	2000	3000	48.0 (425)	101.1 (895)	6.15	0.0058 (0.051)	35.0 (77)
MPL-B680D	2000	2000	62.8 (556)	154.2 (1365)	9.3	0.00775 (0.0685)	40.4 (89)
MPL-B680F	2000	3000	60.0 (531)	108.5 (960)	7.5		
MPL-B680H	2000	3500	60.0 (531)	146.9 (1300)	7.5		
MPL-B860D	2000	2000	83.0 (735)	152.5 (1350)	12.5	0.0169 (0.150)	57.3 (126)
MPL-B880C	1500	1500	110.0 (973)	203 (1800)	12.6	0.0224 (0.198)	72.7 (160)
MPL-B880D	2000	2000	110.0 (973)	147 (1300)	12.6		
MPL-B960B	1200	1200	130.0 (1150)	231 (2050)	12.7	0.0273 (0.242)	76.0 (167)
MPL-B960C	1500	1500	124.3 (1100)	226 (2000)	14.8		
MPL-B960D	2000	2000	124.3 (1100)	226 (2000)	15.0		
MPL-B980B	1000	1000	162.7 (1440)	278 (2460)	15.2	0.0354 (0.313)	94.5 (208)
MPL-B980C	1500	1500	158.2 (1400)	271 (2400)	16.8		
MPL-B980D	2000	2000	158.2 (1400)	260 (2300)	18.6		
MPL-B980E	1500	2750	141.0 (1250)	237 (2100)	13.0		

(1) Refer to on page 94 for brake rotor inertia and brake motor weight.
(2) Rotor inertia can vary slightly depending on feedback.

Kinetix MPL Servo Motor Brake Specifications

Motor Cat. No.	Backlash, max (brake engaged) arc minutes	Holding Torque N•m (lb•in)	Coil Current at 24V DC A	Brake Response Time			Brake Rotor Inertia kg-m^2 (lb•in•s^2)	Brake Motor Weight, approx kg (lb)
				Release ms	Engage [1]			
					MOV ms	Diode ms		
MPL-A/B1510V	0	0.9 (8.0)	0.43…0.53	23	9	18	0.0000099 (0.000088)	1.2 (2.6)
MPL-A/B1520U							0.000015 (0.00013)	1.4 (3.1)
MPL-A/B1530U							0.000026 (0.00023)	1.8 (3.9)
MPL-A/B210V		4.5 (40)	0.46…0.56	58	20	42	0.000033 (0.00029)	1.8 (4.0)
MPL-A/B220T							0.000057 (0.00050)	2.4 (5.4)
MPL-A/B230P							0.000082 (0.00073)	3.0 (6.7)
MPL-A/B310	45	4.18 (37)	0.45…0.55	50	20	110	0.000057 (0.00050)	3.7 (8)
MPL-A/B320							0.000092 (0.00081)	4.6 (10)
MPL-A/B330							0.00013 (0.0011)	5.6 (12.4)
MPL-A/B420	37	10.2 (90)	0.576…0.704	110	25	160	0.00030 (0.0027)	6.0 (13.2)
MPL-A/B430							0.00042 (0.0038)	7.3 (16)
MPL-A/B4530							0.00044 (0.0039)	9.1 (20)
MPL-A/B4540							0.00056 (0.0050)	11.0 (24)
MPL-A/B4560							0.00084 (0.0072)	15.1 (33.2)
MPL-A/B520	25	28.3 (250)	1.05…1.28	70	50	250	0.000897 (0.0079)	12.38 (27.25)
MPL-A/B540							0.00157 (0.0139)	17.6 (38.75)
MPL-A/B560							0.00227 (0.020)	22.8 (50.1)
MPL-B580							0.0030 (0.026)	29.0 (63.8)
MPL-B640	25	70.0 (619)	1.91…2.19	200	120	900	0.00438 (0.03863)	37.27 (82.0)
MPL-A/B660							0.00628 (0.0555)	42.95 (94.5)
MPL-B680							0.0079 (0.0698)	50.8 (112.0)
MPL-B860		106.0 (938)	2.05…2.50	250	200	1000	0.0177 (0.1570)	72.7 (160)
MPL-B880							0.0232 (0.205)	87.7 (193)
MPL-B960		153.0 (1350)	3.85…4.70	300	200	1200	0.0290 (0.256)	89.5 (197)
MPL-B980							0.0378 (0.334)	116.5 (256)

(1) By using an arc suppression device in external control circuit.

Kinetix MPL Servo Motor Load Force Ratings

Kinetix MPL servo motors are capable of operating with the maximum radial or maximum axial shaft loads listed in the following tables. Radial loads listed are applied in the middle of the shaft extension. The tables starting below represent an L_{10} bearing fatigue life of 20,000 hours. This 20,000-hour life does not account for possible application-specific life reduction that can occur due to bearing grease contamination from external sources. Maximum operating speed is limited by motor winding.

Load Forces on Shaft

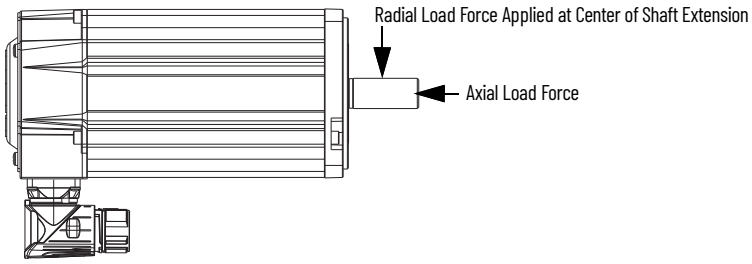

Radial Load Force Ratings

Motor Cat. No.	500 rpm kg (lb)	1000 rpm kg (lb)	2000 rpm kg (lb)	3000 rpm kg (lb)	3500 rpm kg (lb)	4000 rpm kg (lb)	5000 rpm kg (lb)	6000 rpm kg (lb)	7000 rpm kg (lb)	8000 rpm kg (lb)
MPL-A/B1510	–	24 (52)	19 (41)	–	–	15 (33)	–	–	–	12 (26)
MPL-A/B1520	–	25 (56)	20 (45)	–	–	16 (36)	–	–	14 (30)	–
MPL-A/B1530	–	28 (62)	22 (49)	–	–	18 (39)	–	–	15 (33)	–
MPL-A/B210	–	24 (52)	19 (41)	–	–	15 (33)	–	–	–	12 (26)
MPL-A/B220	–	27 (59)	21 (47)	–	18 (39)	–	–	15 (33)	–	–
MPL-A/B230	–	29 (64)	23 (51)	–	19 (42)	–	17 (37)	–	–	–
MPL-A/B310	78 (172)	62 (137)	49 (108)	–	40 (88)	–	36 (79)	–	–	–
MPL-A/B320	87 (192)	69 (152)	55 (121)	–	45 (99)	–	40 (88)	–	–	–
MPL-A/B330	–	74 (163)	59 (130)	–	49 (108)	–	43 (95)	–	–	–
MPL-A/B420	–	78 (172)	62 (137)	–	51 (112)	–	45 (99)	–	–	–
MPL-A/B430	106 (234)	84 (185)	67 (148)	–	55 (121)	–	49 (108)	–	–	–
MPL-A/B4530	133 (293)	105 (232)	84 (185)	73 (161)	–	66 (146)	–	–	–	–
MPL-A4540C	140 ((309)	112 (245)	96 (211)	–	–	–	–	–	–	–
MPL-A/B4540	140 (309)	111 (245)	89 (196)	77 (170)	–	–	–	–	–	–
MPL-A/B4560	–	151 (332)	119 (263)	95 (209)	–	–	–	–	–	–
MPL-A/B520	–	127 (280)	100 (222)	88 (194)	–	80 (176)	–	–	–	–
MPL-A/B540	–	143 (316)	114 (251)	99 (219)	–	90 (199)	–	–	–	–
MPL-A/B560	–	153 (338)	121 (268)	106 (234)	–	–	–	–	–	–
MPL-B580	–	153 (338)	121 (268)	106 (234)	–	–	–	–	–	–
MPL-B640	253 (557)	200 (442)	159 (351)	139 (307)	–	–	–	–	–	–
MPL-A/B660	275 (607)	219 (482)	173 (382)	151 (334)	–	–	–	–	–	–
MPL-B680	291 (641)	230 (508)	183 (404)	160 (353)	–	–	–	–	–	–
MPL-B860	347 (764)	276 (607)	219 (481)	–	–	–	–	–	–	–
MPL-B880	368 (810)	292 (643)	231 (510)	–	–	–	–	–	–	–
MPL-B960	466 (1028)	370 (816)	323 (713)	–	–	–	–	–	–	–
MPL-B980	494 (1089)	392 (864)	352 (775)	–	–	–	–	–	–	–

Axial Load Force Ratings (maximum radial load)

Motor Cat. No.	500 rpm kg (lb)	1000 rpm kg (lb)	2000 rpm kg (lb)	3000 rpm kg (lb)	3500 rpm kg (lb)	4000 rpm kg (lb)	5000 rpm kg (lb)	6000 rpm kg (lb)	7000 rpm kg (lb)	8000 rpm kg (lb)
MPL-A/B1510	–	15 (33)	10 (22)	–	–	7 (15)	–	–	–	5 (11)
MPL-A/B1520	–	14 (31)	10 (22)	–	–	6 (13)	–	–	4 (9)	–
MPL-A/B1530	–	13 (29)	9 (20)	–	–	6 (13)	–	–	4 (8)	–
MPL-A/B210	–	15 (33)	10 (22)	–	–	7 (15)	–	–	–	5 (11)
MPL-A/B220	–	14 (30)	9 (20)	–	7 (15)	–	–	5 (11)	–	–
MPL-A/B230	–	13 (28)	9 (19)	–	6 (13)	–	5 (11)	–	–	–
MPL-A/B310	30 (66)	23 (51)	16 (35)	–	13 (29)	–	11 (24)	–	–	–
MPL-A/B320	34 (75)	25 (55)	19 (42)	–	15 (33)	–	13 (29)	–	–	–
MPL-A/B330	–	27 (60)	20 (44)	–	16 (35)	–	13 (29)	–	–	–
MPL-A/B420	–	36 (79)	27 (60)	–	21 (46)	–	18 (40)	–	–	–
MPL-A/B430	52 (115)	39 (86)	29 (64)	–	22 (49)	–	19 (42)	–	–	–
MPL-A/B4530	45 (99)	34 (75)	25 (55)	21 (46)	–	19 (42)	–	–	–	–
MPL-A4540C	31 (68)	37 (81)	49 (108)	–	–	–	–	–	–	–
MPL-A/B4540	49 (108)	36 (79)	27 (60)	22 (49)	–	–	–	–	–	–
MPL-A/B4560	–	53 (117)	40 (88)	30 (65)	–	–	–	–	–	–
MPL-A/B520	–	42 (94)	30 (68)	26 (58)	–	22 (50)	–	–	–	–
MPL-A/B540	–	48 (107)	35 (79)	30 (66)	–	26 (58)	–	–	–	–
MPL-A/B560	–	52 (115)	43 (95)	32 (71)	–	–	–	–	–	–
MPL-B580	–	52 (115)	43 (95)	32 (71)	–	–	–	–	–	–
MPL-B640	89 (197)	66 (146)	48 (107)	41 (90)	–	–	–	–	–	–
MPL-A/B660	98 (217)	72 (159)	53 (118)	45 (99)	–	–	–	–	–	–
MPL-B680	104 (230)	77 (169)	34 (125)	47 (104)	–	–	–	–	–	–
MPL-B860	145 (320)	107 (237)	79 (175)	–	–	–	–	–	–	–
MPL-B880	153 (338)	113 (250)	84 (185)	–	–	–	–	–	–	–
MPL-B960	142 (314)	105 (232)	88 (194)	–	–	–	–	–	–	–
MPL-B980	153 (338)	113 (249)	94 (207)	–	–	–	–	–	–	–

Axial Load Force Ratings (zero radial load)

Motor Cat. No.	500 rpm kg (lb)	1000 rpm kg (lb)	2000 rpm kg (lb)	3000 rpm kg (lb)	3500 rpm kg (lb)	4000 rpm kg (lb)	5000 rpm kg (lb)	6000 rpm kg (lb)	7000 rpm kg (lb)	8000 rpm kg (lb)
MPL-A/B1510	–	24 (53)	17 (37)	–	–	12 (26)	–	–	–	8 (18)
MPL-A/B1520	–	24 (53)	17 (37)	–	–	12 (26)	–	–	9 (19)	–
MPL-A/B1530	–	24 (53)	17 (37)	–	–	12 (26)	–	–	9 (19)	–
MPL-A/B210	–	24 (53)	17 (37)	–	–	12 (26)	–	–	–	8 (18)
MPL-A/B220	–	24 (53)	17 (37)	–	13 (28)	–	–	10 (22)	–	–
MPL-A/B230	–	24 (53)	17 (37)	–	13 (28)	–	10 (22)	–	–	–
MPL-A/B310	49 (108)	36 (79)	27 (60)	–	21 (46)	–	18 (40)	–	–	–
MPL-A/B320	49 (108)	36 (79)	27 (60)	–	21 (46)	–	18 (40)	–	–	–
MPL-A/B330	–	36 (79)	27 (60)	–	21 (46)	–	18 (40)	–	–	–
MPL-A/B420	–	51 (112)	38 (84)	–	30 (66)	–	25 (55)	–	–	–
MPL-A/B430	69 (152)	51 (112)	38 (84)	–	30 (66)	–	25 (55)	–	–	–
MPL-A/B4530	69 (152)	51 (112)	38 (84)	31 (68)	–	28 (62)	–	–	–	–
MPL-A4540C	68 (150)	51 (112)	43 (95)	–	–	–	–	–	–	–
MPL-A/B4540	69 (152)	51 (112)	38 (84)	31 (68)	–	–	–	–	–	–
MPL-A/B4560	–	69 (152)	51 (112)	38 (84)	–	–	–	–	–	–
MPL-A/B520	–	67 (149)	49 (109)	41 (92)	–	36 (81)	–	–	–	–
MPL-A/B540	–	67 (149)	49 (109)	41 (92)	–	36 (81)	–	–	–	–
MPL-A/B560	–	67 (149)	49 (109)	41 (92)	–	–	–	–	–	–
MPL-B580	–	67 (149)	49 (109)	41 (92)	–	–	–	–	–	–
MPL-B640	136 (300)	99 (219)	74 (163)	62 (137)	–	–	–	–	–	–
MPL-A/B660	136 (300)	99 (219)	74 (163)	62 (137)	–	–	–	–	–	–
MPL-B680	136 (300)	99 (219)	74 (163)	62 (137)	–	–	–	–	–	–
MPL-B860	201 (443)	147 (323)	110 (242)	–	–	–	–	–	–	–
MPL-B880	201 (443)	147 (323)	110 (242)	–	–	–	–	–	–	–
MPL-B960	215 (473)	159 (350)	133 (293)	–	–	–	–	–	–	–
MPL-B980	215 (473)	159 (350)	133 (293)	–	–	–	–	–	–	–

Dimensions - Kinetix MPL Servo Motors

MPL-A/B15*xx* and MPL-A/B2*xx* Motor Dimensions (SpeedTec DIN connectors)

Dimensions are in mm (in.)

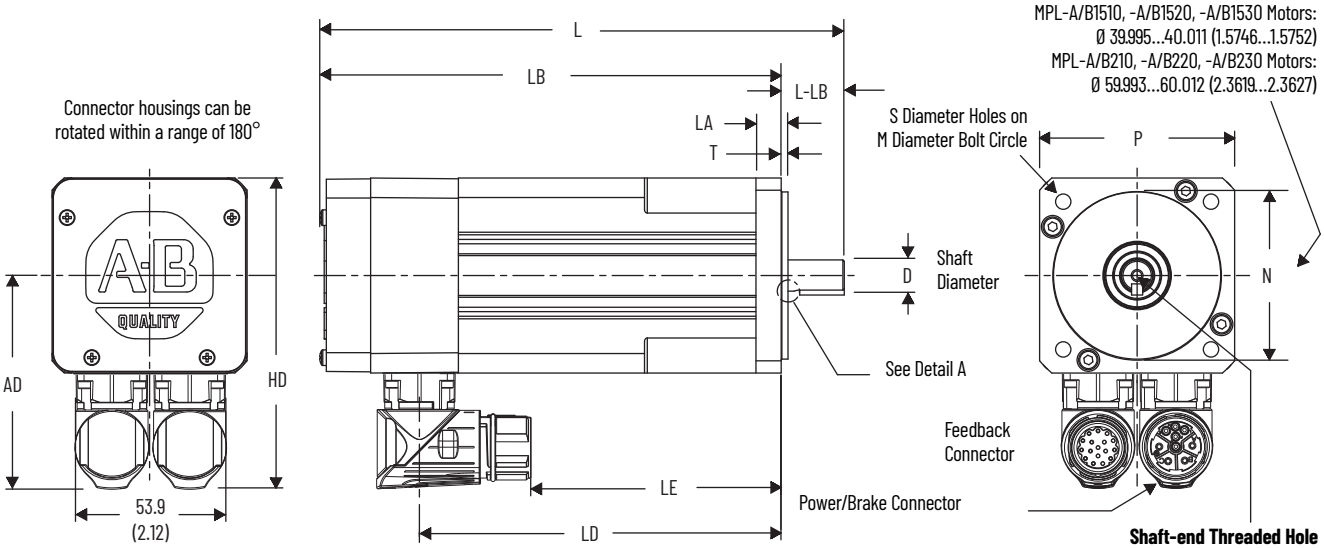

Pilot Diameter Tolerances
MPL-A/B1510, -A/B1520, -A/B1530 Motors:
Ø 39.995...40.011 (1.5746...1.5752)
MPL-A/B210, -A/B220, -A/B230 Motors:
Ø 59.993...60.012 (2.3619...2.3627)

Shaft-end Threaded Hole
MPL-A/B1510, -A/B1520, -A/B1530 Motors:
Thread - M3 x 0.5-6H
Thread Depth - 9.0 (0.35)
MPL-A/B210, -A/B220, -A/B230 Motors:
Thread - M4 x 0.7-6H
Thread Depth - 10.0 (0.39)

Detail A

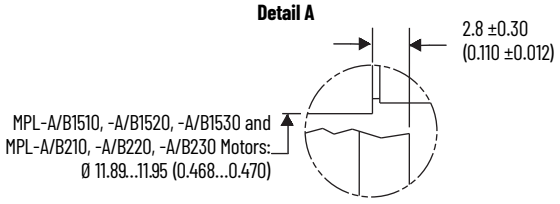

Shaft Diameter Tolerances
MPL-A/B1510, -A/B1520, -A/B1530 Motors:
Ø 8.998...9.007 (0.3543...0.3546)
MPL-A/B210, -A/B220, -A/B230 Motors:
Ø 10.997...11.008 (0.4330...0.4334)

Optional Shaft Seal
Refer to page 91 for Kinetix MPL motor shaft-seal kit information.

Shaft Detail with Key

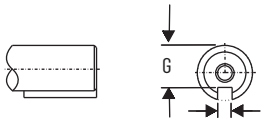

MPL-A/B1510, -A/B1520, -A/B1530 = 3 x 3 x 14 Key
MPL-A/B210, -A/B220, -A/B230 = 4 x 4 x 16 Key

Shaft, Pilot, and Keyway Tolerances	MPL-A/B15*xx*	MPL-A/B2*xx*
Shaft Runout (T.I.R.)	0.030 (0.0012)	0.035 (0.0014)
Pilot Eccentricity (T.I.R.)	0.08 (0.0031)	0.08 (0.0031)
Max Face Runout (T.I.R.)	0.08 (0.0031)	0.08 (0.0031)
Keyway Depth (G)	7.10...7.20 (0.280...0.283)	8.40...8.50 (0.331...0.335)
Keyway Width (F)	2.971...2.996 (0.117...0.118)	3.97...4.00 (0.156...0.157)

MPL-A/B15*xx* and MPL-A/B2*xx* Motor Dimensions (SpeedTec DIN connectors)

Motor Cat. No.	AD mm (in.)	HD mm (in.)	T mm (in.)	LA mm (in.)	LD (1) mm (in.)	LE (1) mm (in.)	L (1) mm (in.)	LB (1) mm (in.)	L-LB (2) mm (in.)	D (3) mm (in.)	M mm (in.)	S (4) mm (in.)	N (3) mm (in.)	P mm (in.)	G (3) mm (in.)	F (3) mm (in.)
MPL-A/B1510	68.9 (2.71)	96.4 (3.80)	2.50 (0.098)	9.0 (0.35)	78.3 (3.08)	37.8 (1.49)	133.2 (5.25)	113.5 (4.47)	19.7 (0.776)	9.0 (0.35)	63.0 (2.480)	5.80 (0.228)	40.0 (1.57)	55.0 (2.17)	7.2 (0.283)	3.0 (0.118)
MPL-A/B1520					91.3 (3.60)	50.9 (2.00)	146.2 (5.76)	126.5 (4.98)								
MPL-A/B1530					116.3 (4.58)	76.7 (2.98)	171.2 (6.74)	151.5 (5.96)								
MPL-A/B210	76.2 (3.00)	111.2 (4.38)	2.50 (0.098)	9.0 (0.35)	78.6 (3.09)	38.4 (1.51)	137.3 (5.40)	114.6 (4.51)	22.7 (0.894)	11.0 (0.43)	75.0 (2.953)	5.80 (0.228)	60.0 (2.36)	70.0 (2.76)	8.5 (0.335)	4.0 (0.157)
MPL-A/B220					104.1 (4.10)	63.9 (2.52)	162.8 (6.41)	140.1 (5.52)								
MPL-A/B230					129.6 (5.10)	89.4 (3.52)	188.3 (7.41)	165.6 (6.52)								

(1) If ordering an MPL-A/B1510, MPL-A/B1520, or MPL-A/B1530 motor with brake, add 36.1 mm (1.421 in.) to dimension L and LB, and add 33.4 mm (1.32 in.) to LD and LE.
If ordering an MPL-A/B210, A/B220, or A/B230 motor with brake, add 39.0 mm (1.535 in.) to dimension L and LB, and add 24.7 mm (0.97 in.) to LD and LE.
(2) Tolerance for this dimension is ±0.7 mm (±0.028 in.).
(3) For keyway, shaft diameter, and pilot diameter tolerances, refer to page 98.
(4) Tolerance for this dimension is +0.3 mm (+0.012 in.).

Motors are designed to metric dimensions. Inch dimensions are approximate conversions from millimeters. Dimensions without tolerances are for reference.

MPL-A/B3xx, MPL-A/B4xx, MPL-A/B45xx, MPL-A/B5xx Motor Dimensions (SpeedTec DIN connectors)

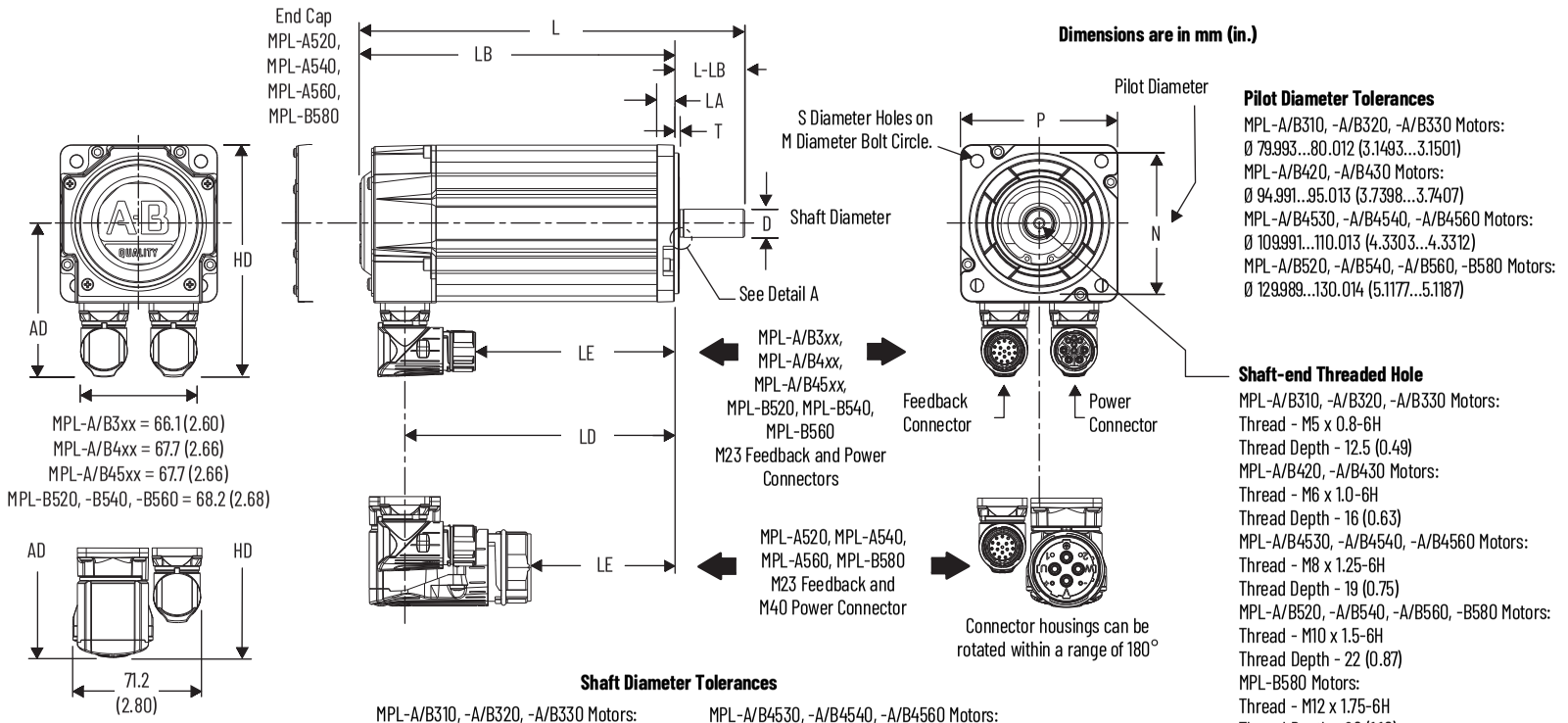

Dimensions are in mm (in.)

Pilot Diameter Tolerances

MPL-A/B310, -A/B320, -A/B330 Motors:
Ø 79.993...80.012 (3.1493...3.1501)
MPL-A/B420, -A/B430 Motors:
Ø 94.991...95.013 (3.7398...3.7407)
MPL-A/B4530, -A/B4540, -A/B4560 Motors:
Ø 109.991...110.013 (4.3303...4.3312)
MPL-A/B520, -A/B540, -A/B560, -B580 Motors:
Ø 129.989...130.014 (5.1177...5.1187)

Shaft-end Threaded Hole

MPL-A/B310, -A/B320, -A/B330 Motors:
Thread - M5 x 0.8-6H
Thread Depth - 12.5 (0.49)
MPL-A/B420, -A/B430 Motors:
Thread - M6 x 1.0-6H
Thread Depth - 16 (0.63)
MPL-A/B4530, -A/B4540, -A/B4560 Motors:
Thread - M8 x 1.25-6H
Thread Depth - 19 (0.75)
MPL-A/B520, -A/B540, -A/B560, -B580 Motors:
Thread - M10 x 1.5-6H
Thread Depth - 22 (0.87)
MPL-B580 Motors:
Thread - M12 x 1.75-6H
Thread Depth - 28 (1.10)

Detail A

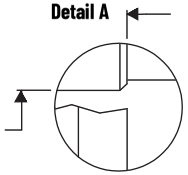

MPL-A/B3xx, -A/B4xx, Motors:
Flush to 2.87 (0.113) Pilot
± 0,83 (0.032)
MPL-A/B45xx, -A/B5xx, Motors:
Flush to 3.38 (0.133) Pilot
± 0,83 (0.032)

MPL-A/B310, -A/B320, -A/B330 Motors:
Ø 16.94 ±0.05 (0.667 ±0.002)
MPL-A/B420, -A/B430 Motors:
Ø 19.94 ±0.05 (0.785 ±0.002)
MPL-A/B4530, -A/B4540, -A/B4560 Motors:
Ø 24.94 ±0.05 (0.982 ±0.002)
MPL-A/B520, -A/B540, -A/B560, -B580 Motors:
Ø 29.92 ±0.05 (1.178 ±0.002)

Shaft Diameter Tolerances

MPL-A/B310, -A/B320, -A/B330 Motors:
Ø 15,997...16,008 (0.6298...0.6301)
MPL-A/B420, -A/B430 Motors:
Ø 18,996...19,009 (0.7479...0.7483)

MPL-A/B4530, -A/B4540, -A/B4560 Motors:
Ø 23,996...24,009 (0.9448...0.9451)
MPL-A/B520, -A/B540, -A/B560 Motors:
Ø 27,996...28,009 (1.1022...1.1027)
MPL-B580 Motors:
Ø 32,018...32,002 (1.2605...1.2599)

Optional Shaft Seal

Refer to page 91
for Kinetix MPL motor
shaft-seal kit information.

Shaft Detail with Key

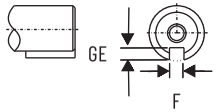

MPL-A/B3xx = 5 x 5 x 25 Key
MPL-A/B4xx = 6 x 6 x 25 Key
MPL-A/B45xx = 8 x 7 x 32 Key
MPL-A/B520, MPL-A/B540, and
MPL-A/B560 = 8 x 7 x 40 Key
MPL-A/B580 = 10 x 8 x 59 Key

Shaft, Pilot, and Keyway Tolerances	MPL-A/B3xx	MPL-A/B4xx	MPL-A/B45xx	MPL-A/B5xx	MPL-B580
Shaft Runout (T.I.R.)	0.035 (0.0014)	0.04 (0.0016)	0.04 (0.0016)	0.04 (0.0016)	0.05 (0.002)
Pilot Eccentricity (T.I.R.)	0.08 (0.0031)	0.08 (0.0031)	0.10 (0.0039)	0.10 (0.0039)	0.10 (0.0039)
Max Face Runout (T.I.R.)	0.08 (0.0031)	0.08 (0.0031)	0.10 (0.0039)	0.10 (0.0039)	0.10 (0.0039)
Keyway Depth (GE)	3.00...3.10 (0.118...0.122)	3.50...3.60 (0.138...0.142)	4.00...4.20 (0.158...0.165)	4.00...4.20 (0.158...0.165)	5.00...5.20 (0.197...0.205)
Keyway Width (F)	4.97...5.00 (0.196...0.197)	5.97...6.00 (0.235...0.236)	7.96...8.00 (0.314...0.315)	7.964...8.000 (0.3135...0.3150)	9.964...10.000 (0.3923...0.3937)

MPL-A/B3*xx*, MPL-A/B4*xx*, MPL-A/B45*xx*, MPL-A/B5*xx* Motor Dimensions (SpeedTec DIN connectors)

Motor Cat. No.	AD mm (in.)	HD mm (in.)	T mm (in.)	LA mm (in.)	LD (1) mm (in.)	LE (1) mm (in.)	L (1) mm (in.)	LB (1) mm (in.)	L-LB (2) mm (in.)	D (3) mm (in.)	M mm (in.)	S (4) mm (in.)	N (3) mm (in.)	P mm (in.)	GE (3) mm (in.)	F (3) mm (in.)
MPL-A/B310	87.2 (3.44)	132.0 (5.20)	2.74 (0.108)	9.90 (0.39)	102.0 (4.03)	62.0 (2.45)	168.0 (6.62)	128.0 (5.04)	40.0 (1.58)	16.0 (0.629)	100.0 (3.937)	7.0 (0.283)	80.0 (3.15)	89.4 (3.52)	3.0 (0.118)	5.0 (0.197)
MPL-A/B320					128.0 (5.03)	88.0 (3.45)	193.0 (7.62)	153.0 (6.04)								
MPL-A/B330					153.0 (6.03)	113.0 (4.45)	219.0 (8.62)	179.0 (7.04)								
MPL-A/B420	90.9 (3.58)	140.1 (5.52)	2.74 (0.108)	10.16 (0.40)	124.0 (4.89)	84.0 (3.31)	190.0 (7.48)	150.0 (5.90)	40.0 (1.58)	19.0 (0.748)	115.0 (4.528)	10.0 (0.401)	95.0 (3.74)	98.3 (3.87)	3.5 (0.138)	6.0 (0.236)
MPL-A/B430					150.0 (5.89)	110.0 (4.31)	215.0 (8.48)	175.0 (6.90)								
MPL-A/B4530	98.6 (3.88)	155.4 (6.12)	2.74 (0.108)	12.19 (0.48)	153.0 (6.02)	113.0 (4.44)	229.0 (9.0)	179.0 (7.03)	50.0 (1.97)	24.0 (0.945)	130.0 (5.118)	10.0 (0.401)	110.0 (4.331)	113.7 (4.48)	4.0 (0.158)	8.0 (0.315)
MPL-A/B4540					178.0 (7.02)	138.0 (5.44)	254.0 (10.0)	204.0 (8.03)								
MPL-A/B4560					229.0 (9.02)	189.0 (7.44)	305.0 (12.0)	255.0 (10.03)								
MPL-A520	136.4 (5.37)	208.1 (8.19)	3.12 (0.123)	14.0 (0.55)	151.0 (5.95)	80.0 (3.15)	236.0 (9.28)	176.0 (6.92)	60.0 (2.362)	28.0 (1.102)	165.0 (6.496)	12.0 (0.481)	130.0 (5.118)	143.5 (5.65)	4.0 (0.158)	8.0 (0.315)
MPL-A540					202.0 (7.95)	131.0 (5.15)	287.0 (11.28)	227.0 (8.92)								
MPL-A560					253.0 (9.95)	182.0 (7.15)	337.0 (13.28)	277.0 (10.92)								
MPL-B520	113.4 (4.47)	185.2 (7.29)	3.12 (0.123)	14.0 (0.55)	149.0 (5.88)	109.0 (4.30)	236.0 (9.28)	176.0 (6.92)	60.0 (2.38)	28.0 (1.102)	165.0 (6.496)	12.0 (0.481)	130.0 (5.118)	143.5 (5.65)	4.0 (0.158)	8.0 (0.315)
MPL-B540					200.0 (7.88)	160.0 (6.30)	287.0 (11.28)	227.0 (8.92)								
MPL-B560					251.0 (9.88)	211.0 (8.30)	337.0 (13.28)	277.0 (10.92)								
MPL-B580	136.4 (5.37)	208.1 (8.19)	3.12 (0.123)	14.0 (0.55)	304.0 (11.95)	232.0 (9.15)	408.0 (16.07)	328.0 (12.92)	80.0 (3.15)	32.0 (1.260)					5.0 (0.198)	10.0 (0.393)

(1) If ordering an MPL-A/B310, MPL-A/B320, or MPL-A/B330 motor with brake, add 35.0 mm (1.38 in.) to dimensions L, LB, LE, and LD.
If ordering an MPL-A/B420, MPL-A/B430, MPL-A/B4530, MPL-A/B4540, or MPL-A/B4560 motor with brake, add 48.0 mm (1.89 in.) to dimensions L, LB, LE, and LD.
If ordering an MPL-A/B520, MPL-A/B540, MPL-A/B560, or MPL-B580 motor with brake, add 52.0 mm (2.03 in.) to dimensions L, LB, LE, and LD.
(2) Tolerance for this dimension is ±0.7 mm (±0.028 in.).
(3) For keyway, shaft diameter, and pilot diameter tolerances, refer to page 100.
(4) Tolerance for this dimension is +0.36 mm (±0.007 in.) on MPL-A/B3*xx*, MPL-A/B4*xx*, MPL-A/B45*xx*, and +0.43 mm (±0.008 in.) on MPL-A/B5*xx*.

MPL-A/B6xx Motor Dimensions (SpeedTec DIN connectors)

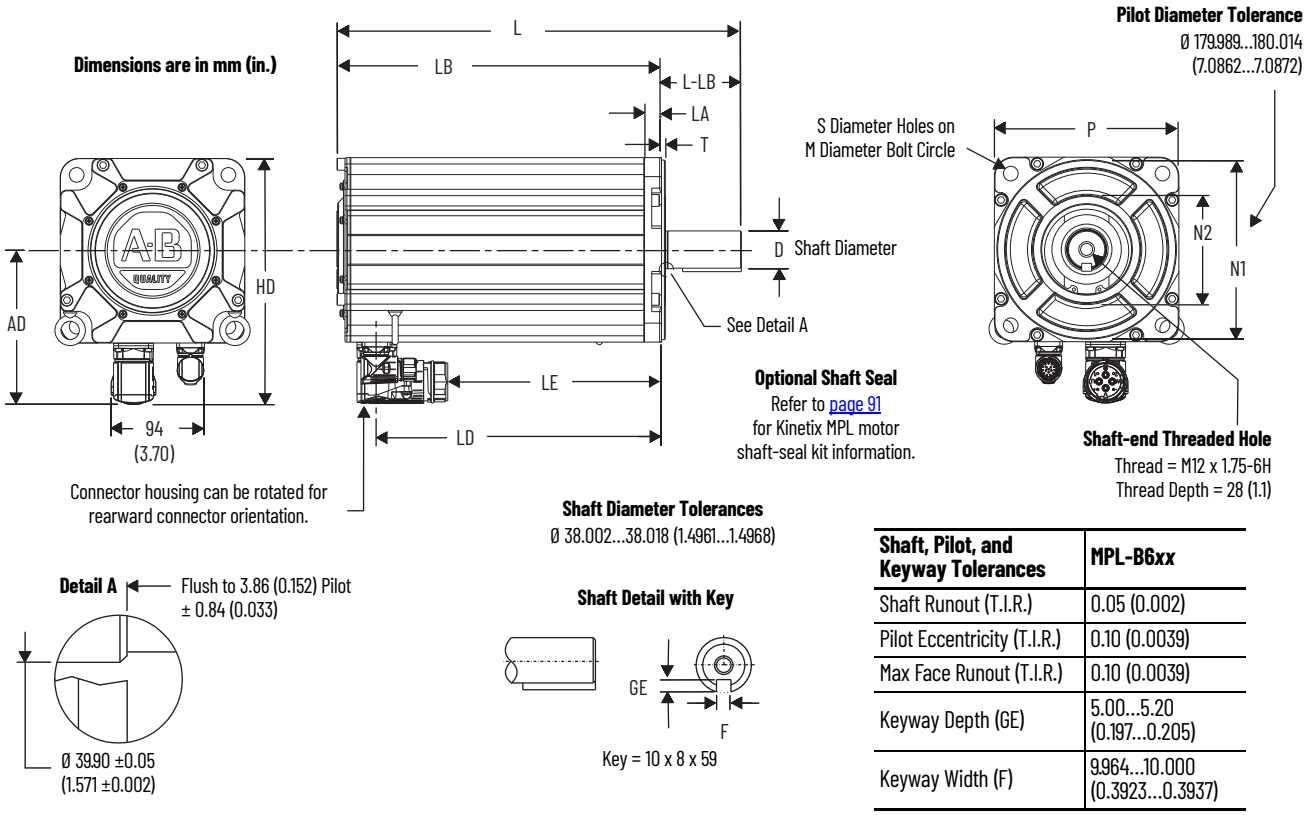

Shaft, Pilot, and Keyway Tolerances	MPL-B6xx
Shaft Runout (T.I.R.)	0.05 (0.002)
Pilot Eccentricity (T.I.R.)	0.10 (0.0039)
Max Face Runout (T.I.R.)	0.10 (0.0039)
Keyway Depth (GE)	5.00...5.20 (0.197...0.205)
Keyway Width (F)	9.964...10.000 (0.3923...0.3937)

Motor Cat. No.	AD mm (in.)	HD mm (in.)	T mm (in.)	LA mm (in.)	LD (1) mm (in.)	LE (1) mm (in.)	L (1) mm (in.)	LB (1) mm (in.)	L-LB (2) mm (in.)	D mm (in.)	M mm (in.)	S (3) mm (in.)	N mm (in.)	P mm (in.)	GE mm (in.)	F mm (in.)
MPL-B640	154.0 (6.06)	246.5 (9.70)	3.73 (0.147)	17.8 (0.70)	184.0 (7.23)	113.0 (4.43)	304.0 (11.96)	224.0 (8.83)	80.0 (3.15)	38.0 (1.5)	215.0 (8.465)	14.50 (0.579)	180.0 (7.09)	184.9 (7.28)	5.0 (0.197)	10.0 (0.394)
MPL-A/B660					234.0 (9.23)	163.0 (6.43)	355.0 (13.96)	275.0 (10.83)								
MPL-B680					285.0 (11.23)	214.0 (8.43)	405.0 (15.96)	325.0 (12.83)								

(1) If ordering an MPL-B640, MPL-B660, or MPL-B680 motor with brake, add 89 mm (3.5 in.) to dimensions LD, LE, L, and LB.
(2) Tolerance for this dimension is ±0.7 mm (±0.028 in.).
(3) Tolerance for this dimension is ±0.215 mm (±0.008 in.).

Motors are designed to metric dimensions. Inch dimensions are approximate conversions from millimeters. Dimensions without tolerances are for reference.

MPL-B8*xx* Motor Dimensions (SpeedTec DIN connectors)

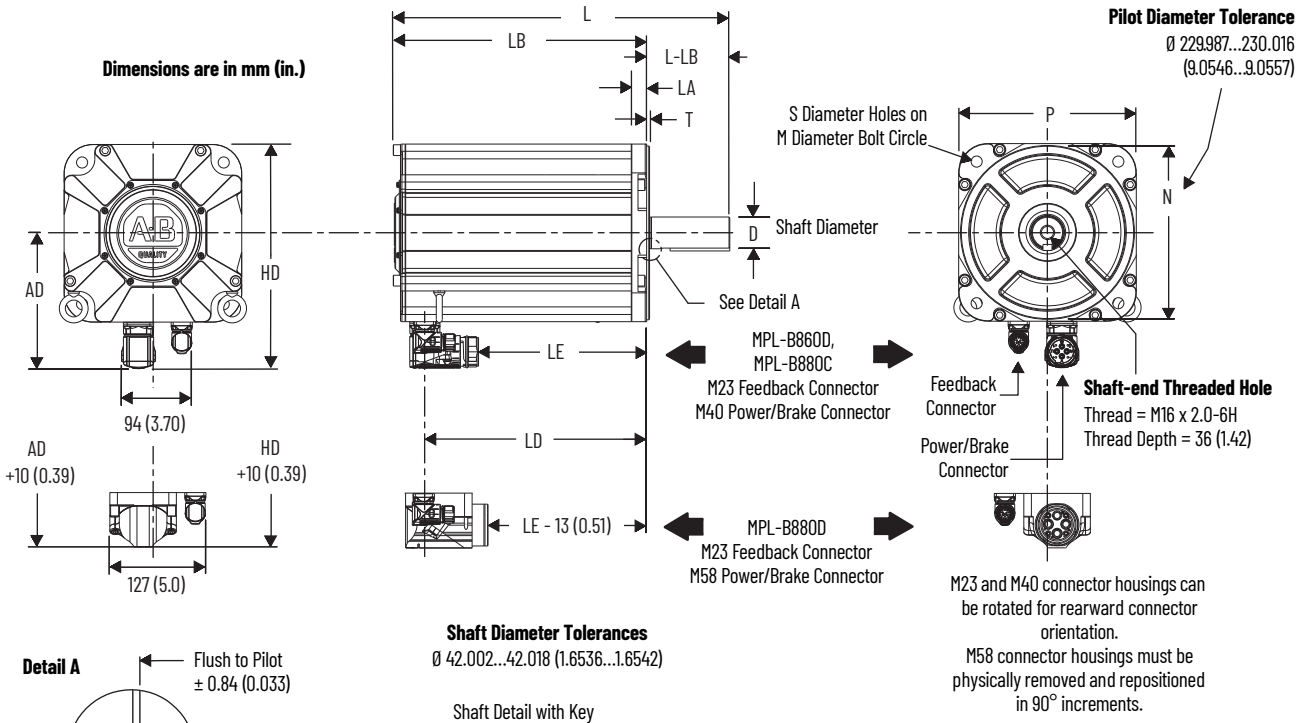

Optional Shaft Seal
Refer to page 91 for Kinetix MPL motor shaft-seal kit information.

Shaft, Pilot, and Keyway Tolerances	MPL-B8*xx*
Shaft Runout (T.I.R.)	0.05 (0.0016)
Pilot Eccentricity (T.I.R.)	0.10 (0.0039)
Max Face Runout (T.I.R.)	0.10 (0.0039)
Keyway Depth (GE)	5.00...5.20 (0.197...0.205)
Keyway Width (F)	11.957...12.000 (0.4708...0.4724)

Motor Cat. No.	AD mm (in.)	HD mm (in.)	T mm (in.)	LA mm (in.)	LD (1) mm (in.)	LE (1) mm (in.)	L (1) mm (in.)	LB (1) mm (in.)	L-LB (2) mm (in.)	D mm (in.)
MPL-B860	179 (7.05)	297 (11.67)	3.86 (0.152)	20.3 (0.80)	243 (9.55)	171 (6.75)	394 (15.53)	284 (11.20)	110 (4.33)	42.0 (1.654)
MPL-B880					293 (11.55)	222 (8.75)	445 (17.53)	335 (13.20)		

(1) If ordering an MPL-B860 or MPL-B880 motor with brake, add 108 mm (4.24 in.) to dimensions LD, LE, L, and LB.
(2) Tolerance for this dimension is ±0.7 mm (±0.028 in.).

Motor Cat. No.	M mm (in.)	S (1) mm (in.)	N mm (in.)	P mm (in.)	GE mm (in.)	F mm (in.)
MPL-B860	265 (10.43)	14.50 (0.579)	230 (9.055)	235 (9.25)	5.0 (0.197)	12.0 (0.4724)
MPL-B880						

(1) Tolerance for this dimension is +0.43 mm (±0.008 in.).

Motors are designed to metric dimensions. Inch dimensions are approximate conversions from millimeters. Dimensions without tolerances are for reference.

MPL-B9*xx* Motor Dimensions (SpeedTec DIN connectors)

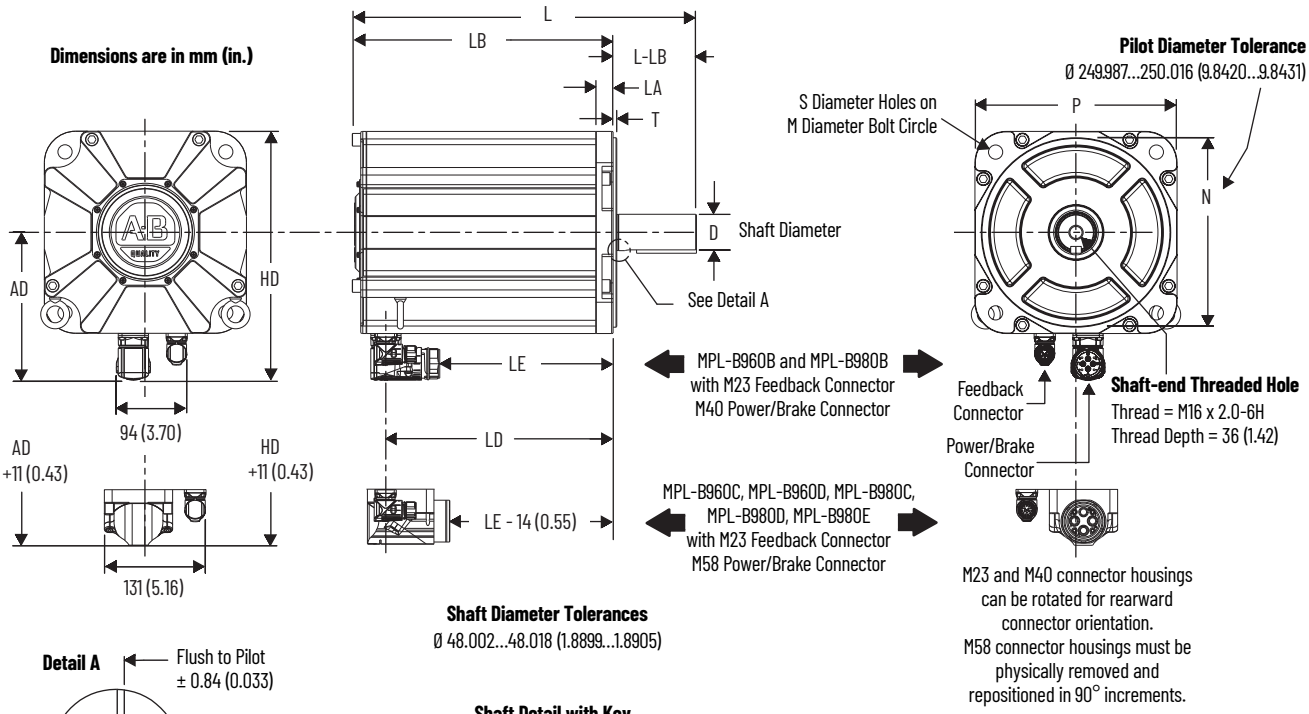

Optional Shaft Seal
Refer to page 91 for Kinetix MPL motor shaft-seal kit information.

Shaft, Pilot, and Keyway Tolerances	MPL-B9*xx*
Shaft Runout (T.I.R.)	0.05 (0.002)
Pilot Eccentricity (T.I.R.)	0.125 (0.005)
Max Face Runout (T.I.R.)	0.125 (0.005)
Keyway Depth (GE)	5.50...5.70 (0.217...0.224)
Keyway Width (F)	13.957...14.000 (0.5495...0.5512)

Motor Cat. No.	AD mm (in.)	HD mm (in.)	T mm (in.)	LA mm (in.)	LD (1) mm (in.)	LE (1) mm (in.)	L (1) mm (in.)	LB (1) mm (in.)	L-LB (2) mm (in.)	D mm (in.)
MPL-B960	195 (7.68)	328 (12.92)	4.88 (0.192)	22.9 (0.90)	249 (9.80)	178 (7.0)	403 (15.87)	293 (11.55)	110 (4.33)	48.0 (1.89)
MPL-B980					300 (11.80)	229 (9.0)	454 (17.87)	344 (13.55)		

(1) If ordering an MPL-B960 or MPL-B980 motor with brake, add 127 mm (5.0 in.) to dimensions LD, LE, L, and LB.
(2) Tolerance for this dimension is ±0.7 mm (±0.028 in.).

Motor Cat. No.	M mm (in.)	S (1) mm (in.)	N mm (in.)	P mm (in.)	GE mm (in.)	F mm (in.)
MPL-B960	300 (11.81)	18.50 (0.738)	250 (9.84)	267 (10.50)	5.50 (0.217)	14.0 (0.5512)
MPL-B980						

(1) Tolerance for this dimension is +0.52 mm (±0.010 in.).

Motors are designed to metric dimensions. Inch dimensions are approximate conversions from millimeters. Dimensions without tolerances are for reference.

Kinetix MPM Medium-inertia Servo Motors

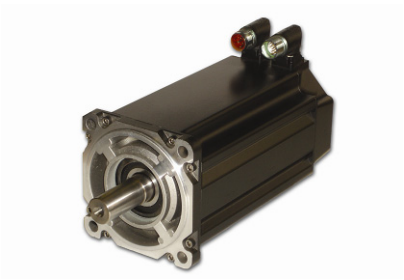

Kinetix MPM servo motors offer a compact, power dense, feature-rich solution for applications with heavier loads and greater inertia. Leveraging the proven Kinetix MPL servo motor technology and quality standards, these servo motors are ideal for print, converting, web handling, automotive, and other applications with high inertias and heavy payloads.

Kinetix MPM Servo Motor Features

Attribute	Value
Main characteristics	• High torque to size ratio • Smart Motor Technology • Hiperface encoder protocol • Medium rotor inertia • Easy migration from 1326AB motors
Features	• 200V and 400V-class windings • Single-turn and multi-turn absolute feedback • Resolver feedback option • Multiple winding speed options • High-energy rare-earth magnets • Shaft-end threaded hole • SpeedTec DIN connectors, rotates 180° • Standard IEC 72-1 mounting dimensions
Motor type	Brushless AC synchronous servo motors
Environmental rating	• IP50 minimum, without shaft seal (standard) • IP66 with optional shaft seal and use of Rockwell Automation factory-delivered Kinetix 2090 cables
Certifications	Kinetix MPM rotary motors are UL Recognized components to applicable UL and CSA standards. CE marked for all applicable directives. Refer to rok.auto/certifications for the Product Certifications website.
Continuous stall torque	2.18…62.8 N•m (19.3…556 lb•in)
Peak stall torque	6.6…154.2 N•m (58…1365 lb•in)
Rated speed	Up to 7000 rpm
Motor rated output	0.75…7.50 kW
Compatible servo drives	• Kinetix 5500 (1) • Kinetix 5700 • Kinetix 6200/6500 • Kinetix 6000 • Kinetix 300/350 • Kinetix 2000 • Kinetix 7000 • ArmorKinetix DSD
Compatible servo cables	• 2090-CxxM7*xx* cables • 2090-CSBM1P7-14AF*xx* (PUR) cables • 2090-CFBM7S7-CDAF*xx* (PUR) cables
Typical applications	• Printing • Web handling • Converting • Automotive

(1) Requires the 2198-H2DCK Hiperface-to-DSL feedback converter kit. Kinetix MPM (200V-class) motors require the 2198-H2DCK (series B or later) converter kit.

Catalog Numbers - Kinetix MPM Servo Motors

Catalog numbers consist of various characters, each of which identifies a specific option for that component. Use the catalog numbering table chart below to understand the configuration of your motor. For questions regarding product availability, contact your Allen-Bradley distributor.

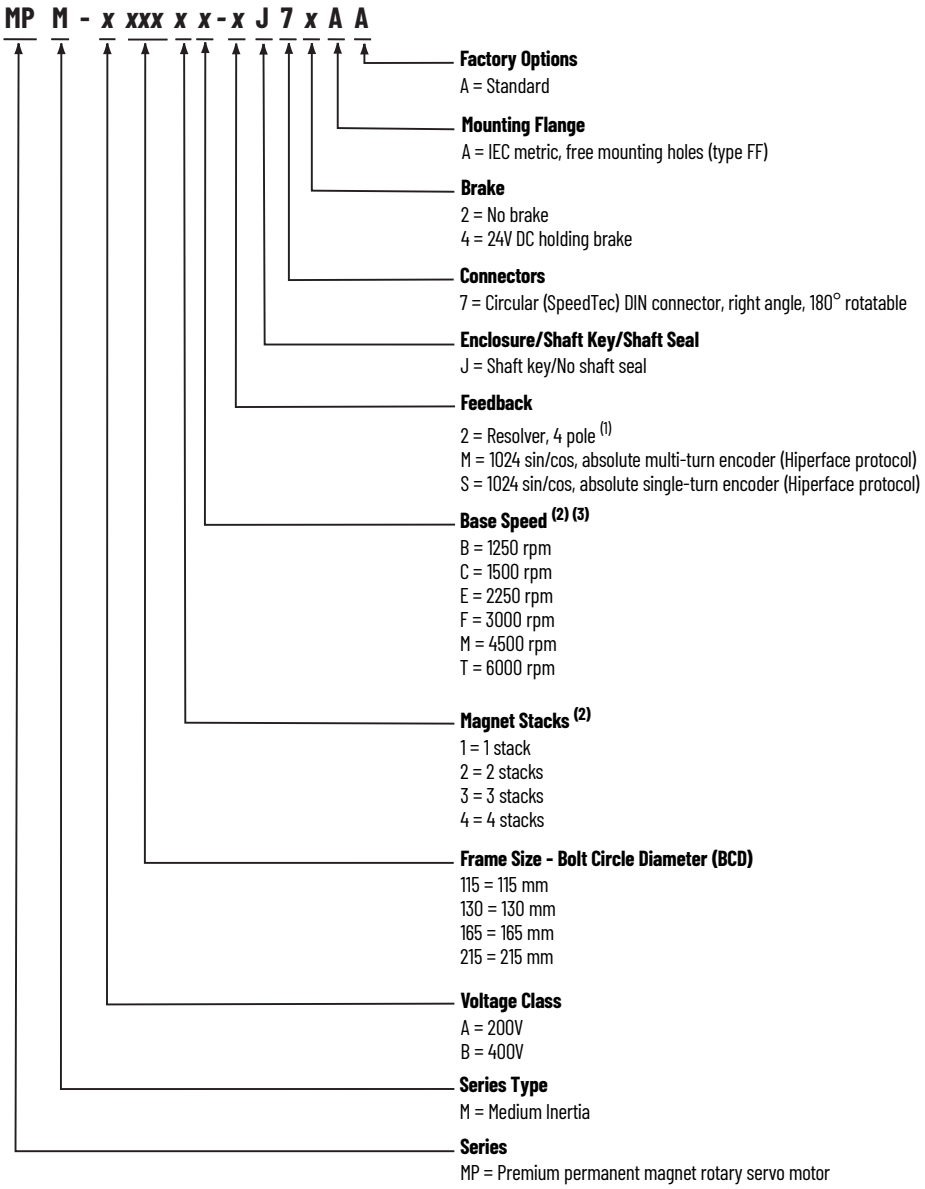

(1) Resolver feedback is not available on all models.
(2) Not all combinations are available. Only the configurations for rated speed and magnet stacks, as listed in Kinetix MPM Servo Motor (200V-class) Performance Specifications on page 108 and on page 108, are available. Use Motion Analyzer software to size and select motors for your application.
(3) Base speed equals maximum speed at peak torque. Maximum speed is servo drive dependent.

Kinetix MPM Servo Motor High-resolution Encoders

Kinetix MPM servo motors are available with high performance encoders with a choice of single-turn (-S) or multi-turn (-M) high-resolution feedback:

- 1024 sin/cos cycles per revolution for up to 21-bit resolution (2,097,152 counts per revolution) -M and -S (MPM-A/B115*x*, MPM-A/B130*x*, MPM-A/B165*x*, and MPM-A/B215*x* motors.
- Single-turn encoder provides high-resolution absolute position feedback within one turn.
- Multi-turn encoder provides high-resolution absolute position feedback within 4096 turns. The electromechanical design does not require a battery.

Motor Connector/Cable Compatibility

Kinetix MPM servo motors are equipped with SpeedTec DIN connectors.

SpeedTec DIN Connectors

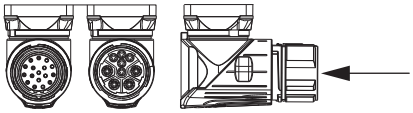

- MPM-A/B*xxx* motors
- Receives M4 and M7 cable plugs (O-ring required for M4)
- Attach M7 cable plug with one-quarter turn

SpeedTec DIN (M7) Cable Plug

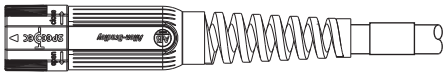

- 2090-CFBM7DF-CEAA*xx* (standard, non-flex) flying-lead, feedback cables
- 2090-CFBM7DD-CEAA*xx* (standard, non-flex) drive-end connector, feedback cables
- 2090-CFBM7DF-CEAF*xx* (continuous-flex) flying-lead, feedback cables
- 2090-CFBM7DD-CEAF*xx* (continuous-flex) drive-end connector, feedback cables
- 2090-CFBM7DF-CDAF*xx* (continuous-flex) flying-lead, feedback cables

- 2090-CPWM7DF-*xx*AA*xx* (standard, non-flex) power-only cables
- 2090-CPBM7DF-*xx*AA*xx* (standard, non-flex) power/brake cables
- 2090-CPWM7DF-*xx*AF*xx* (continuous-flex) power-only cables
- 2090-CPBM7DF-*xx*AF*xx* (continuous-flex) power/brake cables
- 2090-CPBM7DF-*xx*AF*xx* (continuous-flex) power/brake cables

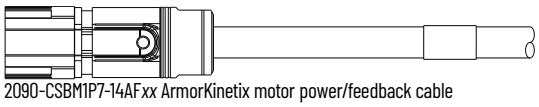

2090-CSBM1P7-14AF*xx* ArmorKinetix motor power/feedback cable

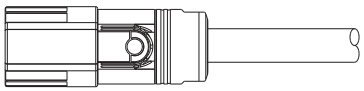

2090-CFBM7S7-CDAF*xx* ArmorKinetix feedback cable

Kinetix MPM Servo Motor Options

Kinetix MPM servo motors are available with these options:

- 24V DC holding brake.
- The positive air-pressure kit (catalog number MPF-7-AIR-PURGE) is mounted on the feedback connector to provide positive air pressure to further reduce the chance of contamination inside the motor.
- Shaft seal kits are available, as are replacement kits for field installation. Shaft seals are made of nitrile and kits include a lubricant to reduce wear.

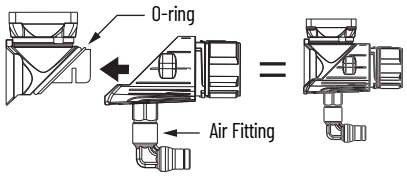

IMPORTANT Shaft seals are subject to wear and require periodic inspection and replacement. Replacement is recommended every 3 months, not to exceed 12 months, depending on use.

Shaft Seal Kit Catalog Numbers

Motor Cat. No.	Shaft Seal Kit Cat. No.
MPM-A115*xx* and MPL-B115*xx*	MPL-SSN-A4B4
MPM-A130*xx* and MPL-B130*xx*	MPL-SSN-A5B5
MPM-A165*xx* and MPM-B165*xx*	MPL-SSN-F165
MPM-A215*xx* and MPL-B215*xx*	MPL-SSN-A6B6

Refer to the Kinetix MPM Medium-inertia Servo Motor Installation Instructions, publication MPM-IN001, for more information on motor accessories.

Technical Specifications - Kinetix MPM Servo Motors

Kinetix MPM Servo Motor (200V-class) Performance Specifications

Motor Cat. No.	Base Speed rpm	Rated Speed rpm	Maximum Speed rpm	Continuous Stall Torque N•m (lb•in)	Peak Stall Torque N•m (lb•in)	Motor Rated Output kW	Rotor Inertia (1) kg-m^2 (lb•in•s^2)	Motor Weight, (1) approx kg (lb)
MPM-A1151M	4500	5000	6000	2.18 (19.3)	6.60 (58.0)	0.90	0.00065 (0.00575)	3.45 (7.6)
MPM-A1152F	3000	4000	5000	4.74 (42.0)	13.5 (119)	1.40	0.00077 (0.00682)	5.20 (11.4)
MPM-A1153F	3000	4000	5000	6.55 (58.0)	19.8 (175)	1.45	0.00089 (0.00784)	6.4 (14.0)
MPM-A1302F	3000	4000	4500	5.99 (53.0)	13.5 (119)	1.65	0.000983 (0.00870)	6.8 (15.0)
MPM-A1304F	3000	3500	4000	9.30 (82.0)	19.3 (171)	2.20	0.001223 (0.01082)	9.6 (21.2)
MPM-A1651F	3000	3000	5000	10.7 (95.0)	20.5 (181)	2.50	0.006605 (0.05846)	15.3 (33.8)
MPM-A1652F	3000	3500	4000	13.5 (119)	36.0 (319)	4.03	0.007265 (0.06430)	20.6 (45.4)
MPM-A1653F	3000	3000	4000	18.6 (165)	42.0 (372)	5.10	0.008025 (0.07103)	25.6 (56.4)
MPM-A2152F	3000	2000	4000	27.0 (239)	56.0 (496)	5.20	0.02059 (0.18223)	35.8 (79.0)
MPM-A2153F	3000	2000	3600	34.0 (301)	58.0 (513)	5.80	0.02254 (0.19950)	44.6 (98.3)
MPM-A2154C	1500	1750	2000	55.0 (487)	106 (938)	6.50	0.02449 (0.21675)	53.6 (118)
MPM-A2154E	2250	2000	2650	44.0 (389)	84.0 (743)	7.00		

(1) Refer to Kinetix MPM Servo Motor Brake Specifications on page 109 for brake rotor inertia and brake motor weight.

Kinetix MPM Servo Motor (400V-class) Performance Specifications

Motor Cat. No.	Base Speed rpm	Rated Speed rpm	Maximum Speed rpm	Continuous Stall Torque N•m (lb•in)	Peak Stall Torque N•m (lb•in)	Motor Rated Output kW	Rotor Inertia (1) kg-m^2 (lb•in•s^2)	Motor Weight, (1) approx kg (lb)
MPM-B1151F	3000	4000	5000	2.18 (19.3)	6.6 (58.0)	0.75	0.00065 (0.00575)	3.45 (7.6)
MPM-B1151T	6000	5000	7000			0.90		
MPM-B1152C	1500	2500	3000	4.74 (42.0)	13.5 (119)	1.20	0.00077 (0.00681)	5.20 (11.4)
MPM-B1152F	3000	4000	5200			1.40		
MPM-B1152T	6000		7000					
MPM-B1153E	2250	3000	3500	6.55 (58.0)	19.8 (175)	1.40	0.00089 (0.00788)	6.40 (14.0)
MPM-B1153F	3000	4000	5500			1.45		
MPM-B1153T	6000		7000					
MPM-B1302F	3000	4000	4500	5.99 (53.0)	13.5 (119)	1.65	0.000983 (0.00870)	6.80 (15.0)
MPM-B1302M	4500		6000					
MPM-B1302T	6000		7000					
MPM-B1304C	1500	1870	2750	10.2 (90.0)	27.1 (240)	2.00	0.001223 (0.01082)	9.60 (21.2)
MPM-B1304E	2250	3500	4000			2.20		
MPM-B1304M	4500		6000					
MPM-B1651C	1500	3000	3500	10.7 (95.0)	23.2 (205)	2.50	0.006605 (0.05846)	15.3 (33.8)
MPM-B1651F	3000		5000					
MPM-B1651M	4500		5000					

Kinetix MPM Servo Motor (400V-class) Performance Specifications (Continued)

Motor Cat. No.	Base Speed rpm	Rated Speed rpm	Maximum Speed rpm	Continuous Stall Torque N•m (lb•in)	Peak Stall Torque N•m (lb•in)	Motor Rated Output kW	Rotor Inertia (1) kg-m^2 (lb•in•s^2)	Motor Weight, (1) approx kg (lb)
MPM-B1652C	1500	2500	2500	16.0 (142)	40.0 (354)	3.80	0.007265 (0.06430)	20.6 (45.4)
MPM-B1652E	2250	3500	3500	19.4 (172)	48.0 (425)	4.30		
MPM-B1652F	3000		4500					
MPM-B1653C	1500	2000	2500	26.8 (237)	67.8 (600)	4.60	0.008025 (0.07103)	25.6 (56.4)
MPM-B1653E	2250	3000	3500		62.0 (549)	5.10		
MPM-B1653F	3000		4000		56.0 (496)			
MPM-B2152C	1500	2000	2500	36.7 (325)	72.3 (640)	5.60	0.02059 (0.18224)	35.8 (79.0)
MPM-B2152F	3000	2500	4500	33.0 (292)		5.90		
MPM-B2152M	4500		5000	30.0 (266)	50.0 (443)			
MPM-B2153B	1250	1750	2000	48.0 (425)	101.1 (895)	6.80	0.02254 (0.19949)	44.6 (98.3)
MPM-B2153E	2250	2000	3000			7.20		
MPM-B2153F	3000		3800	45.0 (398)	99.0 (876)			
MPM-B2154B	1250	1750	2000	62.8 (556)	154.2 (1365)	6.90	0.02449 (0.21675)	53.6 (118.2)
MPM-B2154E	2250	2000	3000	56.0 (496)	112.0 (991)	7.50		
MPM-B2154F	3000		3300		88.0 (779)			

(1) Refer to Kinetix MPM Servo Motor Brake Specifications on page 109 for brake rotor inertia and brake motor weight.

Kinetix MPM Servo Motor Brake Specifications

Motor Cat. No.	Backlash, max (brake engaged) arc minutes	Holding Torque N•m (lb•in)	Coil Current at 24V DC A	Brake Response Time			Brake Rotor Inertia kg-m^2 (lb•in•s^2)	Brake Motor Weight, approx kg (lb)
				Release ms	Engage (1)			
					MOV ms	Diode ms		
MPM-A/B1151	45	4.18 (37)	0.45…0.55	50	20	110	0.00065 (0.00575)	5.2 (11.4)
MPM-A/B1152							0.00077 (0.00681)	6.9 (15.2)
MPM-A/B1153							0.00089 (0.00788)	8.1 (17.8)
MPM-A/B1302	48	10.2 (90)	0.576…0.704	110	25	160	0.000983 (0.00870)	8.6 (19.0)
MPM-A/B1304							0.001223 (0.01082)	11.7 (25.7)
MPM-A/B1651	25	28.3 (250)	1.05…1.28	70	50	250	0.006605 (0.05846)	17.9 (39.5)
MPM-A/B1652							0.007265 (0.06430)	23.2 (51.1)
MPM-A/B1653							0.008025 (0.07103)	28.2 (62.1)
MPM-A/B2152	25	70 (619)	1.84…2.25	200	120	900	0.02059 (0.18224)	43.8 (96.5)
MPM-A/B2153							0.02254 (0.19949)	53.6 (115.8)
MPM-A/B2154							0.02449 (0.21675)	61.6 (135.7)

(1) By using an arc suppression device in external control circuit.

Kinetix MPM Servo Motor Load Force Ratings

Kinetix MPM servo motors are capable of operating with the maximum radial or maximum axial shaft loads listed in the following tables. Radial loads listed are applied in the middle of the shaft extension. The tables starting below represent an L_{10} bearing fatigue life of 20,000 hours. This 20,000-hour life does not account for possible application-specific life reduction that can occur due to bearing grease contamination from external sources. Maximum operating speed is limited by motor winding.

Load Forces on Shaft

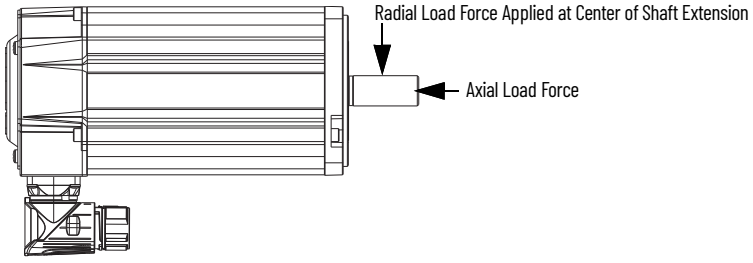

Radial Load Force Ratings

Motor Cat. No.	1000 rpm kg (lb)	2000 rpm kg (lb)	3000 rpm kg (lb)	5000 rpm kg (lb)	7000 rpm kg (lb)
MPM-A/B1151	77 (170)	61 (134)	54 (119)	45 (99)	40 (88)
MPM-A/B1152	84 (185)	66 (145)	58 (128)	49 (108)	43 (95)
MPM-A/B1153	88 (194)	70 (154)	61 (134)	51 (112)	46 (101)
MPM-A/B1302	105 (231)	83 (183)	72 (159)	61 (134)	54 (119)
MPM-A/B1304	115 (253)	91 (200)	80 (176)	67 (148)	–
MPM-A/B1651	141 (311)	112 (247)	97 (214)	82 (181)	–
MPM-A/B1652	151 (333)	119 (262)	104 (229)	–	–
MPM-A/B1653	156 (344)	123 (271)	107 (236)	–	–
MPM-A/B2152	216 (476)	171 (377)	149 (328)	–	–
MPM-A/B2153	228 (502)	180 (396)	156 (344)	–	–
MPM-A/B2154	235 (518)	185 (407)	161 (355)	–	–

Axial Load Force Ratings (maximum radial load)

Motor Cat. No.	1000 rpm kg (lb)	2000 rpm kg (lb)	3000 rpm kg (lb)	5000 rpm kg (lb)	7000 rpm kg (lb)
MPM-A/B1151	29 (64)	22 (48)	18 (40)	14 (31)	12 (26)
MPM-A/B1152	31 (68)	23 (51)	19 (42)	15 (33)	13 (29)
MPM-A/B1153	33 (73)	24 (53)	20 (44)	16 (35)	14 (31)
MPM-A/B1302	26 (57)	19 (42)	16 (35)	13 (29)	11 (24)
MPM-A/B1304	30 (66)	22 (48)	18 (40)	15 (33)	–
MPM-A/B1651	37 (81)	28 (62)	23 (51)	18 (40)	–
MPM-A/B1652	41 (90)	30 (66)	25 (55)	–	–
MPM-A/B1653	43 (95)	32 (70)	27 (59)	–	–
MPM-A/B2152	55 (121)	40 (88)	34 (75)	–	–
MPM-A/B2153	60 (132)	44 (97)	36 (79)	–	–
MPM-A/B2154	63 (139)	46 (101)	38 (84)	–	–

Axial Load Force Ratings (zero radial load)

Motor Cat. No.	1000 rpm kg (lb)	2000 rpm kg (lb)	3000 rpm kg (lb)	5000 rpm kg (lb)	7000 rpm kg (lb)
MPM-A/B1151	46 (101)	34 (75)	28 (62)	23 (51)	19 (42)
MPM-A/B1152	46 (101)	34 (75)	28 (62)	23 (51)	19 (42)
MPM-A/B1153	46 (101)	34 (75)	28 (62)	23 (51)	19 (42)
MPM-A/B1302	46 (101)	34 (75)	28 (62)	23 (51)	19 (42)
MPM-A/B1304	46 (101)	34 (75)	28 (62)	23 (51)	–
MPM-A/B1651	61 (134)	44 (97)	38 (84)	30 (66)	–
MPM-A/B1652	61 (134)	44 (97)	38 (84)	–	–
MPM-A/B1653	61 (134)	44 (97)	38 (84)	–	–
MPM-A/B2152	90 (198)	65 (143)	54 (119)	–	–
MPM-A/B2153	90 (198)	65 (143)	54 (119)	–	–
MPM-A/B2154	90 (198)	65 (143)	54 (119)	–	–

Dimensions - Kinetix MPM Servo Motors

MPM-A/B115*xx*, MPM-A/B130*xx*, MPM-A/B165*xx* Motor Dimensions

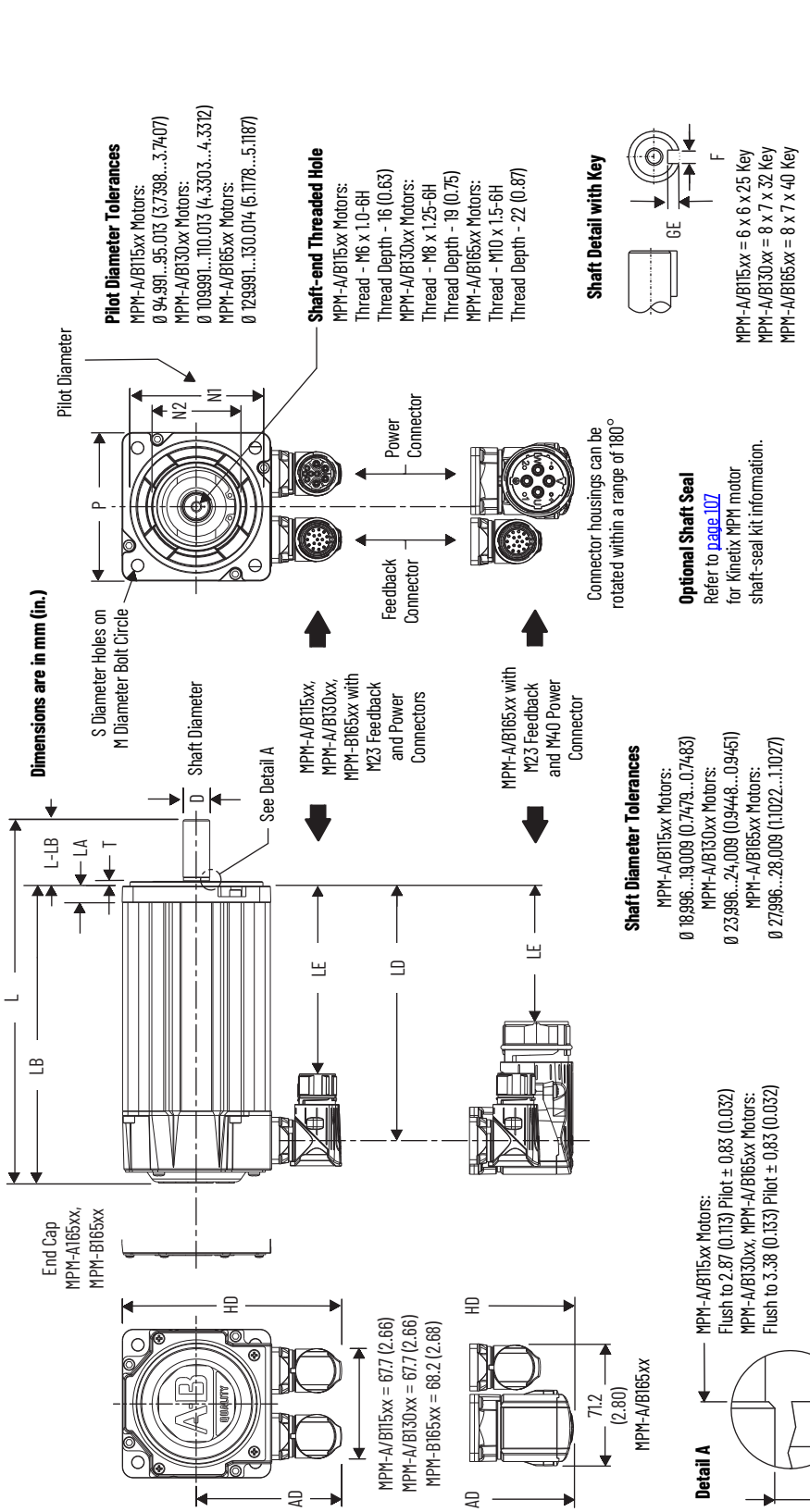

Power Connectors on MPM-A/B165*xx* Motors		MPM-A165*xx* Cat. No.	MPM-B165*xx* Cat. No.
M23 Power Connector		N/A	MPM-B1651F, MPM-B1651C, MPM-B1652C, MPM-B1653C
M40 Power Connector		MPM-A165*xx*	MPM-B1651M, MPM-B1652E, MPM-B1652F, MPM-B1653E, MPM-B1653F

Shaft, Pilot, and Keyway Tolerances	MPM-A/B115*xx*	MPM-A/B130*xx*	MPM-A/B165*xx*
Shaft Runout (T.I.R.)	0.04 (0.0016)	0.04 (0.0016)	0.04 (0.0016)
Pilot Eccentricity (T.I.R.)	0.08 (0.0031)	0.10 (0.0039)	0.10 (0.0039)
Max Face Runout (T.I.R.)	0.08 (0.0031)	0.10 (0.0039)	0.10 (0.0039)
Keyway Depth (GE)	3.50...3.60 (0.138...0.142)	4.00...4.20 (0.158...0.165)	4.00...4.20 (0.158...0.165)
Keyway Width (F)	5.97...6.00 (0.235...0.236)	7.96...8.00 (0.314...0.315)	7.964...8.000 (0.3135...0.3150)

MPM-A/B115x, MPM-A/B130x, MPM-A/B165x Motor Dimensions

Motor Cat. No.	AD (1) mm (in.)	HD (1) mm (in.)	T mm (in.)	LA mm (in.)	LD (2) (3) mm (in.)	LE (2) (4) mm (in.)	L (2) mm (in.)	LB (2) mm (in.)	L-LB (5) mm (in.)	D (6) mm (in.)	M mm (in.)	S (7) mm (in.)	N1 (6) mm (in.)	N2 mm (in.)	P mm (in.)	GE (6) mm (in.)	F (6) mm (in.)
MPM-A/B1151	90.9 (3.58)	140.1 (5.52)	2.74 (0.108)	10.16 (0.40)	124 (4.89)	84.1 (3.31)	190 (7.48)	150 (5.90)	40.0 (1.58)	19.0 (0.748)	115.0 (4.528)	10.0 (0.401)	95.0 (3.74)	59.0 (2.32)	98.3 (3.87)	3.5 (0.138)	6.0 (0.236)
MPM-A/B1152					150 (5.89)	110 (4.31)	215 (8.48)	175 (6.90)									
MPM-A/B1153					175 (6.89)	135 (5.31)	241 (9.48)	201 (7.90)									
MPM-A/B1302	98.6 (3.88)	155.4 (6.12)	2.74 (0.108)	12.19 (0.48)	153 (6.02)	113 (4.44)	229 (9.0)	179 (7.03)	50.0 (1.97)	24.0 (0.945)	130.0 (5.118)	10.0 (0.401)	110.0 (4.331)	70.3 (2.77)	113.7 (4.48)	4.0 (0.158)	8.0 (0.315)
MPM-A/B1304					204 (8.02)	164 (6.44)	279 (11.0)	229 (9.03)									
MPM-A/B1651	113.4 (4.47)	185.2 (7.29)	3.12 (0.123)	14.0 (0.55)	200 (7.88)	160 (6.30)	287 (11.28)	227 (8.92)	60.0 (2.36)	28.0 (1.102)	165.0 (6.496)	12.0 (0.481)	130.0 (5.118)	81.0 (3.19)	143.5 (5.65)	4.0 (0.158)	8.0 (0.315)
MPM-A/B1652					251 (9.88)	211 (8.30)	337 (13.28)	277 (10.92)									
MPM-A/B1653					302 (11.88)	262 (10.30)	388 (15.28)	328 (12.92)									

(1) This dimension applies to MPM-B165x motors with M23 connectors. For MPM-A/B165x motors with M40 connectors, add 23 mm (0.91 in.).
(2) If ordering an MPM-A/B115x or MPM-A/B130x motor with brake, add 48.5 mm (1.91 in.) to dimensions L, LB, LE, and LD.
If ordering an MPM-A/B165x, motor with brake, add 51.5 mm (2.03 in.) to dimensions L, LB, LE, and LD.
(3) This dimension applies to MPM-B165x motors with M23 connectors. For MPM-A/B165x motors with M40 connectors, add 2.0 mm (0.07 in.).
(4) This dimension applies to MPM-B165x motors with M23 connectors. For MPM-A/B165x motors with M40 connectors, subtract 29.0 mm (1.15 in.).
(5) The tolerance for this dimension is ±0.7 mm (±0.028 in.).
(6) For keyway, shaft diameter, and pilot diameter tolerances, refer to page 111.
(7) For MPM-A/B115x and MPM-A/B130x motors, the tolerance for this dimension is +0.36 mm (±0.007 in.).
For MPM-A/B165x motors, the tolerance is +0.43 mm (±0.008 in.).

Motors are designed to metric dimensions. Inch dimensions are approximate conversions from millimeters. Dimensions without tolerances are for reference.

MPM-A/B215x Motor Dimensions

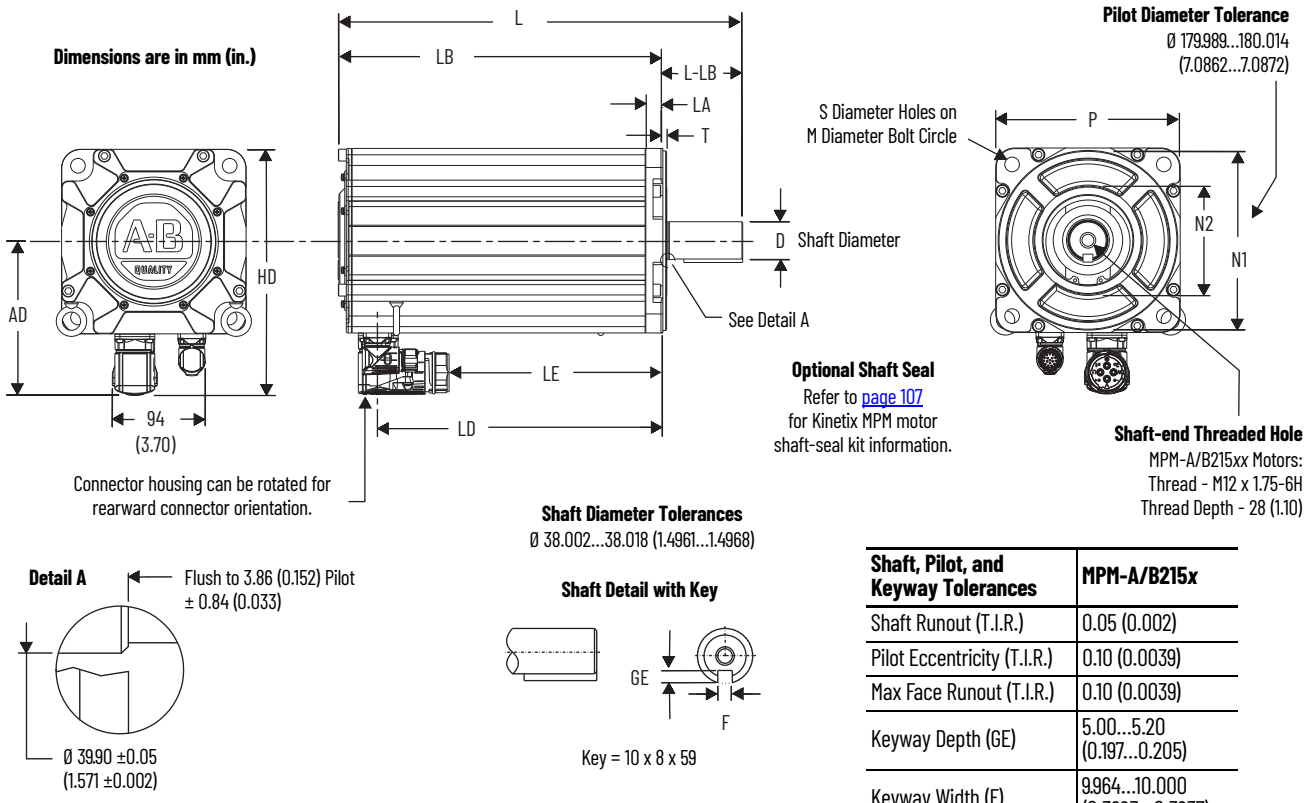

Shaft, Pilot, and Keyway Tolerances	MPM-A/B215x
Shaft Runout (T.I.R.)	0.05 (0.002)
Pilot Eccentricity (T.I.R.)	0.10 (0.0039)
Max Face Runout (T.I.R.)	0.10 (0.0039)
Keyway Depth (GE)	5.00...5.20 (0.197...0.205)
Keyway Width (F)	9.964...10.000 (0.3923...0.3937)

Motor Cat. No.	AD mm (in.)	HD mm (in.)	T mm (in.)	LA mm (in.)	LD (1) mm (in.)	LE (1) mm (in.)	L (1) mm (in.)	LB (1) mm (in.)	L-LB (2) mm (in.)	D mm (in.)	M mm (in.)	S (3) mm (in.)	N1 mm (in.)	N2 mm (in.)	P mm (in.)	GE mm (in.)	F mm (in.)
MPM-A/B2152	154 (6.06)	247 (9.70)	3.73 (0.147)	17.8 (0.70)	234 (9.23)	163 (6.43)	355 (13.96)	275 (10.81)	80.0 (3.150)	38.0 (1.50)	215 (8.465)	14.50 (0.579)	180 (7.09)	108 (4.25)	185 (7.28)	5.0 (0.197)	10.0 (0.394)
MPM-A/B2153					285 (11.23)	214 (8.43)	405 (15.96)	325 (12.81)									
MPM-A/B2154					336 (13.23)	265 (10.43)	456 (17.96)	376 (14.81)									

(1) If ordering an MPM-A/B215x motor with brake, add 88.9 mm (3.5 in.) to dimensions LD, LE, L, and LB.
(2) Tolerance for this dimension is ±0.7 mm (±0.028 in.).
(3) Tolerance for this dimension is +0.43 mm (±0.008 in.).

Motors are designed to metric dimensions. Inch dimensions are approximate conversions from millimeters. Dimensions without tolerances are for reference.

Notes:

Kinetix MPF Food-grade Servo Motors

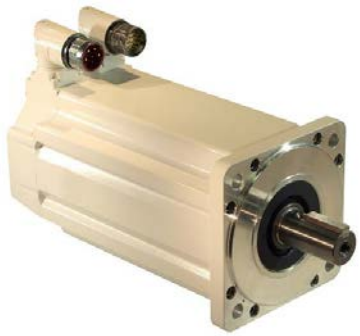

Kinetix MPF servo motors combine the characteristics of the Kinetix MPL servo motors with features specifically designed to meet the unique needs of many food and beverage applications. These high-performance servo motors address the challenges of food environments by incorporating food-grade paint and shaft seal, along with noncorrosive fasteners and stainless steel shaft. For meat and poultry applications, and for applications with high pressure wash and caustic chemicals, the Kinetix MPS stainless-steel servo motors are recommended.

Kinetix MPF Servo Motor Features

Attribute	Value
Main characteristics	• Configurable winding options, brakes, and encoder feedback • Hiperface encoder protocol • Low rotor inertia
Features	• Food-grade epoxy coated • 200V and 400V-class windings • Single-turn and multi-turn absolute feedback • Shaft-end threaded hole • SpeedTec DIN connectors, rotates 180° • Standard IEC 72-1 mounting dimensions
Motor type	Brushless AC synchronous servo motors
Environmental rating	• IP66/IP67 with shaft seal (standard) and use of Rockwell Automation factory-delivered Kinetix 2090 cables • Food grade grease on shaft seal
Certifications	Kinetix MPF rotary motors are UL Recognized components to applicable UL and CSA standards. CE marked for all applicable directives. Refer to rok.auto/certifications for the Product Certifications website.
Continuous stall torque	1.6…19.4 N•m (14…172 lb•in)
Peak stall torque	3.61…48.6 N•m (32…430 lb•in)
Rated speed	Up to 5000 rpm
Motor rated output	0.73…4.1 kW
Compatible servo drives	• Kinetix 5500 (1) • Kinetix 5700 • Kinetix 6200/6500 • Kinetix 6000 • Kinetix 300/350 • Kinetix 2000 • ArmorKinetix DSD
Compatible servo cables	• 2090-CxxM7*xx* cables • 2090-CSBM1P7-14AF*xx* (PUR) cables • 2090-CFBM7S7-CDAF*xx* (PUR) cables
Typical applications	• Food packaging • Volumetric filling • Form, fill, seal • Food handling • For meat and poultry applications, the Kinetix MPS stainless-steel motors are recommended

(1) Requires the 2198-H2DCK Hiperface-to-DSL feedback converter kit. Kinetix MPF (200V-class) servo motors require the 2198-H2DCK (series B or later) converter kit.

Catalog Numbers - Kinetix MPF Servo Motors

Catalog numbers consist of various characters, each of which identifies a specific option for that component. Use the catalog numbering table chart below to understand the configuration of your motor. For questions regarding product availability, contact your Allen-Bradley distributor.

MP F - x xx xx x - x J 7 x B A

Factory Options
A = Standard

Mounting Flange
B = IEC metric (oversized), free mounting holes (type FF)

Brake
2 = No brake
4 = 24V DC holding brake

Connectors
7 = Circular (SpeedTec) DIN connector, right angle, 180° rotatable

Enclosure/Shaft Key
J = IP66/IP67 housing/Keyed shaft

Feedback
M = 1024 sin/cos, absolute multi-turn encoder (Hiperface protocol)
S = 1024 sin/cos, absolute single-turn encoder (Hiperface protocol)

Rated Speed (1)
F = 3000 rpm
H = 3500 rpm
K = 4000 rpm
P = 5000 rpm

Magnet Stack Length (1)
10 = 25.4 mm (1.0 in.)
20 = 50.8 mm (2.0 in.)
30 = 76.2 mm (3.0 in.)
40 = 101.6 mm (4.0 in.)
60 = 152.4 mm (6.0 in.)

Frame Size
3 = 100 mm
4 = 115 mm
45 = 130 mm
5 = 165 mm

Voltage Class
A = 200V
B = 400V

Series Type
F = Food grade enclosure (including shaft seal)

Series
MP = Premium permanent magnet rotary servo motor

(1) Not all combinations are available. Only the configurations for rated speed and magnet stack length, as listed in Kinetix MPF Servo Motor (200V-class) Performance Specifications on page 118 and Kinetix MPF Servo Motor (400V-class) Performance Specifications on page 119, are available. Use Motion Analyzer software to size and select motors for your application.

Kinetix MPF Servo Motor High-resolution Encoders

Kinetix MPF servo motors are available with high performance encoders with a choice of single-turn (-S) or multi-turn (-M) high resolution feedback:

- 1024 sin/cos cycles per revolution for up to 21-bit resolution (2,097,152 counts per revolution) -M and -S (MPF-A/B3*xx*, MPF-A/B4*xx*, MPF-A/B45*xx*, and MPF-A/B5*xx* motors).
- Single-turn encoder provides high-resolution absolute position feedback within one turn.
- Multi-turn encoder provides high-resolution absolute position feedback within 4096 turns. The electromechanical design does not require a battery.

Motor Connector/Cable Compatibility

Kinetix MPF servo motors are equipped with SpeedTec DIN connectors.

SpeedTec DIN Connectors

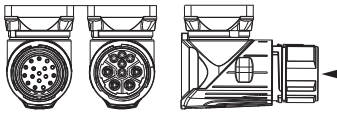

- MPF-A/B*xxx* motors
- Receives M4 and M7 cable plugs (O-ring required for M4)
- Attach M7 cable plug with one-quarter turn

SpeedTec DIN (M7) Cable Plug

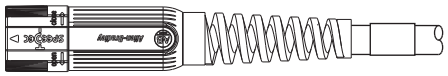

- 2090-CFBM7DF-CEAA*xx* (standard, non-flex) flying-lead, feedback cables
- 2090-CFBM7DD-CEAA*xx* (standard, non-flex) drive-end connector, feedback cables
- 2090-CFBM7DF-CEAF*xx* (continuous-flex) flying-lead, feedback cables
- 2090-CFBM7DD-CEAF*xx* (continuous-flex) drive-end connector, feedback cables
- 2090-CFBM7DF-CDAF*xx* (continuous-flex) flying-lead, feedback cables

- 2090-CPWM7DF-*xx*AA*xx* (standard, non-flex) power-only cables
- 2090-CPBM7DF-*xx*AA*xx* (standard, non-flex) power/brake cables
- 2090-CPWM7DF-*xx*AF*xx* (continuous-flex) power-only cables
- 2090-CPBM7DF-*xx*AF*xx* (continuous-flex) power/brake cables
- 2090-CPBM7DF-*xx*AF*xx* (continuous-flex) power/brake cables



2090-CSBM1P7-14AF*xx* ArmorKinetix motor power/feedback cable

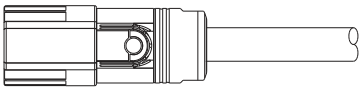

2090-CFBM7S7-CDAF*xx* ArmorKinetix feedback cable

Kinetix MPF Servo Motor Options

Kinetix MPF servo motors are available with these options:

- 24V DC holding brake.
- The positive air-pressure kit (catalog number MPF-7-AIR-PURGE) is mounted on the feedback connector to provide positive air pressure to further reduce the chance of contamination inside the motor.

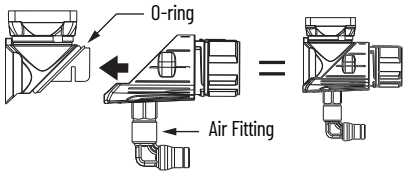

- Shaft seal kits are available for field replacement. Shaft seals are made of PTFE and the kit includes a lubricant to reduce wear.

IMPORTANT Shaft seals are subject to wear and require periodic inspection and replacement. Replacement is recommended every 3 months, not to exceed 12 months, depending on use.

Shaft Seal Kit Catalog Numbers

Motor Cat. No.	Shaft Seal Kit Cat. No.
MPF-A3*xx* and MPF-B3*xx*	MPF-SST-A3B3
MPF-A4*xx* and MPF-B4*xx*	MPF-SST-A4B4
MPF-A45*xx* and MPF-B45*xx*	MPF-SST-A45B45
MPF-A5*xx* and MPF-B5*xx*	MPF-SST-F165

Refer to the Kinetix MPF Food-grade Servo Motor Installation Instructions, publication MP-IN004, for motor accessory information.

Technical Specifications - Kinetix MPF Servo Motors

Kinetix MPF Servo Motor (200V-class) Performance Specifications

Motor Cat. No.	Rated Speed rpm	Maximum Speed rpm	Continuous Stall Torque N•m (lb•in)	Peak Stall Torque N•m (lb•in)	Motor Rated Output kW	Rotor Inertia (1) kg-m^2 (lb•in•s^2)	Motor Weight, approx (1) kg (lb)
MPF-A310P	4750	5000	1.58 (14)	3.61 (32)	0.73	0.000044 (0.00039)	2.8 (6.1)
MPF-A320P	4750	5000	3.05 (27)	7.91 (70)	1.3	0.000078 (0.00069)	3.8 (8.3)
MPF-A320H	3350	3500	3.05 (27)	7.91 (70)	1.0		
MPF-A330P	5000	5000	4.18 (37)	11.1 (98)	1.6	0.00012 (0.0010)	4.7 (10)
MPF-A430P	5000	5000	5.99 (53)	19.8 (175)	1.9	0.00038 (0.0033)	5.6 (12)
MPF-A430H	3500	3500	6.21 (55)	19.8 (175)	1.8		
MPF-A4530K	4000	4000	8.13 (72)	20.3 (180)	2.3	0.00040 (0.0036)	7.4 (16)
MPF-A4540F	3000	3000	10.2 (90)	27.1 (240)	2.5	0.00052 (0.0046)	8.7 (19)
MPF-A540K	4000	4000	19.4 (172)	48.6 (430)	4.1	0.00147 (0.013)	16 (35)

(1) Refer to Kinetix MPF Servo Motor Brake Specifications on page 119 for brake rotor inertia and brake motor weight.

Kinetix MPF Servo Motor (400V-class) Performance Specifications

Motor Cat. No.	Rated Speed rpm	Maximum Speed rpm	Continuous Stall Torque N•m (lb•in)	Peak Stall Torque N•m (lb•in)	Motor Rated Output kW	Rotor Inertia (1) kg-m^2 (lb•in•s^2)	Motor Weight, approx (1) kg (lb)
MPF-B310P	5000	5000	1.58 (14)	3.61 (32)	0.77	0.000044 (0.00039)	2.8 (6.1)
MPF-B320P	5000	5000	3.05 (27)	7.91 (70)	1.5	0.000078 (0.00069)	3.8 (8.3)
MPF-B330P	5000	5000	4.18 (37)	11.1 (98)	1.6	0.00012 (0.0010)	4.7 (10)
MPF-B430P	5000	5000	6.55 (58)	19.8 (175)	2.0	0.00038 (0.0033)	5.6 (12)
MPF-B4530K	4000	4000	8.25 (73)	20.3 (180)	2.4	0.00040 (0.0036)	7.4 (16)
MPF-B4540F	3000	3000	10.2 (90)	27.1 (240)	2.5	0.00052 (0.0046)	8.7 (19)
MPF-B540K	4000	4000	19.4 (172)	48.6 (430)	4.1	0.00147 (0.013)	16 (35)
MPF-B560F	3000	3000	26.8 (237)	67.8 (600)	4.3	0.00227 (.023)	22.8 (50.13)

(1) Refer to Kinetix MPF Servo Motor Brake Specifications on page 119 for brake rotor inertia and brake motor weight.

Kinetix MPF Servo Motor Brake Specifications

Motor Cat. No.	Backlash, max (brake engaged) arc minutes	Holding Torque N•m (lb•in)	Coil Current at 24V DC A	Brake Response Time			Brake Rotor Inertia kg-m^2 (lb•in•s^2)	Brake Motor Weight, approx kg (lb)
				Release ms	Engage (1)			
					MOV ms	Diode ms		
MPF-A/B310	45	4.18 (37)	0.45…0.55	50	20	110	0.000057 (0.00050)	3.8 (8.3)
MPF-A/B320							0.000092 (0.00081)	4.7 (10)
MPF-A/B330							0.00013 (0.0011)	5.7 (13)
MPF-A/B430	37	10.2 (90)	0.576…0.704	110	25	160	0.00042 (0.0038)	7.4 (16)
MPF-A/B4530							0.00044 (0.0039)	9.2 (20)
MPF-A/B4540							0.00056 (0.0050)	11 (24)
MPF-A/B540	25	28.3 (250)	1.05…1.28	70	50	250	0.00157 (0.0139)	19 (41)
MPF-B560F								

(1) By using an arc suppression device in external control circuit.

Kinetix MPF Servo Motor Load Force Ratings

Kinetix MPF servo motors are capable of operating with the maximum radial or maximum axial shaft loads listed in the following tables. Radial loads listed are applied in the middle of the shaft extension. The tables below represent an L_{10} bearing fatigue life of 20,000 hours. This 20,000-hour life does not account for possible application-specific life reduction that can occur due to bearing grease contamination from external sources. Maximum operating speed is limited by motor winding.

Load Forces on Shaft

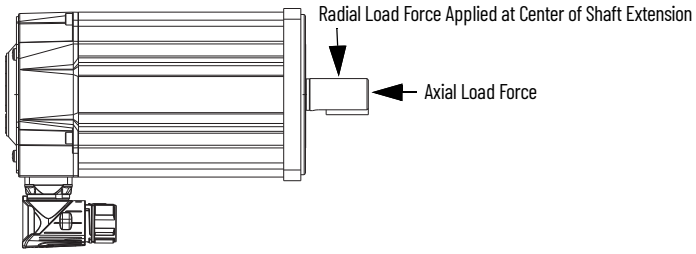

Radial Load Force Ratings

Motor Cat. No.	500 rpm kg (lb)	1000 rpm kg (lb)	2000 rpm kg (lb)	3000 rpm kg (lb)	3500 rpm kg (lb)	4000 rpm kg (lb)	5000 rpm kg (lb)
MPF-A/B310	78 (172)	62 (137)	49 (108)	–	40 (88)	–	36 (79)
MPF-A/B320	87 (192)	69 (152)	55 (121)	–	45 (99)	–	40 (88)
MPF-A/B330	–	74 (163)	59 (130)	–	49 (108)	–	43 (95)
MPF-A/B430	106 (234)	84 (185)	67 (148)	–	55 (121)	–	49 (108)
MPF-A/B4530	133 (293)	105 (232)	84 (185)	73 (161)	–	66 (146)	–
MPF-A/B4540	140 (309)	111 (245)	89 (196)	77 (170)	–	–	–
MPF-A/B540	–	143 (316)	114 (251)	99 (219)	–	90 (199)	–
MPF-B560	–	153 (338)	121 (268)	106 (234)	–	–	–

Axial Load Force Ratings (maximum radial load)

Motor Cat. No.	500 rpm kg (lb)	1000 rpm kg (lb)	2000 rpm kg (lb)	3000 rpm kg (lb)	3500 rpm kg (lb)	4000 rpm kg (lb)	5000 rpm kg (lb)
MPF-A/B310	30 (66)	23 (51)	16 (35)	–	13 (29)	–	11 (24)
MPF-A/B320	34 (75)	25 (55)	19 (42)	–	15 (33)	–	13 (29)
MPF-A/B330	–	27 (60)	20 (44)	–	16 (35)	–	13 (29)
MPF-A/B430	52 (115)	39 (86)	29 (64)	–	22 (49)	–	19 (42)
MPF-A/B4530	45 (99)	34 (75)	25 (55)	21 (46)	–	19 (42)	–
MPF-A/B4540	49 (108)	36 (79)	27 (60)	22 (49)	–	–	–
MPF-A/B540	–	48 (107)	35 (79)	30 (66)	–	26 (58)	–
MPF-B560	–	52 (115)	43 (95)	32 (71)	–	–	–

Axial Load Force Ratings (zero radial load)

Motor Cat. No.	500 rpm kg (lb)	1000 rpm kg (lb)	2000 rpm kg (lb)	3000 rpm kg (lb)	3500 rpm kg (lb)	4000 rpm kg (lb)	5000 rpm kg (lb)
MPF-A/B310	49 (108)	36 (79)	27 (60)	–	21 (46)	–	18 (40)
MPF-A/B320	49 (108)	36 (79)	27 (60)	–	21 (46)	–	18 (40)
MPF-A/B330	–	36 (79)	27 (60)	–	21 (46)	–	18 (40)
MPF-A/B430	69 (152)	51 (112)	38 (84)	–	30 (66)	–	25 (55)
MPF-A/B4530	69 (152)	51 (112)	38 (84)	31 (68)	–	28 (62)	–
MPF-A/B4540	69 (152)	51 (112)	38 (84)	31 (68)	–	–	–
MPF-A/B540	–	67 (149)	49 (109)	41 (92)	–	36 (81)	–
MPF-B560	–	67 (149)	49 (109)	41 (92)	–	–	–

Dimensions - Kinetix MPF Servo Motors

MPF-A/B3*xx*, MPF-A/B4*xx*, MPF-A/B45*xx*, MPF-A/B5*xx* Motor Dimensions

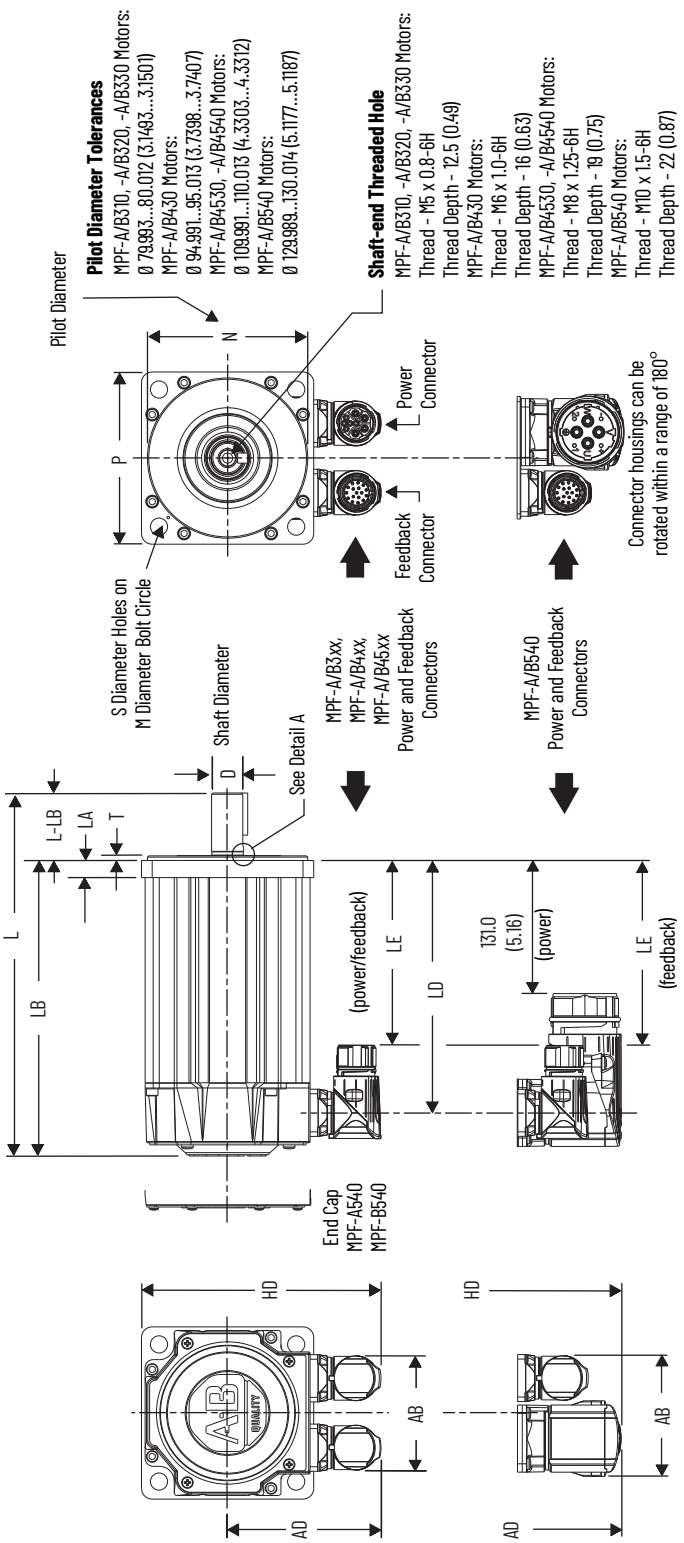

Shaft Seal
Refer to page 118 for Kinetix MPF motor shaft-seal kit information.

Shaft, Pilot, and Keyway Tolerances	MPF-A/B3xx	MPF-A/B4xx	MPF-A/B45xx	MPF-A/B540
Shaft Runout (T.I.R.)	0.035 (0.0014)	0.04 (0.0016)	0.04 (0.0016)	0.04 (0.0016)
Pilot Eccentricity (T.I.R.)	0.08 (0.0031)	0.08 (0.0031)	0.10 (0.0039)	0.10 (0.0039)
Max Face Runout (T.I.R.)	0.08 (0.0031)	0.08 (0.0031)	0.10 (0.0039)	0.10 (0.0039)
Keyway Depth (GE)	3.00...3.10 (0.118...0.122)	3.50...3.60 (0.138...0.142)	4.00...4.20 (0.158...0.165)	4.00...4.20 (0.158...0.165)
Keyway Width (F)	4.97...5.00 (0.196...0.197)	5.97...6.00 (0.235...0.236)	7.96...8.00 (0.314...0.315)	7.964...8.000 (0.3135...0.3150)

MPF-A/B3*xx*, MPF-A/B4*xx*, MPF-A/B45*xx*, MPF-A/B5*xx* Motor Dimensions

Motor Cat. No.	AB mm (in.)	AD mm (in.)	HD mm (in.)	T mm (in.)	LA mm (in.)	LD (1) mm (in.)	LE (1) mm (in.)	L (1) mm (in.)	LB (1) mm (in.)	L-LB (2) mm (in.)	D (3) mm (in.)	M mm (in.)	S (4) mm (in.)	N (3) mm (in.)	P mm (in.)	GE (3) mm (in.)	F (3) mm (in.)
MPF-A/B310	66.0 (2.60)	87.25 (3.43)	133.4 (5.25)	2.74 (0.11)	9.91 (0.39)	102.0 (4.03)	62.0 (2.45)	168.0 (6.62)	128.0 (5.04)	40.0 (1.57)	16.0 (0.629)	100.0 (3.94)	7.0 (0.283)	80.0 (3.15)	92.39 (3.64)	3.0 (0.118)	5.0 (0.197)
MPF-A/B320						128.0 (5.03)	88.0 (3.45)	193.0 (7.62)	153.0 (6.04)								
MPF-A/B330						153.0 (6.03)	113.0 (4.45)	219.0 (8.62)	179.0 (7.04)								
MPF-A/B430	67.7 (2.66)	90.9 (3.58)	142.0 (5.59)	2.74 (0.11)	10.16 (0.40)	150.0 (5.89)	110.0 (4.31)	215.0 (8.48)	175.0 (6.90)	40.0 (1.57)	19.0 (0.748)	115.0 (4.53)	10.0 (0.401)	95.0 (3.74)	102.1 (4.02)	3.5 (0.138)	6.0 (0.236)
MPF-A/B4530	67.7 (2.66)	98.6 (3.88)	157.6 (6.20)	2.74 (0.11)	12.19 (0.48)	153.0 (6.02)	113.0 (4.44)	229.0 (9.0)	179.0 (7.03)	50.0 (1.97)	24.0 (0.945)	130.0 (5.12)	10.0 (0.401)	110.0 (4.33)	118.1 (4.65)	4.0 (0.158)	8.0 (0.315)
MPF-A/B4540						178.0 (7.02)	138.0 (5.44)	254.0 (10.0)	204.0 (8.03)								
MPF-A/B540	71.2 (2.80)	136.4 (5.37)	209.0 (8.23)	3.12 (0.12)	13.97 (0.55)	202.0 (7.95)	162.0 (6.38)	287.0 (11.30)	227.0 (8.92)	60.0 (2.36)	28.0 (1.102)	165.0 (6.50)	12.0 (0.481)	130.0 (5.12)	145.3 (5.72)	4.0 (0.158)	8.0 (0.315)
MPF-B560						304.0 (11.98)	233.0 (9.18)	389.0 (15.31)	329.0 (12.95)								

(1) If ordering an MPF-A/B310, MPF-A/B320, or MPF-A/B330 motor with brake, add 35 mm (1.38 in.) to dimensions L, LB, LD, and LE.
If ordering an MPF-A/B430 motor with brake, add 48 mm (1.89 in.) to dimensions L, LB, LD, and LE.
If ordering an MPF-A/B4530 or MPF-A/B4540 motor with brake, add 23 mm (0.90 in.) to dimensions L, LB, LD, and LE.
If ordering an MPF-A/B540 motor with brake, add 51 mm (2.0 in.) to dimensions L, LB, LD, and LE.
(2) Tolerance for this dimension is ±0.7 mm (±0.028 in.).
(3) For keyway, shaft diameter, and pilot diameter tolerances, refer to page 121.
(4) Tolerance for this dimension is: MPF-A/B3*xx*, MPF-A/B4*xx*, or MPF-A/B45*xx* +0.36 mm (±0.007 in.) and MPF-A/B5*xx* +0.43 mm (±0.008 in.).

Motors are designed to metric dimensions. Inch dimensions are approximate conversions from millimeters. Dimensions without tolerances are for reference.

Kinetix MPS Stainless-steel Servo Motors



Kinetix MPS servo motors are specifically designed to meet the unique needs of washdown environments. These motors are specifically designed for high-pressure, highly caustic washdown environments. The Kinetix MPS servo motors extend the wide range of Allen-Bradley servo motors into new applications on food, beverage, brewing, dairy, pharmaceutical, and health and beauty manufacturing equipment. For EHEDG type of hygienic requirements, we recommend the Kinetix VPH hygienic stainless-steel servo motors.

Kinetix MPS Stainless-steel Motor Features

Attribute	Value
Main characteristics	• Specifically designed for hygienic environments for use with high pressure, highly caustic washdown applications • Hiperface encoder protocol • Low rotor inertia
Features	• Smooth, passivated 300 series stainless-steel cylindrical exterior • Certified and listed to NSF/ANSI Standard 169 • 200V and 400V-class windings • Single-turn and multi-turn absolute feedback options • Shaft-end threaded hole • Cable extensions, 3 m (9.8 ft) • Standard IEC 72-1 mounting dimensions
Motor type	Brushless AC synchronous servo motors
Environmental rating	• IP66/IP67 with shaft seal (standard) and use of Rockwell Automation factory-delivered Kinetix 2090 cables • IP69K for 1200 psi washdown (1)
Certifications	Kinetix MPS rotary motors are UL Recognized components to applicable UL and CSA standards. CE marked for all applicable directives. Refer to rok.auto/certifications for the Product Certifications website.
Continuous stall torque	3.6…21.5 N•m (32…190 lb•in)
Peak stall torque	11.1…98 N•m (67.8…600 lb•in)
Rated speed	3000 and 5000 rpm
Motor rated output	1.3…3.5 kW
Compatible servo drives	• Kinetix 5500 (2) • Kinetix 5700 • Kinetix 6200/6500 • Kinetix 6000 • Kinetix 300/350 • Kinetix 2000 • ArmorKinetix DSD
Compatible servo cables	• 2090-C*xx*M7*xx* cables • 2090-CSBM1P7-14AF*xx* (PUR) cables • 2090-CFBM7S7-CDAF*xx* (PUR) cables
Typical applications	• Meat and poultry • Food slicing and filling • Raw food handling • Processing • Life science • Consumer products

(1) The cable connectors are rated IP66/IP67 and are not designed to withstand high-pressure washdown or washdown with aggressive cleaning compounds. Position connectors away from direct exposure to cleaning processes, for example, within washdown-rated conduit or junction boxes.
(2) Requires the 2198-H2DCK Hiperface-to-DSL feedback converter kit. Kinetix MPS (200V-class) servo motors require the 2198-H2DCK (series B or later) converter kit.

Catalog Numbers - Kinetix MPS Stainless-steel Servo Motors

Catalog numbers consist of various characters, each of which identifies a specific option for that component. Use the catalog numbering table chart below to understand the configuration of your motor. For questions regarding product availability, contact your Allen-Bradley distributor.

MP S - x xx xx x - x J 5 x D A

Factory Options
A = Standard

Mounting Flange
D = IEC metric, tapped mounting holes (type FT)

Brake
2 = No brake
4 = 24V DC holding brake

Connectors (1)
5 = Cables with circular DIN (SpeedTec) connector

Enclosure/Shaft Key/Shaft Seal
J = IP66/IP67/IP69K housing/Shaft key/Shaft seal

Feedback
M = 1024 sin/cos, absolute multi-turn encoder (Hiperface protocol)
S = 1024 sin/cos, absolute single-turn encoder (Hiperface protocol)

Rated Speed (2)
F = 3000 rpm
P = 5000 rpm

Magnet Stack Length (2)
30 = 76.2 mm (3.0 in.)
40 = 101.6 mm (4.0 in.)
60 = 152.4 mm (6.0 in.)

Frame Size
3 = 100 mm
45 = 130 mm
5 = 165 mm

Voltage Class
A = 200V
B = 400V

Series Type
S = Stainless steel

Series
MP = Premium permanent magnet rotary servo motor

(1) The motor has 3 m (9.8 ft) cables with nickel-plated connector extensions.

IMPORTANT The connectors are O-ring sealed, but not designed to withstand direct high-pressure washdown with aggressive cleaning compounds. The 3 m (9.8 ft) cables are provided so the connectors can be positioned in an area away from direct exposure to the cleaning process, such as within washdown-rated conduit or junction boxes.

(2) Not all combinations are available. Only the configurations for rated speed and magnet stack length, as listed in Kinetix MPS Servo Motor (200V-class) Performance Specifications on page 126 and Kinetix MPS Servo Motor (400V-class) Performance Specifications on page 126, are available. Use Motion Analyzer software to size and select motors for your application.

Kinetix MPS Stainless-steel Motor High-resolution Encoders

Kinetix MPS servo motors are available with high-performance encoders with a choice of single-turn (-S) or multi-turn (-M) high-resolution feedback:

- 1024 sin/cos cycles per revolution for up to 21-bit resolution (2,097,152 counts per revolution) -M and -S (MPS-A/B3*xx*, MPS-A/B45*xx*, and MPS-B5*xx* motors).
- Single-turn encoder provides high-resolution absolute position feedback within one turn.
- Multi-turn encoder provides high-resolution absolute position feedback within 4096 turns. The electromechanical design does not require a battery.

Motor Connector/Cable Compatibility

Kinetix MPS servo motors are equipped with SpeedTec DIN connectors.

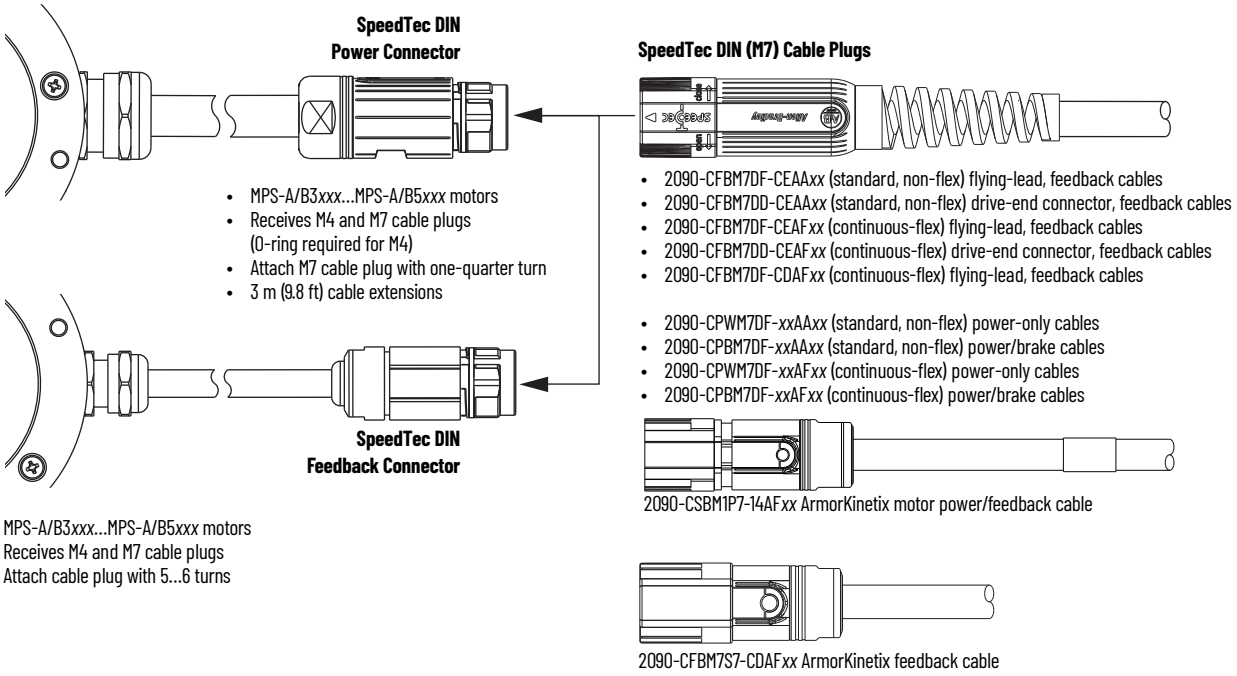

Kinetix MPS Stainless-steel Motor Options

Kinetix MPS servo motors are available with these options:

- 24V DC holding brake.
- The positive air-pressure accessory kit (catalog number MPS-AIR-PURGE) is mounted to the rear cover of the motor to provide positive air pressure and further reduce the chance of contamination inside the motor. No special tool is required for installation and removal.
- Shaft seal kits (with slinger) are available for field replacement. Shaft seals are made of PTFE and kits include a lubricant to reduce wear.

IMPORTANT Shaft seals are subject to wear and require periodic inspection and replacement. Replacement is recommended every 3 months, not to exceed 12 months, depending on use.

Shaft Seal Kit Catalog Numbers

Motor Cat. No.	Shaft Seal Kit Cat. No.
MPS-A3*xx* and MPS-B3*xx*	MPS-SST-A3B3
MPS-A45*xx* and MPS-B45*xx*	MPS-SST-A45B45
MPS-B5*xx*	MPS-SST-F165

Refer to the Kinetix MPS Stainless-steel Servo Motor Installation Instructions, publication MP-IN005, for more information.

Technical Specifications - Kinetix MPS Stainless-steel Servo Motors

Kinetix MPS Servo Motor (200V-class) Performance Specifications

Motor Cat. No.	Rated Speed rpm	Maximum Speed rpm	Continuous Stall Torque N•m (lb•in)	Peak Stall Torque N•m (lb•in)	Motor Rated Output kW	Rotor Inertia (1) kg-m^2 (lb•in•s^2)	Motor Weight, approx (1) kg (lb)
MPS-A330P	5000	5000	3.6 (32)	11.1 (98)	1.3	0.00012 (0.0010)	7.4 (16.2)
MPS-A4540F	3000	3000	8.1 (72)	27.1 (240)	1.4	0.00052 (0.0046)	13 (28.5)

(1) Refer to Kinetix MPS Servo Motor Brake Specifications on page 126 for brake rotor inertia and brake motor weight.

Kinetix MPS Servo Motor (400V-class) Performance Specifications

Motor Cat. No.	Rated Speed rpm	Maximum Speed rpm	Continuous Stall Torque N•m (lb•in)	Peak Stall Torque N•m (lb•in)	Motor Rated Output kW	Rotor Inertia (1) (2) kg-m^2 (lb•in•s^2)	Motor Weight, approx (1) kg (lb)
MPS-B330P	5000	5000	3.6 (32)	11.1 (98)	1.3	0.00012 (0.0010)	7.4 (16.2)
MPS-B4540F	3000	3000	8.1 (72)	27.1 (240)	1.4	0.00052 (0.0046)	13 (28.5)
MPS-B560F	3000	3000	21.5 (190)	67.8 (600)	3.5	0.00227 (0.0200)	30 (66)

(1) Refer to Kinetix MPS Servo Motor Brake Specifications on page 126 for brake rotor inertia and brake motor weight.
(2) Rotor inertia can vary slightly depending on feedback.

Kinetix MPS Servo Motor Brake Specifications

Motor Cat. No.	Backlash, max (brake engaged) arc minutes	Holding Torque N•m (lb•in)	Coil Current at 24V DC A	Brake Response Time			Brake Rotor Inertia kg-m^2 (lb•in•s^2)	Brake Motor Weight, approx kg (lb)
				Release ms	Engage (1)			
					MOV ms	Diode ms		
MPS-A/B330	45	4.18 (37)	0.45…0.55	50	20	110	0.00013 (0.0011)	8.8 (19.3)
MPS-A/B4540	48	10.2 (90)	0.576…0.704	110	25	160	0.00052 (0.0046)	15.4 (34.0)
MPS-B560	25	28.3 (250)	1.05…1.28	70	50	250	0.00227 (0.0200)	32.2 (70.8)

(1) By using an arc suppression device in external control circuit.

Kinetix MPS Stainless-steel Motor Load Force Ratings

Kinetix MPS servo motors are capable of operating with the maximum radial or maximum axial shaft loads listed in the following tables. Radial loads listed are applied in the middle of the shaft extension. The tables starting below represent an L_{10} bearing fatigue life of 20,000 hours. This 20,000-hour life does not account for possible application-specific life reduction that can occur due to bearing grease contamination from external sources. Maximum operating speed is limited by motor winding.

Load Forces on Shaft

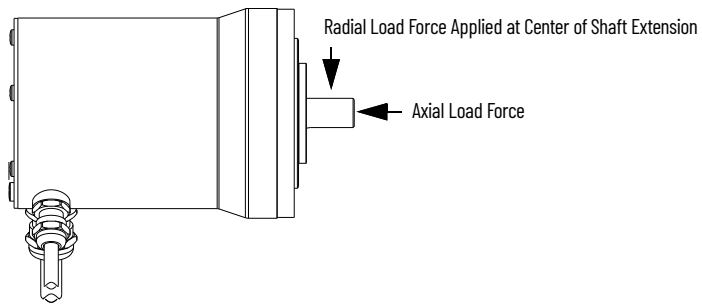

Radial Load Force Ratings

Motor Cat. No.	500 rpm kg (lb)	1000 rpm kg (lb)	2000 rpm kg (lb)	3000 rpm kg (lb)	3500 rpm kg (lb)	4000 rpm kg (lb)	5000 rpm kg (lb)
MPS-A/B330	–	74 (163)	59 (130)	–	49 (108)	–	43 (95)
MPS-A/B4540	140 (309)	111 (245)	89 (195)	77 (170)	–	–	–
MPS-B560	–	154 (338)	122 (268)	106 (234)	–	–	–

Axial Load Force Ratings (maximum radial load)

Motor Cat. No.	500 rpm kg (lb)	1000 rpm kg (lb)	2000 rpm kg (lb)	3000 rpm kg (lb)	3500 rpm kg (lb)	4000 rpm kg (lb)	5000 rpm kg (lb)
MPS-A/B330	–	27 (59)	20 (44)	–	16 (35)	–	13 (29)
MPS-A/B4540	49 (107)	36 (80)	27 (59)	22 (49)	–	–	–
MPS-B560	–	52 (115)	39 (85)	32 (71)	–	–	–

Axial Load Force Ratings (zero radial load)

Motor Cat. No.	500 rpm kg (lb)	1000 rpm kg (lb)	2000 rpm kg (lb)	3000 rpm kg (lb)	3500 rpm kg (lb)	4000 rpm kg (lb)	5000 rpm kg (lb)
MPS-A/B330	–	36 (79)	27 (59)	–	21 (46)	–	18 (40)
MPS-A/B4540	69 (152)	51 (112)	38 (83)	31 (69)	–	–	–
MPS-B560	–	68 (149)	50 (109)	42 (92)	–	–	–

Dimensions - Kinetix MPS Stainless-steel Servo Motors

MPS-A/B330, MPS-A/B4540, MPS-B560 Motor Dimensions

Dimensions are in mm (in.)

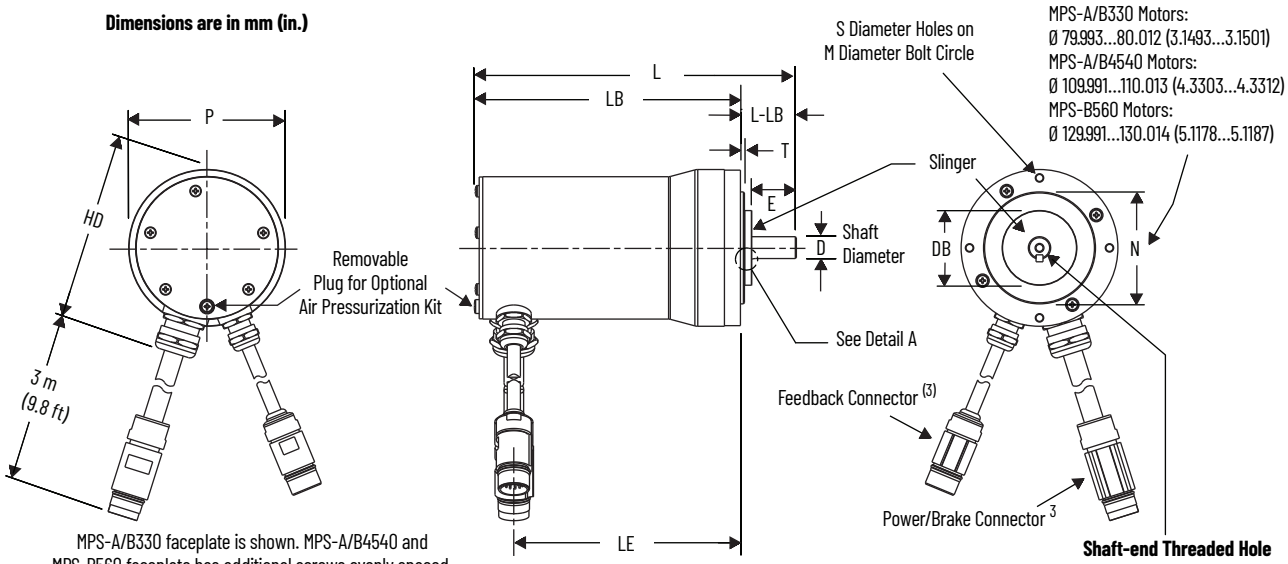

MPS-A/B330 faceplate is shown. MPS-A/B4540 and MPS-B560 faceplate has additional screws evenly spaced.

Pilot Diameter Tolerances
MPS-A/B330 Motors:
Ø 79.993...80.012 (3.1493...3.1501)
MPS-A/B4540 Motors:
Ø 109.991...110.013 (4.3303...4.3312)
MPS-B560 Motors:
Ø 129.991...130.014 (5.1178...5.1187)

Shaft Diameter Tolerances
MPS-A/B330 Motors:
Ø 15.997...16.008 (0.6298...0.6301)
MPS-A/B4540 Motors:
Ø 23.996...24.009 (0.9448...0.9451)
MPS-B560 Motors:
Ø 27.996...28.009 (1.1022...1.1027)

Shaft-end Threaded Hole
MPS-A/B330 Motors:
Thread - M5 x 0.8-6H
Thread Depth - 12.5 (0.49)
MPS-A/B4540 Motors:
Thread - M8 x 1.25-6H
Thread Depth - 19 (0.75)
MPS-B560 Motors:
Thread - M10 x 1.5-6H
Thread Depth - 22 (0.87)

Detail A



MPS-A/B330 Motors:
Ø 16.891...16.896 (0.6650...0.6652)
MPS-A/B4540 Motors:
Ø 24.94 ±0.05 (0.982 ±0.002)
MPS-A/B560 Motors:
Ø 29.92 ±0.05 (1.178 ±0.002)

Shaft Detail with Key

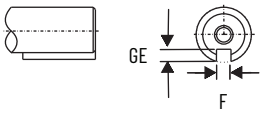

MPS-A/B330 = 5 x 5 x 25 Key
MPS-A/B4540 = 8 x 7 x 32 Key
MPS-B560 = 8 x 7 x 40 Key

Shaft Seal (with slinger)
Refer to page 125 for Kinetix MPS motor shaft-seal kit information.

Shaft, Pilot, and Keyway Tolerances	MPS-A/B330	MPS-A/B4540	MPS-B560
Shaft Runout (T.I.R.)	0.035 (0.0014)	0.04 (0.0016)	0.04 (0.0016)
Pilot Eccentricity (T.I.R.)	0.08 (0.0031)	0.10 (0.0039)	0.10 (0.0039)
Max Face Runout (T.I.R.)	0.08 (0.0031)	0.10 (0.0039)	0.10 (0.0039)
Keyway Depth (GE)	3.00...3.10 (0.118...0.122)	4.00...4.20 (0.158...0.165)	4.00...4.20 (0.158...0.165)
Keyway Width (F)	4.97...5.00 (0.196...0.197)	7.96...8.00 (0.314...0.315)	7.96...8.00 (0.314...0.315)

Motor Cat. No.	HD mm (in.)	T mm (in.)	E mm (in.)	LE (1) mm (in.)	L (1) mm (in.)	LB (1) mm (in.)	L-LB (2) mm (in.)	D mm (in.)	DB mm (in.)	M mm (in.)	S mm (in.)	N mm (in.)	P mm (in.)	GE mm (in.)	F mm (in.)
MPS-A/B330	135 (5.31)	2.87 (0.113)	32.1 (1.26)	162 (6.38)	230 (9.05)	190 (7.49)	40.0 (1.57)	16.0 (0.63)	50.8 (2.0)	100 (3.94)	M6x1.0-6H Depth: 7.0 (0.28)	80.0 (3.15)	112 (4.41)	3.0 (0.118)	5.0 (0.197)
MPS-A/B4540	164 (6.46)	3.38 (0.133)	41.4 (1.63)	185 (7.30)	266 (10.45)	216 (8.48)	50.0 (1.97)	24.0 (0.945)	70.0 (2.75)	130 (5.12)	M8x1.25-6H Depth: 9.0 (0.35)	110 (4.33)	143.2 (5.64)	4.0 (0.158)	8.0 (0.315)
MPS-B560	198 (7.79)	3.38 (0.13)	51.52 (2.03)	302 (11.90)	396 (15.60)	336 (13.24)	60.0 (2.36)	28.0 (1.10)	82.6 (3.25)	165 (6.49)	M10x1.5-6H Depth: 11.0 (0.43)	130 (5.12)	181 (7.13)	4.0 (0.158)	8.0 (0.315)

(1) If ordering an MPS-A/B330 motor with brake, add 35 mm (1.38 in.) to dimensions L and LB, and 34 mm (1.34 in.) to dimension LE.
If ordering an MPS-A/B4540 motor with brake add 48.5 mm (1.91 in.) to dimensions L, LB, and LE.
(2) Tolerance for this dimension is ±0.7 mm (±0.028 in.).
(3) Specifications for the 3 m (9.8 ft) power and feedback cable leads are identical to those of the 2090-XXNPMF-*xx*S*xx* (power) and 2090-XXNFMF-S*xx* (feedback) cables. Refer to Kinetix Rotary and Linear Motion Cable Specifications Technical Data, publication KNX-TD004, for more information.

Motors are designed to metric dimensions. Inch dimensions are approximate conversions from millimeters. Dimensions without tolerances are for reference.

Kinetix TLP Multi-purpose Servo Motors



Kinetix TLP servo motors, tested and validated for optimal performance with Kinetix 5100 and Kinetix 5300 servo drives, are available with 230V or 480V windings and with or without 24V DC holding brakes. A wide-range of other economical and customizable options are also available.

Kinetix TLP Servo Motor Features

Attribute	Value
Main characteristics	• Developed to match Kinetix 5100 and Kinetix 5300 servo drive for optimal system performance • Metric frame sizes • High torque to size ratio
Features	• 200V and 400V-class windings • 24-bit high-resolution single-turn and multi-turn absolute feedback • Shaft-end threaded hole • Metric mounting, consistent with Kinetix TL and TLY compact servo motors
Motor type	Brushless AC synchronous servo motors
Cables and connectors	• On-motor cables (TLP-x046…TLP-x100 frame sizes) • Military style motor connectors (TLP-A/B115…TLP-A/B235 frame sizes) • Kinetix TLP drive/motor system cables lengths up to 50 m (164 ft) • Build your own cable options with available connector kits
Environmental rating	• IP30 on-motor cable connectors (TLP-x046…TLP-x100 frame sizes) • IP40 motor without shaft seal • IP65 motor with optional shaft seal and use of Rockwell Automation factory-delivered Kinetix 2090 cables
Certifications	Kinetix TLP rotary motors are UL Recognized components to applicable UL and CSA standards. CE marked for all applicable directives. Refer to rok.auto/certifications for the Product Certifications website.
Continuous stall torque	0.160…95.4 N•m (1.42…884 lb•in)
Peak stall torque	0.447…185 N•m (3.96…1634 lb•in)
Rated speed	Up to 3000 rpm
Motor rated output	0.05…15.0 kW (0.067…20.1 Hp)
Compatible servo drives	• Kinetix 5100 • Kinetix 5300
Compatible servo cables	2090-CT*xx-xxxx-xxxxx* Kinetix TLP motor cables
Typical applications	• Packaging • Converting • Material handling • Electronic assembly • Automotive • Robotics • Medical laboratory equipment

Catalog Numbers - Kinetix TLP Servo Motors

Catalog numbers consist of various characters, each of which identifies a specific option for that component. Use the catalog numbering table chart below to understand the configuration of your motor. For questions regarding product availability, contact your Allen-Bradley distributor.

TL P - x xxx -xxx - D x xx x x

Factory Options
A = Standard (without shaft seal)
S = Shaft seal

Brake
2 = No brake
4 = 24V DC holding brake

Connector
A3 = Rectangular connectors with 0.3 m (11.8 in.) on-motor cables
A1 = Rectangular connectors with 1.0 m (39.4 in.) on-motor cables
MC = Military style connectors for TLP-A/B115-*xxx* and TLP-A/B145-*xxx* motors
MD = Military style connectors for TLP-A200-200, TLP-A/B200-300, TLP-A200-350, TLP-A/B200-450, TLP-B200-550, TLP-B200-750
ME = Military style connectors for TLP-A200-550, TLP-A200-750 and TLP-A/B235-*xxx* motors

Shaft Key
J = Shaft key
K = Smooth shaft

Feedback
D = 24-bit absolute single-turn and multi-turn (65,536 revolutions capable) with battery enabled encoder. (1)

Rated Power (2)

005 = 50 W	075 = 750 W	250 = 2.5 kW	750 = 7.5 kW
010 = 100 W	090 = 900 W	300 = 3.0 kW	11K = 11 kW
020 = 200 W	100 = 1.0 kW	350 = 3.5 kW	14K = 14 kW
040 = 400 W	150 = 1.5 kW	450 = 4.5 kW	1 5K = 15 kW
050 = 500 W	200 = 2.0 kW	550 = 5.5 kW	

Frame Size - Bolt Circle Diameter (BCD) (2)

046 = 46 mm	115 = 115 mm
070 = 70 mm	145 = 145 mm
090 = 90 mm	200 = 200 mm
100 = 100 mm	235 = 235 mm

Voltage Class
A = 200V
B = 400V

Series Type
P = Multi-purpose

Series
TL = Kinetix TLP multi-purpose servo motors that are optimized to the ratings of Kinetix 5100 and Kinetix 5300 servo drives.

(1) Multi-turn revolution depends on the system settings and configuration.
(2) Not all combinations are available. Only the configurations for rated power and frame size, as listed in Kinetix TLP Servo Motor (200V-class) Performance Specifications on page 133 are available. Use Motion Analyzer software to size and select motors for your application.

Kinetix TLP Servo Motor High-resolution Encoders

Kinetix TLP servo motors are equipped with 24-bit high-resolution serial encoders that are capable of single-turn and multi-turn operation:

- Single-turn encoder operation (without battery backup) provides high-resolution absolute position feedback within one turn.
- Multi-turn encoder operation (battery required) provides high-resolution absolute position feedback within 65,536 turns. Actual multi-turn revolutions depend on the system settings and configuration.

Motor Connector/Cable Compatibility

TLP-x046...TLP-x100 servo motors are equipped with rectangular connectors.

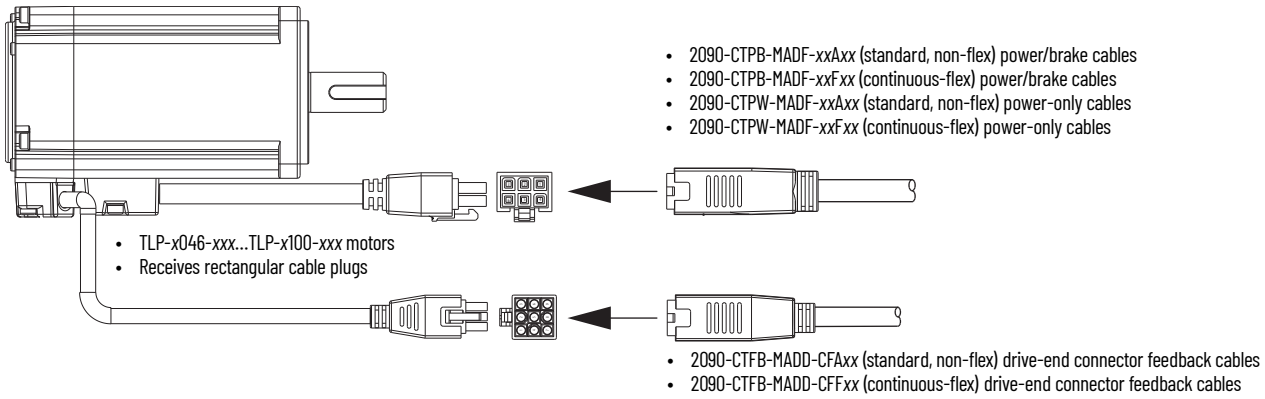

TLP-A/B115...TLP-A/B235 servo motors are equipped with military style connectors.

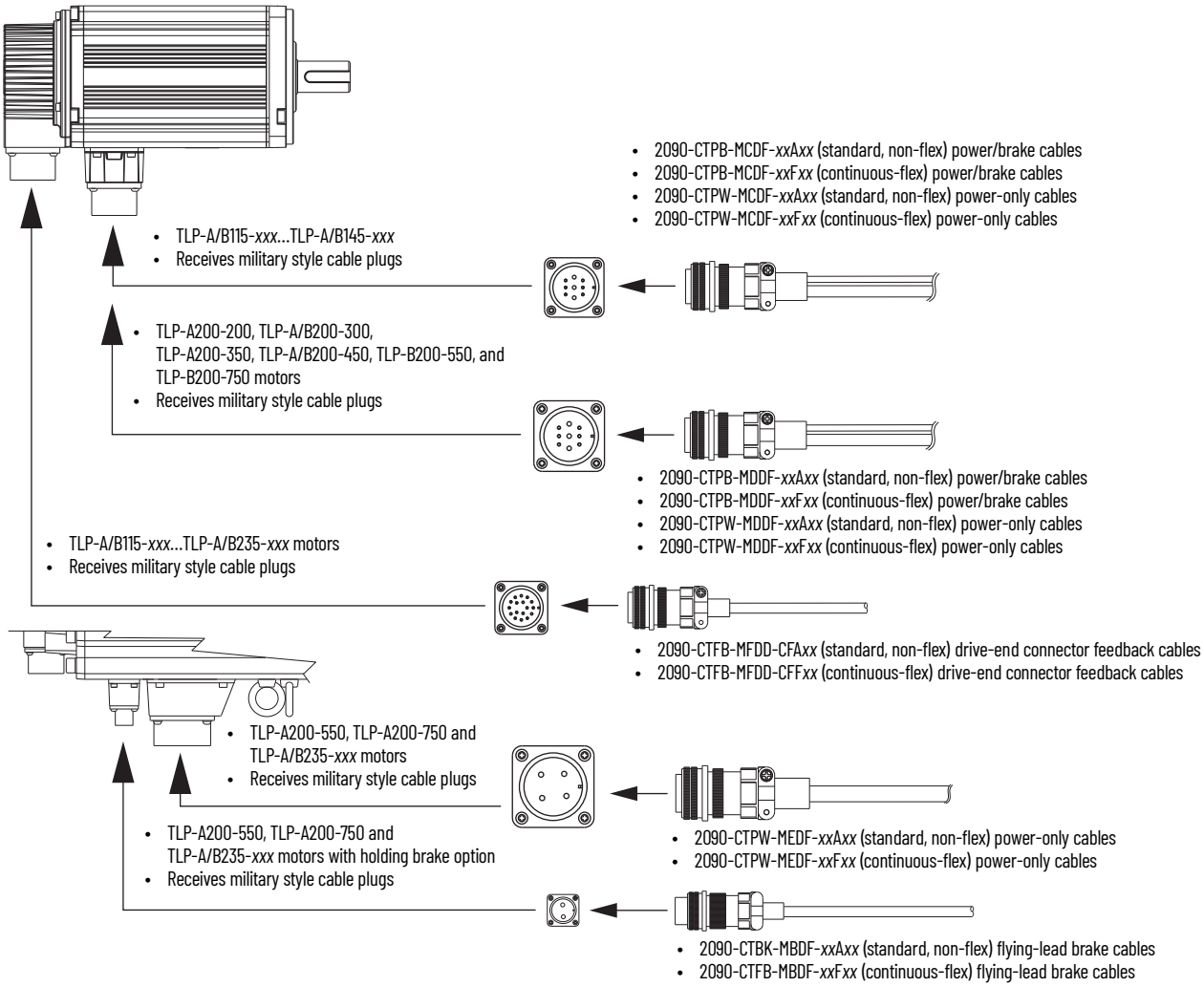

For cable specifications, refer to Kinetix Rotary and Linear Motion Cable Specifications Technical Data, publication KNX-TD004.

Kinetix TLP Servo Motor Options

Kinetix TLP servo motors are available with these options:

- 24V DC holding brake
- Keyed or keyless shaft
- Shaft seal kits are available, as are replacement kits for field installation. A shaft seal provides a barrier that prevents moisture and particles from entering the motor bearings. Shaft seals are made of nitrile and kits and require lubrication to reduce wear.

IMPORTANT Shaft seals are subject to wear and require periodic inspection and replacement. Replacement is recommended every 3 months, not to exceed 12 months, depending on use.

Shaft Seal Kit Selection

Motor Cat. No.	Shaft Seal Kit Cat. No.
TLP-A046	TLP-SSN-F046
TLP-A/B070	TLP-SSN-F070
TLP-A/B090	TLP-SSN-F090
TLP-A100	TLP-SSN-F100
TLP-A/B115	TLP-SSN-F115
TLP-A/B145	TLP-SSN-F145
TLP-A/B200	TLP-SSN-F200
TLP-A/B235	TLP-SSN-F235

See Shaft Seal Kits for Kinetix TLP Servo Motors Installation Instructions, publication 2090-IN044, for instructions on how to install a shaft seal.

Technical Specifications - Kinetix TLP Servo Motors

Kinetix TLP Servo Motor (200V-class) Performance Specifications

Motor Cat. No.	Rated Speed rpm	Maximum Speed rpm	Continuous Stall Torque N•m (lb•in)	Peak Stall Torque N•m (lb•in)	Motor Rated Output kW (Hp)	Rotor Inertia (1) kg-m^2 (lb•in•s^2)	Motor Weight, approx (1) kg (lb)
TLP-A046-005	3000	6000	0.16 (1.42)	0.447 (3.96)	0.05 (0.067)	0.00000384 (0.00003398)	0.45 (0.99)
TLP-A046-010	3000	6000	0.32 (2.83)	1.034 (9.15)	0.10 (0.134)	0.00000627 (0.00005549)	0.60 (1.32)
TLP-A070-020	3000	6000	0.64 (5.66)	2.160 (19.12)	0.20 (0.268)	0.000025 (0.0002212)	1.1 (2.43)
TLP-A070-040	3000	6000	1.27 (11.2)	4.275 (37.84)	0.40 (0.536)	0.000045 (0.0003982)	1.5 (3.31)
TLP-A090-075	3000	6000	2.39 (21.2)	7.505 (66.42)	0.75 (1.005)	0.000151 (0.001336)	3.0 (6.61)
TLP-A100-100	3000	3000	3.18 (28.2)	8.740 (77.36)	1.0 (1.34)	0.000262 (0.002319)	3.8 (8.38)
TLP-A115-100	3000	5000	3.18 (28.2)	8.455 (74.83)	1.0 (1.34)	0.000265 (0.002345)	4.3 (9.48)
TLP-A115-200	3000	5000	6.37 (56.4)	17.48 (154.7)	2.0 (2.68)	0.000445 (0.003938)	6.2 (13.7)
TLP-A145-050	2000	3000	2.39 (21.6)	6.81 (60.27)	0.50 (0.670)	0.000817 (0.00723)	6.8 (15.0)
TLP-A145-090	1000	2000	8.59 (76.0)	20.52 (181.6)	0.90 (1.206)	0.001118 (0.009894)	7.5 (16.5)
TLP-A145-100	2000	3000	4.77 (42.2)	13.30 (117.7)	1.0 (1.34)	0.000841 (0.007442)	7.0 (15.4)
TLP-A145-150	2000	3000	7.16 (63.4)	19.66 (174.0)	1.5 (2.01)	0.001118 (0.009894)	7.5 (16.5)
TLP-A145-250	3000	4500	7.96 (70.5)	24.51 (216.9)	2.5 (3.35)	0.00127 (0.01124)	7.8 (17.2)
TLP-A200-200	2000	3000	9.55 (84.5)	21.85 (193.4)	2.0 (2.68)	0.003468 (0.03069)	13.5 (29.8)
TLP-A200-300	1500	2500	19.10 (169.1)	47.03 (416.3)	3.0 (4.02)	0.005495 (0.04863)	18.5 (40.8)
TLP-A200-350	2000	3000	16.71 (147.9)	43.23 (382.6)	3.5 (4.69)	0.005495 (0.04863)	18.5 (40.8)
TLP-A200-450	1500	3000	28.65 (253.6)	64.04 (566.8)	4.5 (6.03)	0.007775 (0.06881)	23.5 (51.8)
TLP-A200-550	1500	3000	35.01 (309.9)	79.96 (707.7)	5.5 (7.37)	0.009978 (0.0883)	30.5 (67.2)
TLP-A200-750	1500	2500	47.74 (422.5)	104.30 (923.1)	7.5 (10.1)	0.01427 (0.12628)	40.5 (89.3)
TLP-A235-11K	1500	2000	70.0 (619.6)	144.30 (1277)	11.0 (14.7)	0.0338 (0.2991)	56.7 (125)
TLP-A235-15K	1500	2000	95.40 (844.4)	184.57 (1634)	15.0 (20.1)	0.0451 (0.3991)	74.0 (163)

(1) Refer to Kinetix TLP Servo Motor Brake Specifications on page 134 for brake rotor inertia and brake motor weight.

Kinetix TLP Servo Motor (400V-class) Performance Specifications

Motor Cat. No.	Rated Speed rpm	Maximum Speed rpm	Continuous Stall Torque N•m (lb•in)	Peak Stall Torque N•m (lb•in)	Motor Rated Output kW (Hp)	Rotor Inertia (1) kg-m^2 (lb•in•s^2)	Motor Weight, (1) approx kg (lb)
TLP-B070-040	3000	6000	1.27 (11.2)	4.25 (37.6)	0.40 (0.54)	0.000045 (0.0003982)	1.5 (3.3)
TLP-B090-075	3000	6000	2.39 (21.2)	8.05 (71.2)	0.75 (1.01)	0.000151 (0.001336)	3.0 (6.6)
TLP-B115-100	3000	5000	3.18 (28.1)	9.34 (82.6)	1.0 (1.34)	0.000262 (0.002318)	4.3 (9.5)
TLP-B115-200	3000	5000	6.37 (56.4)	19.10 (169.0)	2.0 (2.68)	0.000445 (0.003938)	6.2 (13.7)
TLP-B145-050	2000	3000	2.39 (21.2)	6.93 (61.3)	0.50 (0.67)	0.000817 (0.00723)	6.8 (15.0)
TLP-B145-100	2000	3000	4.77 (42.4)	13.03 (115.3)	1.0 (1.34)	0.000841 (0.007442)	7.0 (15.4)
TLP-B145-150	2000	3000	7.16 (63.4)	20.54 (181.8)	1.5 (2.01)	0.001118 (0.009894)	7.5 (16.5)
TLP-B145-200	2000	3000	9.55 (84.5)	24.40 (216.0)	2.0 (2.68)	0.001459 (0.012911)	7.8 (17.2)
TLP-B145-250	3000	4500	7.96 (70.5)	26.30 (232.8)	2.5 (3.35)	0.00127 (0.01124)	7.8 (17.2)
TLP-B200-300	1500	2500	19.1 (169.0)	47.8 (423.0)	3.0 (4.02)	0.005495 (0.04863)	18.5 (40.7)
TLP-B200-450	1500	3000	28.7 (254.0)	67.6 (598.0)	4.5 (6.03)	0.007775 (0.06881)	23.5 (51.7)
TLP-B200-550	1500	3000	35.0 (310.0)	83.8 (742.0)	5.5 (7.38)	0.009978 (0.0883)	30.5 (67.1)
TLP-B200-750	1500	2500	47.7 (422.0)	101.3 (896.0)	7.5 (10.1)	0.01427 (0.12628)	40.5 (89.1)
TLP-B235-11K	1500	2000	70.0 (620.0)	158.5 (1403)	11.0 (14.8)	0.0338 (0.2991)	56.7 (125)
TLP-B235-14K	1500	2000	89.1 (789.0)	143.6 (1271)	14.0 (18.8)	0.0451 (0.3991)	74.0 (163)

(1) Refer to Kinetix TLP Servo Motor Brake Specifications on page 134 for brake rotor inertia and brake motor weight.

Kinetix TLP Servo Motor Brake Specifications

Motor Cat. No.	Backlash, max (brake engaged) arc minutes	Holding Torque N•m (lb•in)	Coil Current at 24V DC A	Brake Response Time		Brake Rotor Inertia kg-m^2 (lb•in•s^2)	Brake Motor Weight, approx kg (lb)
				Release ms	Engage [1] ms		
TLP-A046-005	180	0.32 (2.83)	0.25	40	80	0.00000446 (0.00003947)	0.65 (1.43)
TLP-A046-010						0.00000689 (0.00006097)	0.80 (1.76)
TLP-A070-020	96	1.27 (11.24)	0.30			0.000028 (0.0002478)	1.5 (3.31)
TLP-A/B070-040						0.000048 (0.0004248)	1.9 (4.19)
TLP-A/B090-075	72	2.39 (21.15)	0.33			0.000166 (0.001469)	3.8 (8.38)
TLP-A100-100		3.18 (28.15)	0.35			0.000267 (0.002363)	5.5 (12.1)
TLP-A/B115-100		6.37 (56.38)	0.81			0.000333 (0.002947)	4.7 (10.4)
TLP-A/B115-200						0.000495 (0.004381)	7.2 (15.9)
TLP-A/B145-050	54	9.55 (84.53)	0.90	50	110	0.000894 (0.007912)	8.2 (18.1)
TLP-A145-090						0.00119 (0.01053)	8.9 (19.6)
TLP-A/B145-100						0.000914 (0.008088)	8.4 (18.5)
TLP-A/B145-150						0.00119 (0.01053)	8.9 (19.6)
TLP-B145-200						0.001588 (0.014053)	9.2 (20.3)
TLP-A/B145-250						0.0014 (0.01239)	9.2 (20.3)
TLP-A200-200	30	16.71 (147.9)	1.3	60	120	0.003786 (0.0335)	17.5 (38.6)
TLP-A/B200-300						0.005706 (0.0505)	22.5 (49.6)
TLP-A200-350						0.005706 (0.0505)	22.5 (49.6)
TLP-A/B200-450		47.74 (422.5)		100	150	0.008065 (0.07137)	29.0 (63.9)
TLP-A/B200-550						0.01027 (0.09088)	36.0 (79.4)
TLP-A/B200-750						0.014555 (0.1288)	46.0 (101)
TLP-A/B235-11K		95.4 (844.4)		150	300	0.03465 (0.3066)	66.2 (146)
TLP-B235-14K						0.04618 (0.4087)	83.0 (183)
TLP-A235-15K							

(1) By using diode and zener diode as arc suppression device in external control circuit.

Kinetix TLP Servo Motor Load Force Ratings

Kinetix TLP servo motors are capable of operating with the maximum radial or maximum axial shaft loads listed in the following tables. Radial loads listed are applied in the middle of the shaft extension. The tables starting below represent an L_{10} bearing fatigue life of 40,000 hours. This 40,000-hour life does not account for possible application-specific life reduction that can occur due to bearing grease contamination from external sources. Maximum operating speed is limited by motor winding.

Load Forces on Shaft

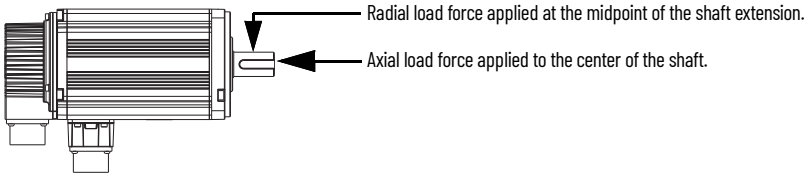

Radial Load Force Ratings (maximum) for Non-brake Motors

Motor Cat. No. (1)	Maximum Speed rpm	RPM														
		500 kgf	750 kgf	1000 kgf	1125 kgf	1250 kgf	1500 kgf	2000 kgf	2250 kgf	2500 kgf	3000 kgf	3375 kgf	3750 kgf	4500 kgf	5000 kgf	6000 kgf
TLP-A046-005-D*xxx2x*	6000	–	–	–	–	–	8.8	–	–	–	7.0	–	–	6.1	–	5.6
TLP-A046-010-D*xxx2x*	6000	–	–	–	–	–	9.7	–	–	–	7.7	–	–	6.8	–	6.1
TLP-A070-020-D*xxx2x*	6000	–	–	–	–	–	22.4	–	–	–	17.8	–	–	15.5	–	14.1
TLP-A070-040-D*xxx2x*	6000	–	–	–	–	–	25	–	–	–	19.9	–	–	17.4	–	15.8
TLP-A090-075-D*xxx2x*	6000	–	–	–	–	–	35.6	–	–	–	28.2	–	–	24.7	–	22.4
TLP-A100-100-D*xxx2x*	3000	–	61.8	–	–	–	49.0	–	42.8	–	38.9	–	–	–	–	–
TLP-A115-100-D*xxx2x*	5000	–	–	–	–	52.9	–	–	–	42	–	–	36.7	–	33.3	–
TLP-A115-200-D*xxx2x*	5000	–	–	–	–	58.1	–	–	–	46.1	–	–	10.3	–	36.6	–
TLP-A145-050-D*xxx2x*	3000	–	106.8	–	–	–	84.7	–	74	–	67.3	–	–	–	–	–
TLP-A145-090-D*xxx2x*	2000	130.1	–	103.3	–	–	90.2	82	–	–	–	–	–	–	–	–
TLP-A145-100-D*xxx2x*	3000	–	106.8	–	–	–	84.7	–	74	–	67.3	–	–	–	–	–
TLP-A145-150-D*xxx2x*	3000	–	113.6	–	–	–	90.2	–	78.8	–	71.6	–	–	–	–	–
TLP-A145-250-D*xxx2x*	4500	–	–	–	105.1	–	–	–	83.4	–	–	72.8	–	66.2	–	–
TLP-A200-200-D*xxx2x*	3000	–	125.9	–	–	–	99.9	–	87.3	–	79.3	–	–	–	–	–
TLP-A200-300-D*xxx2x*	2500	–	140	–	–	–	111.1	–	97.1	–	88.2	–	–	–	–	–
TLP-A200-350-D*xxx2x*	3000	–	140	–	–	–	111.1	–	97.1	–	88.2	–	–	–	–	–
TLP-A200-450-D*xxx2x*	3000	–	149.7	–	–	–	118.8	–	103.8	–	94.3	–	–	–	–	–
TLP-A200-550-D*xxx2x*	3000	–	149.2	–	–	–	118.4	–	103.4	–	94	–	–	–	–	–
TLP-A200-750-D*xxx2x*	2500	–	159.3	–	–	–	126.4	–	110.4	–	100.3	–	–	–	–	–
TLP-A235-11K-D*xxx2x*	2000	435	–	345.3	–	–	301.6	274	–	–	–	–	–	–	–	–
TLP-A235-15K-D*xxx2x*	2000	463.1	–	367.6	–	–	321.1	291.7	–	–	–	–	–	–	–	–
TLP-B070-040-D*xxx2x*	6000	–	–	–	–	–	25	–	–	–	19.9	–	–	17.4	–	15.8
TLP-B090-075-D*xxx2x*	6000	–	–	–	–	–	35.6	–	–	–	28.2	–	–	24.7	–	22.4
TLP-B115-100-D*xxx2x*	5000	–	–	–	–	52.9	–	–	–	42	–	–	36.7		33.3	–
TLP-B115-200-D*xxx2x*	5000	–	–	–	–	58.1	–	–	–	46.1	–	–	10.3		36.6	–
TLP-B145-050-D*xxx2x*	3000	–	106.8	–	–	–	84.7	–	74	–	67.3	–	–	–	–	–
TLP-B145-100-D*xxx2x*	3000	–	106.8	–	–	–	84.7	–	74	–	67.3	–	–	–	–	–
TLP-B145-150-D*xxx2x*	3000	–	113.6	–	–	–	90.2	–	78.8	–	71.6	–	–	–	–	–
TLP-B145-200-D*xxx2x*	3000	–	120.3	–	–	–	95.5	–	83.4	–	75.8	–	–	–	–	–
TLP-B145-250-D*xxx2x*	4500	–	–	–	105.1	–	–	–	83.4	–	–	72.8	–	66.2	–	–
TLP-B200-300-D*xxx2x*	2500	–	140	–	–	–	111.1	–	97.1	–	88.2	–	–	–	–	–
TLP-B200-450-D*xxx2x*	3000	–	149.7	–	–	–	118.8	–	103.8	–	94.3	–	–	–	–	–
TLP-B200-550-D*xxx2x*	3000	–	149.2	–	–	–	118.4	–	103.4	–	94	–	–	–	–	–
TLP-B200-750-D*xxx2x*	2500	–	159.3	–	–	–	126.4	–	110.4	–	100.3	–	–	–	–	–
TLP-B235-11K-D*xxx2x*	2000	435		345.3	–	–	301.6	274	–	–	–	–	–	–	–	–
TLP-B235-14K-D*xxx2x*	2000	463.1		367.6	–	–	321.1	291.7	–	–	–	–	–	–	–	–

(1) 1.0 kgf = 2.2 lbf or 9.8 N.

Axial Load Force Ratings (maximum radial load) for Non-brake Motors

Motor Cat. No. (1)	Maximum Speed rpm	RPM													
		500 kgf	750 kgf	1000 kgf	1125 kgf	1250 kgf	1500 kgf	2000 kgf	2250 kgf	2500 kgf	3000 kgf	3375 kgf	3750 kgf	4500 kgf	5000 kgf	6000 kgf
TLP-A046-005-D*xxx2x*	6000	–	–	–	–	–	5.6	–	–	–	4.1	–	–	3.4	–	3.0
TLP-A046-010-D*xxx2x*	6000	–	–	–	–	–	6	–	–	–	4.4	–	–	3.7	–	3.3
TLP-A070-020-D*xxx2x*	6000	–	–	–	–	–	10.1	–	–	–	7.4	–	–	6.2	–	5.5
TLP-A070-040-D*xxx2x*	6000	–	–	–	–	–	11.3	–	–	–	8.3	–	–	7.0	–	6.2
TLP-A090-075-D*xxx2x*	6000	–	–	–	–	–	13.6	–	–	–	10.1	–	–	8.5	–	7.5
TLP-A100-100-D*xxx2x*	3000	–	18.4	–	–	–	13.6	–	11.4	–	10.1	–	–	–	–	–
TLP-A115-100-D*xxx2x*	5000	–	–	–	–	18.1	–	–	–	13.4	–	–	11.2	–	9.9	–
TLP-A115-200-D*xxx2x*	5000	–	–	–	–	20.5	–	–	–	15.1	–	–	12.7	–	11.2	–
TLP-A145-050-D*xxx2x*	3000	–	28.1	–	–	–	20.8	–	17.5	–	15.4	–	–	–	–	–
TLP-A145-090-D*xxx2x*	2000	37.2	–	27.5	–	–	23.1	20.4	–	–	–	–	–	–	–	–
TLP-A145-100-D*xxx2x*	3000	–	28.1	–	–	–	20.8	–	17.5	–	15.4	–	–	–	–	–
TLP-A145-150-D*xxx2x*	3000	–	31.2	–	–	–	23.1	–	19.4	–	17.1	–	–	–	–	–
TLP-A145-250-D*xxx2x*	4500	–	–	–	28.7	–	–	–	21.1	–	–	17.8	–	15.7	–	–
TLP-A200-200-D*xxx2x*	3000	–	54.3	–	–	–	40.2	–	33.7	–	29.7	–	–	–	–	–
TLP-A200-300-D*xxx2x*	2500	–	60.8	–	–	–	45.0	–	37.7	–	33.3	–	–	–	–	–
TLP-A200-350-D*xxx2x*	3000	–	60.8	–	–	–	45.0	–	37.7	–	33.3	–	–	–	–	–
TLP-A200-450-D*xxx2x*	3000	–	65.3	–	–	–	48.3	–	40.5	–	35.8	–	–	–	–	–
TLP-A200-550-D*xxx2x*	3000	–	65.0	–	–	–	48.1	–	40.3	–	35.6	–	–	–	–	–
TLP-A200-750-D*xxx2x*	2500	–	69.8	–	–	–	51.7	–	43.3	–	38.2	–	–	–	–	–
TLP-A235-11K-D*xxx2x*	2000	65.0	–	48.1	–	–	40.3	35.6	–	–	–	–	–	–	–	–
TLP-A235-15K-D*xxx2x*	2000	77.7	–	57.5	–	–	48.2	42.6	–	–	–	–	–	–	–	–
TLP-B070-040-D*xxx2x*	6000	–	–	–	–	–	11.3	–	–	–	8.3	–	–	7	–	6.2
TLP-B090-075-D*xxx2x*	6000	–	–	–	–	–	13.6	–	–	–	10.1	–	–	8.5	–	7.5
TLP-B115-100-D*xxx2x*	5000	–	–	–	–	18.1	–	–	–	13.4	–	–	11.2		9.9	–
TLP-B115-200-D*xxx2x*	5000	–	–	–	–	20.5	–	–	–	15.1	–	–	12.7		11.2	–
TLP-B145-050-D*xxx2x*	3000	–	28.1	–	–	–	20.8	–	17.5	–	15.4	–	–	–	–	–
TLP-B145-100-D*xxx2x*	3000	–	28.1	–	–	–	20.8	–	17.5	–	15.4	–	–	–	–	–
TLP-B145-150-D*xxx2x*	3000	–	31.2	–	–	–	23.1	–	19.4	–	17.1	–	–	–	–	–
TLP-B145-200-D*xxx2x*	3000	–	34.2	–	–	–	25.3	–	21.2	–	18.7	–	–	–	–	–
TLP-B145-250-D*xxx2x*	4500	–	–	–	28.7	–	–	–	21.1	–	–	17.8	–	15.7	–	–
TLP-B200-300-D*xxx2x*	2500	–	60.8	–	–	–	45	–	37.7	–	33.3	–	–	–	–	–
TLP-B200-450-D*xxx2x*	3000	–	65.3	–	–	–	48.3	–	40.5	–	35.8	–	–	–	–	–
TLP-B200-550-D*xxx2x*	3000	–	65	–	–	–	48.1	–	40.3	–	35.6	–	–	–	–	–
TLP-B200-750-D*xxx2x*	2500	–	69.8	–	–	–	51.7	–	43.3	–	38.2	–	–	–	–	–
TLP-B235-11K-D*xxx2x*	2000	65	–	48.1	–	–	40.3	35.6	–	–	–	–	–	–	–	–
TLP-B235-14K-D*xxx2x*	2000	77.7	–	57.5	–	–	48.2	42.6	–	–	–	–	–	–	–	–

(1) 1.0 kgf = 2.2 lbf or 9.8 N.

Axial Load Force Ratings (zero radial load) for Non-brake Motors

Motor Cat. No. (1)	Maximum Speed rpm	RPM														
		500 kgf	750 kgf	1000 kgf	1125 kgf	1250 kgf	1500 kgf	2000 kgf	2250 kgf	2500 kgf	3000 kgf	3375 kgf	3750 kgf	4500 kgf	5000 kgf	6000 kgf
TLP-A046-005-D*xxx2x*	6000	–	–	–	–	–	7.8	–	–	–	5.7	–	–	4.8	–	4.2
TLP-A046-010-D*xxx2x*	6000	–	–	–	–	–	7.8	–	–	–	5.7	–	–	4.8	–	4.2
TLP-A070-020-D*xxx2x*	6000	–	–	–	–	–	15.4	–	–	–	11.4	–	–	9.5	–	8.4
TLP-A070-040-D*xxx2x*	6000	–	–	–	–	–	15.4	–	–	–	11.4	–	–	9.5	–	8.4
TLP-A090-075-D*xxx2x*	6000	–	–	–	–	–	20.4	–	–	–	15.1	–	–	12.6	–	11.1
TLP-A100-100-D*xxx2x*	3000	–	27.5	–	–	–	20.4	–	17.1	–	15.1	–	–	–	–	–
TLP-A115-100-D*xxx2x*	5000	–	–	–	–	27.9	–	–	–	20.6	–	–	17.3	–	15.3	–
TLP-A115-200-D*xxx2x*	5000	–	–	–	–	27.9	–	–	–	20.6	–	–	17.3	–	15.3	–
TLP-A145-050-D*xxx2x*	3000	–	56.4	–	–	–	41.7	–	35.0	–	30.9	–	–	–	–	–
TLP-A145-090-D*xxx2x*	2000	67.2	–	49.7	–	–	41.7	36.8	–	–	–	–	–	–	–	–
TLP-A145-100-D*xxx2x*	3000	–	56.4	–	–	–	41.7	–	35.0	–	30.9	–	–	–	–	–
TLP-A145-150-D*xxx2x*	3000	–	56.4	–	–	–	41.7	–	35.0	–	30.9	–	–	–	–	–
TLP-A145-250-D*xxx2x*	4500	–	–	–	47.3	–	–	–	35.0	–	–	29.3	–	25.9	–	–
TLP-A200-200-D*xxx2x*	3000	–	91.9	–	–	–	68.0	–	57.0	–	50.3	–	–	–	–	–
TLP-A200-300-D*xxx2x*	2500	–	91.9	–	–	–	68.0	–	57.0	–	50.3	–	–	–	–	–
TLP-A200-350-D*xxx2x*	3000	–	91.9	–	–	–	68.0	–	57.0	–	50.3	–	–	–	–	–
TLP-A200-450-D*xxx2x*	3000	–	91.9	–	–	–	68.0	–	57.0	–	50.3	–	–	–	–	–
TLP-A200-550-D*xxx2x*	3000	–	91.9	–	–	–	68.0	–	57.0	–	50.3	–	–	–	–	–
TLP-A200-750-D*xxx2x*	2500	–	91.9	–	–	–	68.0	–	57.0	–	50.3	–	–	–	–	–
TLP-A235-11K-D*xxx2x*	2000	136.5	–	101.0	–	–	84.7	74.8	–	–	–	–	–	–	–	–
TLP-A235-15K-D*xxx2x*	2000	136.5	–	101.0	–	–	84.7	74.8	–	–	–	–	–	–	–	–
TLP-B070-040-D*xxx2x*	6000	–	–	–	–	–	15.4	–	–	–	11.4	–	–	9.5	–	8.4
TLP-B090-075-D*xxx2x*	6000	–	–	–	–	–	20.4	–	–	–	15.1	–	–	12.6	–	11.1
TLP-B115-100-D*xxx2x*	5000	–	–	–	–	27.9	–	–	–	20.6	–	–	17.3	–	15.3	–
TLP-B115-200-D*xxx2x*	5000	–	–	–	–	27.9	–	–	–	20.6	–	–	17.3	–	15.3	–
TLP-B145-050-D*xxx2x*	3000	–	56.4	–	–	–	41.7		35	–	30.9	–	–	–	–	–
TLP-B145-100-D*xxx2x*	3000	–	56.4	–	–	–	41.7		35	–	30.9	–	–	–	–	–
TLP-B145-150-D*xxx2x*	3000	–	56.4	–	–	–	41.7		35	–	30.9	–	–	–	–	–
TLP-B145-200-D*xxx2x*	3000	–	56.4	–	–	–	41.7		35	–	30.9	–	–	–	–	–
TLP-B145-250-D*xxx2x*	4500	–	–	–	47.3	–	–	–	35	–	–	29.3		25.9	–	–
TLP-B200-300-D*xxx2x*	2500	–	91.9	–	–	–	68	–	57	–	50.3	–	–	–	–	–
TLP-B200-450-D*xxx2x*	3000	–	91.9	–	–	–	68	–	57	–	50.3	–	–	–	–	–
TLP-B200-550-D*xxx2x*	3000	–	91.9	–	–	–	68	–	57	–	50.3	–	–	–	–	–
TLP-B200-750-D*xxx2x*	2500	–	91.9	–	–	–	68	–	57	–	50.3	–	–	–	–	–
TLP-B235-11K-D*xxx2x*	2000	136.5	–	101	–	–	84.7	74.8	–	–	–	–	–	–	–	–
TLP-B235-14K-D*xxx2x*	2000	136.5	–	101	–	–	84.7	74.8	–	–	–	–	–	–	–	–

(1) 1.0 kgf = 2.2 lbf or 9.8 N.

Radial Load Force Ratings (maximum) for Brake Motors

Motor Cat. No. (1)	Maximum Speed rpm	RPM													
		500 kgf	750 kgf	1000 kgf	1125 kgf	1250 kgf	1500 kgf	2000 kgf	2250 kgf	2500 kgf	3000 kgf	3375 kgf	3750 kgf	4500 kgf	5000 kgf	6000 kgf
TLP-A046-005-D*xxx4x*	6000	–	–	–	–	–	10.5	–	–	–	8.4	–	–	7.3	–	6.6
TLP-A046-010-D*xxx4x*	6000	–	–	–	–	–	10.9	–	–	–	8.7	–	–	7.6	–	6.9
TLP-A070-020-D*xxx4x*	6000	–	–	–	–	–	26	–	–	–	20.6	–	–	18	–	16.4
TLP-A070-040-D*xxx4x*	6000	–	–	–	–	–	27.3	–	–	–	21.7	–	–	18.9	–	17.2
TLP-A090-075-D*xxx4x*	6000	–	–	–	–	–	39.3	–	–	–	31.2	–	–	27.2	–	24.7
TLP-A100-100-D*xxx4x*	3000	–	65.3	–	–	–	51.8	–	45.3	–	41.1	–	–	–	–	–
TLP-A115-100-D*xxx4x*	5000	–	–	–	–	57.9	–	–	–	45.9	–	–	40.1	–	36.4	–
TLP-A115-200-D*xxx4x*	5000	–	–	–	–	60.3	–	–	–	47.8	–	–	41.8	–	38	–
TLP-A145-050-D*xxx4x*	3000	–	120.3	–	–	–	95.5	–	83.4	–	75.8	–	–	–	–	–
TLP-A145-090-D*xxx4x*	2000	142.1	–	112.8	–	–	98.5	89.5	–	–	–	–	–	–	–	–
TLP-A145-100-D*xxx4x*	3000	–	120.3	–	–	–	95.5	–	83.4	–	75.8	–	–	–	–	–
TLP-A145-150-D*xxx4x*	3000	–	124.1	–	–	–	98.5	–	86	–	78.2	–	–	–	–	–
TLP-A145-250-D*xxx4x*	4500	–	–	–	111.2	–	–	–	88.2	–	–	77.1	–	70	–	–
TLP-A200-200-D*xxx4x*	3000	–	140.4	–	–	–	111.4	–	97.3	–	88.4	–	–	–	–	–
TLP-A200-300-D*xxx4x*	2500	–	149.7	–	–	–	118.8	–	103.8	–	94.3	–	–	–	–	–
TLP-A200-350-D*xxx4x*	3000	–	149.7	–	–	–	118.8	–	103.8	–	94.3	–	–	–	–	–
TLP-A200-450-D*xxx4x*	3000	–	158.8	–	–	–	126.1	–	110.1	–	100.1	–	–	–	–	–
TLP-A200-550-D*xxx4x*	3000	–	154.8	–	–	–	122.9	–	107.3	–	97.5	–	–	–	–	–
TLP-A200-750-D*xxx4x*	2500	–	163.3	–	–	–	129.6	–	113.2	–	102.9	–	–	–	–	–
TLP-A235-11K-D*xxx4x*	2000	458.3	–	363.8	–	–	317.8	288.7	–	–	–	–	–	–	–	–
TLP-A235-15K-D*xxx4x*	2000	478.8	–	380	–	–	332	301.6	–	–	–	–	–	–	–	–
TLP-B070-040-D*xxx4x*	6000	–	–	–	–	–	27.3	–	–	–	21.7	–	–	18.9	–	17.2
TLP-B090-075-D*xxx4x*	6000	–	–	–	–	–	39.3	–	–	–	31.2	–	–	27.2	–	24.7
TLP-B115-100-D*xxx4x*	5000	–	–	–	–	57.9	–	–	–	45.9	–	–	40.1	–	36.4	–
TLP-B115-200-D*xxx4x*	5000	–	–	–	–	60.3	–	–	–	47.8	–	–	41.8	–	38	–
TLP-B145-050-D*xxx4x*	3000	–	120.3	–	–	–	95.5	–	83.4	–	75.8	–	–	–	–	–
TLP-B145-100-D*xxx4x*	3000	–	120.3	–	–	–	95.5	–	83.4	–	75.8	–	–	–	–	–
TLP-B145-150-D*xxx4x*	3000	–	124.1	–	–	–	98.5	–	86	–	78.2	–	–	–	–	–
TLP-B145-200-D*xxx4x*	3000	–	127.2	–	–	–	101	–	88.2	–	80.2	–	–	–	–	–
TLP-B145-250-D*xxx4x*	4500	–		–	111.2	–	–	–	88.2	–		77.1	–	70	–	–
TLP-B200-300-D*xxx4x*	2500	–	149.7	–	–	–	118.8	–	103.8	–	94.3	–	–	–	–	–
TLP-B200-450-D*xxx4x*	3000	–	158.8	–	–	–	126.1	–	110.1	–	100.1	–	–	–	–	–
TLP-B200-550-D*xxx4x*	3000	–	154.8	–	–	–	122.9	–	107.3	–	97.5	–	–	–	–	–
TLP-B200-750-D*xxx4x*	2500	–	163.3	–	–	–	129.6	–	113.2	–	102.9	–	–	–	–	–
TLP-B235-11K-D*xxx4x*	2000	458.3	–	363.8	–	–	317.8	288.7	–	–	–	–	–	–	–	–
TLP-B235-14K-D*xxx4x*	2000	478.8	–	380	–	–	332	301.6	–	–	–	–	–	–	–	–

(1) 1.0 kgf = 2.2 lbf or 9.8 N.

Axial Load Force Ratings (maximum radial load) for Brake Motors

Motor Cat. No. (1)	Maximum Speed rpm	RPM														
		500 kgf	750 kgf	1000 kgf	1125 kgf	1250 kgf	1500 kgf	2000 kgf	2250 kgf	2500 kgf	3000 kgf	3375 kgf	3750 kgf	4500 kgf	5000 kgf	6000 kgf
TLP-A046-005-D*xxx4x*	6000	–	–	–	–	–	6.7	–	–	–	5	–	–	4.2	–	3.7
TLP-A046-010-D*xxx4x*	6000	–	–	–	–	–	6.9	–	–	–	5.1	–	–	4.3	–	3.8
TLP-A070-020-D*xxx4x*	6000	–	–	–	–	–	11.7	–	–	–	8.7	–	–	7.3	–	6.4
TLP-A070-040-D*xxx4x*	6000	–	–	–	–	–	12.3	–	–	–	9.1	–	–	7.6	–	6.7
TLP-A090-075-D*xxx4x*	6000	–	–	–	–	–	15.3	–	–	–	11.3	–	–	9.5	–	8.4
TLP-A100-100-D*xxx4x*	3000	–	20.1	–	–	–	14.9	–	12.5	–	11	–	–	–	–	–
TLP-A115-100-D*xxx4x*	5000	–	–	–	–	20.3	–	–	–	15	–	–	12.6	–	11.1	–
TLP-A115-200-D*xxx4x*	5000	–	–	–	–	21.5	–	–	–	15.9	–	–	13.3	–	11.8	–
TLP-A145-050-D*xxx4x*	3000	–	34.2	–	–	–	25.3	–	21.2	–	18.7	–	–	–	–	–
TLP-A145-090-D*xxx4x*	2000	42.9	–	31.8	–	–	26.6	23.5	–	–	–	–	–	–	–	–
TLP-A145-100-D*xxx4x*	3000	–	34.2	–	–	–	25.3	–	21.2	–	18.7	–	–	–	–	–
TLP-A145-150-D*xxx4x*	3000	–	36	–	–	–	26.6	–	22.3	–	19.7	–	–	–	–	–
TLP-A145-250-D*xxx4x*	4500	–	–	–	31.4	–	–	–	23.2	–	–	19.5	–	17.2	–	–
TLP-A200-200-D*xxx4x*	3000	–	60.9	–	–	–	45.1	–	37.8	–	33.4	–	–	–	–	–
TLP-A200-300-D*xxx4x*	2500	–	65.3	–	–	–	48.3	–	40.5	–	35.8	–	–	–	–	–
TLP-A200-350-D*xxx4x*	3000	–	65.3	–	–	–	48.3	–	40.5	–	35.8	–	–	–	–	–
TLP-A200-450-D*xxx4x*	3000	–	69.6	–	–	–	51.5	–	43.2	–	38.1	–	–	–	–	–
TLP-A200-550-D*xxx4x*	3000	–	67.7	–	–	–	50.1	–	42	–	37.1	–	–	–	–	–
TLP-A200-750-D*xxx4x*	2500	–	71.7	–	–	–	53.1	–	44.5	–	39.3	–	–	–	–	–
TLP-A235-11K-D*xxx4x*	2000	75.5	–	55.9	–	–	46.8	41.3	–	–	–	–	–	–	–	–
TLP-A235-15K-D*xxx4x*	2000	85	–	62.9	–	–	52.8	46.6	–	–	–	–	–	–	–	–
TLP-B070-040-D*xxx4x*	6000	–	–	–	–	–	12.3	–	–	–	9.1			7.6		6.7
TLP-B090-075-D*xxx4x*	6000	–	–	–	–	–	15.3	–	–	–	11.3			9.5		8.4
TLP-B115-100-D*xxx4x*	5000	–	–	–	–	20.3	–	–	–	15	–	–	12.6	–	11.1	–
TLP-B115-200-D*xxx4x*	5000	–	–	–	–	21.5	–	–	–	15.9	–	–	13.3	–	11.8	–
TLP-B145-050-D*xxx4x*	3000	–	34.2	–	–	–	25.3	–	21.2	–	18.7	–	–	–	–	–
TLP-B145-100-D*xxx4x*	3000	–	34.2	–	–	–	25.3	–	21.2	–	18.7	–	–	–	–	–
TLP-B145-150-D*xxx4x*	3000	–	36	–	–	–	26.6	–	22.3	–	19.7	–	–	–	–	–
TLP-B145-200-D*xxx4x*	3000	–	37.4	–	–	–	27.7	–	23.2	–	20.5	–	–	–	–	–
TLP-B145-250-D*xxx4x*	4500	–		–	31.4	–	–	–	23.2	–	–	19.5	–	17.2	–	–
TLP-B200-300-D*xxx4x*	2500	–	65.3	–	–	–	48.3	–	40.5	–	35.8	–	–	–	–	–
TLP-B200-450-D*xxx4x*	3000	–	69.6	–	–	–	51.5	–	43.2	–	38.1	–	–	–	–	–
TLP-B200-550-D*xxx4x*	3000	–	67.7	–	–	–	50.1	–	42	–	37.1	–	–	–	–	–
TLP-B200-750-D*xxx4x*	2500	–	71.7	–	–	–	53.1	–	44.5	–	39.3	–	–	–	–	–
TLP-B235-11K-D*xxx4x*	2000	75.5	–	55.9	–	–	46.8	41.3	–	–	–	–	–	–	–	–
TLP-B235-14K-D*xxx4x*	2000	85	–	62.9	–	–	52.8	46.6	–	–	–	–	–	–	–	–

(1) 1.0 kgf = 2.2 lbf or 9.8 N.

Axial Load Force Ratings (zero radial load) for Brake Motors

Motor Cat. No. (1)	Maximum Speed rpm	RPM														
		500 kgf	750 kgf	1000 kgf	1125 kgf	1250 kgf	1500 kgf	2000 kgf	2250 kgf	2500 kgf	3000 kgf	3375 kgf	3750 kgf	4500 kgf	5000 kgf	6000 kgf
TLP-A046-005-D*xxx*4*x*	6000	–	–	–	–	–	8.1	–	–	–	6	–	–	5.0	–	4.4
TLP-A046-010-D*xxx*4*x*	6000	–	–	–	–	–	8.1	–	–	–	6	–	–	5.0	–	4.4
TLP-A070-020-D*xxx*4*x*	6000	–	–	–	–	–	15.4	–	–	–	11.4	–	–	9.5	–	8.4
TLP-A070-040-D*xxx*4*x*	6000	–	–	–	–	–	15.4	–	–	–	11.4	–	–	9.5	–	8.4
TLP-A090-075-D*xxx*4*x*	6000	–	–	–	–	–	20.4	–	–	–	15.1	–	–	12.6	–	11.1
TLP-A100-100-D*xxx*4*x*	3000	–	27.5	–	–	–	20.4	–	17.1	–	15.1	–	–	–	–	–
TLP-A115-100-D*xxx*4*x*	5000	–	–	–	–	27.9	–	–	–	20.6	–	–	17.3	–	15.3	–
TLP-A115-200-D*xxx*4*x*	5000	–	–	–	–	27.9	–	–	–	20.6	–	–	17.3	–	15.3	–
TLP-A145-050-D*xxx*4*x*	3000	–	56.4	–	–	–	41.7	–	35.0	–	30.9	–	–	–	–	–
TLP-A145-090-D*xxx*4*x*	2000	67.2	–	49.7	–	–	41.7	36.8	–	–	–	–	–	–	–	–
TLP-A145-100-D*xxx*4*x*	3000	–	56.4	–	–	–	41.7	–	35.0	–	30.9	–	–	–	–	–
TLP-A145-150-D*xxx*4*x*	3000	–	56.4	–	–	–	41.7	–	35.0	–	30.9	–	–	–	–	–
TLP-A145-250-D*xxx*4*x*	4500	–	–	–	47.3	–	–	–	35.0	–	–	29.3	–	25.9	–	–
TLP-A200-200-D*xxx*4*x*	3000	–	91.9	–	–	–	68.0	–	57.0	–	50.3	–	–	–	–	–
TLP-A200-300-D*xxx*4*x*	2500	–	91.9	–	–	–	68.0	–	57.0	–	50.3	–	–	–	–	–
TLP-A200-350-D*xxx*4*x*	3000	–	91.9	–	–	–	68.0	–	57.0	–	50.3	–	–	–	–	–
TLP-A200-450-D*xxx*4*x*	3000	–	91.9	–	–	–	68.0	–	57.0	–	50.3	–	–	–	–	–
TLP-A200-550-D*xxx*4*x*	3000	–	91.9	–	–	–	68.0	–	57.0	–	50.3	–	–	–	–	–
TLP-A200-750-D*xxx*4*x*	2500	–	91.9	–	–	–	68.0	–	57.0	–	50.3	–	–	–	–	–
TLP-A235-11K-D*xxx*4*x*	2000	136.5	–	101.0	–	–	84.7	74.8	–	–	–	–	–	–	–	–
TLP-A235-15K-D*xxx*4*x*	2000	136.5	–	101.0	–	–	84.7	74.8	–	–	–	–	–	–	–	–
TLP-B070-040-D*xxx*4*x*	6000	–	–	–	–	–	15.4	–	–	–	11.4	–	–	9.5	–	8.4
TLP-B090-075-D*xxx*4*x*	6000	–	–	–	–	–	20.4	–	–	–	15.1	–	–	12.6	–	11.1
TLP-B115-100-D*xxx*4*x*	5000	–	–	–	–	27.9	–	–	–	20.6	–	–	17.3	–	15.3	–
TLP-B115-200-D*xxx*4*x*	5000	–	–	–	–	27.9	–	–	–	20.6	–	–	17.3	–	15.3	–
TLP-B145-050-D*xxx*4*x*	3000	–	56.4	–	–	–	41.7	–	35	–	30.9	–	–	–	–	–
TLP-B145-100-D*xxx*4*x*	3000	–	56.4	–	–	–	41.7	–	35	–	30.9	–	–	–	–	–
TLP-B145-150-D*xxx*4*x*	3000	–	56.4	–	–	–	41.7	–	35	–	30.9	–	–	–	–	–
TLP-B145-200-D*xxx*4*x*	3000	–	56.4	–	–	–	41.7	–	35	–	30.9	–	–	–	–	–
TLP-B145-250-D*xxx*4*x*	4500	–	–	–	47.3	–	–	–	35	–	–	29.3	–	25.9	–	–
TLP-B200-300-D*xxx*4*x*	2500	–	91.9	–	–	–	68	–	57	–	50.3	–	–	–	–	–
TLP-B200-450-D*xxx*4*x*	3000	–	91.9	–	–	–	68	–	57	–	50.3	–	–	–	–	–
TLP-B200-550-D*xxx*4*x*	3000	–	91.9	–	–	–	68	–	57	–	50.3	–	–	–	–	–
TLP-B200-750-D*xxx*4*x*	2500	–	91.9	–	–	–	68	–	57	–	50.3	–	–	–	–	–
TLP-B235-11K-D*xxx*4*x*	2000	136.5	–	101	–	–	84.7	74.8	–	–	–	–	–	–	–	–
TLP-B235-14K-D*xxx*4*x*	2000	136.5	–	101	–	–	84.7	74.8	–	–	–	–	–	–	–	–

(1) 1.0 kgf = 2.2 lbf or 9.8 N.

Dimensions - Kinetix TLP Servo Motors

Motor Dimensions (frame sizes 046, 070, 090, and 100 mm)

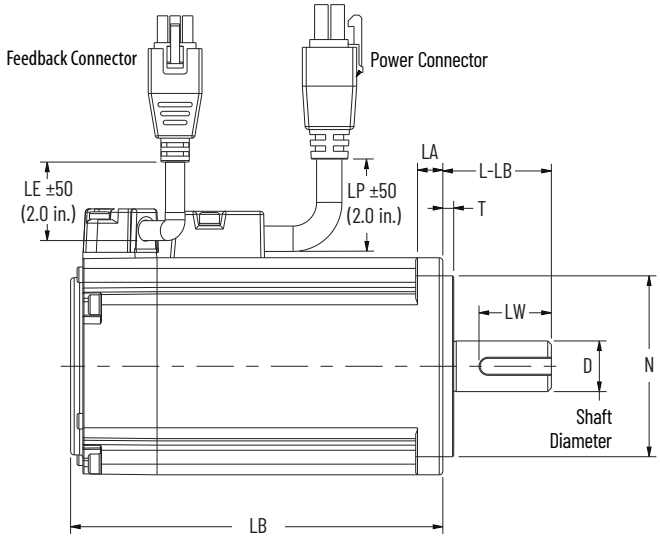

Dimensions are in mm (in.)

Pilot Diameter Tolerances
TLP-A046*xx* Motors:
Ø 29.979...30.000 (1.180...1.181)
TLP-A/B070*xx* Motors:
Ø 49.975...50.000 (1.967...1.968)
TLP-A/B090*xx* Motors:
Ø 69.970...70.000 (2.754...2.755)
TLP-A100*xx* Motors:
Ø 79.970...80.000 (3.148...3.149)

Shaft Diameter Tolerances
TLP-A046*xx* Motors:
Ø 7.991...8.000 (0.3146...0.3149)
TLP-A/B070*xx* Motors:
Ø 13.989...14.000 (0.5507...0.5512)
TLP-A/B090*xx* Motors:
Ø 18.987...19.000 (0.7475...0.7480)
TLP-A100*xx* Motors:
Ø 15.989...16.000 (0.6295...0.6299)

Optional Shaft Seal
Refer to page 132 for motor shaft seal kit information.

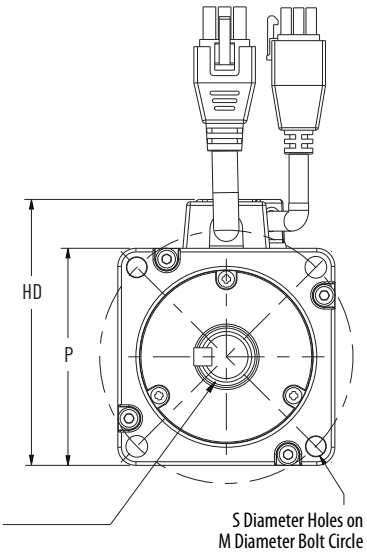

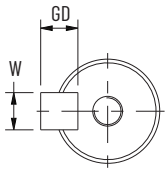

Key Detail

Shaft End Details

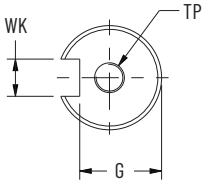

Shaft and Pilot Tolerances	TLP-A046*xx*	TLP-A/B070*xx*	TLP-A/B090*xx*	TLP-A100*xx*
Shaft Runout (T.I.R.)	0.02 (0.0008)	0.02 (0.0008)	0.02 (0.0008)	0.02 (0.0008)
Pilot Eccentricity (T.I.R.)	0.04 (0.0016)	0.30 (0.0118)	0.04 (0.0016)	0.04 (0.0016)
Max Face Runout (T.I.R.)	0.04 (0.0016)	0.04 (0.0016)	0.04 (0.0016)	0.04 (0.0016)
Shaft-end Threaded Hole (TP)	M3x0.5-6H, ⏚ 6	M4x0.7-6H, ⏚ 8	M6x1.0-6H, ⏚ 10	M5x0.8-6H, ⏚ 15
On-motor Cable Length (LE/LP)	A1 Connector = 1.0 m (39.4 in.), A3 Connector = 300 mm (11.8 in.)			

Motor Cat. No.	HD mm (in.)	T mm (in.)	LA mm (in.)	LB (1) mm (in.)	L-LB (2) mm (in.)	LW mm (in.)	D mm (in.)	M mm (in.)	S mm (in.)	N (3) mm (in.)	P mm (in.)	G mm (in.)	GD mm (in.)	W mm (in.)	WK mm (in.)
TLP-A046-005	53.8 (2.12)	2.5 (4) (0.10)	5.0 (0.20)	71.9 (2.83)	25.0 (0.98)	16.0 (0.630)	8.0 (0.3149)	46.0 (1.811)	4.50 (4) (0.177)	30.0 (1.181)	40.0 (1.57)	6.20 (0.244)	3.0 (0.118)	3.0 (5) (0.118)	3.0 (6) (0.118)
TLP-A046-010				86.0 (3.39)											
TLP-A070-020	74.1 (2.92)	3.0 (4) (0.12)	7.5 (0.30)	84.7 (3.33)	30.0 (1.18)	20.0 (0.787)	14.0 (0.5512)	70.0 (2.756)	5.50 (7) (0.216)	50.0 (1.968)	60.0 (2.36)	11.0 (0.433)	5.0 (0.197)	5.0 (8) (0.197)	5.0 (8) (0.197)
TLP-A/B070-040				106.7 (4.20)											
TLP-A/B090-075	94.1 (3.70)	3.0 (9) (0.12)	8.0 (0.31)	116.5 (4.59)	40.0 (1.57)	25.0 (0.984)	19.0 (0.7480)	90.0 (3.543)	6.60 (7) (0.260)	70.0 (2.755)	80.0 (3.15)	15.5 (0.610)	6.0 (0.236)	6.0 (8) (0.236)	6.0 (8) (0.236)
TLP-A100-100	98.8 (3.89)	3.0 (4) (0.12)		153.9 (6.06)	35.0 (1.38)	20.0 (0.787)	16.0 (0.6299)	100 (3.937)	6.60 (4) (0.260)	80.0 (3.149)	86.0 (3.38)	13.0 (0.630)	5.0 (0.197)	5.0 (8) (0.197)	5.0 (8) (0.197)

(1) For TLP-A046-005 motors with brake, add 34.2 mm (1.35 in.). For TLP-A046-010 motors with brake, add 34.8 mm (1.37 in.).
For TLP-A070-020 motors with brake, add 33.6 mm (1.32 in.). For TLP-A/B070-040 motors with brake, add 33.7 mm (1.33 in.).
For TLP-A/B090-075 motors with brake, add 37.4 mm (1.47 in.).
For TLP-A100-100 motors with brake, add 31.1 mm (1.22 in.).
(2) Tolerance for this dimension is ±0.50 mm (±0.020 in.).
(3) See dimensions diagram for tolerances.
(4) Tolerance for this dimension is ±0.10 mm (±0.0039 in.).
(5) Tolerance for this dimension is -0.004, -0.029 mm (0.000157, -0.001141 in.).
(6) Tolerance for this dimension is +0, -0.025 mm (+0, -0.000984 in.).
(7) Tolerance for this dimension is ±0.20 mm (±0.0079 in.).
(8) Tolerance for this dimension is +0, -0.030 mm (+0, -0.001181 in.).
(9) Tolerance for this dimension is ±0.25 mm (±0.0098 in.).

Motors are designed to metric dimensions. Inch dimensions are approximate conversions from millimeters. Dimensions without tolerances are for reference.

Motor Dimensions (frame sizes 115 and 145 mm)

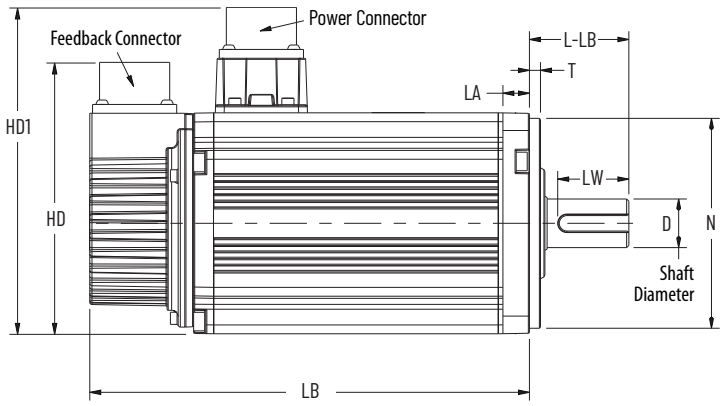

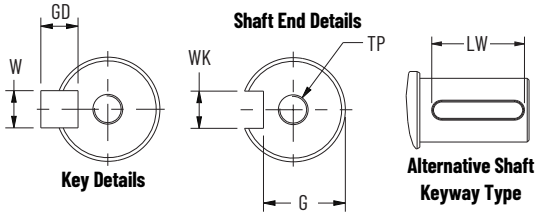

Dimensions are in mm (in.)

Pilot Diameter Tolerances
TLP-A/B115*xx* Motors:
Ø 94.965...95.000 (3.739...3.740)
TLP-A/B145*xx* Motors:
Ø 109.965...110.000 (4.329...4.330)

Shaft Diameter Tolerances
TLP-A/B115*xx* Motors:
Ø 21.987...22.000 (0.8656...0.8661)
TLP-A/B145-050... TLP-B145-200 Motors:
Ø 21.987...22.000 (0.8656...0.8661)
TLP-A/B145-250 Motors:
Ø 23.987...24.000 (0.9444...0.9449)

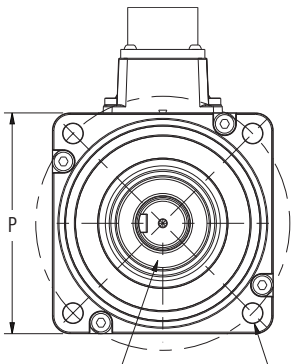

Shaft and Pilot Tolerances	TLP-A/B115*xx*	TLP-A/B145*xx*
Shaft Runout (T.I.R.)	0.02 (0.0008)	0.02 (0.0008)
Pilot Eccentricity (T.I.R.)	0.04 (0.0016)	0.04 (0.0016)
Max Face Runout (T.I.R.)	0.02 (0.0008)	0.04 (0.0016)
Shaft-end Threaded Hole (TP)	M6x1.0-6H, ↧ 20	M6x1.0-6H, ↧ 20

Motor Cat. No.	HD mm (in.)	HD1 mm (in.)	T mm (in.)	LA mm (in.)	LB (1) mm (in.)	L-LB mm (in.)	LW mm (in.)	D (2) mm (in.)	M mm (in.)	S (3) mm (in.)	N (2) mm (in.)	P mm (in.)	G mm (in.)	GD mm (in.)	W (4) mm (in.)	WK (4) mm (in.)
TLP-A/B115-100	122.9 (4.84)	148.1 (5.83)	5.0 (5) (0.20)	12.0 (0.47)	154.0 (6.06)	45.0 (6) (1.77)	36.0 (1.42)	22.0 (0.87)	115 (4.53)	9.0 (0.354)	95.0 (3.74)	100 (3.94)	18.0 (0.71)	7.0 (0.28)	8.0 (0.315)	8.0 (0.315)
TLP-A/B115-200					199.7 (7.86)											
TLP-A/B145-050	138.6 (5.46)	176.4 (6.94)	6.0 (7) (0.24)	11.5 (0.45)	148.2 (5.83)	55.0 (2.17)			145 (5.71)		110 (4.33)	130 (5.12)				
TLP-A145-090					164.2 (6.46)											
TLP-A/B145-100					148.2 (5.83)											
TLP-A/B145-150					168.2 (6.62)											
TLP-B145-200					188.2 (7.41)											
TLP-A/B145-250								24.0 (0.94)					20.0 (0.79)			

(1) For TLP-A/B115-100 motors with brake, add 39.3 mm (1.55 in.).
For TLP-A/B115-200 motors with brake, add 27.0 mm (1.06 in.).
For TLP-A/B145-050 and TLP-A/B145-100 motors with brake, add 36.0 mm (1.42 in.).
For TLP-A145-090 and TLP-A/B145-150 motors with brake, add 34.5 mm (1.36 in.).
For TLP-B145-200 and TLP-A/B145-250 motors with brake, add 28.5 mm (1.22 in.).
(2) See dimensions diagram for tolerances.
(3) For TLP-A/B115 motors, the tolerance is ±0.10 mm (±0.0039 in.).
For TLP-A/B145 motors, the tolerance is ±0.30 mm (±0.0118 in.).
(4) Tolerance for this dimension is +0, -0.036 mm (+0, -0.01417 in.).
(5) Tolerance for this dimension is ±0.10 mm (±0.0039 in.).
(6) Tolerance for this dimension is +0.38, -0.50 mm (+0.015, -0.020 in.).
(7) Tolerance for this dimension is ±0.15 mm (±0.0059 in.).

Motors are designed to metric dimensions. Inch dimensions are approximate conversions from millimeters. Dimensions without tolerances are for reference.

Motor Dimensions (frame sizes 200 and 235 mm)

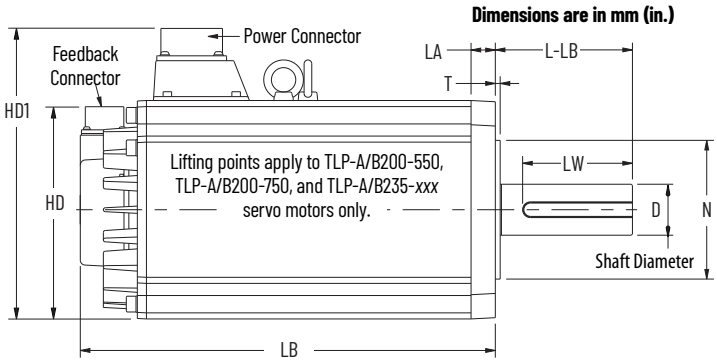

Pilot Diameter Tolerances

TLP-A200-200...TLP-A/B200-750 Motors:
Ø 114.265...114.300 (4.4986...4.500)
TLP-A/B235-11K...TLP-A235-15K Motors:
Ø 199.954...200.00 (7.8722...7.8740)

Shaft Diameter Tolerances

TLP-A200-200...TLP-A/B200-450 Motors:
Ø 34.984...35.000 (1.3773...1.3779)
TLP-A/B200-550...TLP-A/B200-750 Motors:
Ø 41.984...42.000 (1.6529...1.6535)
TLP-A/B235-11K Motors:
Ø 41.984...42.000 (1.6529...1.6535)
TLP-B235-14K and TLP-A235-15K Motors:
Ø 54.989...55.030 (2.1649...2.1665)

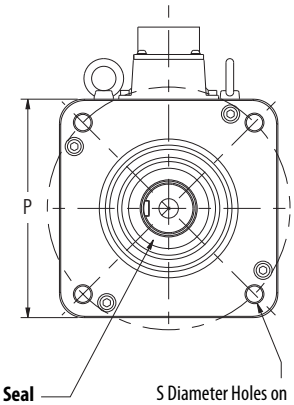

Refer to page 132 for Kinetix TLP motor shaft-seal kit information.

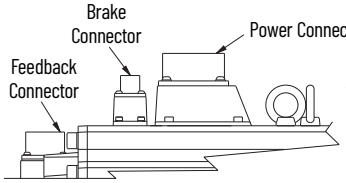

Brake connectors apply to only the TLP-A/B200-550, TLP-A/B200-750, and TLP-A/B235-*xxx* servo motors with the holding brake option.

Key Details

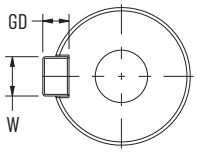

Shaft End Details

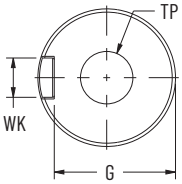

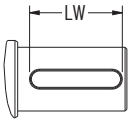

Alternative Shaft Keyway Type

Shaft and Pilot Tolerances	TLP-A/B200-*xxx*	TLP-A/B235-11K	TLP-B235-14K TLP-A235-15K
Shaft Runout (T.I.R.)	0.02 (0.0008)	0.04 (0.0016)	0.04 (0.0016)
Pilot Eccentricity (T.I.R.)	0.04 (0.0016)	0.04 (0.0016)	0.04 (0.0016)
Max Face Runout (T.I.R.)	0.04 (0.0016)	0.06 (0.0024)	0.06 (0.0024)
Shaft-end Threaded Hole (TP)	M12x1.75-6H, ↧ 25	M16x2.0-6H, ↧ 32	M20x2.5-6H, ↧ 40

Motor Cat. No.	HD mm (in.)	HD1 mm (in.)	T mm (in.)	LA mm (in.)	LB (1) mm (in.)	L-LB (2) mm (in.)	LW mm (in.)	D mm (in.)	M mm (in.)	S mm (in.)	N (3) mm (in.)	P mm (in.)	G mm (in.)	GD mm (in.)	W mm (in.)	WK (3) mm (in.)
TLP-A200-200	174.9 (6.89)	231.0 (9.09)	4.0 (4) (0.16)	20.0 (0.79)	169.7 (6.68)	79.0 (3.11)	63.0 (2.48)	35.0 (1.38)	200.0 (7.87)	13.5 (4) (0.53)	114.3 (4.50)	180.0 (7.09)	30.0 (1.18)	8.0 (0.31)	10.0 (5) (0.394)	10.0 (5) (0.394)
TLP-A/B200-300					202.8 (7.98)											
TLP-A200-350																
TLP-A/B200-450					254.0 (10.0)											
TLP-A/B200-550		240.0 (9.45)			280.4 (11.04)	113.0 (4.45)	90.0 (3.54)	42.0 (1.65)		13.5 (6) (0.53)			37.0 (1.46)		12.0 (7) (0.47)	12.0 (7) (0.47)
TLP-A/B200-750					342.7 (13.49)											
TLP-A/B235-11K	194.6 (7.66)	279.1 (10.99)			372.1 (14.65)	116.0 (4.57)			235.0 (9.25)		200.0 (7.87)	220.0 (8.66)				
TLP-B235-14K					451.1 (17.76)			55.0 (2.17)					49.0 (1.93)	10.0 (0.39)	16.0 (7) (0.63)	16.0 (7) (0.63)
TLP-A235-15K																

(1) For TLP-A200-200 and TLP-A/B200-750 motors with brake, add 34.1 mm (1.34 in.).
For TLP-A/B200-300 and TLP-A/B200-350 motors with brake, add 33.2 mm (1.31 in.).
For TLP-A/B200-450 motors with brake, add 44.0 mm (1.73 in.).
For TLP-A/B200-550 motors with brake, add 32.0 mm (1.26 in.).
For TLP-A/B235-11K, TLP-B235-14K, and TLP-A235-15K motors with brake, add 63.0 mm (2.48 in.).
(2) Tolerance for this dimension is +0.38, -0.50 mm (+0.015, -0.020 in.).
(3) See dimensions diagram for tolerances.
(4) Tolerance for this dimension is ±0.10 mm (±0.0039 in.).
(5) Tolerance for this dimension is +0, -0.036 mm (+0, -0.01417 in.).
(6) Tolerance for this dimension is ±0.20 mm (±0.0079 in.).
(7) Tolerance for this dimension is +0, -0.043 mm (+0, -0.00169 in.).

Motors are designed to metric dimensions. Inch dimensions are approximate conversions from millimeters. Dimensions without tolerances are for reference.

Kinetix TL and TLY Compact Servo Motors

The Kinetix TL and TLY servo motors are low-inertia high-performance servo motors featuring metric and NEMA frame sizes. They combine a compact size with a high torque density afforded by their superior stator design. The result is a package that provides substantial power in a small footprint.

Kinetix TL Servo Motors



Kinetix TL compact motor performance specifications match the Kinetix TLY motor specifications identically, but are available in only metric frame sizes and with high-resolution absolute position encoders. Similar to the Kinetix TLY motors, Kinetix TL compact motors support frame sizes TL-A110, TL-A120, TL-A130, TL-A220, TL-A230, TL-A2530, TL-A2540, and TL-A410 (TL-A310 is not supported).

The Kinetix TL compact motors are equipped with rectangular plastic connectors and are intended for use with Kinetix 3 servo drives.

Kinetix TLY Servo Motors



Kinetix TLY motors are equipped with circular plastic connectors and when used with the Kinetix 2000, Kinetix 6000, or Ultra3000 drives, the Kinetix TLY motors are able to offer the benefits of Kinetix Integrated Motion.

Kinetix TL and TLY Servo Motor Features

Attribute	Value
Main characteristics	• Compact size, high torque density • Metric and NEMA frame sizes • Smart Motor Technology • Low rotor inertia
Features	• 200V-class windings • High-energy Neodymium-Iron-Boron (NeFeB) magnets • Cable extensions, 1 m (3.2 ft) • 17-bit serial communication
Motor type	Brushless AC Synchronous Servo Motors
Environmental rating	IP65 with optional shaft seal
Certifications	Kinetix TL and TLY rotary motors are CE marked for all applicable directives. Refer to http://ab.rockwellautomation.com for more information.
Continuous stall torque	0.086…5.42 N•m (0.76…48 lb•in)
Peak stall torque	0.22…13 N•m (1.94…115 lb•in)
Rated speed	4500, 5000, and 6000 rpm
Motor rated output	0.037…2.0 kW
Compatible servo drives	• Kinetix 5100 (Kinetix TL and TLY) • Kinetix 5300 (Kinetix TL and TLY) • Kinetix 6000 (Kinetix TLY) • Kinetix 300/350 (Kinetix TLY) • Kinetix 3 (Kinetix TL and TLY) • Kinetix 2000 (Kinetix TLY) • Ultra3000 (Kinetix TLY)
Compatible servo cables	• 2090-C*xx*M6*xx* cables (Kinetix TLY) • 2090-DAN*xxx* cables (Kinetix TL)
Typical applications	• Robotics • Material handling • X-Y tables • Specialty machinery • Semiconductor manufacturing • Medical/laboratory equipment • Light packaging machines • Office machinery

Catalog Numbers - Kinetix TL and TLY Servo Motors

Catalog numbers consist of various characters, each of which identifies a specific option for that component. Use the catalog numbering table chart below to understand the configuration of your motor. For questions regarding product availability, contact your Allen-Bradley distributor.

TL x - A xx xx x - x x x x Ax

Factory Options
AA = Standard metric (Kinetix TLY or TL)
AN = NEMA (Kinetix TLY)

Brake
2 = No brake
4 = 24V DC holding brake

Connectors
3 = Cables with rectangular connectors, 300 mm (11.8 in.) for Kinetix TL
6 = Cables with circular connectors, 1 m (39.4 in.) for Kinetix TLY

Enclosure/Shaft Key/Shaft Seal
J = IP65 housing/Shaft key/No shaft seal
K = IP65 housing/No shaft key/No shaft seal

Feedback
B = Multi-turn (1), 17-bit (131,072) counts/revolution, absolute, battery-backed encoder (serial protocol)
H = 2000 lines/revolution, incremental encoder

Rated Speed (2)
M = 4500 rpm
P = 5000 rpm
T = 6000 rpm (Kinetix TLY only)

Magnet Stack Length

Frame Size (2)
1 = 46 mm (1.81 in.) or NEMA 17
2 = 70 mm (2.75 in.) or NEMA 23
25 = 90 mm (3.54 in.) or NEMA 34
3 = 100 mm (3.94 in.) Kinetix TLY only
4 = 115 mm (4.52 in.) Kinetix TL only

Voltage Class
A = 200V

Series Type
Y = (Kinetix TLY)
Blank = (Kinetix TL)

Series
TL = Kinetix TL and TLY compact servo motors

(1) Single-turn if used without battery backup.
(2) Not all combinations are available. Only the configurations for rated speed, as listed in Technical Specifications - Kinetix TL and TLY Servo Motors on page 149, are available. Use Motion Analyzer software to size and select motors for your application.

For Kinetix TL and TLY connector kit catalog numbers, refer to Kinetix Rotary and Linear Motion Cable Specifications Technical Data, publication KNX-TD004.

Kinetix TL and TLY Servo Motor Encoders

Kinetix TL and TLY motors are available with high-resolution or industry standard incremental encoder feedback:

- High-resolution, high performance encoders providing multi-turn absolute position feedback (131,072 counts/revolution) for smooth performance.

  Servo drives compatible with multi-turn absolute position feedback require the appropriate connector kit, with battery, for absolute position backup in the event of a power loss.
- Industry standard incremental encoder feedback (2000 counts/revolution) applies to Kinetix TLY motors.

Motor Connector/Cable Compatibility

Kinetix TL and TLY motors are equipped with either threaded or rectangular plastic connectors.

Kinetix TLY Motor Connectors

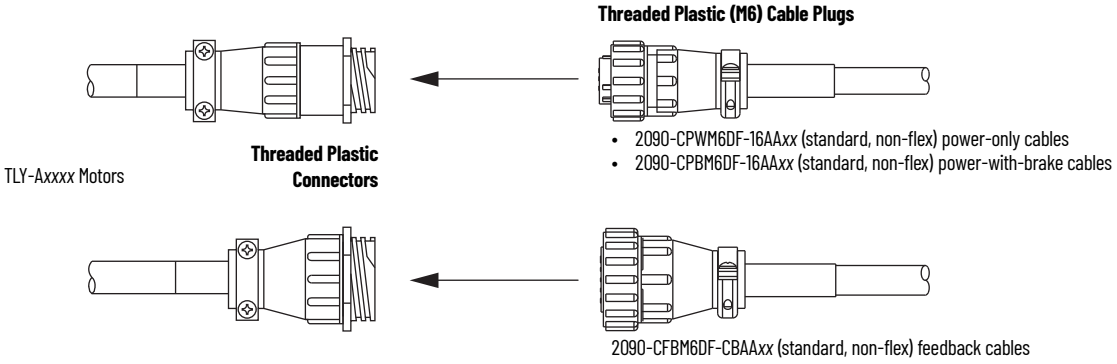

- 2090-CPWM6DF-16AA*xx* (standard, non-flex) power-only cables
- 2090-CPBM6DF-16AA*xx* (standard, non-flex) power-with-brake cables

2090-CFBM6DF-CBAA*xx* (standard, non-flex) feedback cables

Kinetix TL Motor Connectors

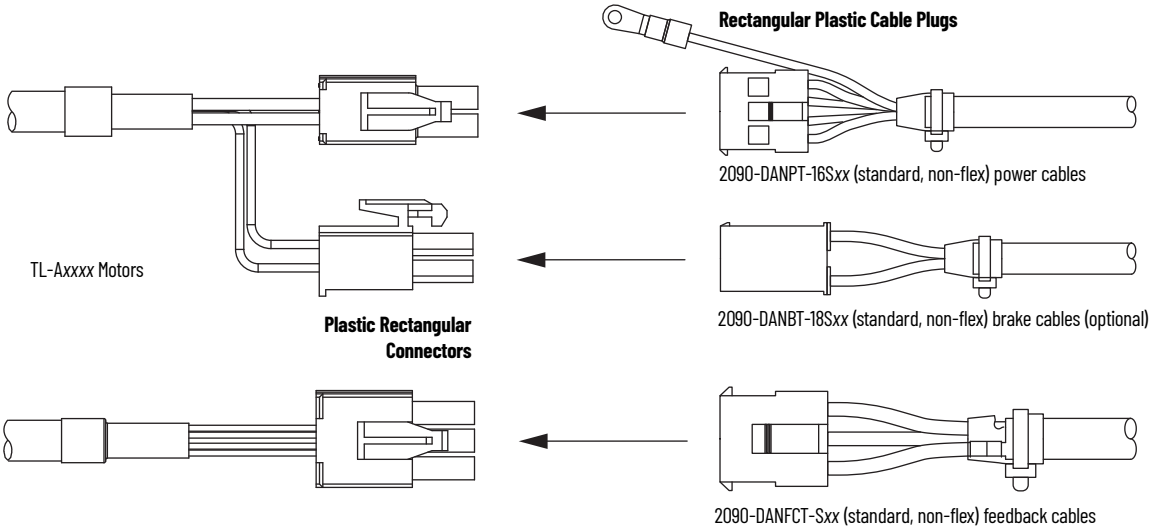

2090-DANPT-16S*xx* (standard, non-flex) power cables

2090-DANBT-18S*xx* (standard, non-flex) brake cables (optional)

2090-DANFCT-S*xx* (standard, non-flex) feedback cables

Kinetix TL and TLY Servo Motor Options

Kinetix TL and TLY servo motors are available with these options:

- 24V DC holding brake.
- Shaft seal kits are available, as are replacement kits for field installation. Lubricant is provided with each kit to reduce wear.

IMPORTANT Shaft seals are subject to wear and require periodic inspection and replacement. Replacement is recommended every 3 months, not to exceed 12 months, depending on use.

Shaft Seal Kit Catalog Numbers

Motor Cat. No.	Shaft Seal Kit Cat. No.
TLY-A1*xx* TL-A1*xx*	TL-SSN-1
TLY-A2*xx* TL-A2*xx*	TL-SSN-2
TLY-A25*xx* TL-A25*xx*	TL-SSN-3
TLY-A3*xx*	
TL-A4*xx*	TL-SSN-4

Transition Plates for N-Series Retrofit

Transition plates provide a means of retrofitting an existing N-Series motor with a Kinetix TLY NEMA motor. In most applications, the Kinetix TLY NEMA motors are physically smaller, but deliver the same torque rating as the N-Series motor it is replacing. Transition plates are not available for the N-56*xx* motors. Select your transition plate catalog number from the table below.

N-Series to Kinetix TLY Transition Plates

Transition Plate Cat. No.	Description	Converts from This N-Series Motor	To This Kinetix TLY NEMA Motor
TL-TRPLAT-17-23	Kinetix TLY Transition Plate, NEMA 17 to 23	N-23*xx*	TLY-A1*xxx*-H*xxx*AN
TL-TRPLAT-23-34	Kinetix TLY Transition Plate, NEMA 23 to 34	N-34*xx*	TLY-A2*xxx*-H*xxx*AN
TL-TRPLAT-34-42	Kinetix TLY Transition Plate, NEMA 34 to 42	N-42*xx*	TLY-A25*xxx*-H*xxx*AN

Technical Specifications - Kinetix TL and TLY Servo Motors

Kinetix TL and TLY (non-brake) Motor Performance Specifications

Motor Cat. No.	Rated Speed rpm	Maximum Speed rpm	Continuous Stall Torque N•m (lb•in)	Peak Stall Torque N•m (lb•in)	Motor Rated Output kW	Rotor Inertia (1) kg-m^2 (lb•in•s^2)
TLY-A110 (2)	5000	6000 (3)	0.096 (0.85)	0.20 (1.75)	0.041	0.000001 (0.0000089)
TL-A110 (2)				0.22 (1.94)		
TLY-A120 TL-A120	5000		0.181 (1.60)	0.36 (3.20)	0.086	0.000002 (0.000018)
TLY-A130 TL-A130	5000		0.325 (2.88)	0.76 (6.70)	0.14	0.000003 (0.000027)
TLY-A220 TL-A220	5000		0.836 (7.40)	1.48 (13.1)	0.35	0.000018 (0.00016)
TLY-A230 TL-A230	5000		1.30 (11.50)	3.05 (27.0)	0.44	0.000034 (0.00030)
TLY-A2530 TL-A2530	4400	5000	2.60 (23.0)	5.20 (46.0)	0.69	0.000098 (0.00087)
TLY-A2540 TL-A2540	4575		2.94 (26.0)	7.10 (63.0)	0.86	0.00011 (0.00096)
TLY-A310	4000	4500	3.61 (32.0)	9.0 (80.0)	0.95	0.00015 (0.0013)
TL-A410 (2)	4500		5.42 (48.0)	13.00 (115)	2.0	0.00036 (0.0032)

(1) Refer to Kinetix TL and TLY Motor Weight Specifications on page 150 for brake motor weight.
(2) The TLY/TL-A110 and TL-A410 motors are available in only metric frame sizes. All other motors are available in metric and NEMA frame sizes.
(3) Applies to TLY-A*xxx*T-H motors with incremental feedback. The TLY/TL-A*xxx*P-B motors with absolute high-resolution encoders are rated at 5000 rpm.

Kinetix TL and TLY (brake) Motor Performance Specifications

Motor Cat. No.	Rated Speed rpm	Maximum Speed rpm	Continuous Stall Torque N•m (lb•in)	Peak Stall Torque N•m (lb•in)	Motor Rated Output kW	Rotor Inertia (1) kg-m^2 (lb•in•s^2)
TLY-A110 (2)	5000	6000 (3)	0.086 (0.76)	0.20 (1.75)	0.037	0.000004 (0.000035)
TL-A110 (2)				0.22 (1.94)		
TLY-A120 TL-A120	5000		0.163 (1.44)	0.36 (3.20)	0.077	0.000005 (0.000044)
TLY-A130 TL-A130	5000		0.293 (2.59)	0.76 (6.70)	0.13	0.000006 (0.000053)
TLY-A220 TL-A220	5000		0.757 (6.70)	1.48 (13.1)	0.24	0.000028 (0.00025)
TLY-A230 TL-A230	4250		1.16 (10.3)	3.05 (27.0)	0.32	0.000044 (0.00039)
TLY-A2530 TL-A2530	3650	5000	2.60 (23.0)	5.20 (46.0)	0.55	0.00012 (0.0011)
TLY-A2540 TL-A2540	3750		2.94 (26.0)	7.10 (63.0)	0.66	0.00013 (0.0012)
TLY-A310	3900	4500	3.61 (32.0)	9.0 (80.0)	0.90	0.00017 (0.0017)
TL-A410 (2)	4500		4.86 (43.0)	13.0 (115)	1.80	0.00041 (0.0036)

(1) Refer to Kinetix TL and TLY Motor Weight Specifications on page 150 for brake motor weight.
(2) The TLY/TL-A110 and TL-A410 motors are available in only metric frame sizes. All other motors are available in metric and NEMA frame sizes.
(3) Applies to TLY-A*xxx*T-H motors with incremental feedback. The TLY/TL-A*xxx*P-B motors with absolute high-resolution encoders are rated at 5000 rpm.

Kinetix TL and TLY Motor Weight Specifications

Motor Cat. No.	High Resolution Feedback Option Kinetix TLY/TL-A*xxxx*-B Motors		Incremental Feedback Option Kinetix TLY-A*xxxx*-H Motors	
	Motor Weight, approx kg (lb)	**Brake Motor Weight, approx** kg (lb)	**Motor Weight, approx** kg (lb)	**Brake Motor Weight, approx** kg (lb)
TLY-A110 TL-A110	0.29 (0.64)	0.55 (1.2)	0.29 (0.64)	0.55 (1.2)
TLY-A120 TL-A120	0.34 (0.75)	0.59 (1.3)	0.35 (0.78)	0.59 (1.3)
TLY-A130 TL-A130	0.46 (1.0)	0.68 (1.5)	0.50 (1.1)	0.68 (1.5)
TLY-A220 TL-A220	0.95 (2.1)	1.4 (3.0)	1.1 (2.4)	1.5 (3.4)
TLY-A230 TL-A230	1.4 (3.0)	1.8 (4.0)	1.5 (3.3)	2.0 (4.4)
TLY-A2530 TL-A2530	2.3 (5.0)	3.2 (7.0)	2.3 (5.1)	3.2 (7.0)
TLY-A2540 TL-A2540	2.6 (5.7)	3.5 (7.7)	2.6 (5.8)	3.5 (7.7)
TLY-A310	3.9 (8.6)	4.5 (10.0)	3.9 (8.6)	4.5 (10.0)
TL-A410	5.5 (12.0)	6.80 (15.0)	5.5 (12.0)	6.80 (15.0)

Kinetix TL and TLY Motor Brake Specifications

Motor Cat. No.	Backlash, max (brake engaged) arc minutes	Holding Torque N•m (lb•in)	Coil Current at 24V DC A	Brake Response Time		
				Release ms	Engage (1)	
					MOV ms	**Diode** ms
TLY-A110 TL-A110	60	0.32 (2.8)	0.18…0.22	21	7	40
TLY-A120 TL-A120						
TLY-A130 TL-A130						
TLY-A220 TL-A220		1.24 (11.0)	0.333…0.407	22	13	73
TLY-A230 TL-A230						
TLY-A2530 TL-A2530		2.5 (22.0)	0.351…0.429	42	14	86
TLY-A2540 TL-A2540						
TLY-A310						
TL-A410		9.3 (82.0)	0.648…0.792	69	20	84

(1) By using an arc suppression device in external control circuit.

Kinetix TL and TLY Motor Load Force Ratings

Kinetix TL and TLY servo motors are capable of operating with the maximum radial or maximum axial shaft loads listed in the following tables. Radial loads listed are applied in the middle of the shaft extension. The tables below represent an L_{10} bearing fatigue life of 20,000 hours. This 20,000-hour life does not account for possible application-specific life reduction that can occur due to bearing grease contamination from external sources. Maximum operating speed is limited by motor winding.

Load Forces on Shaft

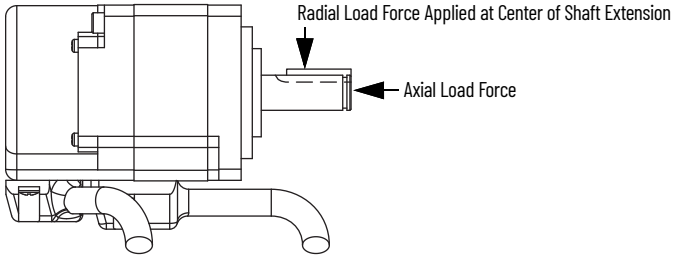

Radial Load Force Ratings

Motor Cat. No.	**1000 rpm** kg (lb)	**2000 rpm** kg (lb)	**3000 rpm** kg (lb)	**4000 rpm** kg (lb)	**4500 rpm** kg (lb)	**5000 rpm** kg (lb)	**6000 rpm** kg (lb)
TLY-A110 TL-A110	11 (24)	9 (19)	7 (16)	7 (16)	–	6 (13)	6 (13)
TLY-A120 TL-A120	12 (26)	10 (21)	8 (18)	7 (16)	–	7 (15)	6 (13)
TLY-A130 TL-A130	13 (29)	10 (23)	9 (20)	8 (18)	–	8 (17)	7 (15)
TLY-A220 TL-A220	27 (60)	22 (48)	19 (42)	17 (37)	–	16 (35)	15 (33)
TLY-A230 TL-A230	31 (68)	24 (54)	21 (47)	19 (42)	–	18 (40)	17 (37)
TLY-A2530 TL-A2530	48 (106)	38 (84)	34 (74)	–	–	28 (62)	–
TLY-A2540 TL-A2540	50 (110)	39 (87)	34 (76)	–	–	29 (64)	–
TLY-A310	80 (177)	63 (139)	56 (123)	–	48 (106)	–	–
TL-A410	76 (168)	60 (133)	53 (117)	–	44 (98)	–	–

Axial Load Force Ratings (maximum radial load)

Motor Cat. No.	1000 rpm kg (lb)	2000 rpm kg (lb)	3000 rpm kg (lb)	4000 rpm kg (lb)	4500 rpm kg (lb)	5000 rpm kg (lb)	6000 rpm kg (lb)
TLY-A110 TL-A110	8 (18)	6 (13)	5 (11)	4 (9)	–	4 (9)	3 (7)
TLY-A120 TL-A120	9 (20)	7 (16)	5 (11)	4 (9)	–	4 (9)	3 (7)
TLY-A130 TL-A130	10 (22)	8 (17)	6 (13)	5 (12)	–	5 (11)	4 (9)
TLY-A220 TL-A220	15 (33)	11 (24)	9 (20)	8 (17)	–	7 (16)	5 (11)
TLY-A230 TL-A230	15 (33)	12 (26)	10 (21)	9 (20)	–	8 (17)	6 (13)
TLY-A2530 TL-A2530	18 (39)	13 (29)	11 (24)	–	–	9 (19)	–
TLY-A2540 TL-A2540	18 (39)	13 (29)	11 (25)	–	–	9 (20)	–
TLY-A310	19 (42)	14 (31)	11 (25)	–	10 (21)	–	–
TL-A410	29 (64)	21 (47)	18 (40)	–	14 (31)	–	–

Axial Load Force Ratings (zero radial load)

Motor Cat. No.	1000 rpm kg (lb)	2000 rpm kg (lb)	3000 rpm kg (lb)	4000 rpm kg (lb)	4500 rpm kg (lb)	5000 rpm kg (lb)	6000 rpm kg (lb)
TLY-A110 TL-A110	12 (26)	9 (20)	7 (16)	6 (13)	–	6 (13)	5 (11)
TLY-A120 TL-A120	12 (26)	9 (20)	7 (16)	6 (13)	–	6 (13)	5 (11)
TLY-A130 TL-A130	12 (26)	9 (20)	7 (16)	6 (13)	–	6 (13)	5 (11)
TLY-A220 TL-A220	19 (41)	14 (30)	11 (25)	10 (21)	–	9 (20)	8 (17)
TLY-A230 TL-A230	19 (41)	14 (30)	11 (25)	10 (21)	–	9 (20)	8 (17)
TLY-A2530 TL-A2530	23 (50)	17 (37)	14 (31)	–	–	11 (25)	–
TLY-A2540 TL-A2540	23 (50)	17 (37)	14 (31)	–	–	11 (25)	–
TLY-A310	26 (57)	19 (42)	16 (35)	–	14 (31)	–	–
TL-A410	34 (75)	25 (55)	21 (47)	–	17 (37)	–	–

Dimensions - Kinetix TL and TLY Servo Motors

TLY-A*xxxxx*-*xx*6*x*AA or TL-A*xxxxx*-B*x*3*x*AA Motor Dimensions

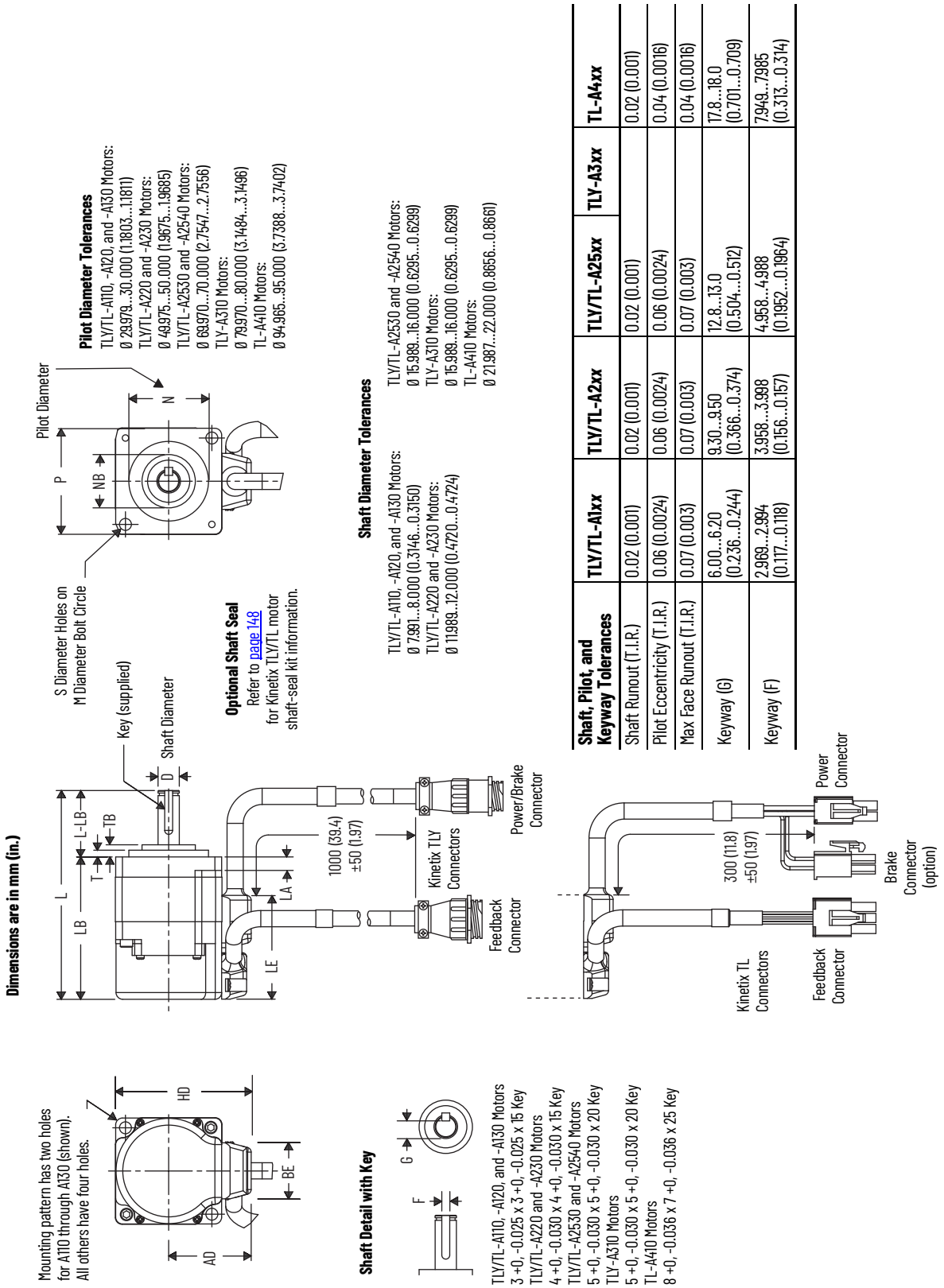

Shaft, Pilot, and Keyway Tolerances	TLY/TL-A1xx	TLY/TL-A2xx	TLY/TL-A25xx	TLY-A3xx	TL-A4xx
Shaft Runout (T.I.R.)	0.02 (0.001)	0.02 (0.001)	0.02 (0.001)		0.02 (0.001)
Pilot Eccentricity (T.I.R.)	0.06 (0.0024)	0.06 (0.0024)	0.06 (0.0024)		0.04 (0.0016)
Max Face Runout (T.I.R.)	0.07 (0.003)	0.07 (0.003)	0.07 (0.003)		0.04 (0.0016)
Keyway (G)	6.00...6.20 (0.236...0.244)	9.30...9.50 (0.366...0.374)	12.8...13.0 (0.504...0.512)		17.8...18.0 (0.701...0.709)
Keyway (F)	2.969...2.994 (0.117...0.118)	3.958...3.988 (0.156...0.157)	4.958...4.988 (0.1952...0.1964)		7.949...7.985 (0.313...0.314)

TLY-A*xxxxx*-*xx*6xAA or TL-A*xxxxx*-B*x*3xAA Motor Dimensions

Motor Cat. No.	AD mm (in.)	BE mm (in.)	D (1) mm (in.)	HD mm (in.)	L (2) mm (in.)	L-LB (3) mm (in.)	LA mm (in.)	LB (2) mm (in.)	LE (2) mm (in.)	M mm (in.)	N (1) mm (in.)	NB mm (in.)	P mm (in.)	S mm (in.)	T mm (in.)	TB mm (in.)	G (1) mm (in.)	F (1) mm (in.)
TLY/TL-A110	31.1 (1.22)	21.0 (0.83)	8.0 (0.31)	51.1 (2.01)	78.5 (3.09)	25.0 (0.98)	5.0 (0.20)	53.5 (2.11)	39.1 (1.54)	46.0 (1.81)	30.0 (1.18)	20.0 (0.79)	40.0 (1.57)	4.5 (0.18)	2.5 (0.10)	4.5 (0.18)	6.2 (0.24)	3.0 (0.12)
TLY/TL-A120					84.5 (3.33)			59.5 (2.34)										
TLY/TL-A130					98.5 (3.88)			73.5 (2.89)										
TLY/TL-A220	43.0 (1.69)	27.6 (1.09)	12.0 (0.47)	73.0 (2.87)	106.1 (4.18)	30.0 (1.18)	6.0 (0.24)	76.1 (3.00)	42.8 (1.69)	70.0 (2.76)	50.0 (1.97)	27.0 (1.06)	60.0 (2.36)	5.5 (0.22)	3.0 (0.12)	7.0 (0.28)	9.5 (0.37)	4.0 (0.16)
TLY/TL-A230					128.0 (5.04)			98.1 (3.86)										
TLY/TL-A2530	53.0 (2.09)	27.6 (1.09)	16.0 (0.63)	93.0 (3.66)	134.7 (5.30)	35.0 (1.38)	8.0 (0.32)	99.7 (3.93)	43.8 (1.72)	90.0 (3.54)	70.0 (2.76)	34.0 (1.34)	80.0 (3.15)	6.6 (0.26)	3.0 (0.12)	7.0 (0.28)	13.0 (0.51)	5.0 (0.20)
TLY/TL-A2540					143.7 (5.66)			108.7 (4.28)										
TLY-A310	56.0 (2.20)			99.0 (3.90)	179.2 (7.06)			144.2 (5.68)	57.1 (2.24)	100.0 (3.94)	80.0 (3.15)		86.0 (3.39)					
TL-A410	67.0 (2.64)	38.4 (1.51)	22.0 (0.87)	117.0 (4.61)	216.0 (8.50)	40.0 (1.57)	17.0 (0.67)	176.0 (6.93)	102.0 (4.02)	115.0 (4.53)	95.0 (3.74)	N/A	100.0 (3.94)	9.0 (0.35)	7.0 (0.28)	N/A	18.0 (0.71)	8.0 (0.32)

(1) For keyway, shaft diameter, and pilot diameter tolerances, refer to page 153.
(2) If ordering an TLY/TL-A110, TLY/TL-A120 or TLY/TL-A130 motor with brake, add 35.6 mm (1.40 in.) to dimensions L, LB, and LE.
If ordering an TLY/TL-A220 or TLY/TL-A230 motor with brake, add 34.6 mm (1.36 in.) to dimensions L, LB, and LE.
If ordering an TLY/TL-A2530 or TLY/TL-A2540 motor with brake, add 36.6 mm (1.44 in.) to dimensions L, LB, and LE.
If ordering an TLY-A310 motor with brake, add 23.0 mm (0.90 in.) to dimensions L, LB, and LE.
If ordering an TL-A410 motor with brake, add 32.0 mm (1.26 in.) to dimensions L, LB, and LE.
(3) Tolerance for this dimension is ±1.0 mm (±0.039 in.).

Motors are designed to metric dimensions. Inch dimensions are approximate conversions from millimeters. Dimensions without tolerances are for reference.

Kinetix TLY NEMA Servo Motor Dimensions

TLY-A*xxxxx*-Hx6xAN NEMA Motor Dimensions

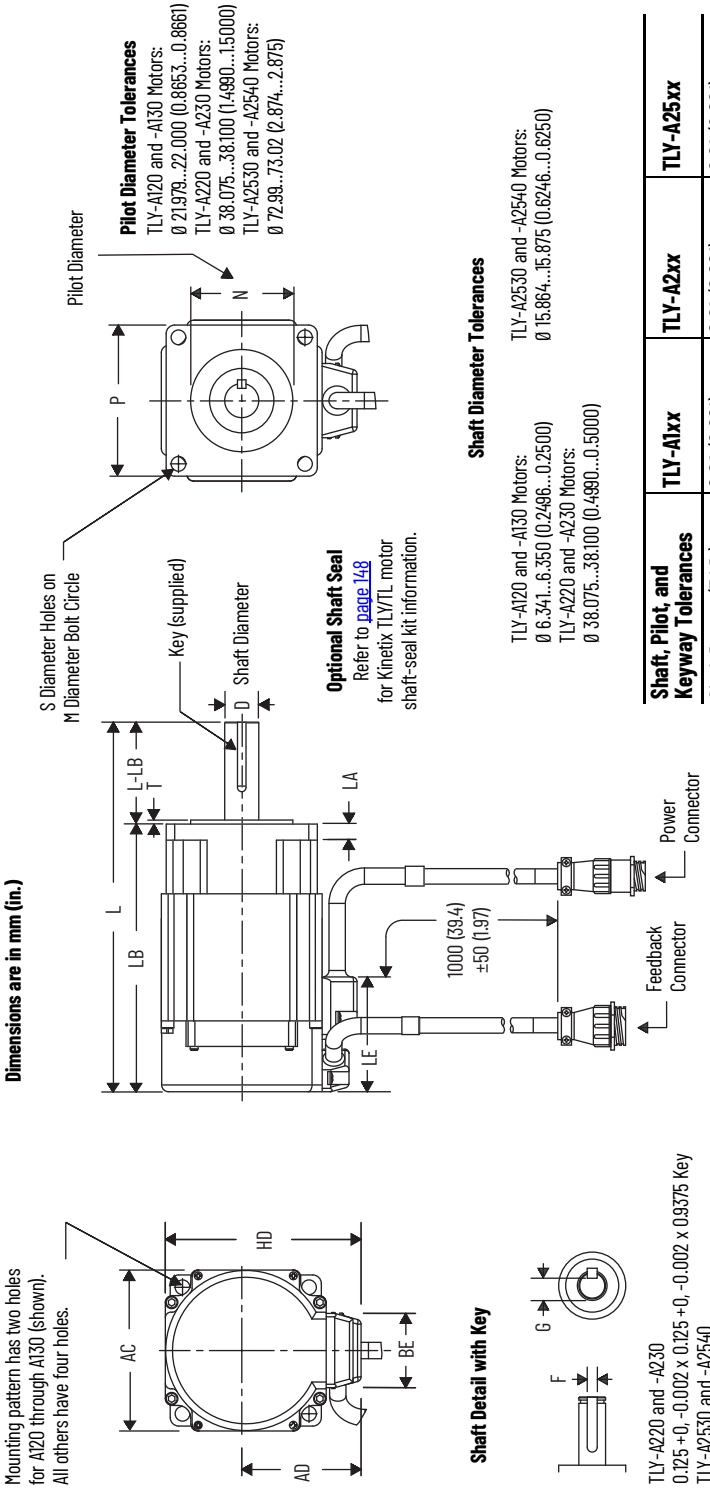

Shaft, Pilot, and Keyway Tolerances	TLY-A1*xx*	TLY-A2*xx*	TLY-A25*xx*
Shaft Runout (T.I.R.)	0.02 (0.001)	0.02 (0.001)	0.02 (0.001)
Pilot Eccentricity (T.I.R.)	0.06 (0.0024)	0.06 (0.0024)	0.06 (0.0024)
Max Face Runout (T.I.R.)	0.07 (0.003)	0.07 (0.003)	0.07 (0.003)
Keyway (G)	N/A	10.54...10.92 (0.415...0.430)	12.75...13.13 (0.502...0.517)
Keyway (F)	N/A	3.124...3.175 (0.123...0.125)	4.763...4.814 (0.1875...0.1895)

TLY-Axxxxx-Hx6xAN NEMA Motor Dimensions

Motor Cat. No.	AC mm (in.)	AD mm (in.)	BE mm (in.)	D (1) mm (in.)	HD mm (in.)	L (2) mm (in.)	L-LB (3) mm (in.)	LA mm (in.)	LB (2) mm (in.)	LE (2) mm (in.)	M mm (in.)	N (1) mm (in.)	P mm (in.)	S mm (in.)	T mm (in.)	G (1) mm (in.)	F (1) mm (in.)
TLY-A120	N/A	31.10 (1.22)	21.0 (0.83)	6.35 (0.25)	52.0 (2.05)	91.5 (3.603)	27.0 (1.06)	5.0 (0.20)	64.5 (2.54)	39.1 (1.54)	43.8 (1.725)	22.0 (0.86)	42.0 (1.65)	8-32 Thread	2.0 (0.08)	N/A	N/A
TLY-A130						105.5 (4.153)			78.5 (3.09)								
TLY-A220	60 (2.36)	43.0 (1.69)	27.6 (1.09)	12.70 (0.50)	73.0 (2.87)	137.9 (5.43)	38.1 (1.50)	6.0 (0.24)	99.8 (3.93)	43.3 (1.70)	66.7 (2.625)	38.1 (1.50)	56.4 (2.22)	5.5 (0.217)	1.5 (0.06)	10.92 (0.43)	3.175 (0.125)
TLY-A230						159.9 (6.30)			121.8 (4.80)								
TLY-A2530	N/A	53.0 (2.09)		15.875 (0.625)	96.0 (3.78)	149.2 (5.872)	44.5 (1.752)	8.0 (0.32)	104.7 (4.12)	43.8 (1.72)	98.4 (3.875)	73.02 (2.87)	86.0 (3.39)	5.5 (0.217)	1.5 (0.06)	13.13 (0.517)	4.814 (0.189)
TLY-A2540						158.2 (6.205)			113.7 (4.48)								

(1) For keyway, shaft diameter, and pilot diameter tolerances, refer to page 155.
(2) If ordering an TLY-A120 or TLY-A130 motor with brake, add 35.6 mm (1.40 in.) to dimensions L, LB, and LE.
If ordering an TLY-A220 or TLY-A230 motor with brake, add 34.6 mm (1.36 in.) to dimensions L, LB, and LE.
If ordering an TLY-A2530 or TLY-A2540 motor with brake, add 36.6 mm (1.44 in.) to dimensions L, LB, and LE.
(3) Tolerance for this dimension is ±1.0 mm (±0.039 in.).

NEMA motor flanges and shafts are designed to inch dimensions. Other frame areas are designed to metric dimensions. Conversions are approximate values.

Kinetix RDB Direct-drive Servo Motors



Kinetix RDB servo motor design provides direct-coupling to the load, thus improving system performance and efficiency by eliminating the need for inefficient mechanical power transmission devices, such as gearboxes, timing belts and pulleys. The Kinetix RDB servo motors incorporate a bearingless housed configuration designed for applications where the load is already supported by its own bearings.

Kinetix RDB Servo Motor Features

Attribute	Value
Main characteristics	• Direct coupling to the load • Smart Motor Technology • Heidenhain (EnDat analog) encoder protocol • Bearingless housed configuration
Features	• 400V-class windings • Single-turn and multi-turn absolute feedback • Multiple winding speed options • SpeedTec DIN connectors, rotates 180° • Standard IEC 72-1 mounting dimensions
Motor type	Direct-drive rotary servo motor
Environmental rating	IP65 with use of Rockwell Automation factory-delivered Kinetix 2090 cables
Certifications	Kinetix RDB rotary motors are UL Recognized components to applicable UL and CSA standards. CE marked for all applicable directives. Refer to rok.auto/certifications for the Product Certifications website.
Continuous stall torque	32.7…426 N•m (289…3770 lb•in)
Peak stall torque	86.5…1050 N•m (766…9293 lb•in)
Rated speed	Rated speeds between 177…1836 rpm
Motor rated output	1.97…8.69 kW
Compatible servo drives	• Kinetix 5700 • Kinetix 6200/6500 • Kinetix 6000 • Kinetix 7000
Compatible servo cables	2090-C*xx*M7*xx* cables
Typical applications	• Use to replace mechanical gear reduction (gear boxes, belts, pulleys) • Tight space constraints • Axes with high-power and high-performance requirements

Catalog Numbers - Kinetix RDB Servo Motors

Catalog numbers consist of various characters, each of which identifies a specific option for that component. Use the catalog numbering table chart below to understand the configuration of your motor. For questions regarding product availability, contact your Allen-Bradley distributor.

RD B - B xxx x x - x B 7 2 AA

Factory Options
AA = Standard

Brake
2 = No brake

Connectors
7 = Circular (SpeedTec) DIN connector, right angle, 180° rotatable

Enclosure/Shaft
B = IP65 housing/Blind bore

Feedback
7 = Multi-turn, 2048 sin/cos, absolute encoder (EnDat protocol)
3 = Single-turn, 2048 sin/cos, absolute encoder (EnDat protocol)

Base Speed (1) (2)
4 = 200 rpm
5 = 250 rpm
6 = 375 rpm
8 = 625 rpm
9 = 750 rpm
C = 1500 rpm

Magnet Stacks (1)
1 = 1 stack
2 = 2 stacks
3 = 3 stacks
4 = 4 stacks

Frame Size - Bolt Circle Diameter (BCD)
215 = 215 mm
290 = 290 mm
410 = 410 mm

Voltage Class
B = 400V

Housing Type
B = Bearingless housing

Series
RD = Rotary direct drive servo motor

(1) Not all combinations are available. Only the configurations for rated speed and magnet stacks, as listed in Kinetix RDB Servo motor Performance Specifications on page 160, are available. Use Motion Analyzer software to size and select motors for your application.
(2) Base speed equals maximum speed at peak torque. Maximum speed is servo drive dependent.

Kinetix RDB Servo Motor High-resolution Encoders

Kinetix RDB servo motors are available with high performance encoders with a choice of single-turn (-3) or multi-turn (-7) high-resolution feedback:

- Up to 4 million counts per revolution (-3 and -7) for smooth performance.
- Single-turn encoder provides high-resolution absolute position feedback within one turn.
- Multi-turn encoder provides high-resolution absolute position feedback within 4096 turns. The electromechanical design does not require a battery.

Feedback Connector Kit Compatibility

Servo Drive System	Connector Kit Cat. No.
Kinetix 5700	2198-K57CK-D15M
• Kinetix 6200 • Kinetix 6500	2090-K6CK-D15M
Kinetix 6000	2090-K6CK-KENDAT
Kinetix 7000	2090-K7CK-KENDAT

Motor Connector/Cable Compatibility

Kinetix RDB servo motors are equipped with SpeedTec DIN connectors, however, EnDat encoder feedback requires the additional conductors included in the cables listed.

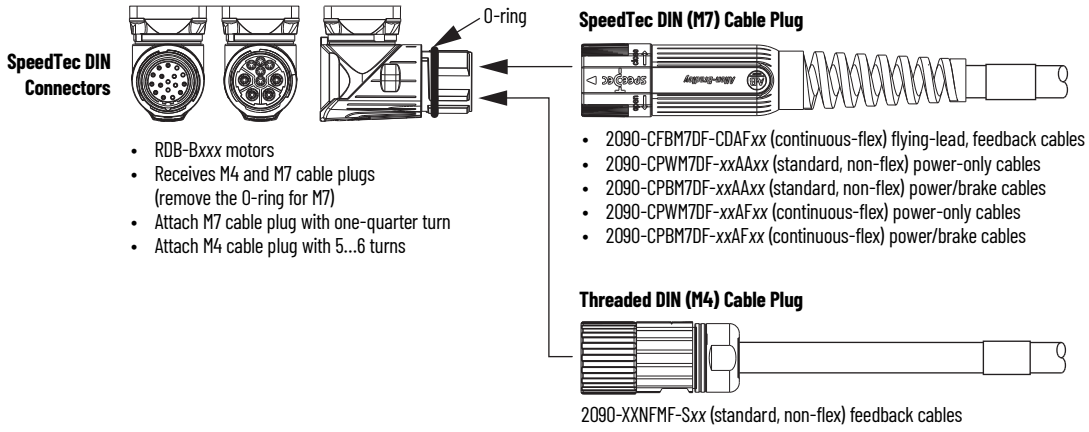

Technical Specifications - Kinetix RDB Servo Motors

Kinetix RDB Servo motor Performance Specifications

Motor Cat. No.	Base Speed rpm	Rated Speed rpm	Maximum Speed rpm	Continuous Stall Torque N•m (lb•in)	Peak Stall Torque N•m (lb•in)	Motor Rated Output kW	Rotor Inertia kg-m^2 (lb•in•s^2)	Motor Weight, approx kg (lb)
RDB-B21519	750	1235	1235	32.7 (289)	86.5 (766)	3.64	0.0094 (0.083)	19.1 (42)
RDB-B2151C	1500	2125	2125			5.23		
RDB-B21529	750	1035	1035	45.4 (402)	116 (1027)	4.33	0.0126 (0.112)	24.5 (54)
RDB-B2152C	1500	2125	2125			6.41		
RDB-B21539	750	1250	1250	53.7 (475)	143 (1266)	5.34	0.0157 (0.139)	29.5 (65)
RDB-B2153C	1500	1772	2250			5.87		
RDB-B29014	200	391	450	49.2 (435)	110 (974)	1.97	0.028 (0.25)	28.6 (63)
RDB-B29016	375	729	785			3.18		
RDB-B29019	750	1128	1500			3.63		
RDB-B29024	200	413	435	98.0 (867)	214 (1894)	3.33	0.047 (0.42)	42.7 (94)
RDB-B29026	375	632	885			4.05		
RDB-B29029	750		1200					
RDB-B29034	200	493	500	140 (1239)	318 (2815)	5.16	0.066 (0.58)	55.4 (122)
RDB-B29036	375	646	750			5.49		
RDB-B29039	750	578	1000	122 (1080)	318 (2815)	4.41		
RDB-B41014	200	360	385	183 (1620)	340 (3009)	5.20	0.123 (1.09)	67.6 (149)
RDB-B41016	375	440	700			4.83		
RDB-B41018	625		700					
RDB-B41024	200	350	365	332 (2938)	690 (6107)	7.29	0.225 (1.99)	108 (238)
RDB-B41026	375		600	308 (2726)				
RDB-B41035	250	361	490	426 (3770)	1050 (9293)	8.69	0.302 (2.67)	136 (300)

Dimensions - Kinetix RDB Servo Motors

RDB-B215xx Motor Dimensions

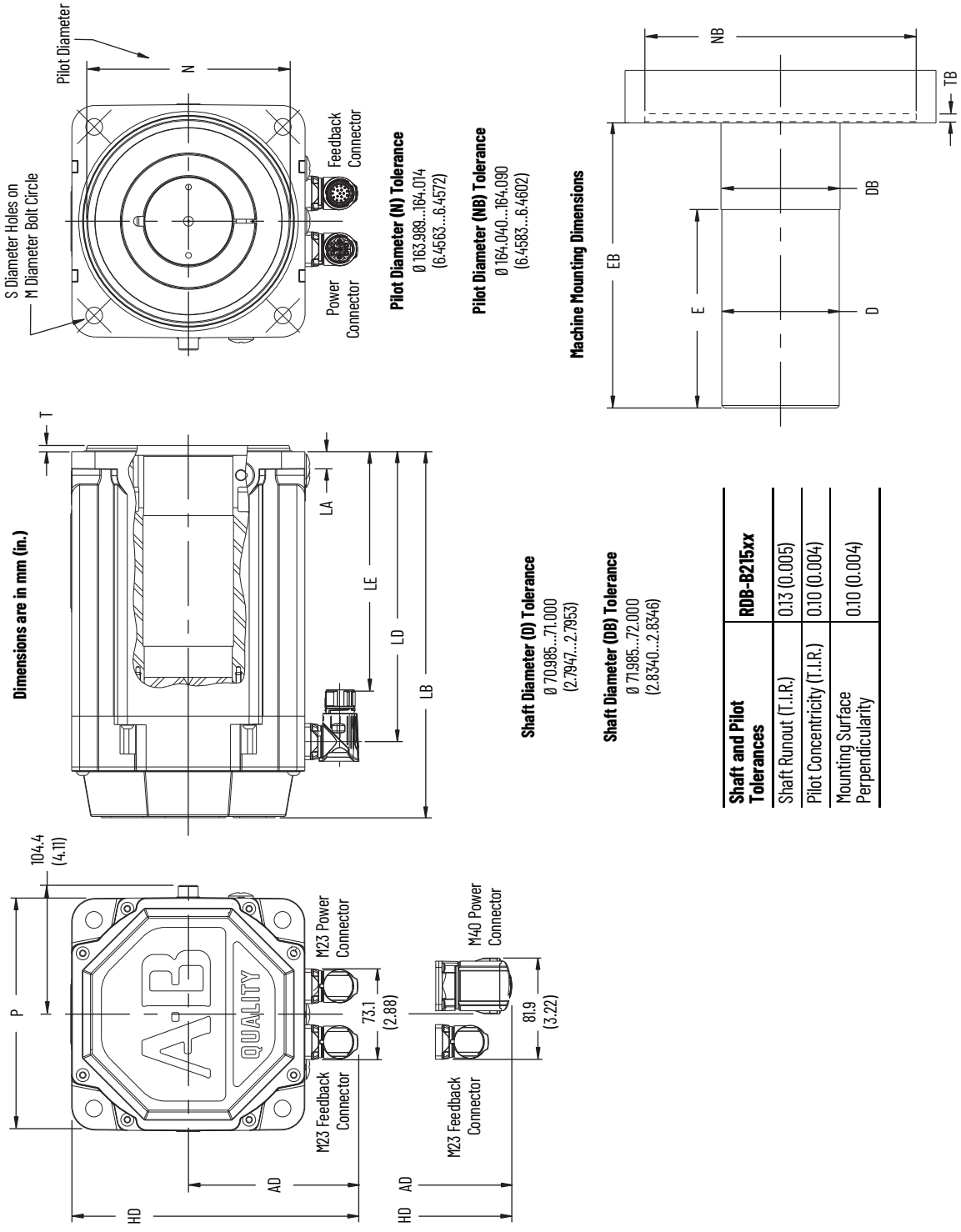

Shaft and Pilot Tolerances	RDB-B215xx
Shaft Runout (T.I.R.)	0.13 (0.005)
Pilot Concentricity (T.I.R.)	0.10 (0.004)
Mounting Surface Perpendicularity	0.10 (0.004)

RDB-B215xx Motor Dimensions

Motor Cat. No.	AD (1) mm (in.)	HD (1) mm (in.)	T mm (in.)	LA mm (in.)	LD mm (in.)	LE mm (in.)	LB (2) mm (in.)	D mm (in.)	DB mm (in.)	E (3) mm (in.)	EB (4) mm (in.)	TB mm (in.)	M mm (in.)	S (5) mm (in.)	N mm (in.)	NB mm (in.)	P mm (in.)
RDB-B2151	136.7 (5.38)	230.9 (9.09)	5.0 (0.197)	14.0 (0.55)	166 (6.52)	124 (4.90)	226 (8.90)	71.0 (2.795)	72.0 (2.834)	49.0 (1.93)	104 (4.09)	5.5 (0.22)	215 (8.465)	13.50 (0.5315)	164 (6.456)	164 (6.459)	189 (7.44)
RDB-B2152					200 (7.86)	158 (6.24)	260 (10.24)			83.0 (3.27)	138 (5.43)						
RDB-B2153					234 (9.20)	192 (7.58)	294 (11.58)			117 (4.61)	172 (6.77)						

(1) Dimension is for motor with M23 power connector. For motor with M40 power connector, add 18.6 (0.73 in.).
(2) Tolerance for this dimension is ±0.52 mm (±0.02 in.).
(3) Tolerance for this dimension is ±0.40 mm (±0.015 in.).
(4) Tolerance for this dimension is ±1.50 mm (±0.06 in.) static, ±0.13 mm (±0.005 in.) dynamic.
(5) Tolerance for this dimension is +0.430, -0.000 mm (+0.0169, -0.0000 in.).

Power Connectors on Kinetix RDB Servo Motors		Motor Cat. No.
M23 Power Connector		RDB-B21519, RDB-B21529, RDB-B2151C, RDB-B21539, RDB-B2152C
M40 Power Connector		RDB-B2153C

Motors are designed to metric dimensions. Inch dimensions are approximate conversions from millimeters. Dimensions without tolerances are for reference.

RDB-B290*xx* and RDB-B410*xx* Motor Dimensions

Shaft, Pilot, and Keyway Tolerances	RDB-B290*xx*	RDB-B410*xx*
Shaft Runout (T.I.R.)	0.038 (0.0015)	
Pilot Concentricity (T.I.R.)	0.05 (0.002)	
Mounting Surface Perpendicularity	0.05 (0.002)	
Keyway Depth (G)	24.80…24.99 (0.976…0.984)	29.80…29.99 (1.173…1.181)
Keyway Depth (GD)	7.90…8.00 (0.311…0.315)	
Keyway Width (F)	11.957…12.000 (0.4707…0.4724)	

Dimensions are in mm (in.)

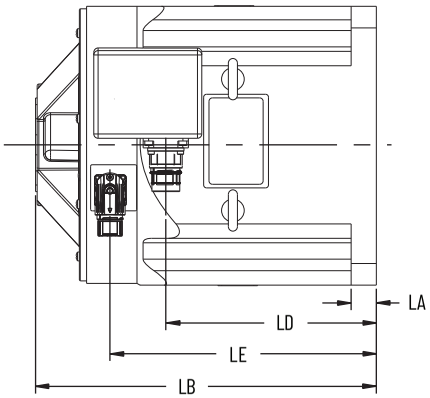

RDB-B290*xx* and RDB-B410*xx* motors have either M23 or M40 power connectors, with no significant difference in dimensions.

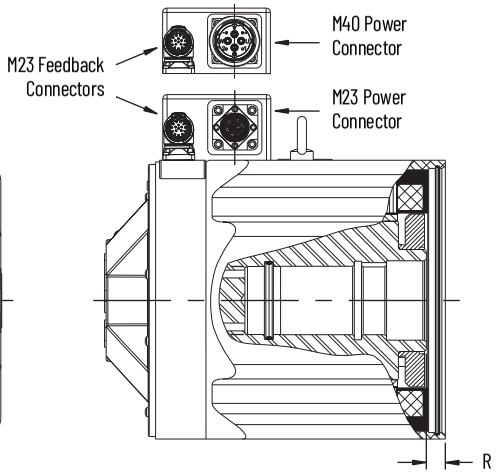

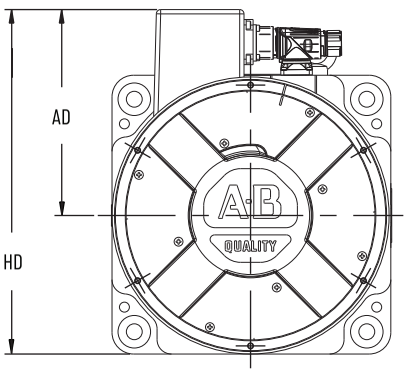

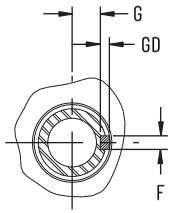

Shaft Key Detail

Machine Mounting Dimensions

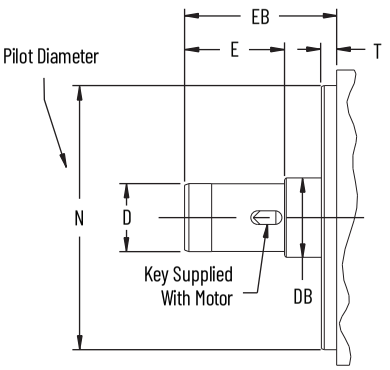

Shaft Diameter (D) Tolerance

RDB-B290*xx* Motors:
Ø 59.988…59.999 (2.3617…2.3622)
RDB-B410*xx* Motors:
Ø 69.988…69.999 (2.7554…2.7559)

Shaft Diameter (DB) Tolerance

RDB-B290*xx* Motors:
Ø 69.988…69.999 (2.7554…2.7559)
RDB-B410*xx* Motors:
Ø 79.988…79.999 (3.1491…3.1496)

Pilot Diameter Tolerance

RDB-B290*xx* Motors:
Ø 232.92…232.96 (9.170…9.172)
RDB-B410*xx* Motors:
Ø 333.94…333.98 (13.147…13.149)

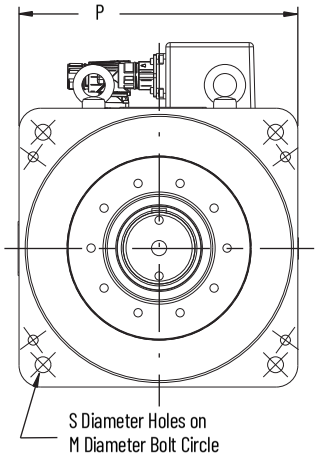

RDB-B290*xx* and RDB-B410*xx* Motor Dimensions

Motor Cat. No.	AD mm (in.)	HD mm (in.)	T mm (in.)	LA (1) mm (in.)	LD mm (in.)	LE mm (in.)	LB (2) mm (in.)	D mm (in.)	DB mm (in.)	E (3) mm (in.)	EB (4) mm (in.)	M mm (in.)	S mm (in.)	N mm (in.)	P (5) mm (in.)	G mm (in.)	GD mm (in.)	F mm (in.)
RDB-B2901	182.3 (7.18)	305.9 (12.05)	13.5 (0.53)	22.2 (0.88)	86.5 (3.40)	136 (5.34)	201 (7.92)	59.9 (2.362)	69.9 (2.755)	43.94 (1.730)	88.92 (3.540)	290 (11.417)	14.0 (0.551)	232.9 (9.17)	245.9 (9.68)	24.99 (0.984)	8.00 (0.315)	12.0 (0.472)
RDB-B2902					136 (5.36)	185 (7.30)	251 (9.90)			88.14 (3.470)	134.11 (5.280)							
RDB-B2903					186 (7.31)	235 (9.25)	301 (11.83)			124.7 (4.910)	170.69 (6.720)							
RDB-B4101	256.3 (10.09)	432.1 (17.01)	17.8 (0.70)	25.4 (1.00)	105 (4.14)	164 (6.46)	230 (9.05)	69.9 (2.755)	79.9 (3.149)	40.39 (1.590)	114.05 (4.490)	410 (16.142)	17.5 (0.689)	333.9 (13.14)	350.0 (13.78)	29.99 (1.181)	8.00 (0.315)	12.0 (0.472)
RDB-B4102					174 (6.86)	233 (9.18)	300 (11.77)			83.82 (3.300)	167.89 (6.610)							
RDB-B4103					243 (9.58)	302 (11.90)	368 (14.49)			118.62 (4.670)	253.49 (9.980)							

(1) Tolerance for this dimension is ±2.15 mm (±0.085 in.).
(2) Tolerance for this dimension is ±2.30 mm (±0.09 in.).
(3) Tolerance for this dimension is ±0.13 mm (±0.005 in.).
(4) Tolerance for this dimension is ±1.50 mm (±0.060 in.) static, ±0.05 mm (±0.002 in.) dynamic.
(5) Tolerance for this dimension is ±1.52 mm (±0.06 in.).

Power Connectors on Kinetix RDB Servo Motors		RDB-B290*xx* Cat. No.	RDB-B410*xx* Cat. No.
M23 Power Connector		RDB-B29014, RDB-B29016, RDB-B29024, RDB-B29019, RDB-B29034, RDB-B29026	N/A
M40 Power Connector		RDB-B29036, RDB-B29029, RDB-B29039	RDB-B410*xx*

Motors are designed to metric dimensions. Inch dimensions are approximate conversions from millimeters. Dimensions without tolerances are for reference.

Kinetix HPK Asynchronous Servo Motors



Kinetix HPK servo motors employ proven induction motor technology optimized for servo system performance. These high horsepower motors offer exceptional performance for rapid acceleration and deceleration. These motor pair with the Kinetix 5700 single-axis inverters or Kinetix 7000 servo drives to extend the range of Kinetix Integrated Motion solutions up to 150 kW.

Kinetix HPK Servo Motor Features

Attribute	Value
Main characteristics	• High-power • Hiperface encoder protocol • Large load inertia
Features	• 400V and 460V windings • Single-turn and multi-turn absolute feedback • DIN connectors, rotates 180° • Blower cooled • IEC flange or foot mount
Motor type	Asynchronous servo motors
Environmental rating	IP54
Certifications	Kinetix HPK rotary motors are UL Recognized components to applicable UL and CSA standards. CE marked for all applicable directives. Refer to rok.auto/certifications for the Product Certifications website.
Continuous stall torque	96…955 N•m (849…8452 lb•in)
Peak stall torque	165…1927 N•m (1460…17,054 lb•in)
Rated speed	Rated speeds of 1500 and 3000 rpm
Motor rated output	17.1…150 kW
Compatible servo drives	• Kinetix 5700 • Kinetix 7000
Compatible servo cables	2090-C*xx*M7*xx* feedback cables
Typical applications	• High power packaging • Converting • Wind/unwind/rewind • Sheeters • Flying knife • Material handling

Catalog Numbers - Kinetix HPK Servo Motors

Catalog numbers consist of various characters, each of which identifies a specific option for that component. Use the catalog numbering table chart below to understand the configuration of your motor. For questions regarding product availability, contact your Allen-Bradley distributor.

HPK - x xxxx x - x x x x x x A

Factory Options
A = Standard

Mounting Type/Shaft Key
A = IEC metric, free mounting holes (type FF), foot mount and flange mount/Keyed shaft (1)
B = IEC metric, free mounting holes (type FF), foot mount only/Keyed shaft (2)

Brake
2 = No brake
4 = Holding brake 380...460V AC

Connections
4 = Feedback - right angle, 180° rotatable
Power - junction box

Blower/Junction Box Location
A = Inline blower, F3 junction box (no brake only)
B = Top-mounted blower, F1 junction box (brake only)
C = Top-mounted blower, F2 junction box (brake only)

Feedback
M = 1024 sin/cos, absolute multi-turn encoder (Hiperface protocol)
S = 1024 sin/cos, absolute single-turn encoder (Hiperface protocol)

Rated Speed (3)
C = 1500 rpm
E = 3000 rpm

Frame Size (3)

1307	1609	1815	2510
1308	1611	2010	
1310	1613	2212	

Voltage Class
B = 460V
E = 400V

Series
HPK = Kinetix HPK asynchronous servo motors

(1) Applies to only HPK-B/E13*xx* and HPK-B/E16*xx* motors.
(2) Applies to only HPK-B/E18*xx*, HPK-B/E20*xx*, HPK-B22*xx*, and HPK-B25*xx* motors.
(3) Not all combinations are available. Only the configurations for rated speed and frame size, as listed in Kinetix HPK Servo Motor (460V) Performance Specifications on page 167 and Kinetix HPK Servo Motor (400V) Performance Specifications on page 168, are available. Use Motion Analyzer software to size and select motors for your application.

Kinetix HPK Servo Motor Encoders

Kinetix HPK servo motors are available with high performance encoders with a choice of single-turn (-S) or multi-turn (-M) high-resolution feedback:

- 1024 sin/cos cycles per revolution for up to 21-bit resolution (2,097,152 counts per revolution) -M and -S (HPK-B*xxxx* and HPK-E*xxxx* motors).
- Single-turn encoder provides high-resolution absolute position feedback within one turn.
- Multi-turn encoder provides high-resolution absolute position feedback within 4096 turns. The electromechanical design does not require a battery.

Motor Connector/Cable Compatibility

Kinetix HPK servo motors are equipped with SpeedTec DIN connectors.

SpeedTec DIN Connector

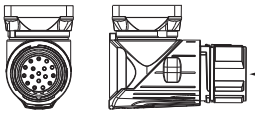

- HPK-B/E*xxxx* motors
- Receives M4 and M7 cable plugs (O-ring required for M4)
- Attach M7 cable plug with one-quarter turn

SpeedTec DIN (M7) Cable Plug

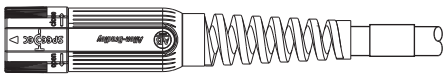

- 2090-CFBM7DF-CEAA*xx* (standard, non-flex) flying-lead, feedback cables
- 2090-CFBM7DD-CEAA*xx* (standard, non-flex) drive-end connector, feedback cables
- 2090-CFBM7DF-CEAF*xx* (continuous-flex) flying-lead, feedback cables
- 2090-CFBM7DD-CEAF*xx* (continuous-flex) drive-end connector, feedback cables
- 2090-CFBM7DF-CDAF*xx* (continuous-flex) flying-lead, feedback cables

Kinetix HPK Servo Motor Options

- Multiple junction box mounting locations (F1, F2, and F3).
- Holding brake, 380V...460V AC.
- 460V and 400V windings.
- Encoder kit (catalog number HPK-*xxxxxx*-ENC-*xx*) available for field replacement. Kits are pre-programmed for a specific motor catalog number. Kit includes cable and DIN connector.

HPK-*xxxxxx*-ENC-*xx*
Encoder Kit

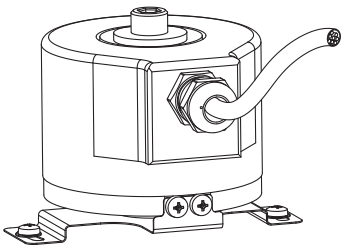

Technical Specifications - Kinetix HPK Servo Motors

Kinetix HPK Servo Motor (460V) Performance Specifications

Motor Cat. No.	Rated Speed rpm	Maximum Speed rpm	Continuous Stall Torque N•m (lb•in)	Peak Stall Torque N•m (lb•in)	Motor Rated Output kW (Hp)	Rotor Inertia (1) kg-m^2 (lb•in•s^2)	Motor Weight, approx kg (lb)
HPK-B1307C	1500	3000	112 (991)	257 (2274)	17.1 (22.9)	0.081 (0.7168)	135 (297)
HPK-B1308C			141 (1247)	262 (2319)	21.6 (28.9)	0.098 (0.8673)	152 (335)
HPK-B1310C			155 (1372)	325 (2876)	23.8 (31.9)	0.111 (0.9823)	166 (366)
HPK-B1613C			271 (2398)	542 (4797)	41.7 (55.9)	0.206 (1.8231)	275 (606)
HPK-B1815C			360 (3186)	850 (7523)	55.9 (74.9)	0.468 (4.1418)	474 (1045)
HPK-B2010C			482 (4266)	970 (8585)	75.0 (100.5)	0.885 (7.8322)	531 (1170)
HPK-B2212C			607 (5371)	1105 (9780)	94.0 (127)	1.900 (16.829)	847 (1867)
HPK-B2510C		2000	955 (8452)	1927 (17,054)	150 (200)	3.070 (27.192)	1005 (2216)
HPK-B1307E	3000	5000	96 (849)	165 (1460)	29.8 (39.9)	0.081 (0.7168)	135 (297)
HPK-B1308E			115 (1018)	230 (2035)	35.7 (47.8)	0.098 (0.8673)	152 (335)
HPK-B1609E			156 (1381)	270 (2390)	48.4 (64.8)	0.147 (1.3009)	231 (469)
HPK-B1611E			183 (1619)	400 (3540)	57.0 (76.4)	0.177 (1.5664)	244 (538)
HPK-B1613E			237 (2097)	459 (4062)	73.7 (98.8)	0.206 (1.8231)	275 (606)
HPK-B2010E			295 (2610)	500 (4425)	92.0 (125)	0.885 (7.8322)	531 (1170)

(1) Rotor inertia can vary slightly depending on feedback.

Kinetix HPK Servo Motor (400V) Performance Specifications

Motor Cat. No.	Rated Speed rpm	Maximum Speed rpm	Continuous Stall Torque N•m (lb•in)	Peak Stall Torque N•m (lb•in)	Motor Rated Output kW (Hp)	Rotor Inertia (1) kg-m^2 (lb•in•s^2)	Motor Weight, approx kg (lb)
HPK-E1307C	1500	3000	112 (991)	263 (2327)	17.1 (22.9)	0.081 (0.7168)	135 (297)
HPK-E1310C			155 (1372)	380 (3363)	23.8 (32.4)	0.111 (0.9823)	166 (366)
HPK-E1613C			271 (2398)	625 (5531)	41.7 (55.9)	0.206 (1.8231)	275 (606)
HPK-E1815C			360 (3186)	840 (7434)	55.9 (74.9)	0.468 (4.1418)	474 (1045)
HPK-E2010C			482 (4266)	870 (7700)	75.0 (100.5)	0.885 (7.8322)	531 (1170)
HPK-E1307E	3000	5000	96.0 (849)	202 (1788)	29.8 (39.9)	0.081 (0.7168)	135 (297)
HPK-E1308E			107 (947)	200 (1770)	33.2 (45.0)	0.098 (0.8673)	152 (335)
HPK-E1609E			156 (1381)	359 (3176)	48.4 (64.9)	0.147 (1.3009)	213 (469)
HPK-E1611E			183 (1619)	430 (3805)	57.0 (76.4)	0.177 (1.5664)	244 (538)
HPK-E1613E			237 (2097)	430 (3805)	73.7 (98.8)	0.206 (1.8231)	275 (606)

(1) Rotor inertia can vary slightly depending on feedback.

Kinetix HPK Servo Motor Brake Specifications

Motor Cat. No.	Holding Torque N•m (lb•in)
HPK-B/E1307C	20 (177)
HPK-B/E1308C	
HPK-B/E1310C	
HPK-B/E1613C	
HPK-B/E1815C	48 (425)
HPK-B/E2010C	
HPK-B2212C	102 (903)

Motor Cat. No.	Holding Torque N•m (lb•in)
HPK-B/E1307E	20 (177)
HPK-B/E1308E	
HPK-B/E1609E	
HPK-B/E1611E	
HPK-B/E1613E	
HPK-B/E2010E	48 (425)

Kinetix HPK Servo Motor Load Force Ratings

Kinetix HPK servo motors are capable of operating with the maximum radial or maximum axial shaft loads listed in the following tables. Radial loads listed are applied in the middle of the shaft extension. The tables starting below represent an L_{10} bearing fatigue life of 10,000 hours. This 10,000-hour life does not account for possible application-specific life reduction that can occur due to bearing grease contamination from external sources. Maximum operating speed is limited by motor winding.

Load Forces on Shaft

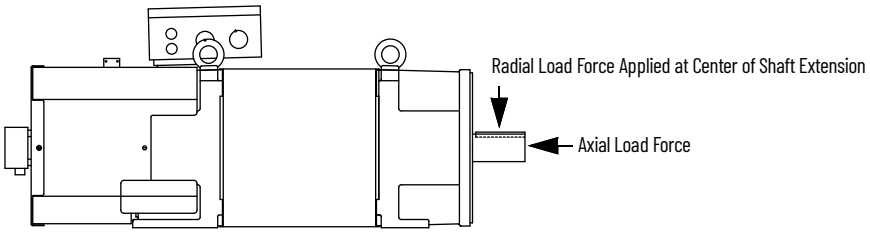

Radial Load Force Ratings (zero axial load)

Motor Cat. No.	850 rpm kg (lb)	1150 rpm kg (lb)	1750 rpm kg (lb)	2500 rpm kg (lb)
HPK-B/E1307	320 (704)	290 (638)	250 (550)	220 (485)
HPK-B/E1308	320 (704)	290 (638)	250 (550)	220 (485)
HPK-B/E1310	320 (704)	290 (638)	250 (550)	220 (485)
HPK-B/E1609	500 (1100)	450 (990)	390 (858)	350 (770)
HPK-B/E1611	500 (1100)	450 (990)	390 (858)	350 (770)
HPK-B/E1613	500 (1100)	450 (990)	390 (858)	350 (770)
HPK-B/E1815	530 (1166)	530 (1166)	530 (1166)	450 (990)
HPK-B/E2010	660 (1452)	660 (1452)	660 (1452)	580 (1276)
HPK-B2212	730 (1609)	690 (1521)	600 (1323)	530 (1168)
HPK-B2510				

Axial Load Force Ratings (zero radial load)

Motor Cat. No.	850 rpm kg (lb)	1150 rpm kg (lb)	1750 rpm kg (lb)	2500 rpm kg (lb)
HPK-B/E1307	260 (572)	240 (528)	210 (462)	180 (396)
HPK-B/E1308	260 (572)	240 (528)	210 (462)	180 (396)
HPK-B/E1310	260 (572)	240 (528)	210 (462)	180 (396)
HPK-B/E1609	360 (796)	330 (726)	290 (638)	250 (550)
HPK-B/E1611	360 (796)	330 (726)	290 (638)	250 (550)
HPK-B/E1613	360 (796)	330 (726)	290 (638)	250 (550)
HPK-B/E1815	440 (970)	380 (838)	310 (682)	260 (572)
HPK-B/E2010	530 (1166)	460 (1012)	370 (814)	310 (682)
HPK-B2212	800 (1764)	730 (1609)	630 (1389)	560 (1235)
HPK-B2510				

Dimensions - Kinetix HPK Servo Motors

HPK-B/E13*xx* and HPK-B/E16*xx* Motor (non-brake) Dimensions

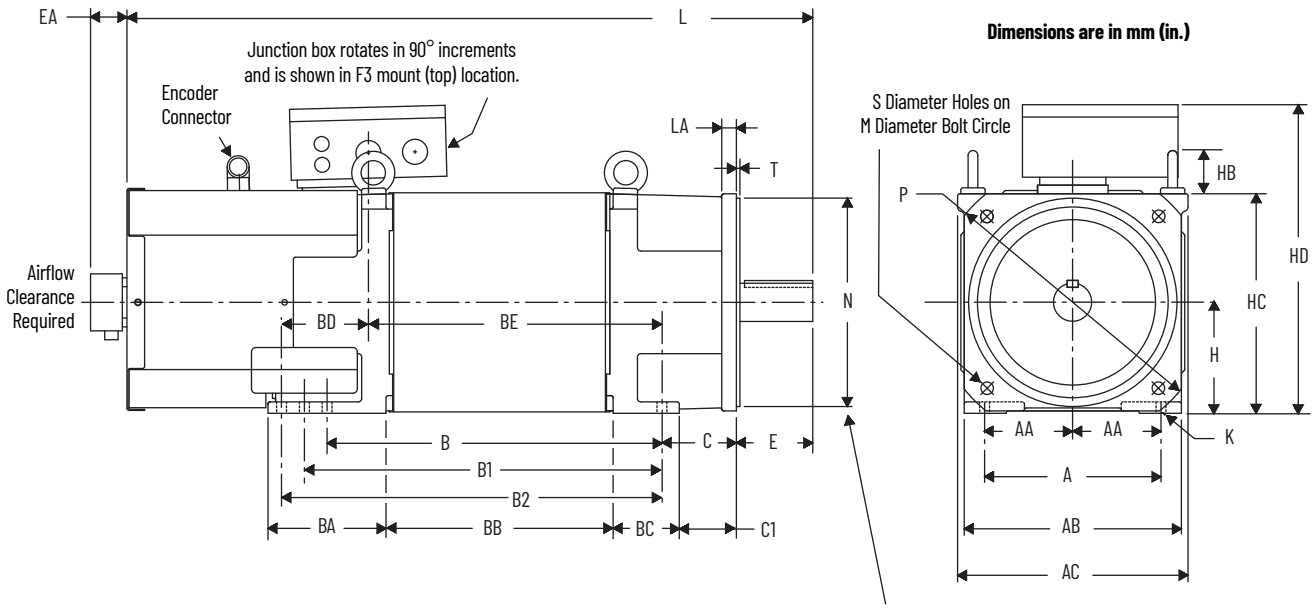

Shaft Diameter Tolerances
HPK-B/E1307, 1308, 1310
Ø 48.003…48.016 (1.8899…1.8904)
HPK-B/E1609, 1611, 1613
Ø 55.011…55.030 (2.1658…2.1665)

Pilot Diameter Tolerances
HPK-B/E1307, 1308, 1310
Ø 249.99…250.02 (9.842…9.844)
HPK-B/E1609, 1611, 1613
Ø 299.99…300.02 (11.809…11.811)

Shaft Detail with Key

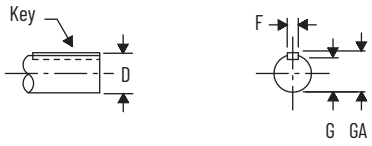

HPK-B/E1307, 1308, 1310 = 14 x 9 x 80 Key
HPK-B/E1609, 1611, 1613 = 16 x 10 x 90 Key

Shaft, Pilot, and Keyway Tolerances	HPK-B/E13*xx*	HPK-B/E16*xx*
Shaft Runout (T.I.R.)	0.06 (0.002)	0.06 (0.002)
Max Face Runout (T.I.R.)	0.13 (0.005)	0.13 (0.005)
Keyway Depth (GA)	51.30…51.9 (2.02…2.04)	58.67…58.92 (2.31…2.32)
Keyway Depth (G)	42.42…42.92 (1.67…1.69)	48.50…49.00 (1.91…1.93)
Keyway Width (F)	13.94…13.99 (0.549…0.551)	15.95…16.00 (0.628…0.630)

HPK-B/E13*xx* and HPK-B/E16*xx* Motor (non-brake) Dimensions

Motor Cat. No.	H mm (in.)	HC mm (in.)	HD mm (in.)	HB mm (in.)	L mm (in.)	EA mm (in.)	LA mm (in.)	T mm (in.)	P mm (in.)	M mm (in.)	S (1) mm (in.)	N (2) mm (in.)	D (2) mm (in.)	G (2) mm (in.)	GA (2) mm (in.)	F (2) mm (in.)
HPK-B/E1307	132 (5.20)	262 (10.3)	366 (14.4)	53.0 (2.09)	806 (31.7)	52.0 (2.05)	17.0 (0.67)	5.0 (0.20)	350 (13.7)	300 (11.8)	18.5 (0.73)	250 (9.84)	48.0 (1.89)	42.4 (1.67)	51.3 (2.02)	13.9 (0.55)
HPK-B/E1308					845 (33.2)											
HPK-B/E1310					876 (34.4)											
HPK-B/E1609	160 (6.30)	316 (12.4)	444 (17.4)	62.0 (2.44)	886 (34.8)	52.0 (2.05)	21.0 (0.83)	5.0 (0.20)	400 (15.7)	350 (13.7)	18.5 (0.73)	300 (11.8)	55.0 (2.16)	48.5 (1.91)	58.7 (2.31)	16.0 (0.63)
HPK-B/E1611			450 (17.7)		937 (36.8)											
HPK-B/E1613					987 (38.8)											

(1) Tolerance for this dimension is +0.52, -0.0 mm (+0.02, -0.0 in.).
(2) For keyway, shaft diameter, and pilot diameter tolerances, refer to page 170.

Motor Cat. No.	K mm (in.)	A mm (in.)	AA mm (in.)	AB mm (in.)	AC mm (in.)	B mm (in.)	B1 mm (in.)	B2 mm (in.)	BA mm (in.)	BB mm (in.)	BC mm (in.)	C mm (in.)	C1 mm (in.)	E mm (in.)	BD mm (in.)	BE mm (in.)
HPK-B/E1307	12.0 (0.47)	216 (8.50)	108 (4.25)	260 (10.2)	279 (10.9)	333 (13.1)	365 (14.3)	390 (15.3)	154 (6.06)	187 (7.36)	95.0 (3.74)	89.0 (3.50)	57.0 (2.24)	110 (4.33)	91.0 (3.58)	300 (11.8)
HPK-B/E1308						371 (14.6)	403 (15.8)	428 (16.8)		226 (8.90)						338 (13.3)
HPK-B/E1310						403 (15.8)	435 (17.1)	462 (18.1)		257 (10.1)						369 (14.5)
HPK-B/E1609	14.0 (0.55)	254 (10.0)	127 (5.0)	313 (12.3)	332 (13.0)	N/A	414 (16.3)	452 (17.8)	170 (6.69)	225 (8.86)	95.0 (3.74)	108 (4.25)	82.0 (3.23)	110 (4.33)	130 (5.12)	321 (12.6)
HPK-B/E1611						N/A	464 (18.2)	502 (19.7)		276 (10.8)						372 (14.6)
HPK-B/E1613						N/A	515 (20.2)	548 (21.5)		327 (12.8)					125 (4.92)	423 (16.6)

Motors are designed to metric dimensions. Inch dimensions are approximate conversions from millimeters. Dimensions without tolerances are for reference.

HPK-B/E13*xx* and HPK-B/E16*xx* Motor (brake) Dimensions

Dimensions are in mm (in.)

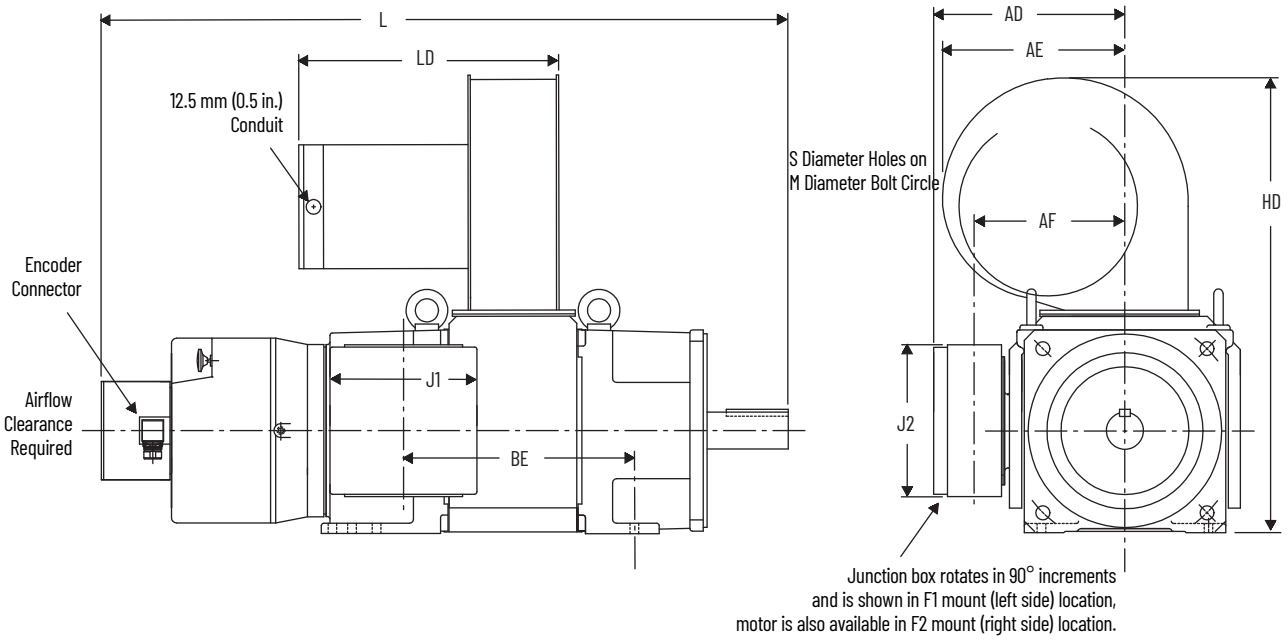

HPK-B/E13*xx* and HPK-B/E16*xx* Motor (brake) Dimensions

Motor Cat. No.	**L** mm (in.)	**LD** mm (in.)	**BE** mm (in.)	**AD** mm (in.)	**AE** mm (in.)	**AF** mm (in.)	**HD** mm (in.)	**J1** mm (in.)	**J2** mm (in.)
HPK-B/E1307	888 (34.9)	336 (13.2)	298 (11.7)	247 (9.72)	236 (9.29)	195 (7.68)	588 (23.1)	190 (7.48)	196 (7.72)
HPK-B/E1308	926 (36.4)		336 (13.2)						
HPK-B/E1310	957 (37.7)		368 (14.5)						
HPK-B/E1609	967 (38.0)	332 (13.0)	328 (12.9)	285 (11.2)	236 (9.29)	225 (8.86)	670 (26.3)	224 (8.82)	228 (8.98)
HPK-B/E1611	1018 (40.1)		379 (14.9)						
HPK-B/E1613	1069 (42.1)		430 (16.9)						

Motors are designed to metric dimensions. Inch dimensions are approximate conversions from millimeters. Dimensions without tolerances are for reference.

HPK-B/E1815 Motor (non-brake) Dimensions

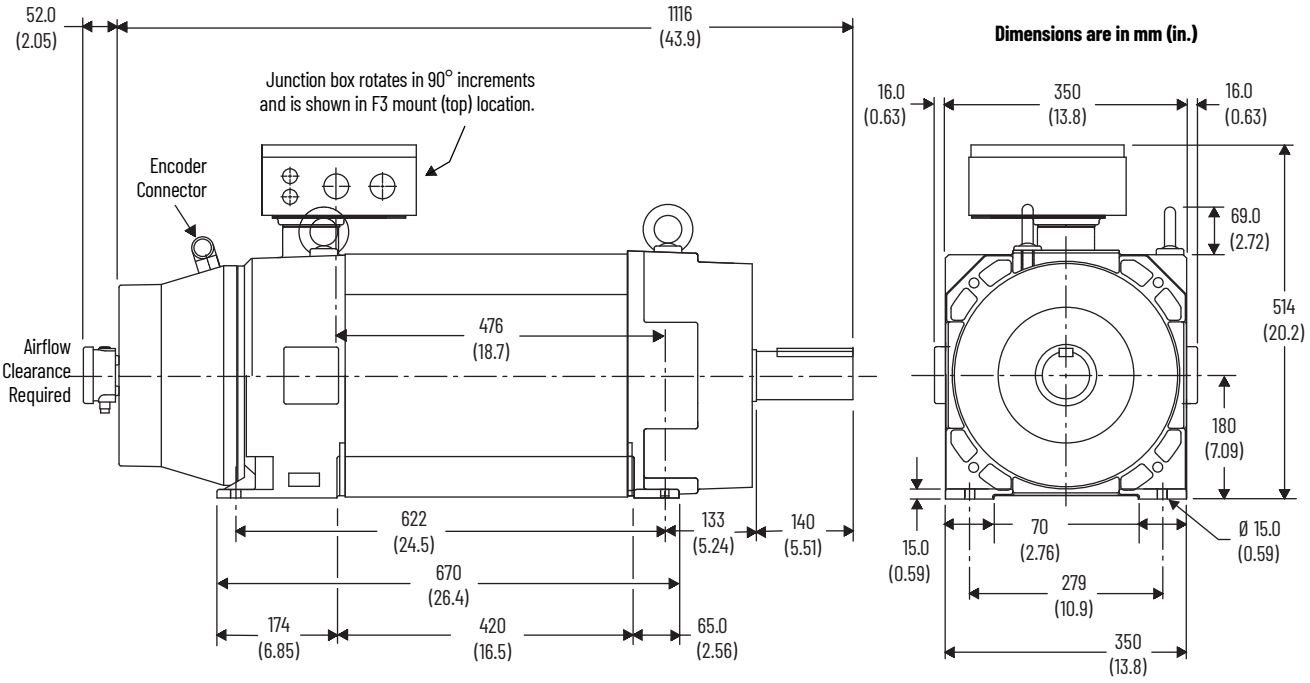

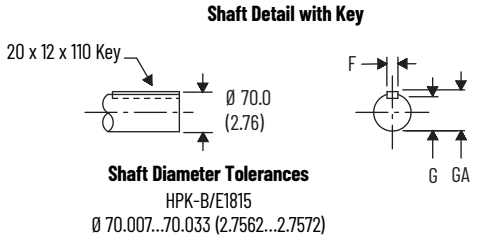

Shaft, Pilot, and Keyway Tolerances	HPK-B/E1815
Shaft Runout (T.I.R.)	0.06 (0.002)
Max Face Runout (T.I.R.)	0.13 (0.005)
Keyway Depth (GA)	73.90...74.50 (2.91...2.93)
Keyway Depth (G)	62.00...62.50 (2.44...2.46)
Keyway Width (F)	19.94...19.99 (0.785...0.787)

HPK-B/E1815 Motor (brake) Dimensions

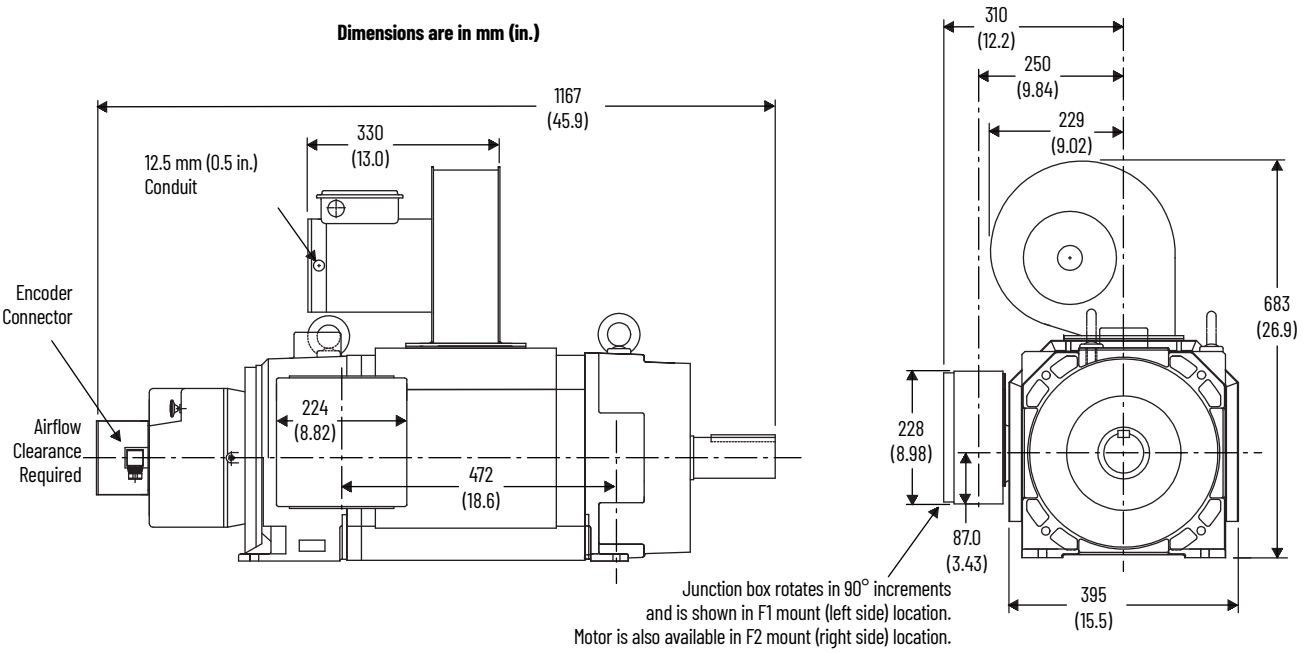

HPK-B/E2010 Motor (non-brake) Dimensions

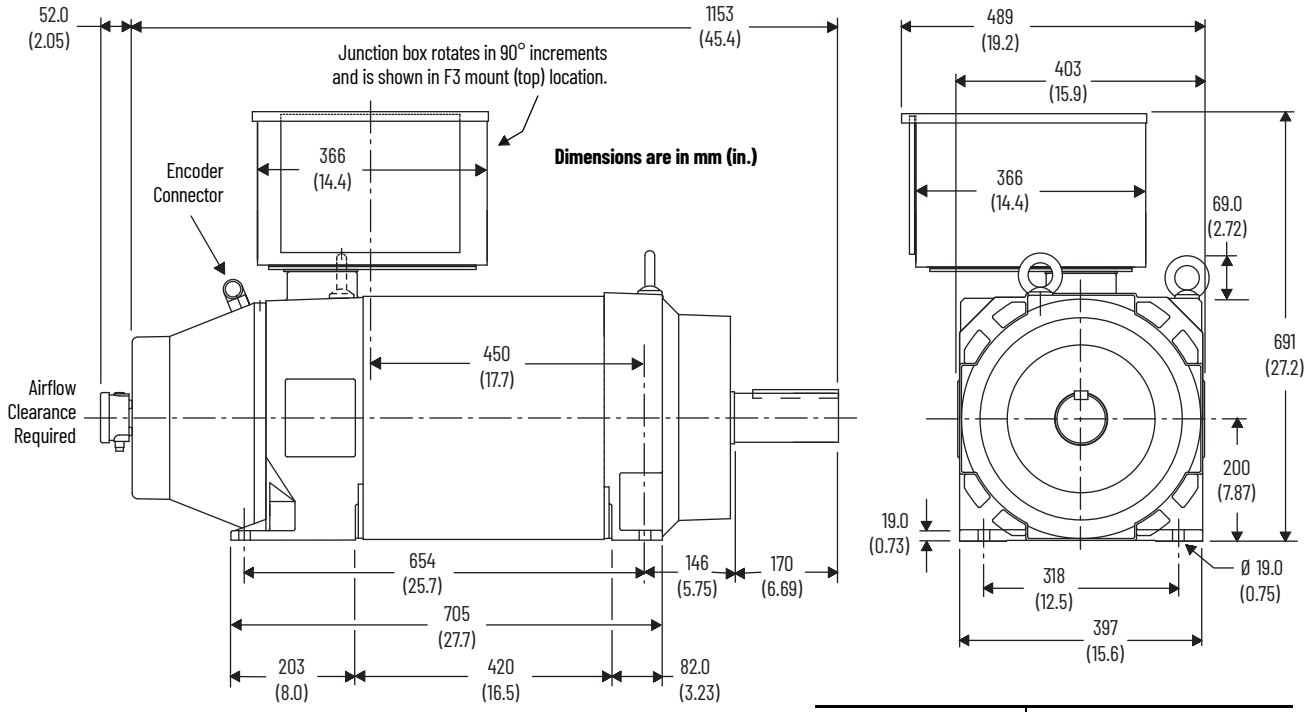

Shaft Detail with Key

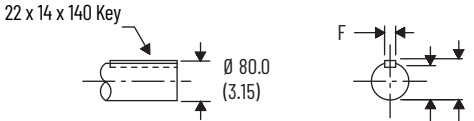

Shaft Diameter Tolerances

HPK-B/E2010
Ø 80.010…80.028 (3.1500…3.1507)

Shaft, Pilot, and Keyway Tolerances	HPK-B/E2010
Shaft Runout (T.I.R.)	0.06 (0.002)
Max Face Runout (T.I.R.)	0.13 (0.005)
Keyway Depth (GA)	84.50…85.10 (3.33…3.35)
Keyway Depth (G)	70.60…71.10 (2.78…2.80)
Keyway Width (F)	21.95…22.00 (0.864…0.866)

HPK-B/E2010 Motor (brake) Dimensions

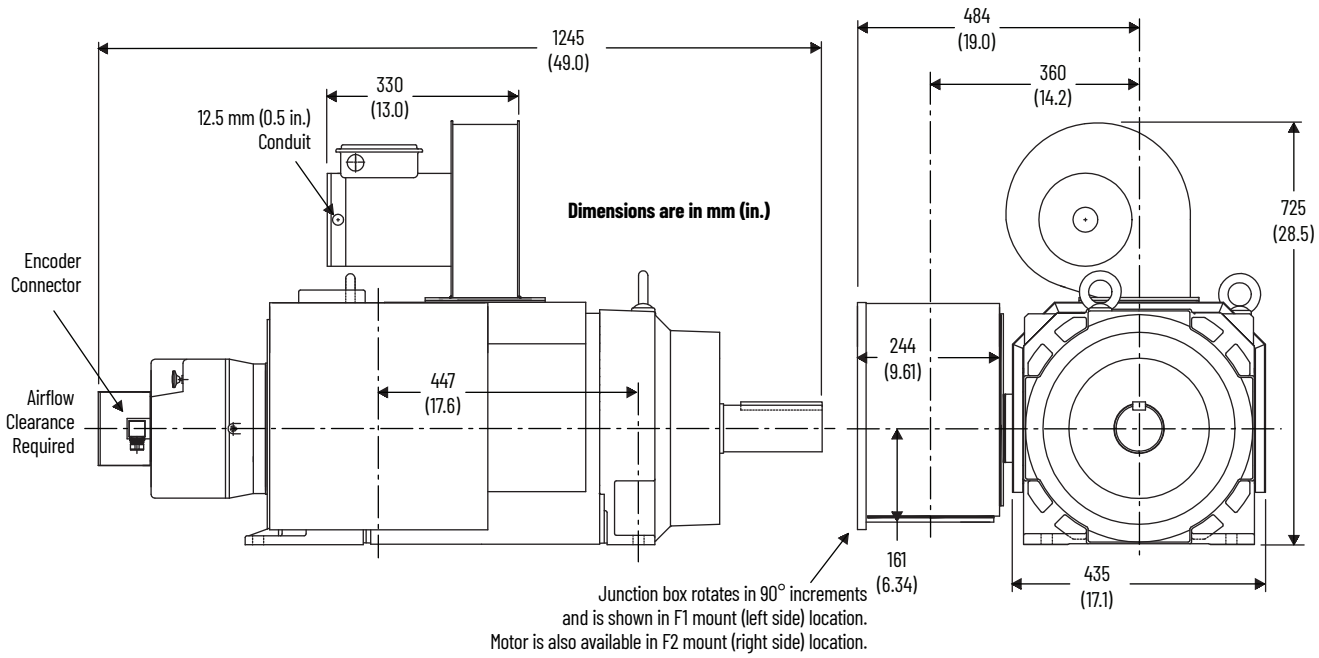

HPK-B2212 Motor (non-brake) Dimensions

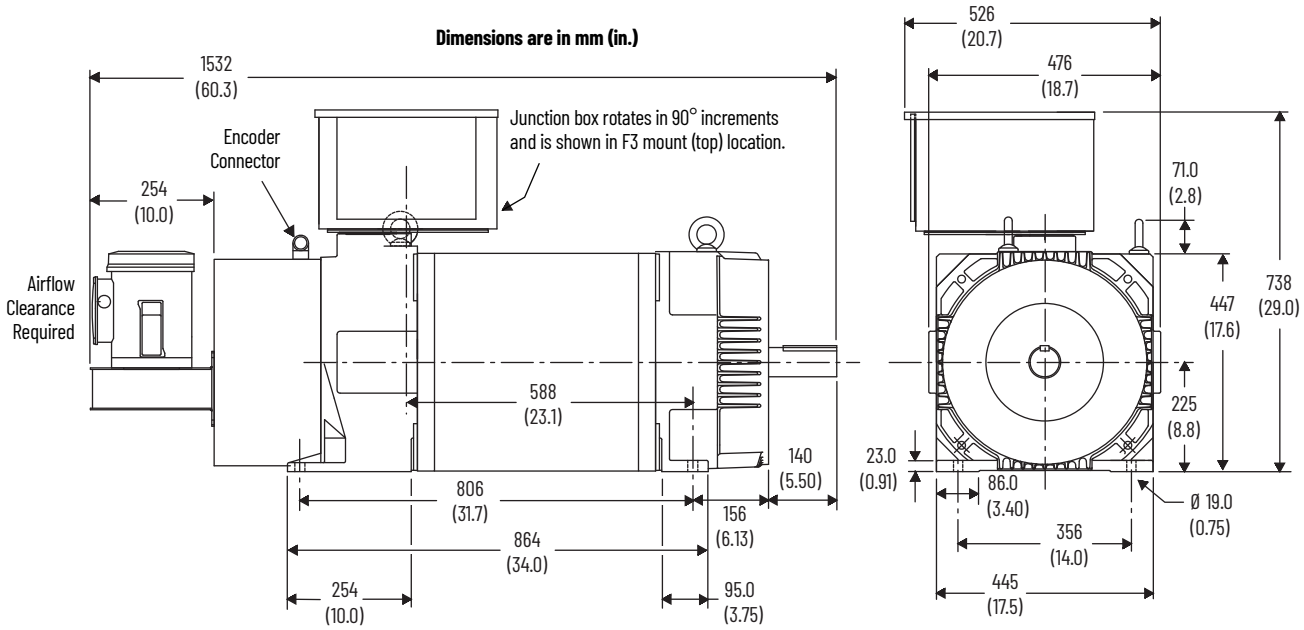

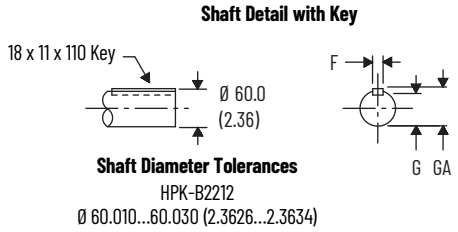

Shaft, Pilot, and Keyway Tolerances	HPK-B2212
Shaft Runout (T.I.R.)	0.06 (0.002)
Max Face Runout (T.I.R.)	0.13 (0.005)
Keyway Depth (GA)	63.08...64.08 (2.48...2.59)
Keyway Depth (G)	52.57...53.08 (2.07...2.09)
Keyway Width (F)	21.95...22.00 (0.864...0.866)

HPK-B2212 Motor (brake) Dimensions

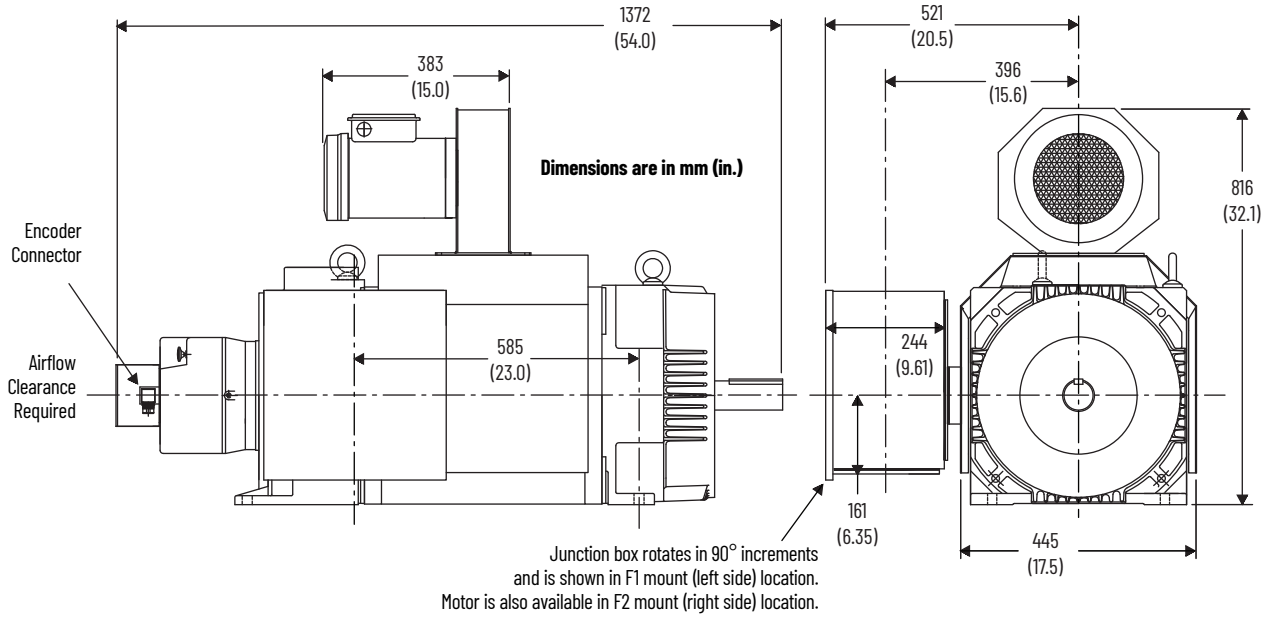

Motors are designed to metric dimensions. Inch dimensions are approximate conversions from millimeters. Dimensions without tolerances are for reference.

HPK-B2510 Motor (non-brake) Dimensions

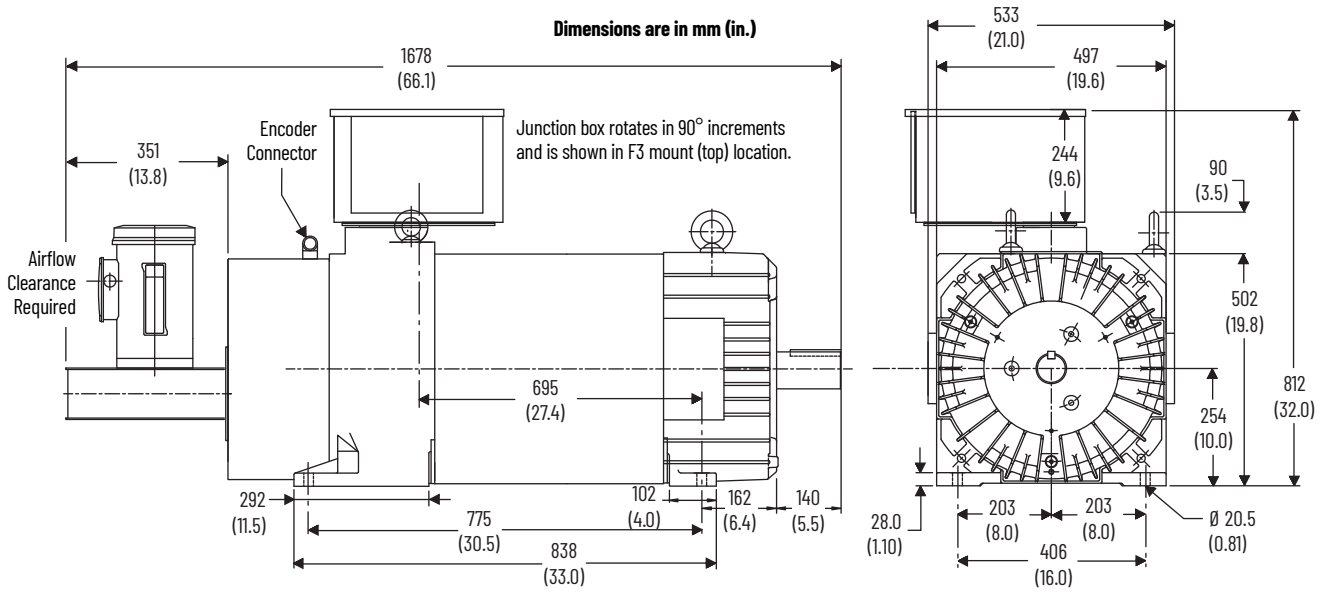

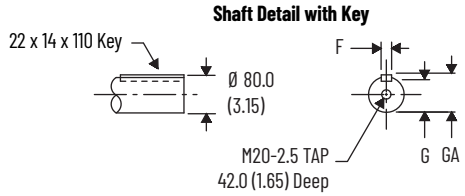

Shaft Diameter Tolerances
HPK-B2510
Ø 80.028...80.010 (3.1507...3.1500)

Shaft, Pilot, and Keyway Tolerances	HPK-B2510
Shaft Runout (T.I.R.)	0.06 (0.002)
Max Face Runout (T.I.R.)	0.13 (0.005)
Keyway Depth (GA)	85.1...84.5 (3.35...3.33)
Keyway Depth (G)	71.1...70.6 (2.80...2.78)
Keyway Width (F)	22.0...21.95 (0.866...0.864)

Motors are designed to metric dimensions. Inch dimensions are approximate conversions from millimeters. Dimensions without tolerances are for reference.

Kinetix MMA Asynchronous Main Motors



Kinetix MMA asynchronous main motors are three-phase AC induction motors optimized to Kinetix 5700 drives, and are also compatible with Kinetix 7000 drives as well as PowerFlex® 750-series drives. Offered in six different shaft heights, with multiple speed ranges, these motors cover a wide range of heavy-duty applications that require the highest power and torque output. Many configurable features and special options, which can be so critical for ultimate application and customer success, make this motor successful across many different industries and applications.

Kinetix MMA Main Motor Features

Attribute	Value
Main characteristics	• High power and torque output • Low and high-speed windings • Hiperface, EnDat, SIL2, and incremental encoders • Ball, roller, and high-speed bearings • Medium-inertia rotor • Configurable features and options
Features	• 400V class windings • Axial or Radial Blowers • IEC flange and foot mount • Shaft with increased/decrease diameter options • Integrated thermal sensors • Protection options for harsh, humid conditions
Motor type	Asynchronous main motors
Environmental rating	IP54 (standard) IP55 (option)
Certifications	Kinetix MMA main motors carry many global certifications and meet all applicable directives. Refer to rok.auto/certifications for the Product Certifications website.
Continuous stall torque	8.6…1239 N•m (76.1…10,966 lb•in)
Peak stall torque	25…2600 N•m (221.3…23,012 lb•in)
Rated speed	Rated speeds of 580, 1000, 1500, 1800, 2200, and 2600 rpm
Motor rated output	0.6…205 kW
Compatible drives	• Kinetix 5700 • Kinetix 7000 • PowerFlex 755 • PowerFlex 755T
Compatible cables	• 2090-CFBM7DF-CDAFxx (feedback cables for connection to Kinetix Drives) • 2090-CFBM7DF-CFAFxx (feedback cables for connection to PowerFlex Drives)
Typical applications	• Converting • Wind/unwind/rewind • Sheeters • Flying knife • Material handling • Tire building • Metal forming

Motor Catalog Number Explanation

MMx-x xxx x xx - xx x x xx x x x

a b c d e f g h i j k l m n o p

MMx-x xxx x x - xx x x **xx x x x x x x x** (see Catalog Number Explanation (cont.))

(h) **Terminal Box**
A = Top side, right holes
B = Top side, right and left holes
C = Top side, front holes
D = Right side, bottom holes (1)
E = Right side, front holes (1)
F = Right side, rear holes (1)
G = Left side, bottom holes (1)
H = Left side, front holes (1)
J = Left side, rear holes (1)
K = Top side, right holes, reduction ring M32x1.5mm (1)
L = Top side, right holes, reduction ring M40x1.5mm (1)
M = Top side, right holes, reduction ring M50x1.5mm (2)
N = Top side, right and left holes, reduction ring M32x1.5mm (1)
P = Top side, right and left holes, reduction ring M40x1.5mm (1)
Q = Top side, right and left holes, reduction ring M50x1.5mm (2)

(g) Shaft Type ***(Verify the motor torque before selecting the reduced shaft diameter option.)*** (3)
A = Standard shaft keyed, A balancing degree (half key balancing)
B = Standard shaft keyed, B balancing degree (half key balancing)
C = Standard shaft keyed, A balancing degree (full key balancing)
D = Standard shaft keyed, B balancing degree (full key balancing)
E = Standard shaft smooth, A balancing degree
F = Standard shaft smooth, B balancing degree
G = Increased shaft diameter keyed, A balancing degree (half key balancing)
H = Increased shaft diameter keyed, B balancing degree (half key balancing)
J = Increased shaft diameter keyed, A balancing degree (full key balancing)
K = Increased shaft diameter keyed, B balancing degree (full key balancing)
L = Increased shaft diameter smooth, A balancing degree
M = Increased shaft diameter smooth, B balancing degree
N = Reduced shaft diameter keyed, A balancing degree (half key balancing)
P = Reduced shaft diameter keyed, B balancing degree (half key balancing)
Q = Reduced shaft diameter keyed, A balancing degree (full key balancing)
R = Reduced shaft diameter keyed, B balancing degree (full key balancing)
S = Reduced shaft diameter smooth, A balancing degree
T = Reduced shaft diameter smooth, B balancing degree

(f) Feedback Type
L2 = 2048 ppr, TTL incremental encoder
S1 = 1024 sin/cos, absolute single-turn encoder (Hiperface protocol)
S2 = 1024 sin/cos, absolute single-turn encoder, SIL 2/PLd rated (Hiperface protocol)
S3 = 2048 sin/cos, absolute single-turn encoder (EnDat protocol)
S4 = 25-bit absolute single-turn encoder (EnDat protocol)
M1 = 1024 sin/cos, absolute multi-turn encoder (Hiperface protocol)
M2 = 1024 sin/cos, absolute multi-turn encoder SIL 2/PLd rated (Hiperface protocol)
M3 = 2048 sin/cos absolute multi-turn encoder (EnDat protocol)
M4 = 25-bit absolute multi-turn encoder (EnDat protocol)

(e) Rated Speed (@ Rated V AC)
06 = 580 rpm
10 = 1000 rpm
15 = 1500 rpm
18 = 1800 rpm
22 = 2200 rpm
26 = 2600 rpm

(d) Stator Length
A, B, C, D, or E

(c) Shaft Height
080 = Shaft height 80 mm
100 = Shaft height 100 mm
132 = Shaft height 132 mm
160 = Shaft height 160 mm
180 = Shaft height 180 mm
225 = Shaft height 225 mm

(b) Voltage Class
B = 400V AC

(a) Motor Type
MMA = Asynchronous Main Motor

Lower-case letters that are shown under the catalog number indicate the catalog number position.

See the Knowledgebase article: Kinetix MMA Frequently Asked Questions, for additional information.

Use the Proposal Works online configuration tool for full catalog options and dependencies.

Note	Description
1	Not available for shaft height 80 and 100
2	Only for shaft height 180 and 225
3	See Shaft Dimensions on page 180 for compatibility

Catalog Number Explanation (cont.)

MMx-x xxx x xx - xx x x **XX X X X X X X X**
a b c d e f g h i j k l m n o p

(i) Brakes ***(Maximum motor speed (rpm) is limited by the brake selection.)***
22 = No brake (standard)
C4 = Holding brake,16 N•m, 24V DC, 4000 rpm (1)
C5 = Holding brake,16 N•m, 24V DC, 4000 rpm, on/off switch (1)
C6 = Holding brake,16 N•m, 24V DC, 4000 rpm, hand-release (1)
C7 = Holding brake,16 N•m, 24V DC, 4000 rpm, hand-release, on/off switch (1)
D4 = Holding brake, 80 N•m, 24V DC, 3600 rpm (2)
D5 = Holding brake, 80 N•m, 24V DC, 3600 rpm, on/off switch (2)
D6 = Holding brake, 80 N•m, 24V DC, 3600 rpm, hand-release (2)
D7 = Holding brake, 80 N•m, 24V DC, 3600 rpm, hand-release, on/off switch (2)
E4 = Holding brake, 200 N•m, 24V DC, 3600 rpm (3)
E5 = Holding brake, 200 N•m, 24V DC, 3600 rpm, on/off switch (3)
E6 = Holding brake, 150 N•m, 24V DC, 3600 rpm, hand-release (3)
E7 = Holding brake, 150 N•m, 24V DC, 3600 rpm, hand-release, on/off switch (3)
F4 = Holding brake, 400 N•m, 24V DC, 3600 rpm (4)
F5 = Holding brake, 400 N•m, 24V DC, 3600 rpm, on/off switch (4)
F6 = Holding brake, 260 N•m, 24V DC, 3600 rpm, hand-release (5)
F7 = Holding brake, 260 N•m, 24V DC, 3600 rpm, hand-release, on/off switch (5)
G4 = Holding brake, 600 N•m, 24V DC, 3000 rpm (6)
G5 = Holding brake, 600 N•m, 24V DC, 3000 rpm, on/off switch (6)
G6 = Holding brake, 400 N•m, 24V DC, 3000 rpm, hand-release (7)
G7 = Holding brake, 400 N•m, 24V DC, 3000 rpm, hand-release, on/off switch (7)
H4 = Holding brake, 1440 N•m, 400V AC, 2300 rpm max(8)
H5 = Holding brake, 1440 N•m, 400V AC, 2300 rpm max, on/off switch(8)
J4 = Holding brake, 2400 N•m, 400V AC, 2300 rpm max (8)
J5 = Holding brake, 2400 N•m, 400V AC, 2300 rpm max, on/off switch (8)

(j) Blower
A = Axial blower 1-PH
B = Axial blower 3-PH (8)
C = Radial blower 3-PH
D = IC17 clean-air option (motor prepared without blower) (9)(10)

(k) Bearings
A = Standard deep groove ball bearing, DE and NDE
B = Deep groove ball bearings, regreasable, DE; Deep groove ball bearing, NDE (9)
C = Deep groove ball bearings, DE; Deep groove ball bearing, brush, NDE (9)
D = Deep groove ball bearings, regreasable, DE; Deep groove ball bearing, brush, NDE (9)
E = Deep groove ball bearings, DE; Ball bearing, insulated, NDE (11)
F = Deep groove ball bearings, regreasable, DE; Ball bearing, insulated NDE (9)
J = Roller bearing, regreasable, DE; Standard ball bearing, NDE
K = Roller bearing, regreasable, DE; Standard ball bearing, brush NDE (9)
L = Roller bearing, regreasable, DE; Ball bearing, insulated, NDE (11)
M = High speed bearing, DE and NDE (11)
N = High speed bearing, regreasable, DE and NDE (11)
P = High speed bearing, DE; High speed bearing, brush, NDE (11)
Q = High speed bearing, regreasable, DE; High speed bearing, brush, regreasable, NDE (11)
R = High speed bearing, DE; High speed bearing, hybrid ceramic insulated, NDE (9)
S = High speed bearing, regreasable, DE; High speed bearing, hybrid ceramic insulated, NDE (9)

(l) Flange ***(Vertical mounting is not available with roller bearing option.)***
A = Standard flange
B = Standard flange, extra precise machining (12)
C = Standard flange, extra precise machining, vertical mounting (shaft facing up) (12)
D = Standard flange, vertical mounting (shaft facing up)
E = Increased dimension flange (13)
F = Increased dimension flange, extra precise machining (13)
G = Increased dimension flange, extra precise machining, vertical mounting (shaft facing up) (13)
H = Reduced dimension flange (4)
J = Reduced dimension flange, extra precise machining (4)
K = Reduced dimension flange, extra precise machining, vertical mounting (shaft facing up) (4)

(m) Certifications
A = Standard insulation system
C = cURus (UL/CSA) rated motor

(n) Protection
A = IP54 (standard)
B = IP 54, tropical windings
C = IP 55
D = IP 55, tropical windings
E = IP 55, stainless steel screws
F = IP 55, stainless steel screws, C3 anti-corrosion system
G =IP 55, stainless steel screws, C5i anti-corrosion system
H =IP 55, stainless steel screws, tropical windings
J = IP 55, stainless steel screws, C3 anti-corrosion system, tropical windings
K =IP 55, stainless steel screws, C5i anti-corrosion system, tropical windings

(o) Thermal Sensors
A = 1xTS, 1xPT1000 (standard)
B = 1xTS, 1xPT1000, 1xKTY84-130
C = 1xTS, 1xPT1000, 2xPT100 (bearing temperature) (9)
D = 1xTS, 1xPT1000, 1xKTY84-130, 2xPT100 (bearing temperature) (9)
E = 1xTS, 1xPT1000, space heater 110V AC
F = 1xTS, 1xPT1000, 1xKTY84-130, space heater 110V AC
G = 1xTS, 1xPT1000, 2xPT100 (bearing temperature), space heater 110V AC (9)
H = 1xTS, 1xPT1000, 1xKTY84-130, 2xPT100 (bearing temperature), space heater 110V AC (9)
J = 1xTS, 1xPT1000, space heater 220V AC
K = 1xTS, 1xPT1000, 1xKTY84-130, space heater 220V AC
L = 1xTS, 1xPT1000, 2xPT100 (bearing temperature), space heater 220V AC (9)
M = 1xTS, 1xPT1000, 1xKTY84-130, 2xPT100 (bearing temperature), space heater 220V AC (9)

(p) Special Options
A = No special options (standard)
B = Reinforced insulation system (9)
C = Vibrations certificate (11)
D = Aegis ring for shaft grounding
E = Reinforced insulation system, vibrations certificate (9)
F = Reinforced insulation system, vibrations certificate, Aegis ring for shaft grounding (9)

Lower-case letters that are shown under the catalog number indicate the catalog number position.

See the Knowledgebase article: Kinetix MMA Frequently Asked Questions, for additional information.

Use the Proposal Works online configuration tool for full catalog options and dependencies.

Note	Description
1	Only for shaft height 80
4	Only for shaft heights 132 and 160
7	Only for shaft height 180 and 225
10	IC17 clean-air option cannot come cURus certified
13	Only available for shaft height 80 and 100

Note	Description
2	Only for shaft height 100
5	Only for shaft heights 160
8	Only for shaft height 225
11	Not available for shaft height 80

Note	Description
3	Only for shaft height 132
6	Only for shaft heights 160, 180, and 225
9	Not available for shaft height 80 and 100
12	Not available for shaft height 225

Encoder Options

Kinetix MMA main motors are available with nine different encoder options, offering a broad range of performance and functionality to optimally meet application requirements and specifications (catalog code for each encoder option is shown in parentheses).

- Incremental encoder with 2048 ppr (-L2)
- Absolute single-turn or multi-turn, high-resolution encoders with:
  - 1024 sin/cos cycles per revolution, using Hiperface protocol, for up to 21-bit resolution or 2,097,152 counts per revolution. (-S1,-M1)
  - 1024 sin/cos cycles per revolution, with SIL2/PLd rating, using Hiperface protocol, for up to 21-bit resolution or 2,097,152 counts per revolution. (-S2,-M2)
  - 2048 sin/cos cycles per revolution, using EnDat 2.1 protocol, for up to 25-bit resolution or 33,554,432 counts per revolution, 4096 turns. (-S3,-M3)
  - 25-bit digital resolution, using EnDat 2.2 digital protocol, for up to 33,554,432 counts per revolution, 4096 turns. (-S4/-M4)

Shaft Options

Shaft Dimensions

Kinetix MMA main motors all come with a standard diameter shaft, however, an increased or decreased diameter option is available depending on frame size. See Dimensions - Kinetix MMA Asynchronous Main Motors on page 194...205. In addition to diameter, here you can also determine the balancing degree of the shaft, per IEC 60034-14. All Kinetix MMA main motors come with 'A' balancing degree as standard, but 'B' balancing degree can be specified for improved performance. (The 'B' balancing degree has reduced vibration for smoothest operation.) This balancing degree can be performed with half- or full-key balancing techniques, depending on what best fits your application. (See Motor Catalog Number Explanation on page 178 for selections).

Shaft Dimensions

Motor Cat. No.	Stator Cat. No.	Standard Shafts (Cat. No. A,B,C,D,E,F)		Increased Shafts (Cat. No. G,H,J,K,L,M)		Reduced Shafts (Cat. No. N,P,Q,R,S,T)	
		Diameter [D] mm (in.)	Length [E] mm (in.)	Diameter [D] mm (in.)	Length [E] mm (in.)	Diameter [D] mm (in.)	Length [E] mm (in.)
MMA-B080*xxx*	A, B	24 (0.94)	50 (1.97)	–	–	–	
	C	28 (1.10)	60 (2.36)			24 (0.94)	50 (1.97)
	D, E	24 (0.94)	50 (1.97)			–	
MMA-B100*xxx*	A	38 (1.50)	80 (3.15)			28 (1.10)	60 (2.36)
	B, C, D, E	38 (1.50)	80 (3.15)			–	
MMA-B132*xxx*	A, B, C	42 (1.65)	110 (4.33)	48 (1.89)	110 (4.33)	38 (1.50)	80 (3.15)
	D, E	48 (1.89)	110 (4.33)	–		42 (1.65)	110 (4.33)
MMA-B160*xxx*	A, B	55 (2.17)	110 (4.33)	60 (2.36)	140 (5.51)	48 (1.89)	110 (4.33)
	C, D	55 (2.17)	110 (4.33)	60 (2.36)	140 (5.51)	–	–
MMA-B180*xxx*	A	60 (2.36)	140 (5.51)	–			
	B, C, D	65 (2.56)	140 (5.51)	–			
MMA-B225*xxx*	A, B, C	75 (2.95)	140 (5.51)	85 (3.35)	170 (6.69)		
	D, E	85 (3.35)	170 (6.69)	–			

Shaft Key

Kinetix MMA main motors can be selected with a smooth or keyed shaft option. Shaft keys are dimensioned for an interference fit, slightly larger than the opening. An interference fit provides a secure and rigid mating connection. See Kinetix MMA Asynchronous Main Motors Installation Instructions, publication MM-IN001, for dimensions.

ATTENTION: Do not strike the shaft, key, couplings, or pulleys with tools during installation or removal.
Damage may occur to the motor bearings and the feedback device if sharp impact to the shaft is applied during installation of couplings and pulleys, or a shaft key.
Failure to observe these safety procedures could result in damage to the motor and its components.

Shaft Seals

Your Kinetix MMA motor requires a shaft seal, and comes as standard equipment. See Kinetix MMA Asynchronous Main Motors Installation Instructions, publication MM-IN001, for details.

Terminal Box Options

Kinetix MMA main motors come equipped with a terminal box that provides the terminal board for motor power and other options that require wiring. The standard configuration is top-mounted, with cable holes coming out of the right side. (see the following diagram). Depending on motor frame size and configuration, this terminal box can also come as right-mounted or left-mounted orientation, with cable holes pre-drilled into front/rear, or bottom directions. (A few special reduced-size holes are also available. See Motor Catalog Number Explanation on page 178 for more details.)

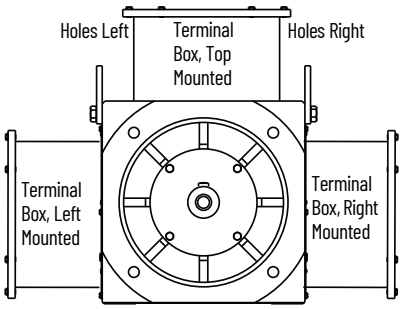

- For top mounting, cable holes can be front, rear, left, or right (dependencies exist).
- For side mounting, cable holes can be front, rear, or bottom (dependencies exist).

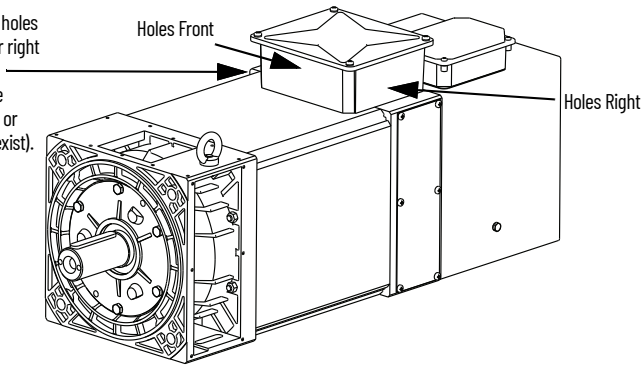

Brake Options

Kinetix MMA main motors can be configured with an optional electromagnetic holding brake. Most brakes can also be configured with a hand-release or a status switch (microswitch) for additional functionality. See the Motor Catalog Number Explanation for more information.

The brakes are spring actuated, and are suitable for use as parking/holding brake. This type of brake can be used to hold the load regardless if power is applied to the motor. The brake holding torques are designed to meet or exceed the continuous stall torque of the motor, however, some motors can develop a torque value that may exceed the holding torque capability. See Kinetix MMA Main Motor Brake Specifications on page 192 for brake holding torques.

All electromagnetic holding brakes have two additional options, they can be equipped with brake hand-releases and status switches.

When the brake is installed, it limits the maximum speed of the motor and, in some cases, vertical installation is not allowed. Consult the motor technical specification tables beginning on page 187 and brake technical specifications tables on page 192 for the maximum allowed speed or contact Rockwell Automation Support for more details.

The hand-release is a non-standard option that can be used on all motor shaft heights, except shaft height 225 with the 400V AC control. This manually operated brake hand-release is used to assist an operator to disengage an electromagnetically charged holding brake.

See Kinetix MMA Asynchronous Main Motors Installation Instructions, publication MM-IN001, for additional information.

Blower Options

For MMA-B080*xxx* through MMA-B160*xxx* size motors, a 1-phase axial blower is standard. For MMA-B132*xxx* and larger size motors, a 3-phase radial blower option is available. Additionally, for MMA-B160*xxx* and larger size motors, a 3-phase axial blower option is available. For MMA-B132*xxx* and larger size motors, you can order a radial blower option. As a standard configuration, the blower is mounted on the non-drive end (NDE) top side of the motor. You can remount the radial blower on either the right or left side as needed.

The Kinetix MMA main motors contain a separately powered blower. There are two blower types, axial and radial, with various input voltages.

Motor Blower Options (1)

Motor Cat. No.	Axial 1-PH (Blower Cat. No. A)	Axial 3-PH (Blower Cat. No. B)	Radial 3-PH (Blower Cat. No. C)
MMA-B080*xxx*	220…230V AC; 50/60 Hz	–	–
MMA-B100*xxx*	200…240V AC; 50/60 Hz	–	–
MMA-B132*xxx*		–	380…420V AC; 50/60 Hz
MMA-B160*xxx*	200…277V AC; 50/60 Hz	380…480V AC; 50/60 HZ	
MMA-B180*xxx*	–		
MMA-B225*xxx*	–		

(1) Without a blower, the IC17 clean-air option does not carry a cURus certification from the factory.

A motor can also be ordered without a blower, and is prepared with an adapter shroud that receives clean-air from an external source. This option is called IC17. See the Motor Catalog Number Explanation for more information.

Bearing Options

There are multiple bearing options available for selection with your Kinetix MMA main motor:

- Deep groove ball bearing
- Roller bearing
- High-speed bearing

Select one of these bearings based on your application requirements, including the DE or NDE location on the motor. Deep groove ball bearings are standard, and provide the broadest axial, radial, and speed coverage. Roller bearings provide the best performance for radial (side) shaft loading. An example is a belt and pulley transmission that is attached to the shaft. High-speed bearings are preferred if your application spends most of its duty-cycle above the motor rated speed.

There are additional features for some of the three types of bearings.

- Regreasable bearings exist with a fitting that allows periodic maintenance by adding additional grease. (See Kinetix MMA Asynchronous Main Motors Installation Instructions, publication MM-IN001, for types of grease used.)
- A brush can be specified if your application is considered to generate shaft currents that discharge through the motor shaft, causing potential damage. These brushes are installed on the NDE side.

IMPORTANT If damaging shaft currents are a concern, an Aegis Ring can also be chosen in the Special Options section of the motor catalog. This shaft grounding device has the same function as the brush, but can offer better results in two ways. First, the Aegis ring can offer better protection if the shaft currents are considered high-frequency. Second, the Aegis Ring has a longer life than the brush, similar to that of the bearings themselves. The Aegis ring lasts longer, and for more lifetime rpm, than the brush.

- An insulated bearing is one with an external or internal ring that is electrically insulated with aluminum oxide. A hybrid ceramic bearing is one with a ceramic ball, which is better than the insulated bearing because it can be used at high speed.

The combinations of these features have some dependencies that are based on motor frame size and configuration. See Motor Catalog Number Explanation on page 178.

Flange Options

All Kinetix MMA main motors come with standard flange sizes for mounting. However, an increased or decreased flange size is available. Additionally, 'extra precise' and 'vertical (shaft-up)' options exist for even greater mounting flexibility. A Kinetix MMA motor with 'extra precise flange' option is the same as a standard flange, but with tighter tolerance for run-out and planarity of the key surface features. Some flanges (shaft height dependent) can be prepared for 'vertical (shaft-up)' mounting. There is no change to the actual flange surface, but rather a spring-loaded feature has been added to the bearings for greater support of the load while the motor is mounted in this vertical position. See Motor Catalog Number Explanation and Dimensions - Kinetix MMA Asynchronous Main Motors on page 194 for important dependencies and more details.

Certifications Options

Kinetix MMA motors, like all Kinetix products, come standard with many pre-qualified global certifications (see Certifications - Kinetix Rotary Motion on page 208). For the Kinetix MMA motor, you can choose whether to have cURus (UL/CSA) certification, which is a requirement for operation in some countries, but not all countries. If your installation does not require cURus certification, the standard insulation system is sufficient, and the additional insulation, protection, and third-party verification requirements can be avoided in your catalog configuration process.

Protection Options

Kinetix MMA main motors come standard with IP54 ingress protection rating, but can be configured for IP55 and other increased protective options. For high-humidity environments, a 'tropical' windings option is available. This option is a special varnish that is applied to the motor windings to help prevent fungus, mold, or other unfavorable results of high-humidity conditions. Stainless steel screws can be specified for all external fasteners because of their anti-corrosion properties.

- C3 anti-corrosion: Coating is applied to motor body and end-caps for protection in industrial environments that are classified as C3 'medium' corrosion levels.
- C5 anti-corrosion: Coating is applied, before paint, to all external, non-plastic surfaces of the motor for protection in industrial (not marine) environments classified as C5 'heavy' corrosion levels. After full application, external surfaces are painted with primer and final paint with proper coating thickness. This method delivers additional protection of surfaces even if paint is nicked or scratched.

Thermal Sensor Options

Your Kinetix MMA main motor comes standard with two thermal sensors, for protection and optimal performance. A thermostat (TS) provides a normally-closed signal to the inverter, protecting the motor windings from overheating due to prolonged motor overloading or malfunction. The other thermal sensor that comes standard is a PT1000 sensor, which is an RTD-style thermistor. This PT1000 sensor, which must be connected to a 1756-IRT8I Logix thermal sensor module when using a Kinetix 5700 drive, can monitor the motor winding temperature in real-time. (If your Kinetix MMA main motor is running on a PowerFlex 750-series drive, this PT1000 thermistor is read by the drive and a specific feedback cable is required.)

Other temperature sensors are available as selectable configurations. If your system or application prefers, a KTY 84-130 RTD-style thermistor can also be embedded in the motor windings for measuring real-time temperature. Additionally, a PT100 RTD-style thermistor can be selected to monitor your MMA bearing temperatures.

For more detail on these options, dependencies, and technical detail, consult the following:

- Kinetix MMA Asynchronous Main Motors Installation Instructions, publication MM-IN001
- Kinetix Rotary and Linear Motion Cable Specifications Technical Data, publication KNX-TD004
- Knowledgebase article: Kinetix MMA Frequently Asked Questions.

Special Options

Kinetix MMA main motors can have some final, special options selected upon configuration.

- A Reinforced Insulation option is available for MMA-B132*xxx* and larger size motors where the first and last turns of the motor windings are separated and insulated for every coil. Select this option if you are using a Kinetix 5700 AFE regenerative bus supply system.
- A Vibrations certificate can be supplied with your motor, which details the test report of your rotor balancing degree (A or B, depending on your shaft selection.) This report is placed inside the motor terminal box.
- For systems and applications with shaft voltage discharge concerns, an Aegis ring can be supplied to minimize or reduce the risk of potentially damaging currents.

Absolute Encoder Kit Catalog Number Explanation

The Kinetix MMA Asynchronous Main Motor has several absolute encoder options. Each motor style and motor function requires a specific encoder. See the Encoder Catalog Number Explanation that follows for specific information.

MMx-ENC-x-xxx-x-xx-xx-x-x-x

a b c d e f g h i j

(a) Motor Type
MMA = Asynchronous Main Motor

(b) Encoder Designator
ENC = Encoder Designator

(c) Voltage Class
B = 400V AC

(d) Frame Size
080 = Shaft height 80 mm
100 = Shaft height 100 mm
132 = Shaft height 132 mm
160 = Shaft height 160 mm
180 = Shaft height 180 mm
225 = Shaft height 225 mm

(e) Stator Length
A, B, C, D, or E

(f) Rated Speed (@ Rated V AC)
06 = 580 rpm
10 = 1000 rpm
15 = 1500 rpm
18 = 1800 rpm
22 = 2200 rpm
26 = 2600 rpm

(g) Feedback Type
L2 = 2048 ppr, TTL incremental encoder
S1 = 1024 sin/cos, absolute single-turn encoder (Hiperface protocol)
S2 = 1024 sin/cos, absolute single-turn encoder, SIL 2/PLd rated (Hiperface protocol)
S3 = 2048 sin/cos, absolute single-turn encoder (EnDat protocol)
S4 = 25-bit absolute single-turn encoder (EnDat protocol)
M1 = 1024 sin/cos, absolute multi-turn encoder (Hiperface protocol)
M2 = 1024 sin/cos, absolute multi-turn encoder SIL 2/PLd rated (Hiperface protocol)
M3 = 2048 sin/cos absolute multi-turn encoder (EnDat protocol)
M4 = 25-bit absolute multi-turn encoder (EnDat protocol)

(h) Brakes *(Maximum motor speed (rpm) is limited by the brake selection.)*
2 = No brake (standard)
C = Holding brake,16 N•m, 24V DC, 4000 rpm [1]
D = Holding brake, 80 N•m, 24V DC, 3600 rpm [2]
E = Holding brake, 150…200 N•m, 24V DC, 3600 rpm [3]
F = Holding brake, 260…400 N•m, 24V DC, 3600 rpm [4]
G = Holding brake, 400…600 N•m, 24V DC, 3000 rpm [5]
H = Holding brake, 1440 N•m, 400V AC, 2300 rpm max [6]
J = Holding brake, 2400 N•m, 400V AC, 2300 rpm max [6]

(i) Blower
A = Axial blower 1-PH
B = Axial blower 3-PH [5]
C = Radial blower 3-PH
D = IC17 clean-air option (motor prepared without blower) [8][7]

(j) Bearings
A = All deep groove ball bearings
J = All roller bearings
M = All high speed bearings [9]

Note	Description
1	Shaft height 80 only
4	Shaft heights 132 and 160 only
7	IC17 clean-air option cannot come cURus certified

Note	Description
2	Shaft height 100 only
5	Shaft heights 160, 180, and 225 only
8	Not available for shaft heights 80 and 100

Note	Description
3	Shaft height 132 only
6	Shaft height 225 only
9	Not available for shaft height 80

Blower Kit Catalog Number Explanation

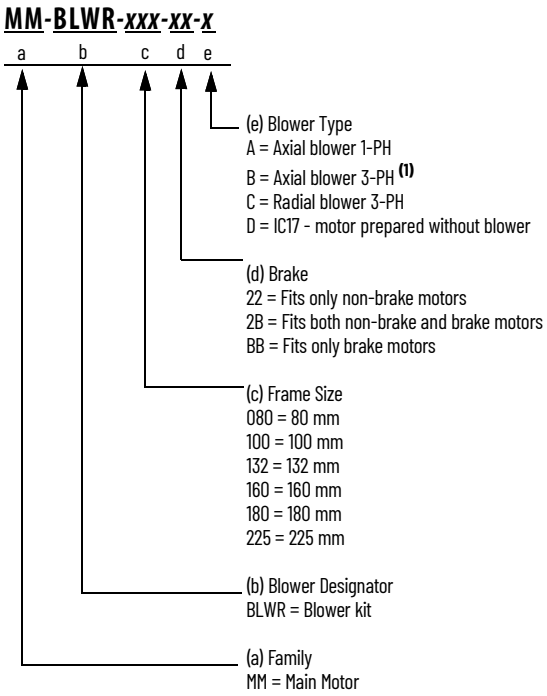

Note	Description
1	Not available for shaft height 80, 100, or 132 mm

Kinetix MMA Main Motor Cable Options

Kinetix MMA main motors have a variety of cables and wiring required to power[a], monitor, and operate the motor and it's configurable options.

- Power cables are customer supplied and connected to terminal block.
- Blower cable customer supplied.
- Space heater (optional) cable customer supplied.
- PowerFlex drive feedback cable:
  - 2090-CFBM7DF-CFAFxx (continuous-flex) flying-lead, feedback cables[b]

Motor Cat. No.	Motor Power/Brake Cable	Motor Feedback Cable [1]
MMA-B080, MMA-B100, MMA-B132, MMA-B160, MMA-B180, MMA-B225	Customer Supplied[2]	2090-CFBM7DF-CDAF*xx* (continuous-flex) 2090-CFBM7DF-CFAF*xx* (continuous-flex)[3] Absolute High-resolution Feedback

(1) Use the 2198-K57CK-D15M feedback connector kit or 2198-H2DCK Hiperface-to-DSL converter kit with flying-lead cables on the drive end.
(2) See Kinetix MMA Asynchronous Motor Frequently Asked Questions for Good Installation Processes, Knowledgebase article for additional information, "search Knowledgebase" for Kinetix MMA.
(3) Only works with PoweFlex 750-series drives.

Kinetix MMA main motors are equipped with SpeedTec DIN connectors.

SpeedTec DIN Connector

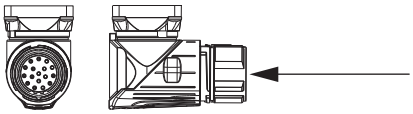

- MMA-B*xxxx* motors
- Receives M4 and M7 cable plugs (O-ring required for M4)
- Attach M7 cable plug with one-quarter turn

SpeedTec DIN (M7) Cable Plug

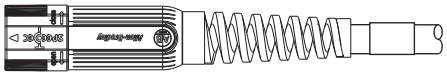

- 2090-CFBM7DF-CEAA*xx* (standard, non-flex) flying-lead, feedback cables
- 2090-CFBM7DD-CEAA*xx* (standard, non-flex) drive-end connector, feedback cables
- 2090-CFBM7DF-CEAF*xx* (continuous-flex) flying-lead, feedback cables
- 2090-CFBM7DD-CEAF*xx* (continuous-flex) drive-end connector, feedback cables
- 2090-CFBM7DF-CDAF*xx* (continuous-flex) flying-lead, feedback cables
- 2090-CFBM7DF-CFAFxx (continuous-flex) flying-lead, feedback cables

(a) See Kinetix MMA Asynchronous Motor Frequently Asked Questions for Good Installation Processes, Knowledgebase article for additional information.
(b) This (-CF) feedback cable has been specifically designed to allow PowerFlex 755 or 755T to read the PT1000 thermistor sensor in every Kinetix MMA motor. See Kinetix Rotary and Linear Motion Cable Specifications Technical Data, publication KNX-TD004 for further details on cable compatibility.

Technical Specifications - Kinetix MMA Main Motors

Kinetix MMA (400V) Motor Performance Specifications

Motor Cat. No.	Rated Speed, rpm	Maximum Speed at Rated Power (1) rpm		System Continuous Stall Torque(2) N•m (in•lb)	Peak Stall Torque N•m (in•lb)	Motor Rated Output kW (Hp)	Rotor Inertia kg-m^2 (lb•in•s^2)
		400V AC	480V AC				
MMA-B080A06	580	1400	1740	10.5 (93)	25 (221)	0.6 (0.8)	0.006 (0.0531)
MMA-B080A10	1000	2400	3000	10.0 (89)	25 (221)	1.0 (1.3)	
MMA-B080A15	1500	3600	4500	9.5 (84)	25 (221)	1.5 (2)	
MMA-B080A18	1800	4300	5400	9.5 (84)	25 (221)	1.8 (2.4)	
MMA-B080A22	2200	5200	6000	9.0 (80)	24 (214)	2.1 (2.8)	
	2200	5200	6000	9.0 (80)	25 (221)	2.1 (2.8)	
MMA-B080A26	2600	6000	6000	8.6 (76)	24 (214)	2.3 (3.1)	
	2600	6000	6000	8.6 (76)	25 (221)	2.3 (3.1)	
MMA-B080B06	580	1400	1740	15.4 (136)	35 (310)	0.9 (1.2)	0.0076 (0.067)
MMA-B080B10	1000	2400	3000	14.7 (130)	35 (310)	1.5 (2)	
MMA-B080B15	1500	3600	4500	14.0 (124)	35 (310)	2.2 (3)	
MMA-B080B18	1800	4300	5400	14.0 (124)	35 (310)	2.6 (3.5)	
MMA-B080B22	2200	5200	6000	13.3 (118)	35 (310)	3.1 (4.2)	
MMA-B080B26	2600	6000	6000	12.6 (112)	35 (310)	3.4 (4.6)	
MMA-B080C06	580	1400	1740	20.9 (185)	48 (425)	1.3 (1.7)	0.0102 (0.0903)
MMA-B080C10	1000	2400	3000	20.0 (177)	48 (425)	2.1 (2.8)	
MMA-B080C15	1500	3600	4500	19.0 (168)	48 (425)	3.0 (4)	
MMA-B080C18	1800	4300	5400	19.0 (168)	48 (425)	3.6 (4.8)	
MMA-B080C22	2200	5200	6000	18.1 (160)	48 (425)	4.2 (5.6)	
MMA-B080C26	2600	6000	6000	17.1 (151)	48 (425)	4.7 (6.3)	
MMA-B080D06	580	1400	1740	28.1 (249)	65 (575)	1.7 (2.3)	0.0137 (0.1212)
MMA-B080D10	1000	2400	3000	26.8 (237)	65 (575)	2.8 (3.8)	
MMA-B080D15	1500	3600	4500	25.5 (226)	65 (575)	4.0 (5.4)	
MMA-B080D18	1800	4300	5400	25.5 (226)	65 (575)	4.8 (6.4)	
MMA-B080D22	2200	5200	6000	24.2 (214)	65 (575)	5.6 (7.5)	
MMA-B080D26	2600	6000	6000	23.0 (204)	59 (522)	6.2 (8.3)	
					65 (575)		
MMA-B080E06	580	1400	1740	35.6 (317)	88 (779)	2.3 (3.1)	0.0163 (0.1443)
				38.5 (341)			
MMA-B080E10	1000	2400	3000	36.0 (320)	88 (779)	3.8 (5.1)	
				36.8 (326)			
MMA-B080E15	1500	3600	4500	35.0 (310)	88 (779)	5.5 (7.4)	
MMA-B080E18	1800	4300	5400	35.0 (310)	88 (779)	6.6 (8.9)	
MMA-B080E22	2200	5200	6000	33.3 (295)	88 (779)	7.7 (10.3)	
MMA-B080E26	2600	6000	6000	31.5 (279)	88 (779)	8.6 (11.5)	
MMA-B100A06	580	1400	1740	35.6 (317)	80 (708)	2.3 (3.1)	0.0229 (0.2027)
				38.5 (341)			
MMA-B100A10	1000	2400	3000	36.0 (320)	80 (708)	3.8 (5.1)	
				36.8 (326)			
MMA-B100A15	1500	3600	4500	35.0 (310)	80 (708)	5.5 (7.4)	
MMA-B100A18	1800	4300	5400	33.7 (300)	80 (708)	6.6 (8.9)	
				35.0 (310)			
MMA-B100A22	2200	5200	6000	33.3 (295)	80 (708)	7.7 (10.3)	
MMA-B100A26	2600	6000	6000	31.5 (279)	80 (708)	8.6 (11.5)	

(1) Motor may not be able to reach max speed due to mechanical limitations. Mechanical maximum speed is dependent on the bearing, brake, and encoder type.
(2) Torque values were rounded to the nearest whole number, each unit was rounded separately.

Kinetix MMA (400V) Motor Performance Specifications (Continued)

Motor Cat. No.	Rated Speed, rpm	Maximum Speed at Rated Power (1) rpm		System Continuous Stall Torque(2) N•m (in•lb)	Peak Stall Torque N•m (in•lb)	Motor Rated Output kW (Hp)	Rotor Inertia kg-m^2 (lb•in•s^2)
		400V AC	480V AC				
MMA-B100B06	580	1400	1740	52.3 (463)	120 (1062)	3.2 (4.3)	0.0298 (0.2637)
MMA-B100B10	1000	2400	3000	49.9 (442)	120 (1062)	5.2 (7)	
MMA-B100B15	1500	3600	4500	47.5 (420)	120 (1062)	7.5 (10.1)	
MMA-B100B18	1800	4300	5400	47.5 (420)	120 (1062)	9.0 (12.1)	
MMA-B100B22	2200	5200	6000	45.1 (399)	120 (1062)	10.4 (13.9	
MMA-B100B26	2600	6000	6000	42.8 (379)	120 (1062)	11.6 (15.6)	
MMA-B100C06	580	1400	1740	64.4 (570)	150 (1328)	3.9 (5.2)	0.035 (0.3098)
MMA-B100C10	1000	2400	3000	61.4 (543)	150 (1328)	6.4 (8.6)	
MMA-B100C15	1500	3600	4500	58.5 (518)	150 (1328)	9.2 (12.3)	
MMA-B100C18	1800	4300	5400	58.5 (518)	150 (1328)	11.0 (14.8)	
MMA-B100C22	2200	5200	6000	55.6 (492)	150 (1328)	12.8 (17.2)	
MMA-B100C26	2600	6000	6000	52.7 (466)	150 (1328)	14.3 (19.2)	
MMA-B100D06	580	1400	1740	77.0 (682)	180 (1593)	4.7 (6.3)	0.0418 (0.3699)
MMA-B100D10	1000	2400	3000	73.5 (651)	180 (1593)	7.7 (10.3)	
MMA-B100D15	1500	3600	4500	70.0 (620)	180 (1593)	11.0 (14.8)	
MMA-B100D18	1800	4300	5400	70.0 (620)	180 (1593)	13.2 (17.7)	
MMA-B100D22	2200	5200	6000	66.5 (589)	180 (1593)	15.3 (20.5)	
MMA-B100D26	2600	6000	6000	63.0 (558)	180 (1593)	17.2 (23.1)	
MMA-B100E06	580	1400	1740	94.6 (837)	220 (1947)	5.7 (7.6)	0.0556 (0.4921)
MMA-B100E10	1000	2400	3000	90.3 (799)	220 (1947)	9.5 (12.7)	
MMA-B100E15	1500	3600	4500	86.0 (761)	220 (1947)	13.5 (18.1)	
MMA-B100E18	1800	4300	5400	86.0 (761)	220 (1947)	16.2 (21.7)	
MMA-B100E22	2200	5200	6000	81.7 (723)	185 (1651)	18.8 (25.2)	
					220 (1947)		
MMA-B100E26	2600	6000	6000	77.4 (685)	158 (1403)	21.1 (28.3)	
					220 (1947)		
MMA-B132A06	580	1400	1740	105.0 (929)	200 (1770)	6.4 (8.6)	0.075 (0.664)
MMA-B132A10	1000	2400	3000	100.0 (885)	200 (1770)	10.5 (14.1)	
MMA-B132A15	1500	3600	4500	95.5 (845)	200 (1770)	15.0 (20.1)	
MMA-B132A18	1800	4300	5400	95.5 (845)	200 (1770)	18.0 (24.1)	
MMA-B132A22	2200	5200	6000	90.7 (803)	200 (1770)	20.9 (28)	
MMA-B132A26	2600	6000	6000	86.0 (761)	200 (1770)	23.4 (31.4)	
MMA-B132B06	580	1400	1740	108.0 (962)	240 (2124)	8.1 (10.9)	0.093 (0.823)
				133.0 (1177)			
MMA-B132B10	1000	2400	3000	112.0 (996)	240 (2124)	13.3 (17.8)	
				127.0 (1124)			
MMA-B132B15	1500	3600	4500	121.0 (1071)	240 (2124)	19.0 (25.5)	
MMA-B132B18	1800	4300	5400	120.0 (1071)	240 (2124)	22.8 (30.6)	
				121.0 (1071)			
MMA-B132B22	2200	5200	6000	115.0 (1018)	240 (2124)	26.5 (35.5)	
MMA-B132B26	2600	6000	6000	109.0 (965)	240 (2124)	29.6 (39.7)	

(1) Motor may not be able to reach max speed due to mechanical limitations. Mechanical maximum speed is dependent on the bearing, brake, and encoder type.
(2) Torque values were rounded to the nearest whole number, each unit was rounded separately.

Kinetix MMA (400V) Motor Performance Specifications (Continued)

Motor Cat. No.	Rated Speed, rpm	Maximum Speed at Rated Power (1) rpm		System Continuous Stall Torque(2) N•m (in•lb)	Peak Stall Torque N•m (in•lb)	Motor Rated Output kW (Hp)	Rotor Inertia kg-m^2 (lb•in•s^2)
		400V AC	480V AC				
MMA-B132C06	580	1400	1740	154 (1363)	280 (2478)	9.4 (12.6)	0.109 (0.965)
MMA-B132C10	1000	2400	3000	114 (1013) 147 (1301)	280 (2478)	15.4 (20.7)	
MMA-B132C15	1500	3600	4500	140 (1239)	280 (2478)	22.0 (29.5)	
MMA-B132C18	1800	4300	5400	140 (1239)	280 (2478)	26.4 (35.4)	
MMA-B132C22	2200	5200	6000	133 (1177)	280 (2478)	30.6 (41)	
MMA-B132C26	2600	6000	6000	126 (1115)	256 (2281) 280 (2478)	34.3 (46)	
MMA-B132D06	580	1400	1740	175 (1549)	320 (2832)	10.6 (14.2)	0.123 (1.089)
MMA-B132D10	1000	2400	3000	167 (1478)	320 (2832)	17.5 (23.5)	
MMA-B132D15	1500	3600	4500	159 (1407)	320 (2832)	25.0 (33.5)	
MMA-B132D18	1800	4300	5400	159 (1407)	320 (2832)	30.0 (40.2)	
MMA-B132D22	2200	5200	6000	151 (1336)	301 (2683) 320 (2832)	34.8 (46.7)	
MMA-B132D26	2600	6000	6000	143 (1266)	316 (2813) 320 (2832)	39.0 (52.3)	
MMA-B132E06	580	1400	1740	191 (1702) 217 (1921)	400 (3540)	13.2 (17.7)	0.151 (1.336)
MMA-B132E10	1000	2400	3000	207 (1832)	400 (3540)	21.7 (29.1)	
MMA-B132E15	1500	3600	4500	198 (1752)	400 (3540)	31.0 (41.6)	
MMA-B132E18	1800	4300	5400	198 (1752)	400 (3540)	37.2 (49.9)	
MMA-B132E22	2200	5200	6000	188 (1664)	386 (3431) 400 (3540)	43.2 (57.9)	
MMA-B132E26	2600	6000	6000	178 (1575)	400 (3540)	48.4 (64.9)	
MMA-B160A06	580	1400	1740	196 (1749) 252 (2230)	450 (3983)	15.3 (20.5)	0.255 (2.257)
MMA-B160A10	1000	2400	3000	240 (2124)	450 (3983)	25.2 (33.8)	
MMA-B160A15	1500	3600	4500	225 (2001) 229 (2027)	450 (3983)	36.0 (48.3)	
MMA-B160A18	1800	4300	5400	218 (1925)	450 (3983)	41.0 (55)	
MMA-B160A22	2200	5200	6000	195 (1729)	450 (3983)	45.0 (60.3)	
MMA-B160A26	2600	6000	6000	173 (1528)	450 (3983)	47.0 (63)	
MMA-B160B06	580	1400	1740	294 (2602)	520 (4602)	17.9 (24)	0.29 (2.567)
MMA-B160B10	1000	2400	3000	281 (2487)	520 (4602)	29.4 (39.4)	
MMA-B160B15	1500	3600	4500	268 (2372)	520 (4602)	42.0 (56.3)	
MMA-B160B18	1800	4300	5400	239 (2113)	520 (4602)	45.0 (60.3)	
MMA-B160B22	2200	5200	6000	213 (1882)	520 (4602)	49.0 (65.7)	
MMA-B160B26	2600	6000	6000	202 (1788)	520 (4602)	55.0 (73.8)	
MMA-B160C06	580	1400	1740	343 (3036)	600 (5310)	20.8 (27.9)	0.341 (3.018)
MMA-B160C10	1000	2400	3000	328 (2903)	600 (5310)	34.3 (46)	
MMA-B160C15	1500	3600	4500	312 (2761)	600 (5310)	49.0 (65.7)	
MMA-B160C18	1800	4300	5400	312 (2761)	600 (5310)	58.8 (78.9)	
MMA-B160C22	2200	5200	6000	282 (2497)	600 (5310)	65.0 (87.2)	
MMA-B160C26	2600	6000	6000	250 (2210)	548 (4876) 600 (5310)	68.0 (91.2)	

(1) Motor may not be able to reach max speed due to mechanical limitations. Mechanical maximum speed is dependent on the bearing, brake, and encoder type.
(2) Torque values were rounded to the nearest whole number, each unit was rounded separately.

Kinetix MMA (400V) Motor Performance Specifications (Continued)

Motor Cat. No.	Rated Speed, rpm	Maximum Speed at Rated Power (1) rpm		System Continuous Stall Torque(2) N•m (in•lb)	Peak Stall Torque N•m (in•lb)	Motor Rated Output kW (Hp)	Rotor Inertia kg-m^2 (lb•in•s^2)
		400V AC	480V AC				
MMA-B160D06	580	1400	1740	367 (3267) 385 (3408)	700 (6196)	23.4 (31.4)	0.387 (3.425)
MMA-B160D10	1000	2400	3000	368 (3257)	700 (6196)	38.5 (51.6)	
MMA-B160D15	1500	3600	4500	350 (3098)	700 (6196)	55.0 (73.8)	
MMA-B160D18	1800	4300	5400	350 (3098)	700 (6196)	66.0 (88.5)	
MMA-B160D22	2200	5200	6000	333 (2947)	639 (5689) 700 (6196)	76.6 (102.7)	0.387 (3.425)
MMA-B160D26	2600	6000	6000	315 (2788)	640 (5696) 700 (6196)	85.8 (115.1)	
MMA-B180A06	580	1400	1740	371 (3284)	730 (6461)	22.6 (30.3)	0.49 (4.337)
MMA-B180A10	1000	2400	3000	358 (3169)	730 (6461)	37.4 (50.2)	
MMA-B180A15	1500	3600	4500	337.5 (2987)	730 (6461)	53.0 (71.1)	
MMA-B180A18	1800	4300	5400	327 (2894)	730 (6461)	61.6 (82.6)	
MMA-B180A22	2200	5200	6000	285 (2522)	640 (5696) 730 (6461)	65.7 (88.1)	
MMA-B180B06	580	1400	1740	495 (4381)	1000 (8851)	30.1 (40.4)	0.69 (6.107)
MMA-B180B10	1000	2400	3000	477 (4222)	1000 (8851)	49.9 (66.9)	
MMA-B180B15	1500	3600	4500	446 (3947)	939 (8360) 1000 (8851)	70.0 (93.9)	
MMA-B180B18	1800	4300	5400	436 (3859)	780 (6946) 926 (8240) 1000 (8851)	82.1 (110.1)	
MMA-B180B22	2200	5200	6000	381 (3372)	1000 (8851)	87.7 (117.6)	
MMA-B180C06	580	1400	1740	557 (4930)	1122 (9988) 1200 (10621)	33.8 (45.3)	0.81 (7.169)
MMA-B180C10	1000	2400	3000	536 (4744)	1200 (10621)	56.2 (75.4)	
MMA-B180C15	1500	3600	4500	510 (4514)	936 (8335) 1111 (9888) 1200 (10621)	80.0 (107.3)	
MMA-B180C18	1800	4300	5400	490 (4337)	927 (8248) 1200 (10621)	92.3 (123.8)	
MMA-B180C22	2200	5200	6000	428 (3788)	729 (6759) 1200 (10621)	98.6 (132.2)	
MMA-B180D06	580	1400	1740	618 (5470)	1400 (12391)	37.5 (50.3)	0.92 (8.143)
MMA-B180D10	1000	2400	3000	595 (5266)	1400 (12391)	62.3 (83.5)	
MMA-B180D15	1500	3600	4500	560 (4956)	1109 (9867) 1400 (12391)	88.0 (118)	
MMA-B180D18	1800	4300	5400	544 (4815)	927 (8254) 1400 (12391)	102.0 (136.8)	
MMA-B180D22	2200	5200	6000	475 (4204)	1400 (12391)	109.0 (146.2)	
MMA-B225A06	580	1400	1740	651 (5762)	1200 (10621)	39.6 (53.1)	1.48 (13.099)
MMA-B225A10	1000	2400	3000	627 (5549)	1200 (10621)	65.7 (88.1)	
MMA-B225A15	1500	3600	4500	586 (5187)	1200 (10621)	92.0 (123.4)	
MMA-B225A18	1800	4300	4799	573 (5071)	1200 (10621)	108.0 (144.8)	

(1) Motor may not be able to reach max speed due to mechanical limitations. Mechanical maximum speed is dependent on the bearing, brake, and encoder type.
(2) Torque values were rounded to the nearest whole number, each unit was rounded separately.

Kinetix MMA (400V) Motor Performance Specifications (Continued)

Motor Cat. No.	Rated Speed, rpm	Maximum Speed at Rated Power (1) rpm		System Continuous Stall Torque(2) N•m (in•lb)	Peak Stall Torque N•m (in•lb)	Motor Rated Output kW (Hp)	Rotor Inertia kg-m^2 (lb•in•s^2)
		400V AC	480V AC				
MMA-B225B06	580	1400	1740	778 (6886)	1500 (13276)	47.2 (63.3)	1.74 (15.400)
MMA-B225B10	1000	2400	3000	749 (6629)	1365 (12148) 1500 (13276)	78.4 (105.1)	
MMA-B225B15	1500	3600	4500	703 (6222)	1500 (13276)	110.0 (147.5)	
MMA-B225B18	1800	4300	4799	684 (6054)	1500 (13276)	129.0 (173)	
MMA-B225C06	580	1400	1740	855 (7567)	1800 (15931)	51.9 (69.6)	1.99 (17.613)
MMA-B225C10	1000	2400	3000	824 (7293)	1609 (14322) 1800 (15931)	86.2 (115.6)	
MMA-B225C15	1500	3600	4500	767 (6789)	1800 (15931)	120.0 (160.9)	
MMA-B225C18	1800	4300	4799	752 (6656)	1800 (15931)	142.0 (190.4)	
MMA-B225D06	580	1400	1740	1001 (8860)	2274 (20239) 2300 (20357)	60.8 (81.5)	2.55 (22.569)
MMA-B225D10	1000	2400	3000	964 (8532)	1616 (14384) 2300 (20357)	101.0 (135.4)	
MMA-B225D15	1500	3600	4500	890 (7877)	2300 (20357)	140.0 (187.7)	
MMA-B225D18	1800	4300	4799	881 (7798)	2300 (20357)	166.0 (222.6)	
MMA-B225E06	580	1400	1740	1239 (10966)	2264 (20152) 2600 (23012)	75.3 (101)	3.25 (28.765)
MMA-B225E10	1000	2400	3000	1193 (10559)	2600 (23012)	125.0 (167.6)	
MMA-B225E15	1500	3600	4500	1115 (9869)	2600 (23012)	175.0 (234.7)	
MMA-B225E18	1800	4300	4799	1090 (9647)	2600 (23012)	205.0 (274.9)	

(1) Motor may not be able to reach max speed due to mechanical limitations. Mechanical maximum speed is dependent on the bearing, brake, and encoder type.
(2) Torque values were rounded to the nearest whole number, each unit was rounded separately.

Approximate Motor Weight

Motor Catalog Number (1)	Brake Weight (2) Brake Cat. No. kg (lb)	Blower Weight kg (lb)	Motor Weight kg (lb)
MMA-B080Axx-xxxx22xxxxxx	Cx 2.5 (5.5)	Axial Only 2.0 (4.4)	23.0 (50.71)
MMA-B080Bxx-xxxx22xxxxxx			27.0 (59.52)
MMA-B080Cxx-xxxx22xxxxxx			31.0 (68.34)
MMA-B080Dxx-xxxx22xxxxxx			37.0 (81.57)
MMA-B080Exx-xxxx22xxxxxx			45.0 (99.21)
MMA-B100Axx-xxxx22xxxxxx	Dx 7.0 (15.4)	Axial Only 3.5 (7.7)	44.0 (97.00)
MMA-B100Bxx-xxxx22xxxxxx			53.0 (116.85)
MMA-B100Cxx-xxxx22xxxxxx			60.0 (132.27)
MMA-B100Dxx-xxxx22xxxxxx			70.0 (154.32)
MMA-B100Exx-xxxx22xxxxxx			82.0 (180.78)
MMA-B132Axx-xxxx22xxxxxx	Ex 15.0 (33.1) F4, F5 22.0 (48.5)	Axial 7.0 (15.43) Radial 9.0 (19.8)	94.0 (207.24)
MMA-B132Bxx-xxxx22xxxxxx			109.0 (240.30)
MMA-B132Cxx-xxxx22xxxxxx			122.0 (268.96)
MMA-B132Dxx-xxxx22xxxxxx			135.0 (297.62)
MMA-B132Exx-xxxx22xxxxxx			157.0 (346.13)
MMA-B160Axx-xxxx22xxxxxx	Fx 22.0 (48.5) G4, G5 33.0 (72.8)	Axial 10.0 (22.1) Radial 19.0 (41.9)	201.0 (443.13)
MMA-B160Bxx-xxxx22xxxxxx			220.0 (485.02)
MMA-B160Cxx-xxxx22xxxxxx			247.0 (544.54)
MMA-B160Dxx-xxxx22xxxxxx			276.0 (608.48)

Approximate Motor Weight

Motor Catalog Number (1)	Brake Weight (2) Brake Cat. No. kg (lb)	Blower Weight kg (lb)	Motor Weight kg (lb)
MMA-B180Axx-xxxx22xxxxxx	Gx 33.0 (72.8)	Axial 28.0 (61.7) Radial 32.0 (70.6)	390.0 (859.80)
MMA-B180Bxx-xxxx22xxxxxx			480.0 (1058.22)
MMA-B180Cxx-xxxx22xxxxxx			535.0 (1179.47)
MMA-B180Dxx-xxxx22xxxxxx			580.0 (1278.68)
MMA-B225Axx-xxxx22xxxxxx	Gx 33.0 (72.8) Hx 95.0 (209.4) Jx 95.0 (209.4)	Axial 36.0 (79.4) Radial 44.0 (97.0)	730.0 (1609.37)
MMA-B225Bxx-xxxx22xxxxxx			810.0 (1785.74)
MMA-B225Cxx-xxxx22xxxxxx			890.0 (1962.11)
MMA-B225Dxx-xxxx22xxxxxx			1020.0 (2244.72)
MMA-B225Exx-xxxx22xxxxxx			1175.0 (2590.43)

(1) To determine total weight of the motor with the brake and the blower, you must add these three columns together based on your motor catalog selections.
(2) Unless otherwise indicated, all brake variations for a given character are available for the shaft height groups. See Motor Catalog Number Explanation.

Kinetix MMA Main Motor Brake Specifications

Motor Cat. No.	Holding Torque N•m (lb•in)	Holding Torque with Hand Release Option N•m (lb•in)	Rated Supply Voltage	Rated Current A	Brake Response Time		Brake Rotor Inertia kg-m^2 (lb•in•s^2)	Max. Allowable Speed (rpm)
					Release ms	Engage ms		
MMA-B080xxx-xxxxCx	16 (141)	16 (141)	24V DC	1.25	76	47	0.0002 (0.0018)	4000
MMA-B100xxx-xxxxDx	80 (708)	80 (708)	24V DC	2.08	210	42	0.00063 (0.0056)	3600
MMA-B132xxx-xxxxEx	200 (1770)	150 (1327)	24V DC	3.54	270	78	0.0029 (0.026)	3600
MMA-B132xxx-xxxxFx	400 (3540)	260 (2301)	24V DC	4.16	340	165	0.0073 (0.065)	3600
MMA-B160xxx-xxxxFx	400 (3540)	260 (2301)	24V DC	4.16	340	165	0.0073 (0.065)	3600
MMA-B160xxx-xxxxGx	600 (5310)	400 (3540)	24V DC	4.58	390	230	0.02 (0.18)	3000
MMA-B180xxx-xxxxGx	600 (5310)	400 (3540)	24V DC	4.58	390	230	0.02 (0.18)	3000
MMA-B225xxx-xxxxGx	600 (5310)	400 (3540)	24V DC	4.58	390	230	0.02 (0.18)	3000
MMA-B225xxx-xxxxHx	1440 (12745)	—	400V AC	—	250	198	0.0457 (0.4)	2300
MMA-B225xxx-xxxxJx	2400 (21241)	—	400V AC	—	250	198	0.0457 (0.4)	2300

Notes:

Dimensions - Kinetix MMA Asynchronous Main Motors

MMA-B080*xxx* Motor Dimensions

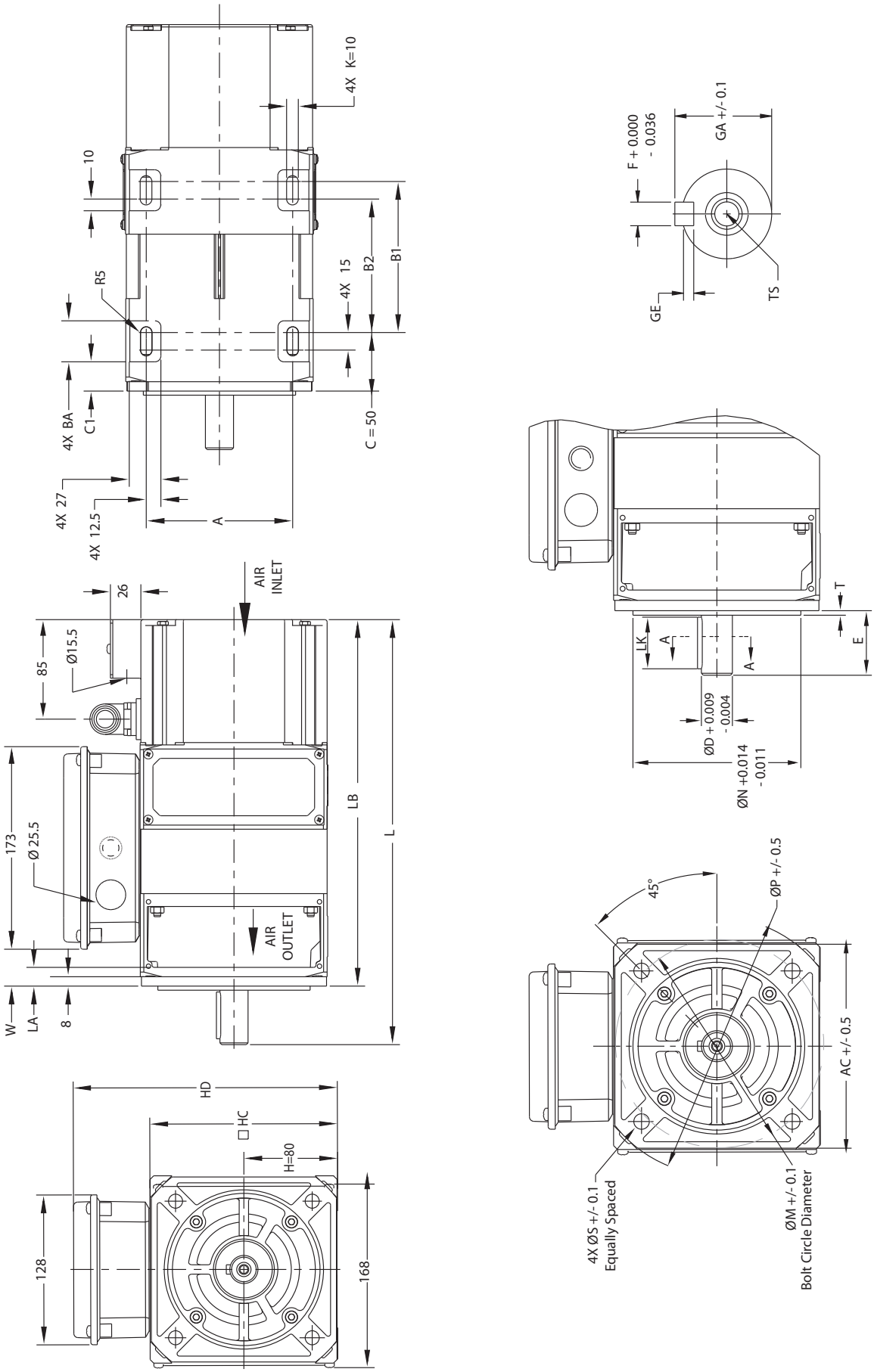

MMA-B080*xxx* Motor Dimensions

Motor Cat. No.	A mm (in.)	B2 mm (in.)	B1 mm (in.)	BA mm (in.)	C1 mm (in.)	L (1) (2) (3) mm (in.)	LA mm (in.)	LB (1) (2) (4) mm (in.)	W (2) (4) mm (in.)	H mm (in.)	HC mm (in.)	HD mm (in.)	K mm (in.)
MMA-B080A*xx*	125 (4.92)	114 (4.49)	129 (5.08)	35 (1.38)	25 (0.98)	365 (14.37)	16 (0.63)	315 (12.40)	31 (1.22)	80 (3.15)	160 (6.30)	225 (8.86)	10 (0.39)
MMA-B080B*xx*		139 (5.47)	154 (6.06)			390 (15.35)		340 (13.39)	56 (2.20)				
MMA-B080C*xx*		164 (6.46)	179 (7.04)			425 (16.73)		365 (14.37)	81 (3.19)				
MMA-B080D*xx*		204 (8.03)	219 (8.62)			465 (18.31)		405 (15.94)	121 (4.76)				
MMA-B080E*xx*		259 (10.20)	274 (10.79)			520 (20.47)		460 (18.11)	176 (6.93)				

(1) For all motors except those with no holding brake, catalog option (MMA-B080*xxx-xxxx*22*xxxxxxx*) add 80 mm (3.15 in.) to dimension L and LB.
(2) For shaft options check shaft and key dimension table.
(3) When the reduced shaft option is selected (Shaft Codes: N, P, Q, R, S, T) length L is reduced by 10 mm (0.39 in.).
(4) When the increased flange option is selected (Flange Codes: E, F, G) dimension LB, C, and W increases by 10 mm (0.39 in.).

MMA-B080*xxx* Shaft Dimensions

Motor Cat. No.	Shaft Options	F mm (in.)	GA mm (in.)	GE mm (in.)	LK mm (in.)	D mm (in.)	E (1) mm (in.)	TS
MMA-B080A*xx* MMA-B080B*xx*	A, B, C, D	8 (0.31)	27 (1.06)	4 (0.16)	40 (1.57)	24 (0.94)	50 (1.97)	M8
	E, F	NA						
MMA-B080C*xx* MMA-B080D*xx* MMA-B080E*xx*	A, B, C, D	8 (0.31)	31 (1.22)	4 (0.16)	50 (1.97)	28 (1.10)	60 (2.36)	M10
	E, F	NA						
MMA-B080C*xx*	N, P, Q, R	8 (0.31)	27 (1.06)	4 (0.16)	40 (1.57)	24 (0.94)	50 (1.97)	M8
	S, T	NA						

(1) When increased dimension flange option selected (Flange Codes: E, F, G) length of the shaft reduces by 10 mm (0.39 in.).

MMA-B080*xxx* Flange Dimensions

Motor Cat. No.	Flange Options	Bolt Circle Diameter M mm (in.)	MIG Hole Diameter S mm (in.)	Pilot Diameter N mm (in.)	Pilot Thickness T mm (in.)	Max Flange Outer Diameter P mm (in.)	Flange Width Square AC mm (in.)
MMA-B080A*xx*	A, B, C, D	165 (6.50)	12 (0.47)	130 (512)	3.5 (0.14)	200 (7.87)	158 (6.22)
MMA-B080B*xx* MMA-B080C*xx* MMA-B080D*xx* MMA-B080E*xx*	E, F, G	215 (8.46)	14.5 (0.57)	180 (7.09)	4 (0.16)	250 (9.84)	210 (8.27)

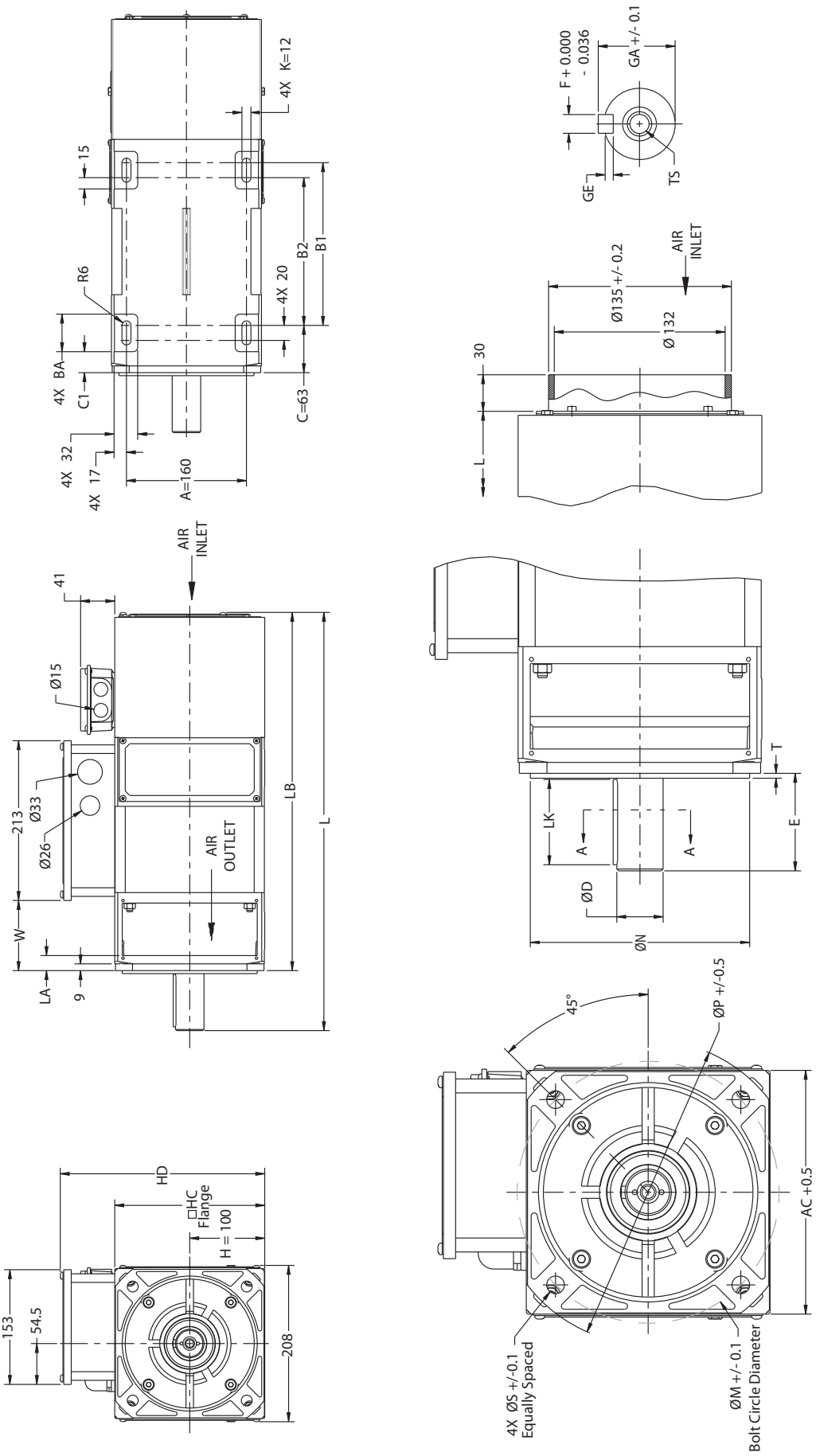

MMA-B100xxx Motor Dimensions

MMA-B100*xxx* Motor Dimensions

Motor Cat. No.	A mm (in.)	B2 mm (in.)	B1 mm (in.)	BA mm (in.)	C mm (in.)	C1 mm (in.)	L (1) (2) (3) mm (in.)	LA mm (in.)	LB (1) (2) (4) mm (in.)	W (2) (4) mm (in.)	H mm (in.)	HC mm (in.)	HD mm (in.)	K mm (in.)
MMA-B100A*xx*	160 (6.30)	197 (7.76)	217 (8.54)	50 (1.97)	63 (2.48)	28 (1.10)	560 (22.04)	20 (0.79)	480 (18.90)	93 (3.66)	100 (3.93)	200 (7.87)	273 (10.75)	12 (0.47)
MMA-B100B*xx*		237 (9.33)	257 (10.12)				600 (23.62)		520 (20.47)	133 (5.24)				
MMA-B100C*xx*		267 (10.51)	287 (11.30)				630 (24.80)		550 (21.65)	163 (6.42)				
MMA-B100D*xx*		307 (12.09)	327 (12.87)				670 (26.38)		590 (23.23)	203 (7.99)				
MMA-B100E*xx*		362 (14.25)	382 (15.04)				725 (28.54)		645 (25.39)	258 (10.16)				

(1) For all motors except those with no holding brake, catalog option (MMA-B100*xxx-xxxx*22*xxxxxxx*) add 80 mm (3.15 in.) to dimension L and LB.
(2) For shaft options check shaft and key dimension table.
(3) When the reduced shaft option is selected (Shaft Codes: N, P, Q, R, S, T) length L is reduced by 10 mm (0.39 in.).
(4) When the increased flange option is selected (Flange Codes: E, F, G) dimension LB, C, and W increases by 10 mm (0.39 in.).

MMA-B100*xxx* Shaft Dimensions

Motor Cat. No.	Shaft Options	F mm (in.)	GA mm (in.)	GE mm (in.)	LK mm (in.)	D mm (in.)	E (1) mm (in.)	TS
MMA-B100A*xx*	A, B, C, D	10 (0.39)	41 (1.61)	5 (0.20)	70 (2.76)	38 (1.50)	80 (3.15)	M12
MMA-B100B*xx* MMA-B100C*xx* MMA-B100D*xx* MMA-B100E*xx*	E, F	NA						
MMA-B100A*xx*	N, P, Q, R	8 (0.31)	31 (1.22)	4 (0.16)	50 (1.20)	28 (1.10)	60 (2.36)	M10
	S, T	NA						

(1) When increased dimension flange option is selected (Flange Codes: E, F, G), the length of the shaft reduces by 10 mm (0.39 in.).

MMA-B100*xxx* Flange Dimensions

Motor Cat. No.	Flange Options	Bolt Circle Diameter M mm (in.)	MIG Hole Diameter S mm (in.)	Pilot Diameter N mm (in.)	Pilot Thickness T mm (in.)	Max Flange Outer Diameter P mm (in.)	Flange Width Square AC mm (in.)
MMA-B100A*xx*	A, B, C, D	215 (8.46)	14.5 (0.57)	180 (7.09)	4 (0.16)	250 (9.84)	198 (7.80)
MMA-B100B*xx* MMA-B100C*xx* MMA-B100D*xx* MMA-B100E*xx*	E, F, G	265 (10.43)	14.5 (0.57)	230 (9.06)	4 (0.16)	300 (11.81)	250 (9.84)

MMA-B132xxx Motor Dimensions

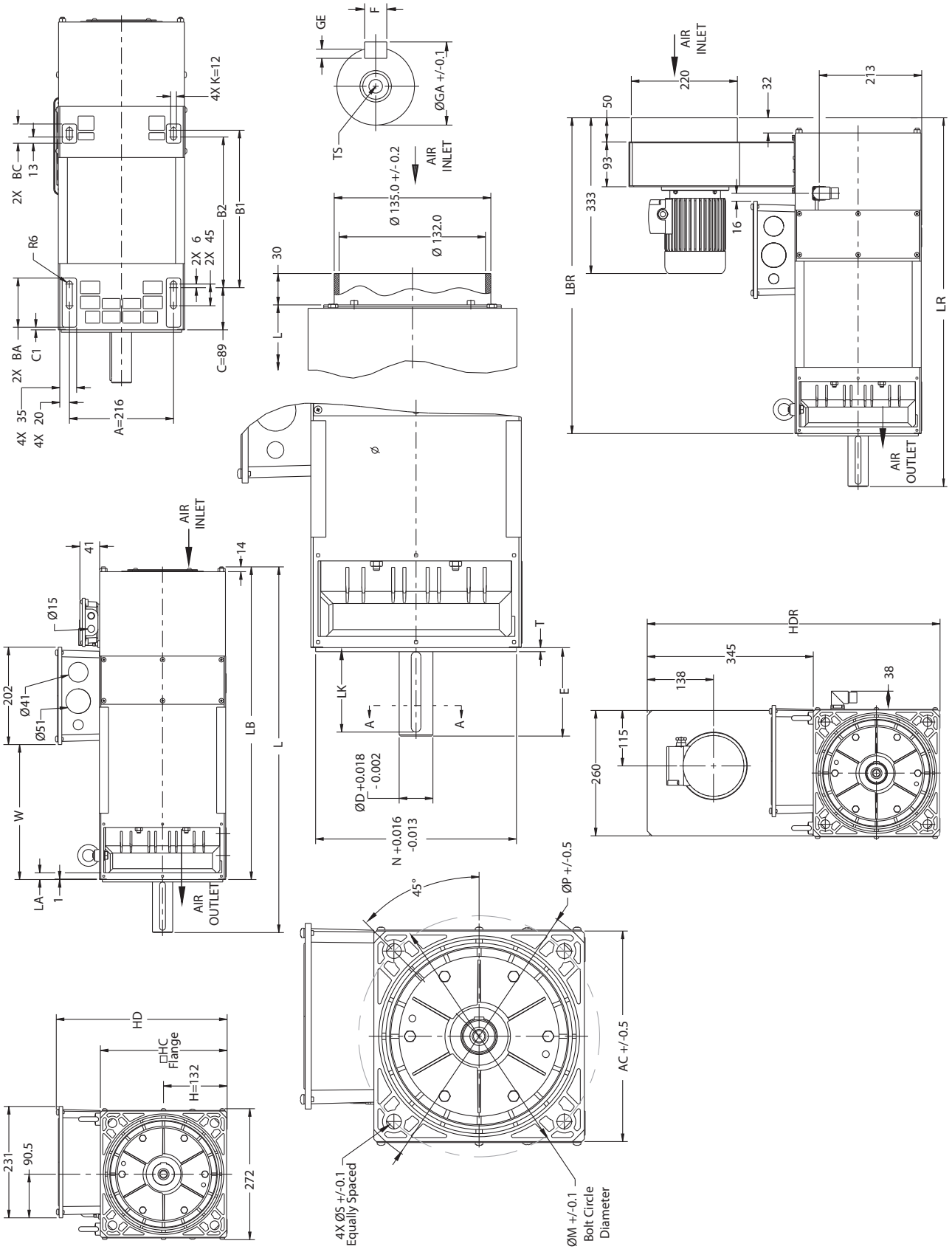

MMA-B132*xxx* Motor Dimensions [1]

Motor Cat. No.	A mm (in.)	B2 mm (in.)	B1 mm (in.)	BA mm (in.)	BC mm (in.)	C mm (in.)	C1 mm (in.)	L [2] [3] mm (in.)	LR [3][4] mm (in.)	LA mm (in.)	LB [2] mm (in.)	LBR [4] mm (in.)	W mm (in.)	H mm (in.)	HC mm (in.)	HD mm (in.)	HDR mm (in.)	K mm (in.)
MMA-B132A*xx*	216 (8.50)	236 (10.35)	250 (9.84)	102 (4.02)	40 (1.57)	89 (3.50)	5.5 (0.22)	690 [5] (27.17)	690 [5] (27.17)	14 (0.55)	580 (22.83)	580 (22.83)	205 (807)	132 (5.20)	263 (10.35)	354 (13.94)	608 (23.94)	12 (0.47)
MMA-B132B*xx*		276 (10.87)	290 (11.42)					730 [5] (28.74)	730 [5] (28.74)		620 (24.41)	620 (24.41)	245 (9.65)					
MMA-B132C*xx*		311 (12.24)	325 (12.80)					765 [5] (30.12)	765 [5] (30.12)		655 (25.79)	655 (25.79)	280 (11.02)					
MMA-B132D*xx*		341 (13.43)	355 (13.98)					795 (31.30)	795 (31.30)		685 (26.97)	685 (26.97)	310 (12.20)					
MMA-B132E*xx*		401 (15.79)	415 (16.34)					855 (33.66)	855 (33.66)		745 (29.33)	745 (29.33)	370 (14.57)					

(1) LR, LBR, and HDR are specific to radial motors. L, LB, and HD are specific to axial motors.
(2) For all motors except those with no holding brake, catalog option (MMA-B132*xxx-xxxx22xxxxxxx*), add 115 mm (4.53 in.) to dimension L and LB.
(3) For shaft options check shaft and key dimension table.
(4) For all radial blower motors except those with no holding brake, catalog option (MMA-B132*xxx-xxxx22Cxxxxxx*), add 50 mm (1.97 in.) to dimension LR and LBR.
(5) For MMA-B132A*xx*, MMA-B132B*xx*, and MMA-B132C*xx* motors, when the reduced shaft option is selected (Shaft Codes: N, P, Q, R, S, T) length L and LR is reduced by 30 mm (1.18 in.).

MMA-B132*xxx* Flange Options

Motor Cat. No.	Flange Options	Bolt Circle Diameter M mm (in.)	MIG Hole Diameter S mm (in.)	Pilot Diameter N mm (in.)	Pilot Thickness T mm (in.)	Max Flange Outer Diameter P mm (in.)	Flange Width Square AC mm (in.)
MMA-B132A*xx*, MMA-B132B*xx*, MMA-B132C*xx*, MMA-B132D*xx*, MMA-B132E*xx*	A, B, C, D	300 (11.81)	18.5 (0.73)	250 (9.84)	5 (0.20)	350 (13.78)	262 (10.31)
	H, J, K	265 (10.43)	14.5 (0.57)	230 (9.05)	4 (0.16)	300 (11.81)	262 (10.31)

MMA-B132*xxx* Shaft Options

Motor Cat. No.	Shaft Options	Key Width F mm (in.)	Shaft Width Over Key GA mm (in.)	Depth of Keyway GE mm (in.)	Key Length LK mm (in.)	Diameter D mm (in.)	Shaft Length E mm (in.)	Thread Size TS
MMA-B132A*xx*, MMA-B132B*xx*, MMA-B132C*xx*	A, B, C, D	12 (0.47)	45 (1.77)	5 (0.20)	100 (3.94)	42 (1.65)	110 (4.33)	M16
	E, F	NA						
MMA-B132D*xx*, MMA-B132E*xx*	A, B, C, D	14 (0.55)	51.5 (2.03)	5.5 (0.22)	100 (3.94)	48 (1.89)	110 (4.33)	M20
	E, F	NA						
MMA-B132A*xx*, MMA-B132B*xx*, MMA-B132C*xx*	G, H, J, K	14 (0.55)	51.5 (2.03)	5.5 (0.22)	100 (3.94)	48 (1.89)	110 (4.33)	M20
	L, M	NA						
MMA-B132A*xx*, MMA-B132B*xx*, MMA-B132C*xx*	N, P, Q, R	10 (0.39)	41 (1.61)	5 (0.20)	70 (2.76)	38 (1.50)	80 (3.15)	M12
	S, T	NA						
MMA-B132D*xx*, MMA-B132E*xx*	N, P, Q, R	12 (0.47)	45 (1.77)	5 (0.20)	100 (3.94)	42 (1.65)	110 (4.33)	M16
	S, T	NA						

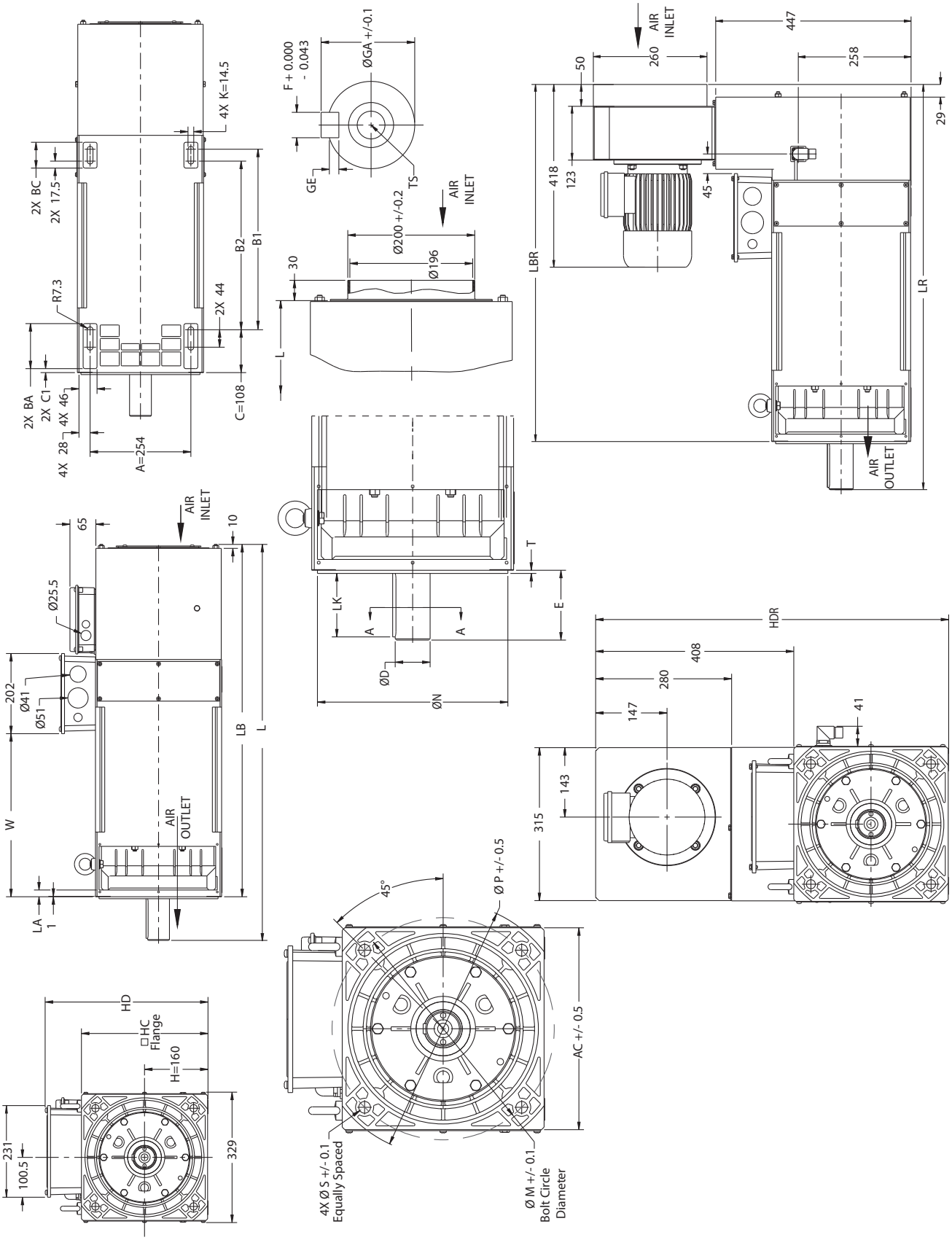
4X K=14.5
2X BC
2X 17.5
B2
B1
R7.3
2X 44
2X BA
2X C1
4X 46
4X 28
C=108
A=254
F + 0.000
- 0.043
ØGA +/-0.1
GE
TS
AIR
INLET
Ø200 +/-0.2
Ø196
30
L
LBR
LR
AIR
OUTLET
50
260
447
258
29
418
123
45
T
LK
A
A
E
ØD
ØN
65
10
Ø25.5
202
Ø41
Ø51
W
LA
1
LB
L
HDR
408
280
147
41
315
143
HD
□HC
Flange
H=160
231
100.5
329
45°
Ø P +/- 0.5
AC +/- 0.5
4X Ø S +/- 0.1
Equally Spaced
Ø M +/- 0.1
Bolt Circle
Diameter

MMA-B160*xxx* Motor Dimensions [1]

Motor Cat. No.	A mm (in.)	B2 mm (in.)	B1 mm (in.)	BA mm (in.)	BC mm (in.)	C mm (in.)	C1 mm (in.)	L [2] [3] [4] mm (in.)	LR [3] [4] [5] mm (in.)	LA mm (in.)	LB [2] mm (in.)	LBR [5] mm (in.)	W mm (in.)	H mm (in.)	HC mm (in.)	HD mm (in.)	HDR mm (in.)	K mm (in.)
MMA-B160A*xx*	254 (10.00)	340 (13.39)	370 (14.57)	114 (4.49)	65 (2.56)	108 (4.25)	10 (0.39)	915 (36.02)	845 (33.27)	17 (0.67)	805 (31.69)	735 (28.93)	326 (12.83)	160 (6.30)	319 (12.56)	410 (16.14)	727 (28.62)	14.5 (0.57)
MMA-B160B*xx*		375 (14.76)	405 (15.94)					950 (37.40)	880 (34.65)		840 (33.07)	770 (30.31)	361 (14.21)					
MMA-B160C*xx*		425 (16.73)	455 (17.91)					1000 (39.37)	930 (36.61)		890 (35.04)	820 (32.28)	411 (16.18)					
MMA-B160D*xx*		470 (18.50)	500 (19.68)					1045 (41.14)	975 (38.38)		935 (36.81)	865 (34.06)	456 (17.95)					

(1) LR, LBR, and HDR are specific to radial motors. L, LB, and HD are specific to axial motors.
(2) For all motors except those with no holding brake, catalog option (MMA-B160*xxx-xxxx22xxxxxxx*) add 155 mm (6.10 in.) to dimension L and LB.
(3) For shaft options check shaft and key dimension table.
(4) When the increased shaft option is selected (Shaft Codes: G, H, J, K, L, M), length L and LR is increased by 30 mm (1.18 in.).
(5) For all radial blower motors except those with no holding brake, catalog option (MMA-B160*xxx-xxxx22xxxxxxx*), add 50 mm (1.97 in.) to dimension LR and LBR.

MMA-B160*xx* Flange Dimensions

Motor Cat. No.	Flange Options	Bolt Circle Diameter M mm (in.)	MIG Hole Diameter S mm (in.)	Pilot Diameter N mm (in.)	Pilot Thickness T mm (in.)	Max Flange Outer Diameter P mm (in.)	Flange Width Square AC mm (in.)
MMA-B160A*xx*, MMA-B160B*xx*, MMA-B160C*xx*, MMA-B160D*xx*	A, B, C, D	350 (13.78)	18.5 (0.73)	300 (11.81)	5 (0.20)	400 (15.75)	318 (12.52)
	H, J, K	300 (11.81)	18.5 (0.73)	250 (9.84)	5 (0.20)	400 (15.75)	318 (12.52)

MMA-B160*xx* Shaft Dimensions

Motor Cat. No.	Shaft Options	Key Width F mm (in.)	Shaft Width Over Key GA mm (in.)	Depth of Keyway GE mm (in.)	Key Length LK mm (in.)	Diameter D mm (in.)	Shaft Length E mm (in.)	Thread Size TS
MMA-B160A*xx*, MMA-B160B*xx*, MMA-B160C*xx*, MMA-B160D*xx*	A, B, C, D	16 (0.63)	59 (2.32)	6 (0.24)	100 (3.94)	55 (2.17)	110 (4.33)	M20
	E, F	NA						
MMA-B160A*xx*, MMA-B160B*xx*, MMA-B160C*xx*, MMA-B160D*xx*	G, H, J, K	18 (0.71)	64 (2.52)	7 (0.28)	130 (5.12)	60 (2.36)	140 (5.51)	M20
	L, M	NA						
MMA-B160A*xx*, MMA-B160B*xx*	N, P, Q, R	14 (0.55)	51.5 (2.03)	5.5 (0.22)	100 (3.94)	48 (1.89)	110 (4.33)	M20
	S, T	NA						

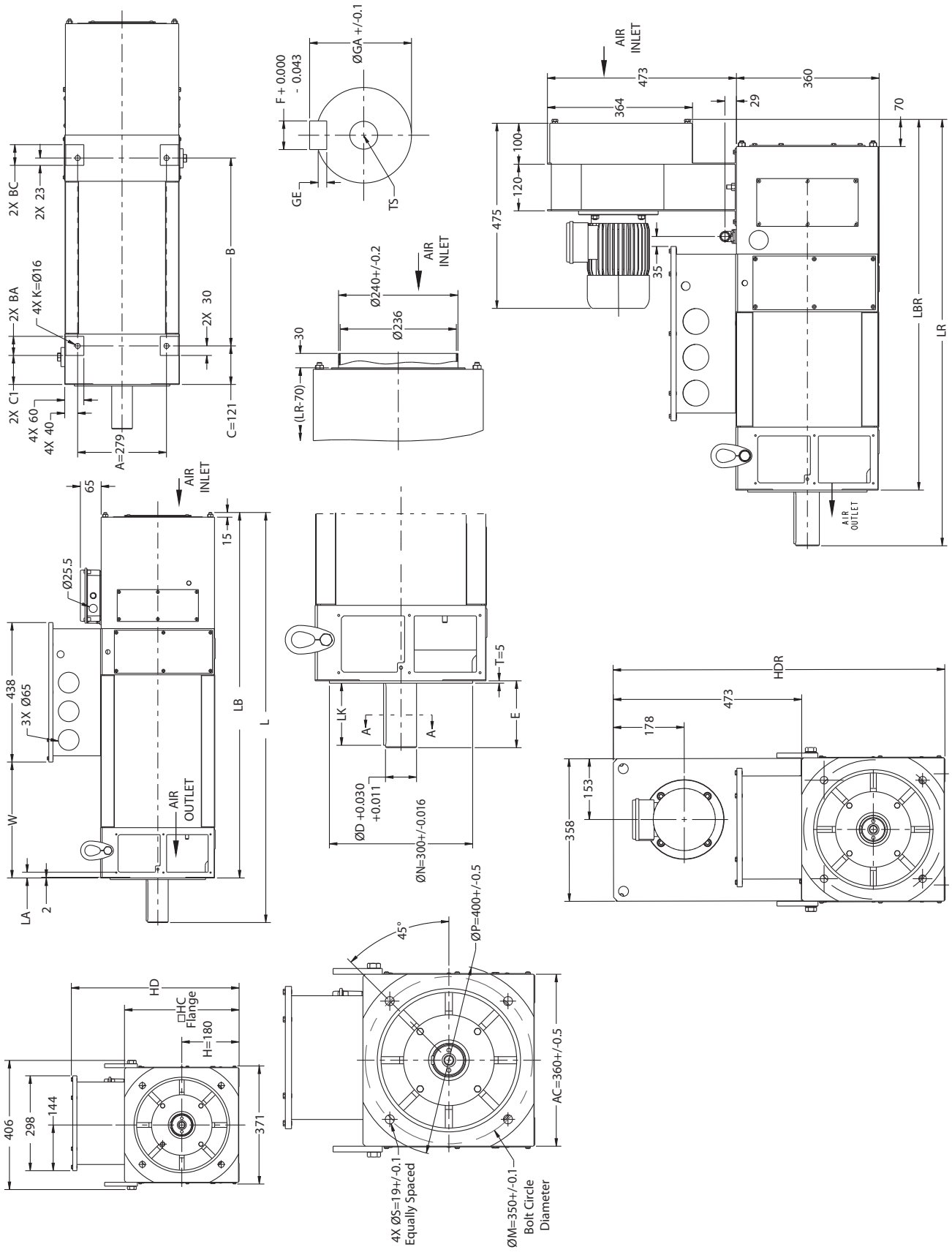
2X BC
2X 23
2X BA
4X K=Ø16
2X 30
B
2X C1
4X 60
4X 40
A=279
C=121
F + 0.000
- 0.043
ØGA +/-0.1
GE
TS
AIR
INLET
Ø240+/-0.2
Ø236
30
(LR-70)
AIR
INLET
473
364
360
29
70
100
120
475
35
LBR
LR
AIR
OUTLET
65
15
Ø25.5
438
3X Ø65
W
LB
L
AIR
OUTLET
LA
2
T=5
LK
A
A
E
ØD +0.030
+0.011
ØN=300+/-0.016
HDR
473
178
153
358
45°
ØP=400+/-0.5
HD
□HC
Flange
H=180
406
298
144
371
AC=360+/-0.5
4X ØS=19+/-0.1
Equally Spaced
ØM=350+/-0.1
Bolt Circle
Diameter

MMA-B180*xxx* Motor Dimensions [1]

Motor Series	A mm (in.)	B mm (in.)	BA mm (in.)	BC mm (in.)	C mm (in.)	C1 mm (in.)	L [2] mm (in.)	LR mm (in.)	LA mm (in.)	LB [2] mm (in.)	LBR mm (in.)	W mm (in.)	H mm (in.)	HC mm (in.)	HD mm (in.)	HDR mm (in.)	K mm (in.)
MMA-B180A*xx* MMA-B180B*xx* MMA-B180C*xx* MMA-B180D*xx*	279 (10.98)	400 (15.75)	60 (2.36)	65 (2.56)	121 (4.76)	91 (3.58)	1100 (43.31)	1075 (42.32)	18 (0.71)	960 (37.80)	935 (36.81)	174 (6.85)	180 (7.09)	360 (14.17)	527 (20.75)	833 (32.80)	Ø 16 (0.63)
		520 (20.47)					1220 (48.03)	1195 (47.04)		1080 (42.52)	1055 (41.53)	294 (11.57)					
		590 (23.23)					1290 (50.79)	1265 (49.80)		1150 (45.27)	1125 (44.29)	364 (14.33)					
		640 (25.20)					1340 (52.75)	1315 (51.77)		1200 (47.24)	1175 (46.26)	414 (16.30)					

(1) LR, LBR, and HDR are specific to radial motors. L, LB, and HD are specific to axial motors.
(2) For all motors except those with no holding brake, catalog option (MMA-B180*xxx-xxxx*22*xxxxxxx*), add 140 mm (5.51 in.) to dimension L and LB.

MMA-B180*xxx* Shaft Dimensions

Motor Cat. No.	Shaft Options	Key Width F mm (in.)	Shaft Width Over Key GA mm (in.)	Depth of Keyway GE mm (in.)	Key Length LK mm (in.)	Diameter D mm (in.)	Shaft Length E mm (in.)	Thread Size TS mm (in.)
MMA-B180A*xx*	A, B, C, D	18 (0.71)	64 (2.52)	7 (0.28)	130 (5.12)	60 (2.36)	140 (5.51)	M20
	E, F	NA						
MMA-B180B*xx*, MMA-B180C*xx*, MMA-B180D*xx*	A, B, C, D	18 (0.71)	69 (2.72)	7 (0.28)	130 (5.12)	65 (2.56)	140 (5.51)	M20
	E, F	NA						

IMPORTANT There are no flange options for MMA-B180*xxx* motors. The HDR dimension is the overall height of the radial blower.

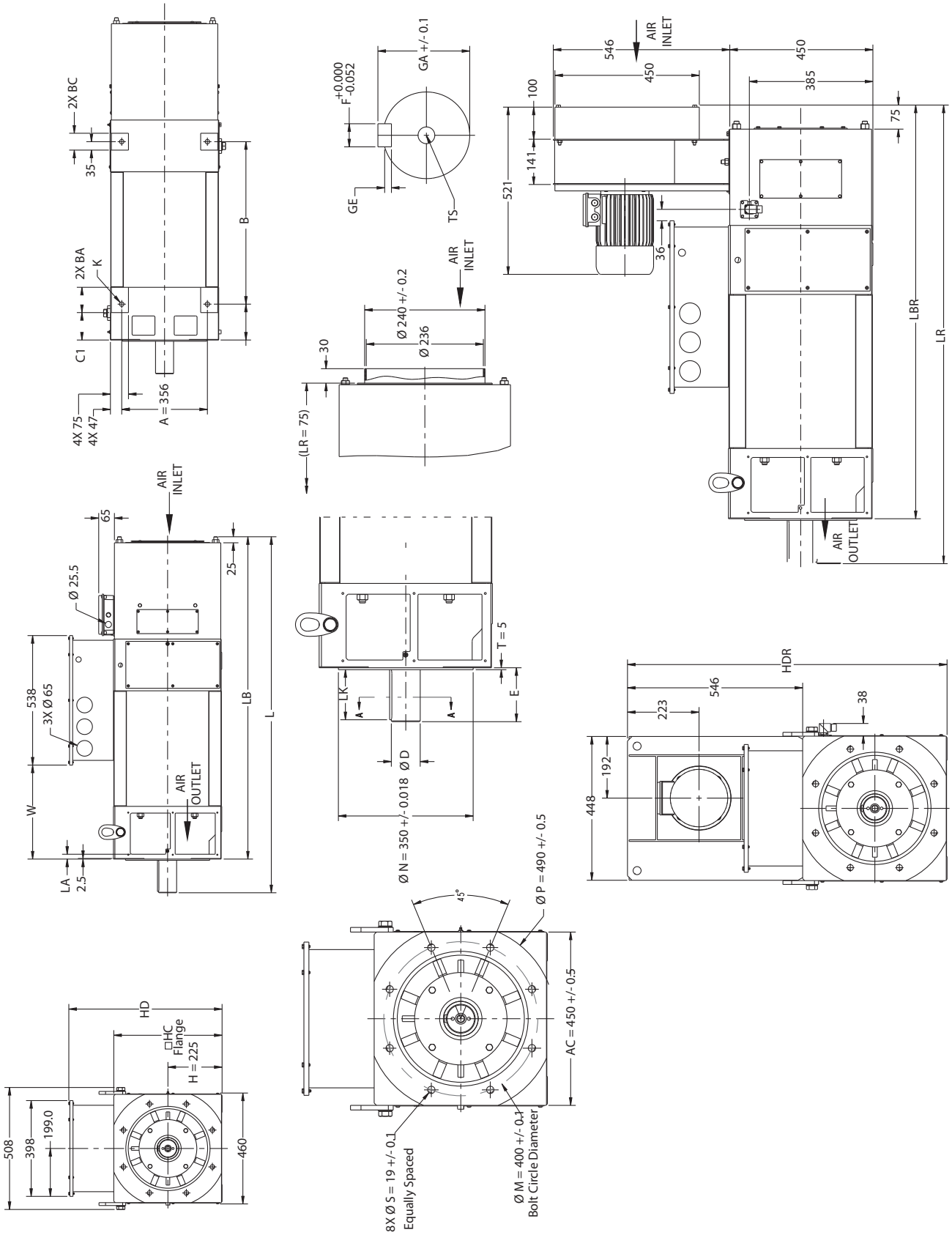
2X BC
35
B
2X BA
K
C1
A = 356
4X 75
4X 47
GA +/- 0.1
F +0.000 -0.052
GE
TS
AIR INLET
Ø 240 +/- 0.2
Ø 236
30
(LR = 75)
546
450
385
100
141
521
75
36
LBR
LR
AIR OUTLET
65
25
Ø 25.5
538
3X Ø 65
W
LA
2.5
LB
L
T = 5
LK
E
Ø N = 350 +/- 0.018
Ø D
HDR
223
38
192
448
HD
□HC Flange
H = 225
508
398
199.0
460
45°
Ø P = 490 +/- 0.5
AC = 450 +/- 0.5
8X Ø S = 19 +/- 0.1
Equally Spaced
Ø M = 400 +/- 0.1
Bolt Circle Diameter

MMA-B225*xxx* Motor Dimensions [1]

Motor Series	A mm (in.)	B mm (in.)	BA mm (in.)	BC mm (in.)	C mm (in.)	C1 mm (in.)	L [2] [3] mm (in.)	LR [3] mm (in.)	LA mm (in.)	LB [2] mm (in.)	LBR mm (in.)	W mm (in.)	H mm (in.)	HC mm (in.)	HD mm (in.)	HDR mm (in.)	K mm (in.)
MMA-B225A*xx*, MMA-B225B*xx*, MMA-B225C*xx* MMA-B225D*xx*, MMA-B225E*xx*	356 (14.02)	555 (21.85)	105 (4.13)	70 (2.76)	149 (5.87)	114 (4.50)	1365 (53.74)	1315 (51.77)	20 (0.79)	1225 (48.22)	1175 (46.26)	270 (10.63)	225 (8.86)	450 (17.71)	640 (25.20)	996 (39.21)	Ø18 (0.71)
		615 (24.21)					1425 (56.10)	1375 (54.13)		1285 (50.59)	1235 (48.62)	330 (12.99)					
		675 (26.57)					1485 (58.46)	1435 (56.50)		1345 (52.95)	1295 (50.98)	390 (15.35)					
		803 (31.61)					1645 (64.76)	1595 (62.80)		1475 (58.07)	1425 (56.10)	518 (20.39)					
		923 (36.33)					1765 (65.50)	1715 (67.52)		1595 (62.80)	1545 (60.83)	638 (25.12)					

(1) LR, LBR, HDR are specific to radial motors. L, LB, and HD are specific to axial motors.
(2) For all motors except those with no holding brake, catalog option (MMA-B225xxx-xxxx22xxxxxxx), add 160 mm (6.29 in.) to dimension L and LB.
(3) When the increased shaft option is selected (shaft codes: G,H,J,K,L,M), length L and LR is increased by 30 mm (1.18 in.).

MMA-B225*xx* Shaft Dimensions

Motor Cat. No.	Shaft Options	Key Width F	Shaft Width Over Key GA mm (in.)	Depth of Keyway GE mm (in.)	Key Length LK mm (in.)	Diameter D mm (in.)	Shaft Length E mm (in.)	Thread Size TS mm (in.)
MMA-B225A*xx*, MMA-B225*xx*, MMA-B225C*xx*	A, B, C, D	20 (0.79)	79.5 (3.13)	7.5 (0.29)	130 (5.12)	75 (2.95)	140 (5.51)	M20
	E, F	NA						
MMA-B225D*xx*, MMA-B225E*xx*	A, B, C, D	22 (0.87)	90 (3.54)	9 (0.35)	160 (6.30)	85 (3.35)	170 (6.69)	M20
	E, F	NA						
MMA-B225A*xx*, MMA-B225B*xx*, MMA-B225C*xx*	G, H, J, K	22 (0.87)	90 (3.54)	9 (0.35)	160 (6.30)	85 (3.35)	170 (6.69)	M20
	L, M	NA						

IMPORTANT There are no flange options for MMA-B225*xxx* motors. The HDR dimension is the overall height of the radial blower.

Common Rotary Motor Specifications

These specifications are common to all Kinetix rotary motor families.

Environmental Specifications - Kinetix Rotary Motion

Attribute	Kinetix VPL and VPF	Kinetix VPC	Kinetix VPH	Kinetix VPS	Kinetix TLP	Kinetix MP	Kinetix RDB	Kinetix TL and TLY	Kinetix HPK	Kinetix MMA
Temperature, ambient	0...40 °C (32...104 °F)	-20...+40 °C (-4...+104 °F)		0...40 °C (32...104 °F)						-20...+40 °C (-4...+104 °F)
Temperature, storage	-30...+40 °C (-22...+104 °F)		-30...+70 °C (-22...+158 °F)		-10...+80 °C (+14...+176 °F)	-30...+70 °C (-22...+158 °F)				-20...+50 °C (-4...+122 °F)
Relative humidity (noncondensing)	5...90%		5...95%		20...90%	5...95%				5...90%
Shock [1]	20 g peak, 6 ms duration								–	–
Vibration [1]	2.5 g peak @ 30...2000 Hz								–	–

(1) Any shock and vibration application exceeding these specifications can result in premature motor failure. Repetitive acceleration is considered vibration, not intermittent shock.

Thermal Ratings - Kinetix Rotary Motion

To obtain the specified motor thermal rating do not mount the motor in an area with restricted airflow. Keep other heat producing devices away from the motor and mount the motor on a surface with heat dissipation equivalent to an aluminum heatsink attached as specified in the following table.

Heatsink Size mm (in.) / **Motor Cat. No.**	203 x 203 x 6.35 (8 x 8 x 0.25)	254 x 254 x 6.35 (10 x 10 x 0.25)	305 x 305 x 12.7 (12 x 12 x 0.50)	305 x 305 x 25.4 (12 x 12 x 1.0)	407 x 407 x 19.1 (16 x 16 x 0.75)	457 x 457 x 12.7 (18 x 18 x 0.50)	508 x 508 x 19.1 (20 x 20 x 0.75)	533 x 533 x 25.4 (21 x 21 x 1.0)
VPL-x063*xx*, VPF-x063*xx*, VPH-x063*xx*	X	–	–	–	–	–	–	–
VPL-x075*xx*, VPF-x075*xx*, VPH-x075*xx*	–	X	–	–	–	–	–	–
VPL-x100*xx*, VPL-x115*xx*, VPL-x130*xx*, VPL-B165*xx* VPF-x100*xx*, VPF-x115*xx*, VPF-x130*xx*, VPF-B165*xx* VPH-x100*xx*, VPH-x115*xx*, VPH-x130*xx*, VPH-B165*xx* VPS-B1304, VPS-B1653	–	–	X	–	–	–	–	–
VPC-B165*xx*	–	–	X	–	–	–	–	–
VPC-B215*xx*	–	–	–	X	–	–	–	–
VPC-B300*xx*	–	–	–	–	–	–	–	X
MPL-x15*xx*	X	–	–	–	–	–	–	–
MPL-x2*xx*	–	X	–	–	–	–	–	–
MPL-x3*xx*, MPL-x4*xx*, MPL-x45*xx*, MPL-x5*xx* MPM-*xxxx*, MPF-*xxxx*, MPS-*xxxx*, MDF-SB*xxxx*	–	–	X	–	–	–	–	–
MPL-B6*xx*	–	–	–	X	–	–	–	–
MPL-B8*xx*, MPL-B9*xx*	–	–	–	–	–	–	–	X
RDB-B215*x*	–	–	–	–	–	X	–	–
RDB-B290*x*	–	–	–	–	X	–	–	–
RDB-B410*x*	–	–	–	–	–	–	X	–
TL-A1*xx*, TLY-A1*xx*	X	–	–	–	–	–	–	–
TL-A2*xx*, TLY-A2*xx*	–	X	–	–	–	–	–	–
TL-A25*xx*, TLY-A25*xx*, TL-A3*xx*, TLY-A3*xx*	–	–	X	–	–	–	–	–

Kinetix TLP Servo Motor Thermal Ratings

Motor Cat. No.	Heatsink Size mm (in.)
TLP-A046-*xxx*	250 x 250 x 6 (9.8 x 9.8 x 0.24)
TLP-A/B070-*xxx*	
TLP-A/B090-*xxx*	
TLP-A100-*xxx*	

Motor Cat. No.	Heatsink Size mm (in.)
TLP-A/B115-*xxx*	300 x 300 x 12 (11.8 x 11.8 x 0.47)
TLP-A/B145-*xxx*	400 x 400 x 20 (15.7 x 15.7 x 0.79)
TLP-A/B200-*xxx*	550 x 550 x 30 (21.6 x 21.6 x 1.2)
TLP-A/B235-*xxx*	650 x 650 x 35 (25.6 x 25.6 x 1.4)

Environmental Ratings - Kinetix Rotary Motion

IP Rating (1)	Dust Protection	Liquid Protection	Rotary Motor	Description
IP30	Objects larger than 2.5 mm (0.098 in.)	No protection from liquids.	Kinetix TL and TLY TLP-A046, TLP-A/B070, TLP-A/B090, and TLP-A100	For on-motor cable connectors.
IP40	Objects larger than 1.0 mm (0.039 in.)		TLP-A046, TLP-A/B070, (2) TLP-A/B090, and TLP-A100 (2)	Without shaft seal (standard) and with the use of Rockwell Automation factory-delivered Kinetix 2090 cable connectors.
			TLP-A/B115, TLP-A/B145, TLP-A/B200, and TLP-A/B235	
IP50	Limited protection from dust (no harmful deposit).		• Kinetix VPL • Kinetix MPL, MPM	IP50 minimum, without shaft seal (standard).
IP54		Protected against sprays from all directions.	Kinetix HPK	With shaft seal (standard) and the use of Rockwell Automation factory-delivered Kinetix 2090 cable connectors.
			Kinetix MMA(3)	
			Kinetix TL and TLY (2)	Without shaft seal (standard) and with the use of Rockwell Automation factory-delivered Kinetix 2090 cable connectors.
				With optional shaft seal and the use of Rockwell Automation factory-delivered Kinetix 2090 cable connectors.
IP65	Total protection from dust.	Protected against low-pressure jets of water from all directions.	• Kinetix TLP • VPC-B*xxxxx*-Q	With shaft seal (standard) and the use of Rockwell Automation factory-delivered Kinetix 2090 single cable (Kinetix VPC) or cable connectors (Kinetix TLP).
			• VPC-B*xxxxx*-S, VPC-B*xxxxx*-Y, VPC-B3004*x*-M • Kinetix RDB (4)	With shaft seal (standard) and the use of Rockwell Automation factory-delivered Kinetix 2090 cable connectors.
IP66(5)		Protected against strong jets of water.	• Kinetix VPF • Kinetix MPF	With shaft seal (standard) and the use of Rockwell Automation factory-delivered Kinetix 2090 single cable (Kinetix VPF) or cable connectors (Kinetix MPF).
			• Kinetix VPL • Kinetix MPL, MPM	With optional shaft seal and the use of Rockwell Automation factory-delivered Kinetix 2090 single cable (Kinetix VPL) or cable connectors (Kinetix MPL, MPM).
			• Kinetix VPS (4) • Kinetix MPS (4)	With shaft seal and slinger (standard) and the use of Rockwell Automation factory-delivered Kinetix 2090 single cable (Kinetix VPS) or cable connectors (Kinetix MPS).
			Kinetix VPH (6)	With shaft seal (standard) and the use of Rockwell Automation factory-delivered Kinetix 2090 single cable (Kinetix VPH, VPF) or cable connectors (Kinetix MPF).
IP67(5)		Protected against the effects of temporary liquid immersion.	• Kinetix VPH (4), VPF • Kinetix MPF	
			• Kinetix VPL • Kinetix MPL, MPM	With optional shaft seal and the use of Rockwell Automation factory-delivered Kinetix 2090 single cable (Kinetix VPL) or cable connectors (Kinetix MPL, MPM).
			• Kinetix VPS (4) • Kinetix MPS (4)	With shaft seal and slinger (standard) and the use of Rockwell Automation factory-delivered Kinetix 2090 single cable (Kinetix VPS) or cable connectors (Kinetix MPS).
IP69K		Protected against the effects of water/stream jets up to 100 bar (1200 psi) with nozzle temperature at approximately 80 °C (176 °F).	Kinetix VPH (2)	For 1200 psi motor washdown with shaft seal (standard).
			• Kinetix VPS (2) • Kinetix MPS (2)	For 1200 psi motor washdown with shaft seal and slinger (standard).

(1) IP rating descriptions are for reference only. Refer to the international standards for more complete rating descriptions.
(2) Does not include on-motor cable connectors.
(3) IP55 available as an option, see Motor Catalog Number Explanation on page 178.
(4) Environmental rating applies from mounting face to rear of motor. Customer is responsible for providing environmental protection to mounting face of motor.
(5) The motors listed as IP66/IP67 rating means that they meet both of these ratings when a shaft seal is installed. This rating means they can both withstand 'IP66 strong jets of water' and 'IP67 temporary liquid immersion' simultaneously.
(6) Includes on-motor cable connectors.

Certifications - Kinetix Rotary Motion

Rotary Motor Family	cURus [1]	CE or UK [2]
Kinetix TL and TLY	–	X
Kinetix TLP	X	X
Kinetix MPL, MPM, MPF, MPS	X	X
Kinetix VPL, VPC, VPF, VPH, VPS	X	X
Kinetix HPK	X	X
Kinetix MMA	X	X
Kinetix RDB	X	X

(1) UL recognized components to applicable UL and CSA standards.
(2) When product is marked, see the Product Certifications website at rok.auto/certifications for Declarations of Conformity, certificates, and other certification details.

Motor Brake Application Guidelines

The brake option offered on these rotary motors are holding brakes designed to hold the motor shaft at 0 rpm up to the rated brake holding torque. The brakes release when voltage is applied to the brake coil. Voltage and polarity supplied to the brake must be as specified to be sure of proper brake performance. The Kinetix MMA main motor does have a hand release brake option.

The brakes are not designed for stopping the rotation of the motor shaft. Use drive inputs to stop motor shaft rotation. The recommended method to stop the motor shaft from rotating is to command the drive to decelerate the motor to 0 rpm and engage the holding brake only after the motor has decelerated to 0 rpm.

If system power fails, the brakes can withstand use as stopping brakes. However, use of the brakes as stopping brakes creates rotational mechanical backlash that can damage the system, increase brake pad wear, and reduce brake life. The brakes are not designed, nor are they intended, to be used as a safety device.

A separate power source is required to disengage the brake. This power source can be controlled by the motor controls, in addition to manual operator controls. Electrical arcing can occur at the relay contacts until the brake power dissipates. A customer supplied diode or metal oxide varistor (MOV) is recommended to prevent arcing. Use of an MOV can also reduce the time to mechanically engage the brake. For brake response time specifications, refer to the motor brake specification tables.

For more information on the use of holding brakes, see the Vertical Load and Holding Brake Management Application Technique, publication MOTION-AT003.

Suppression Device for Brake Relay Contacts

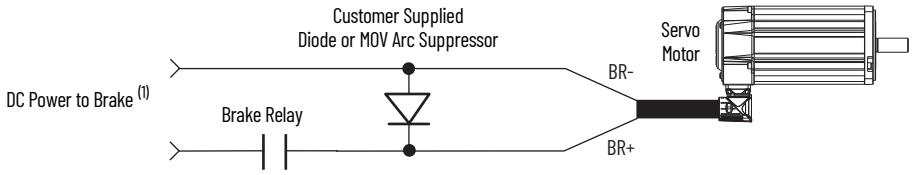

(1) Kinetix 2000, Kinetix 5500, Kinetix 5700, Kinetix 6000, Kinetix 6200, Kinetix 6500, and Kinetix 7000 servo drives provide motor brake relay outputs and supply an MOV arc suppressor. Customer supplied arc suppressor is not required unless the coil current of motor brake is greater than the maximum brake current rating of the drive relay output.

Additional Resources

These documents contain additional information concerning related products from Rockwell Automation. You can view or download publications at rok.auto/literature.

Resource	Description
Kinetix Linear Motion Specifications, publication KNX-TD002	Product specifications for Kinetix MPAS and MPMA linear stages, Kinetix MPAR and MPAI electric cylinders, and Kinetix LDC and LDL linear motors.
Kinetix 5700, 5500, 5300, 5100, and ArmorKinetix Servo Drives Specifications, publication KNX-TD003	Provides product specifications for Kinetix Integrated Motion over the EtherNet/IP™ network and EtherNet/IP networking servo drive families.
Kinetix Rotary and Linear Motion Cable Specifications, publication KNX-TD004	Product specifications for Kinetix 2090 motor and interface cables.
Kinetix 3, 300, 350, 2000, 6000, 6200, 6500, 7000 Servo Drives Specifications, publication KNX-TD005	Provides product specifications for Kinetix Integrated Motion over the EtherNet/IP network (Kinetix 6500 and Kinetix 350), Integrated Motion over Sercos interface (Kinetix 6200, Kinetix 6000, Kinetix 2000, and Kinetix 7000), and component (Kinetix 3) servo drive families.
Kinetix Motion Control Selection Guide, publication KNX-SG001	Provides an overview of Kinetix servo drives, motors, actuators, and motion accessories designed to help make initial decisions for the motion control products best suited for your system requirements.
Kinetix 5500 Drive Systems Design Guide, publication KNX-RM009	Provides information to determine and select the required (drive specific) drive module, power accessory, connector kit, motor cable, and interface cable catalog numbers for your drive and motor/actuator motion control system. Includes system performance specifications and torque/speed curves (rotary motion) and force/velocity curves (linear motion) for your motion application.
Kinetix 5700 Drive Systems Design Guide, publication KNX-RM010	
Kinetix 5100 Drive Systems Design Guide, publication KNX-RM011	
Kinetix 5300 Drive Systems Design Guide, publication KNX-RM012	
Kinetix 6000 and Kinetix 6200/6500 Drive Systems Design Guide, publication KNX-RM003	
Kinetix 300/350 Drive Systems Design Guide, publication KNX-RM004	
Kinetix 3 Drive Systems Design Guide, publication KNX-RM005	
Kinetix 2000 Drive Systems Design Guide, publication KNX-RM006	
Kinetix 7000 Drive Systems Design Guide, publication KNX-RM007	
Vertical Load and Holding Brake Management Application Technique, publication MOTION-AT003	Provides information on vertical loads and how the servo motor holding-brake option can be used to help keep a load from falling.
Motor Nameplate Datasheet Entry for Custom Motor Applications Application Technique, publication 2198-AT002	Provides information on the use of nameplate data entry for custom induction motors and permanent-magnet motors that are used in applications with Kinetix 5700 servo drives.
Kinetix 6200 and Kinetix 6500 Safe Speed Monitoring Servo Drives Safety Reference Manual, publication 2094-RM001	Provides information on wiring, configuring, and troubleshooting the safe-speed features of your Kinetix 6200 and Kinetix 6500 drives.
Kinetix 6200 and Kinetix 6500 Safe Torque-off Servo Drives Safety Reference Manual, publication 2094-RM002	Provides information on wiring, configuring, and troubleshooting the safe torque-off features of your Kinetix 6200 and Kinetix 6500 drives.
Kinetix Safe-off Feature Safety Reference Manual, publication GMC-RM002	Provides information on wiring and troubleshooting your Kinetix 6000 and Kinetix 7000 servo drives with the safe-off feature.
System Design for Control of Electrical Noise Reference Manual, publication GMC-RM001	Provides information, examples, and techniques designed to minimize system failures caused by electrical noise.
ControlLogix Selection Guide, publication 1756-SG001	Provides information to determine which ControlLogix® controller fits your application and the product specifications to help design a ControlLogix system and select the appropriate components.
CompactLogix Selection Guide, publication 1769-SG001	Provides information to determine which CompactLogix™ controller fits your application and the product specifications to help design a CompactLogix system and select the appropriate components.
Kinetix Halogen-free PUR and PVC Single Motor Cables Quick Reference, publication 2090-QR002	Provides product specifications comparing 2090-CSBM1*xx*-*xx*LF*xx* (Halogen-free PUR) and 2090-CSxM1*xx*-*xx*VA*xx* (PVC) single motor cables.
Industrial Ethernet Media Brochure, publication 1585-BR001	Provides information to determine which Bulletin 1585 Ethernet cable fits your application and the product specifications to help select the appropriate components.
FactoryTalk Motion Analyzer System Sizing and Selection Tool website rok.auto/motion-analyzer	Provides comprehensive motion application sizing tool used for analysis, optimization, selection, and validation of your Kinetix Motion Control system.
Rockwell Automation Product Selection rok.auto/systemtools	Provides online product selection and system configuration tools, including AutoCAD (DXF) drawings.
Ethernet Reference Manual, ENET-RM002	Describes basic Ethernet concepts, infrastructure components, and infrastructure features.
Safety Guidelines for the Application, Installation, and Maintenance of Solid-state Control, publication SGI-1.1	Designed to harmonize with NEMA Standards Publication No. ICS 1.1-1987 and provides general guidelines for the application, installation, and maintenance of solid-state control in the form of individual devices or packaged assemblies incorporating solid-state components.
Product Certifications website, rok.auto/certifications.	Provides declarations of conformity, certificates, and other certification details.

Rockwell Automation Support

Use these resources to access support information.

Technical Support Center	Find help with how-to videos, FAQs, chat, user forums, Knowledgebase, and product notification updates.	rok.auto/support
Local Technical Support Phone Numbers	Locate the telephone number for your country.	rok.auto/phonesupport
Technical Documentation Center	Quickly access and download technical specifications, installation instructions, and user manuals.	rok.auto/techdocs
Literature Library	Find installation instructions, manuals, brochures, and technical data publications.	rok.auto/literature
Product Compatibility and Download Center (PCDC)	Download firmware, associated files (such as AOP, EDS, and DTM), and access product release notes.	rok.auto/pcdc

Documentation Feedback

Your comments help us serve your documentation needs better. If you have any suggestions on how to improve our content, complete the form at rok.auto/docfeedback.

Allen-Bradley, ArmorKinetix, CompactLogix, ControlLogix, expanding human possibility, Kinetix, Logix 5000, PowerFlex, Rockwell Automation, and Studio 5000 Logix Designer are trademarks of Rockwell Automation, Inc.

EtherNet/IP is a trademark of ODVA, Inc.

Trademarks not belonging to Rockwell Automation are property of their respective companies.

Rockwell Automation maintains current product environmental compliance information on its website at rok.auto/pec.

Rockwell Otomasyon Ticaret A.Ş. Kar Plaza İş Merkezi E Blok Kat:6 34752, İçerenköy, İstanbul, Tel: +90 (216) 5698400 EEE Yönetmeliğine Uygundur

Connect with us.

rockwellautomation.com — expanding **human possibility**®

AMERICAS: Rockwell Automation, 1201 South Second Street, Milwaukee, WI 53204-2496 USA, Tel: (1) 414.382.2000
EUROPE/MIDDLE EAST/AFRICA: Rockwell Automation NV, Pegasus Park, De Kleetlaan 12a, 1831 Diegem, Belgium, Tel: (32) 2663 0600
ASIA PACIFIC: Rockwell Automation SEA Pte Ltd, 2 Corporation Road, #04-05, Main Lobby, Corporation Place, Singapore 618494, Tel: (65) 6510 6608
UNITED KINGDOM: Rockwell Automation Ltd., Pitfield, Kiln Farm, Milton Keynes, MK11 3DR, United Kingdom, Tel: (44)(1908) 838-800

Publication KNX-TD001J-EN-P - August 2024
Supersedes Publication KNX-TD001I-EN-P - June 2023

Copyright © 2024 Rockwell Automation, Inc. All rights reserved. Printed in the U.S.A.