Intrinsic Safety Modules

Bulletin Numbers 937TS, 937TH, 937CS, 937CU, 937ZH, 937A

Allen-Bradley
by ROCKWELL AUTOMATION

Selection Guide

Original Instructions

Allen Bradley 937TS-AITXP-DC2 | gesrepair.com

What's Inside

	Topic	Page
	Isolated Barriers	3
	Converter Barriers	43
	Zener Barriers	63
	Accessories	74

Isolated Barriers

With galvanic optical or transformer isolation, these modules provide an interface within the intrinsic safety circuit that is electrically separated from the control system. A key advantage of isolated barriers is that they do not require a ground between the module and the intrinsically safe device. Available in 12.5 mm (0.5 in) and 20 mm (0.8 in) widths.

Switch Amplifiers
Switch Amplifiers are used to transfer digital signals (NAMUR sensors/mechanical contacts) from a hazardous area to a safe area. Select modules are available with relay output or transistor output, in addition to signal splitters. A unique collective error messaging feature is available when used with the Power Rail system. Due to its compact housing design and low heat dissipation, this device is useful for detecting positions, end stops, and switching states in space-critical applications.

SMART Transmitter Power Supplies
SMART Transmitter Power Supplies supply 2-wire SMART transmitters in a hazardous area, and can also be used with 2-wire SMART current sources. They transfer the analog input signal to the safe area as an isolated current value. Modules with splitter feature provide two isolated output signals.

Temperature Repeaters
Temperature Repeaters transfer RTD resistance values from hazardous areas to safe areas. A 2-, 3-, or 4-wire mode is available depending on the required accuracy. The monitor registers the same load as if it were connected directly to the resistance in a hazardous area.

SMART Current Drivers
SMART Current Drivers drive SMART IP converters, electrical valves, and positioners in hazardous areas.

Solenoid Drivers
Solenoid Drivers supply power to solenoids, light-emittininlocated in a hazardous area.

Catalog Number Explanation

Note: Examples that are given in this section are for reference purposes. This basic explanation should not be used for product selection; some combinations may not produce a valid catalog number.

937T	H	-	DI	SAR	-	KD	1
	a		b	c	-	d	e

a

Module Profile	
Code	**Description**
H	High-density 12.5 mm module
S	Standard 20 mm module

b

I/O Type	
Code	**Description**
DI	Digital In
DO	Digital Out
AI	Analog In
AO	Analog Out

c

Functionality	
Code	**Description**
SAR	Switch Amplifier with Relay Output
SRS	Switch Amplifier with Relay Output, Splitter
SAT	Switch Amplifier with Transistor Output
STS	Switch Amplifier with Transistor Output, Splitter
SND	Solenoid Driver
TXP	SMART Transmitter, Power Supply
TXS	SMART Transmitter, Power Supply, Splitter
RRP	Repeater, Resistance Measuring
SCD	SMART Current Driver

d

Power	
Code	**Description**
IP	Input Loop Powered
DC	24V DC
BC	20...90V DC / 48...253V AC
KD	115V AC
KF	230V AC

e

Channels	
Code	**Description**
1	Single Channel
2	Dual Channel

Switch Amplifier, Relay Output

2-ch, 115V AC

937TS-DISAR-KD2

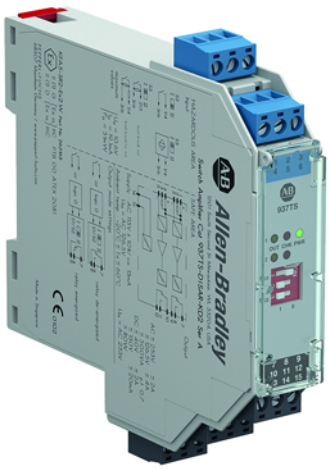

- 2-channel isolated barrier
- 115V AC supply
- Dry contact or NAMUR inputs
- Relay contact output
- Line fault detection (LFD)
- Reversible mode of operation
- Up to SIL 2 according to IEC 61508 / IEC 61511

This isolated barrier is used for intrinsic safety applications. It transfers digital signals (NAMUR sensors/mechanical contacts) from a hazardous area to a safe area. The proximity sensor or switch controls a form C changeover relay contact for the safe area load. The normal output state can be reversed using switches S1 and S2. Switch S3 is used to enable or disable line fault detection of the field circuit. During an error condition, the relays revert to their de-energized state and the light-emitting diode (LEDs) indicate the fault according to NAMUR NE44.

Description	115V AC, 2-channel
Signal type	Digital input, relay output
Supply	
Connection	terminals 14, 15
Rated voltage	103.5...126V AC , 45...65 Hz
Power loss	1.2 W
Power consumption	≤1.3 W
Input	
Connection	terminals 1+, 2+, 3-; 4+, 5+, 6-
Rated values	according to EN 60947-5-6 (NAMUR)
Open circuit voltage / short-circuit current	approx. 8V DC / approx. 8 mA
Switching point / switching hysteresis	1.2...2.1 mA / approx. 0.2 mA
Line fault detection	breakage I ≤0.1 mA, short-circuit I >6 mA
Pulse / pause ratio	≥20 ms / ≥20 ms
Output	
Connection	output I: terminals 7, 8, 9; output II: terminals 10, 11, 12
Output I	signal; relay
Output II	signal; relay
Energized / de-energized delay	approx. 20 ms / 20 ms
Electrical life	See Maximum Switching Power of Output Contacts on page 7
Transfer characteristics	
Switching frequency	≤10 Hz
Electrical isolation	
Input / output	reinforced insulation according to IEC/ EN 61010-1, rated insulation voltage $300V_{eff}$
Input / power supply	
Output / power supply	
Output / output	
Directive conformity	
Electromagnetic compatibility	
Directive 2004 / 108 / EC	EN 61326-1:2006
Low voltage	
Directive 2006 / 95 / EC	EN 61010-1:2010
Conformity	
Electromagnetic compatibility	NE 21:2006
Protection degree	IEC 60529:2001
Input	EN 60947-5-6:2000

937TS-DISAR-KD2

Environmental and Mechanical Specifications	
Operating temperature	-20...+60 °C (-4...+140 °F)
Protection degree	IP20
Weight	approx. 150 g (0.33 lb)
Dimensions	20 x 119 x 115 mm (0.8 x 4.7 x 4.5 in)
Mounting	on 35 mm DIN mounting rail according to EN 60715:2001
Data for application in connection with Ex-areas	
Group, category, type of protection	Ex II (1) G [Ex ia] IIC, II (1) D [Ex ia] IIIC
Input	[Ex ia] IIC, [Ex ia] IIIC
Voltage U_0	10.6V
Current I_0	19.1 mA
Power P_0	51 mW (linear characteristic)
Supply	
Maximum safe voltage U_m	126.5V AC
Output	
Contact loading	253V AC / 2 A / cos φ>0.7; 126.5V AC / 4 A / cos φ >0.7; 40V DC / 2 A resistive load
Maximum safe voltage U_m	253V AC
Electrical isolation	
Input / output	safe electrical isolation according to IEC/EN 60079-11, voltage peak value 375V
Input / power supply	
Directive conformity	
Directive 94 / 9 / EC	EN 60079-0:2009, EN 60079-11:2007, EN 61241-11:2006

Note: Maximum safe voltage is not rated voltage.

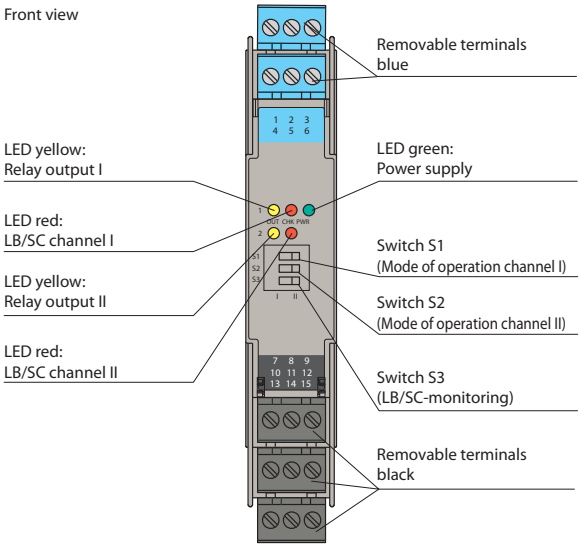

Product Features

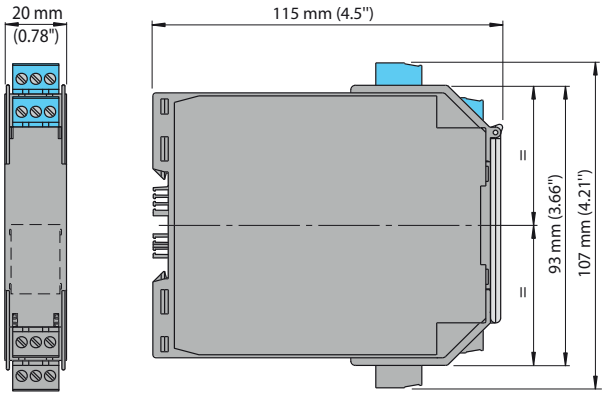

Approximate Dimensions

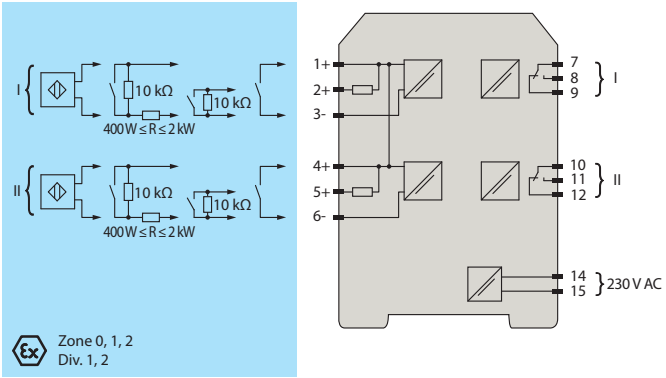

Wiring Diagram

937TS-DISAR-KD2

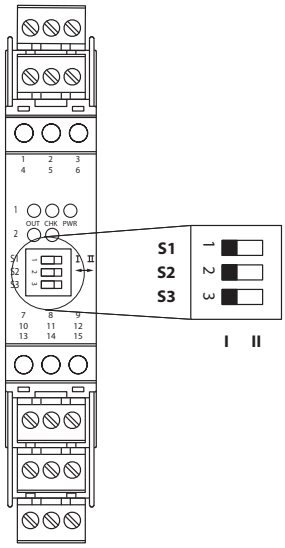

Switch position

S	Function		Position
1	Mode of operation Output I (relay) energized	with high input current	I
		with low input current	II
2	Mode of operation Output II (relay) energized	with high input current	I
		with low input current	II
3	Line fault detection	ON	I
		OFF	II

Operating status

Control circuit	Input signal
Initiator high impedance / contact opened	low input current
Initiator low impedance / contact closed	high input current
Lead breakage lead short-circuit	Line fault

Factory settings: switch 1, 2 and 3 in position I

Configuration

Maximum Switching Power of Output Contacts

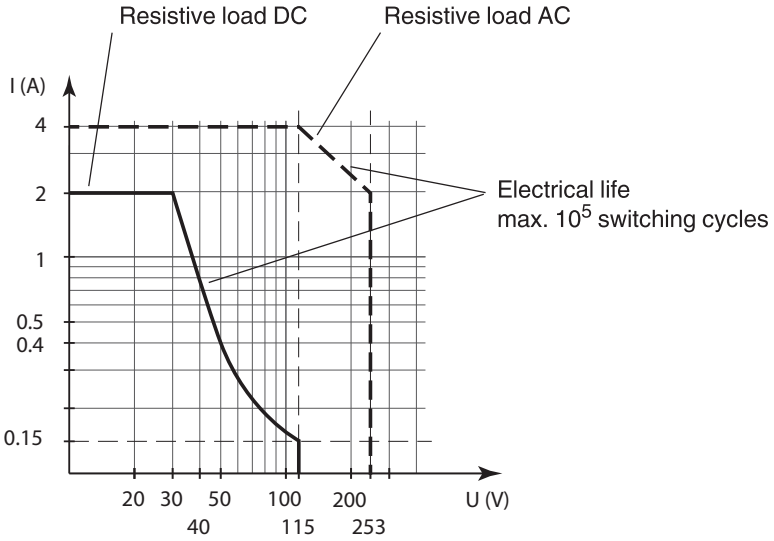

The maximum number of switching cycles is depending on the electrical load and may be higher when reduced currents and voltages are applied

IMPORTANT Mechanical life: 10^7 switching cycles. For applications that require higher switching cycles consider the switch amplifier product with transistor output.

Switch Amplifier, Relay Output

2-ch, 230V AC

937TS-DISAR-KF2

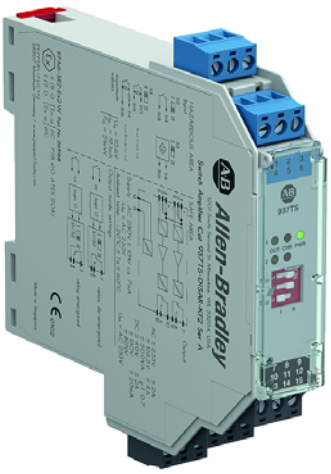

- 2-channel isolated barrier
- 230V AC supply
- Dry contact or NAMUR inputs
- Relay contact output
- Line fault detection (LFD)
- Reversible mode of operation
- Up to SIL 2 according to IEC 61508 / IEC 61511

This isolated barrier is used for intrinsic safety applications. It transfers digital signals (NAMUR sensors/mechanical contacts) from a hazardous area to a safe area. The proximity sensor or switch controls a form C changeover relay contact for the safe area load. The normal output state can be reversed using switches S1 and S2. Switch S3 is used to enable or disable line fault detection of the field circuit. During an error condition, the relays revert to their de-energized state and the light-emitting diode (LEDs) indicate the fault according to NAMUR NE44.

Description	230V AC, 2-channel
Signal type	Digital input, relay output
Supply	
Connection	terminals 14, 15
Rated voltage	207...253V AC, 45...65 Hz
Power loss	1.2 W
Power consumption	≤1.3 W
Input	
Connection	terminals 1+, 2+, 3-; 4+, 5+, 6-
Rated values	according to EN 60947-5-6 (NAMUR)
Open circuit voltage / short-circuit current	approx. 8V DC / approx. 8 mA
Switching point / switching hysteresis	1.2...2.1 mA / approx. 0.2 mA
Line fault detection	breakage I ≤0.1 mA, short-circuit I >6 mA
Pulse / pause ratio	≥20 ms / ≥20 ms
Output	
Connection	output I: terminals 7, 8, 9; output II: terminals 10, 11, 12
Output I	signal; relay
Output II	signal; relay
Energized / de-energized delay	approx. 20 ms / 20 ms
Electrical life	See Maximum Switching Power of Output Contacts on page 10
Transfer characteristics	
Switching frequency	≤10 Hz
Electrical isolation	
Input / output	reinforced insulation according to IEC/ EN 61010-1, rated insulation voltage $300V_{eff}$
Input / power supply	
Output / power supply	
Output / output	
Directive conformity	
Electromagnetic compatibility	
Directive 2004 / 108 / EC	EN 61326-1:2006
Low voltage	
Directive 2006 / 95 / EC	EN 61010-1:2010
Conformity	
Electromagnetic compatibility	NE 21:2006
Protection degree	IEC 60529:2001
Input	EN 60947-5-6:2000

937TS-DISAR-KF2

Environmental and Mechanical Specifications	
Operating temperature	-20...+60 °C (-4...+140 °F)
Protection degree	IP20
Weight	approx. 150 g (0.33 lb)
Dimensions	20 x 119 x 115 mm (0.8 x 4.7 x 4.5 in)
Mounting	on 35 mm DIN mounting rail according to EN 60715:2001
Data for application in connection with Ex-areas	
Group, category, type of protection	<Ex> II (1) G [Ex ia] IIC, II (1) D [Ex ia] IIIC
Input	[Ex ia] IIC, [Ex ia] IIIC
Voltage U_0	10.6V
Current I_0	19.1 mA
Power P_0	51 mW (linear characteristic)
Supply	
Maximum safe voltage U_m	253V AC
Output	
Contact loading	253V AC / 2 A / cos φ>0.7; 126.5V AC / 4 A / cos φ >0.7; 40V DC / 2 A resistive load
Maximum safe voltage U_m	253V AC
Electrical isolation	
Input / output	safe electrical isolation according to IEC/EN 60079-11, voltage peak value 375V
Input / power supply	
Directive conformity	
Directive 94 / 9 / EC	EN 60079-0:2009, EN 60079-11:2007, EN 61241-11:2006

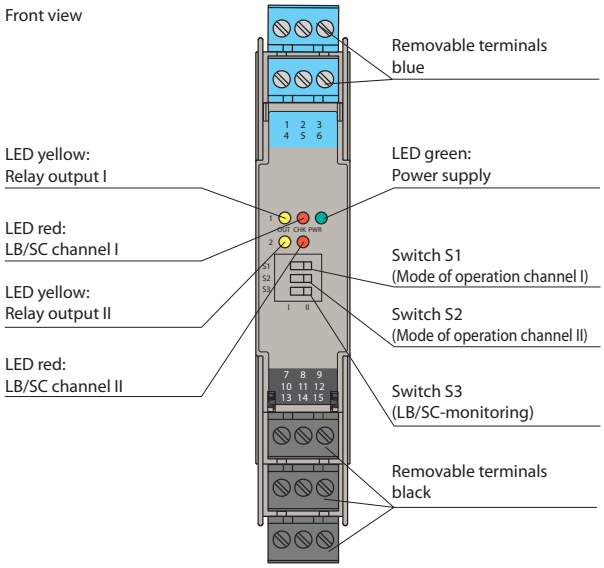

Product Features

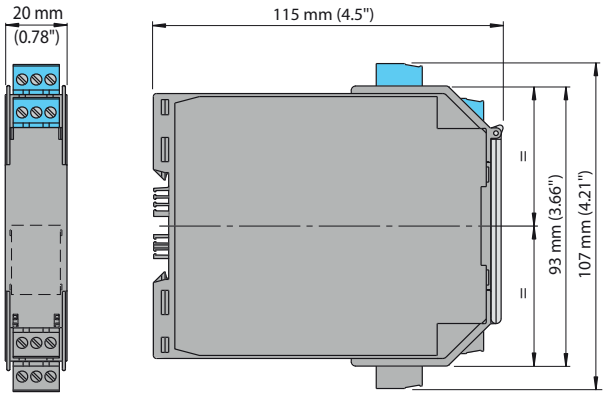

Approximate Dimensions

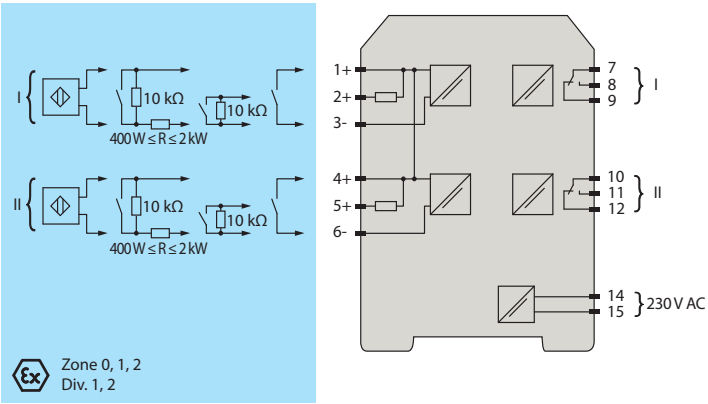

Wiring Diagram

937TS-DISAR-KF2

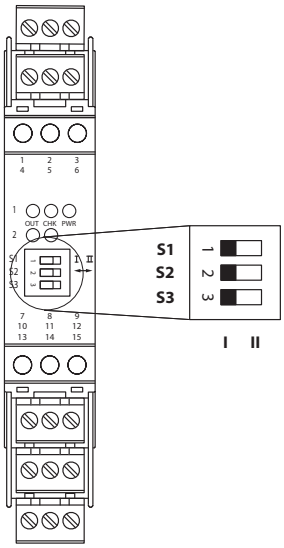

Switch position

S	Function		Position
1	Mode of operation Output I (relay) energized	with high input current	I
		with low input current	II
2	Mode of operation Output II (relay) energize	with high input current	I
		with low input current	II
3	Line fault detection	ON	I
		OFF	II

Operating status

Control circuit	Input signal
Initiator high impedance / contact opened	low input current
Initiator low impedance / contact closed	high input current
Lead breakage lead short-circuit	Line fault

Factory settings: switch 1, 2 and 3 in position I

Configuration

Maximum Switching Power of Output Contacts

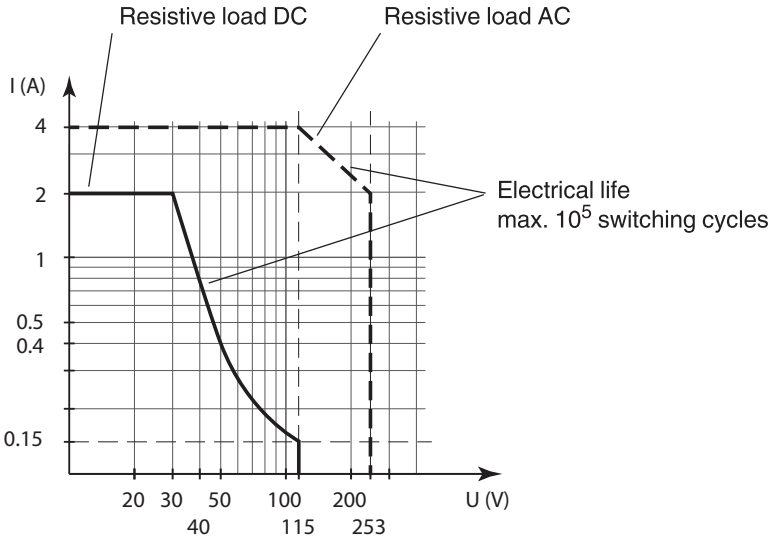

The maximum number of switching cycles is depending on the electrical load and may be higher when reduced currents and voltages are applied

IMPORTANT Mechanical life: 10^7 switching cycles. For applications that require higher switching cycles consider the switch amplifier product with transistor output.

Switch Amplifier, Relay Output

2-ch, 24V DC

937TH-DISAR-DC2

- 2-channel isolated barrier
- 24V DC supply (Power Rail)
- Dry contact or NAMUR inputs
- Relay contact output
- Line fault detection (LFD)
- Housing width 12.5 mm
- Up to SIL 2 according to IEC 61508

This isolated barrier is used for intrinsic safety applications. It transfers digital signals (NAMUR
sensors / mechanical contacts) from a hazardous area to a safe area. The proximity sensor or switch controls a form A normally open relay contact for the safe area load. The normal output state can be reversed using switches S1 and S2. Switch S3 is used to enable or disable line fault detection of the field circuit. During an error condition, relays revert to their de-energized state and light-emitting diodes (LEDs) indicate the fault according to NAMUR NE44.
A unique collective error messaging feature is available when used with the Power Rail system. Due to its compact housing design and low heat dissipation, this device is useful for detecting positions, end stops, and switching states in space-critical applications.

Description	24V, 2-channel
Signal type	Digital input
Supply	
Connection	Power Rail or terminals 9+, 10-
Rated voltage	19...30V DC
Ripple	≤10%
Rated current	≤30 mA
Power loss	≤600 mW
Power consumption	≤600 mW
Input	
Connection	terminals 1+, 2-; 3+, 4-
Rated values	according to EN 60947-5-6 (NAMUR)
Open circuit voltage / short-circuit current	approx. 10V DC / approx. 8 mA
Switching point / switching hysteresis	1.2...2.1 mA / approx. 0.2 mA
Line fault detection	breakage I ≤0.1 mA, short-circuit I >6.5 mA
Pulse / pause ratio	≥20 ms / ≥20 ms
Output	
Connection	terminals 5, 6; 7, 8
Output I	signal; relay
Output II	signal; relay
Minimum switch current	2 mA / 24V DC
Energized / de-energized delay	≥20 ms / ≥20 ms
Electrical life	See Maximum Switching Power of Output Contacts on page 13
Transfer characteristics	
Switching frequency	≤10 Hz
Electrical isolation	
Input / output	reinforced insulation according to EN 50178, rated insulation voltage $300V_{eff}$
Input / power supply	
Output / power supply	
Input / input	basic insulation according to EN 50178, rated insulation voltage $300V_{eff}$
Output / output	reinforced insulation according to EN 50178, rated insulation voltage $300V_{eff}$
Directive conformity	
Electromagnetic compatibility	
Directive 2004 / 108 / EC	EN 61326-1:2006
Low voltage	
Directive 2006 / 95 / EC	EN 61010-1:2010
Conformity	
Electromagnetic compatibility	NE 21
Protection degree	IEC 60529

937TH-DISAR-DC2

Environmental and Mechanical Specifications	
Operating temperature	-20...+60 °C (-4...+140 °F)
Protection degree	IP20
Weight	approx. 100 g (0.22 lb)
Dimensions	12.5 x 114 x 119 mm (0.5 x 4.5 x 4.7 in)
Mounting	on 35 mm DIN mounting rail according to EN 60715:2001
Data for application in connection with Ex-areas	
Group, category, type of protection	<Ex> II (1)G [Ex ia Ga] IIC, <Ex> II (1)D [Ex ia Da] IIIC, <Ex> I (M1) [Ex ia Ma] I
Input	[Ex ia Ga] IIC, [Ex ia Da] IIIC, [Ex ia Ma] I
Voltage U_0	10.5V
Current I_0	17.1 mA
Power P_0	45 mW (linear characteristic)
Supply	
Maximum safe voltage U_m	253V AC
Output	
Contact loading	253V AC / 2 A / cos φ >0.7; 126.5V AC / 4 A / cos φ >0.7; 30V DC / 2 A resistive load
Maximum safe voltage U_m	253V AC
Group, category, type of protection, temperature class	Ex II 3G Ex nA nC IIC T4 Gc
Output I, II	
Contact loading	50V AC / 2 A / cos φ >0.7; 30V DC / 2 A resistive load
Electrical isolation	
Input / output	safe electrical isolation according to IEC/EN 60079-11, voltage peak value 375V
Input / power supply	
Directive conformity	
Directive 94 / 9 / EC	EN 60079-0:2009, EN 60079-11:2007, EN 60079-15:2005, EN 61241-11:2006

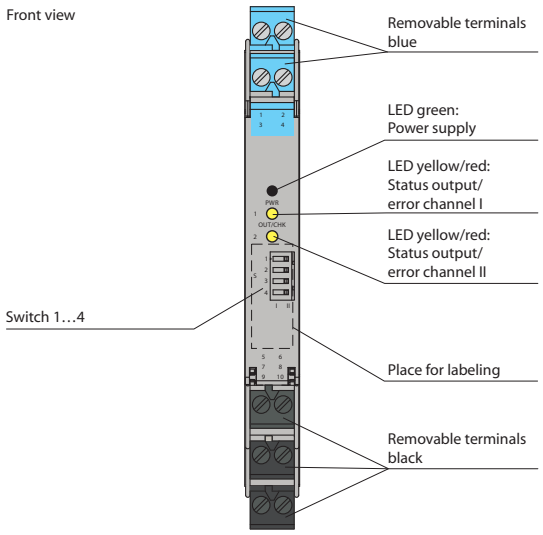

Product Features

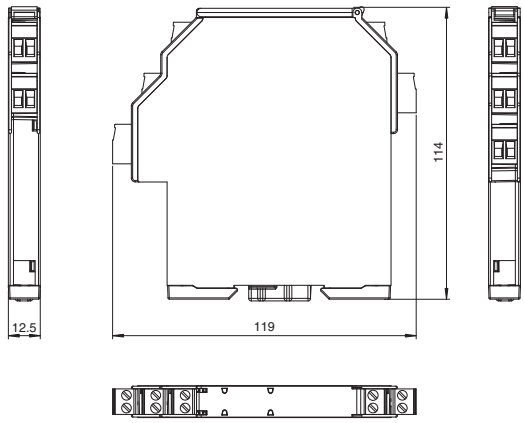

Approximate Dimensions

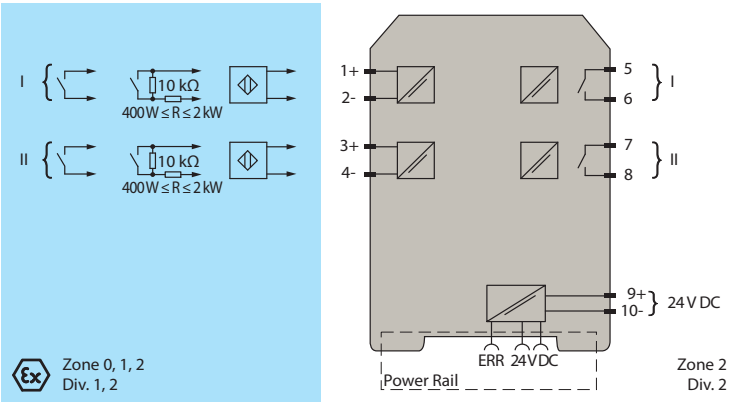

Wiring Diagram

937TH-DISAR-DC2

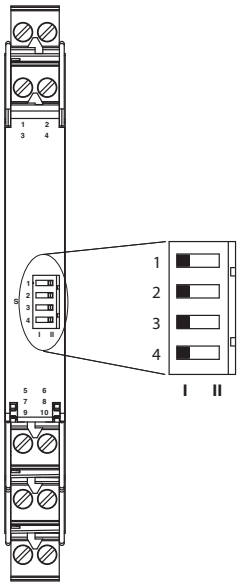

Switch position

S	Function		Position
1	Mode of operation Output I (relay) energized	with high input current	I
		with low input current	II
2	Mode of operation Output II (relay) energized	with high input current	I
		with low input current	II
3	Line fault detection Input I	ON	I
		OFF	II
4	Line fault detection Input II	ON	I
		OFF	II

Operating status

Control circuit	Input signal
Initiator high impedance / contact opened	low input current
Initiator low impedance / contact closed	high input current
Lead breakage, lead short-circuit	Line fault

Factory settings: switch 1, 2, 3 and 4 in position I

Configuration

Maximum Switching Power of Output Contacts

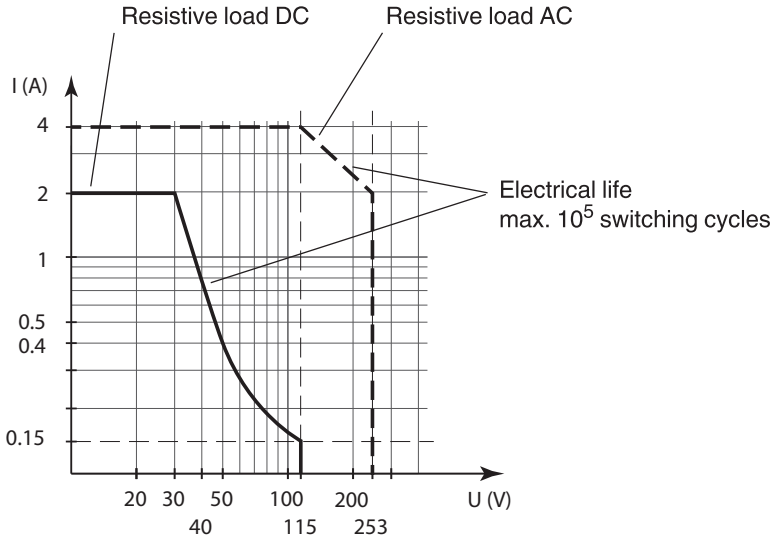

The maximum number of switching cycles is depending on the electrical load and may be higher when reduced currents and voltages are applied

IMPORTANT Mechanical life: 10^7 switching cycles. For applications that require higher switching cycles consider the switch amplifier product with transistor output.

Switch Amplifier, Relay Output with Splitter

1-ch, 115V AC

937TS-DISRS-KD1

- 1-channel isolated barrier
- 115V AC supply
- Dry contact or NAMUR inputs
- Relay contact output
- Fault relay contact output
- Line fault detection (LFD)
- Reversible mode of operation
- Up to SIL 2 according to IEC 61508 / IEC 61511

This isolated barrier is used for intrinsic safety applications. It transfers digital signals (NAMUR sensors/mechanical contacts) from a hazardous area to a safe area. The proximity sensor or switch controls a form C changeover relay contact for the safe area load. The normal output state can be reversed using switch S1. Switch S2 allows output II to be switched between a signal output or an error message output. Switch S3 is used to enable or disable line fault detection of the field circuit. During an error condition, the relays revert to their de-energized state and the light-emitting diode (LEDs) indicate the fault according to NAMUR NE44.

Description	115V AC, 1-channel with Splitter
Signal type	Digital input, relay output
Supply	
Connection	terminals 14, 15
Rated voltage	103.5...126V AC , 45...65 Hz
Power loss	1.2 W
Power consumption	≤1.3 W
Input	
Connection	terminals 1+, 2+, 3-
Rated values	according to EN 60947-5-6 (NAMUR)
Open circuit voltage / short-circuit current	approx. 8V DC / approx. 8 mA
Switching point / switching hysteresis	1.2...2.1 mA / approx. 0.2 mA
Line fault detection	breakage I ≤0.1 mA, short-circuit I >6 mA
Pulse / pause ratio	≥20 ms / ≥20 ms
Output	
Connection	output I: terminals 7, 8, 9; output II: terminals 10, 11, 12
Output I	signal; relay
Output II	signal or error message; relay
Energized / de-energized delay	approx. 20 ms / 20 ms
Electrical life	See Maximum Switching Power of Output Contacts on page 16
Transfer characteristics	
Switching frequency	≤10 Hz
Electrical isolation	
Input / output	reinforced insulation according to IEC/ EN 61010-1, rated insulation voltage $300V_{eff}$
Input / power supply	
Output / power supply	
Output / output	
Directive conformity	
Electromagnetic compatibility	
Directive 2004 / 108 / EC	EN 61326-1:2006
Low voltage	
Directive 2006 / 95 / EC	EN 61010-1:2010
Conformity	
Electromagnetic compatibility	NE 21:2006
Protection degree	IEC 60529:2001
Input	EN 60947-5-6:2000
Environmental and Mechanical Specifications	
Operating temperature	-20...+60 °C (-4...+140 °F)
Protection degree	IP20
Weight	approx. 150 g (0.33 lb)
Dimensions	20 x 119 x 115 mm (0.8 x 4.7 x 4.5 in)
Mounting	on 35 mm DIN mounting rail according to EN 60715:2001

937TS-DISRS-KD1

Data for application in connection with Ex-areas	
Group, category, type of protection	Ex II (1) G [Ex ia] IIC, II (1) D [Ex ia] IIIC
Input	[Ex ia] IIC, [Ex ia] IIIC
Voltage U_0	10.6V
Current I_0	19.1 mA
Power P_0	51 mW (linear characteristic)
Supply	
Maximum safe voltage U_m	126.5V AC
Output	
Contact loading	253V AC / 2 A / cos φ >0.7; 126.5V AC / 4 A / cos φ >0.7; 40V DC / 2 A resistive load
Maximum safe voltage U_m	253V AC
Electrical isolation	
Input / output	safe electrical isolation according to IEC/EN 60079-11, voltage peak value 375V
Input / power supply	

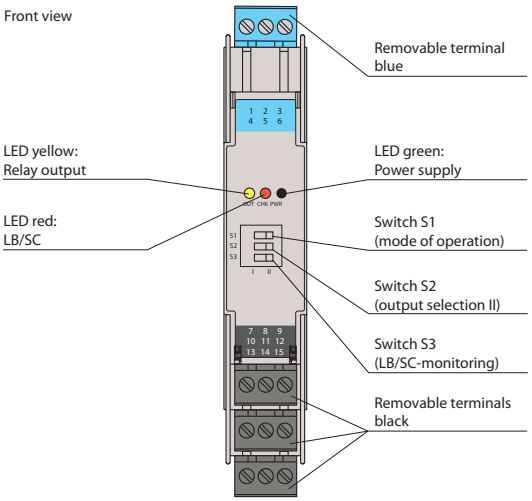

Product Features

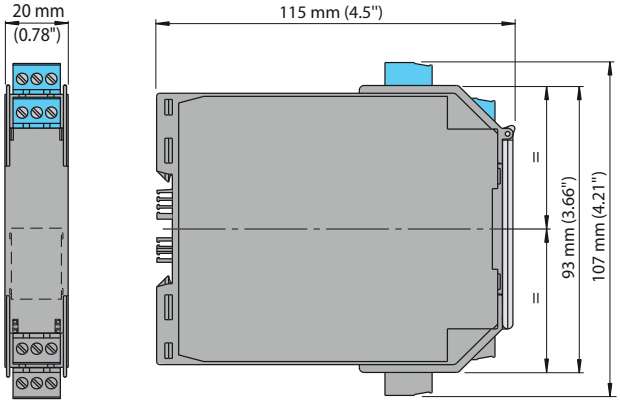

Approximate Dimensions

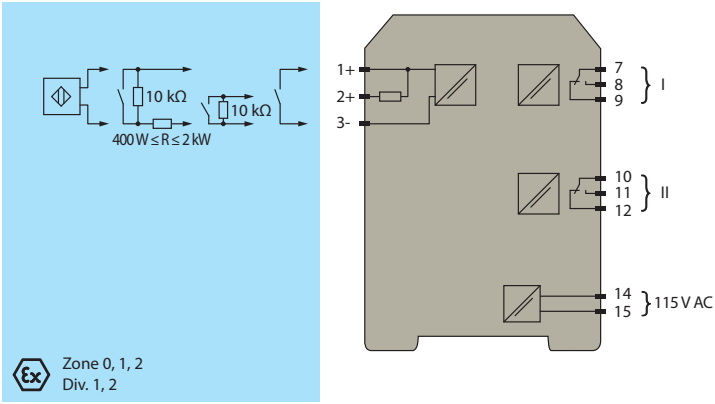

Wiring Diagram

Maximum Switching Power of Output Contacts

937TS-DISRS-KD1

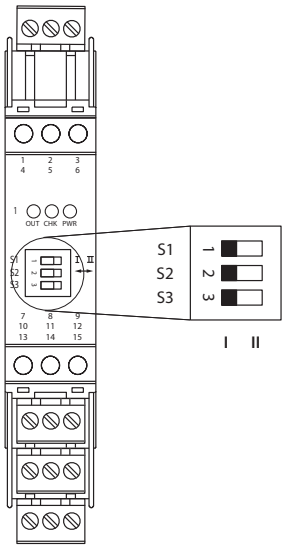

Switch position

S	Function		Position
1	Mode of operation Output I (relay) energized	with high input current	I
		with low input current	II
2	Assignment Output II (relay)	switching state like output I	I
		fault signal output (de-energized if fault)	II
3	Line fault detection	ON	I
		OFF	II

Operating status

Control circuit	Input signal
Initiator high impedance / contact opened	low input current
Initiator low impedance / contact closed	high input current
Lead breakage, lead short-circuit	Line fault

Factory settings: switch 1, 2 and 3 in position I

Configuration

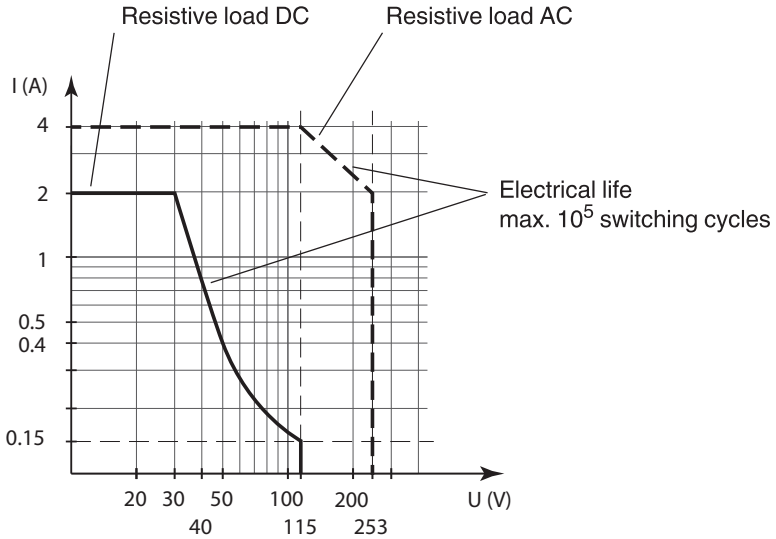

The maximum number of switching cycles is depending on the electrical load and may be higher when reduced currents and voltages are applied

IMPORTANT Mechanical life: 10^7 switching cycles. For applications that require higher switching cycles consider the switch amplifier product with transistor output.

Switch Amplifier, Relay Output with Splitter

1-ch, 230V AC

937TS-DISRS-KF1

- 1-channel isolated barrier
- 230V AC supply
- Digital input, relay output

This isolated barrier is used for intrinsic safety applications. It transfers digital signals (NAMUR sensors/mechanical contacts) from a hazardous area to a safe area. The proximity sensor or switch controls a form C changeover relay contact for the safe area load. The normal output state can be reversed using switch S1. Switch S2 allows output II to be switched between a signal output or an error message output. Switch S3 is used to enable or disable line fault detection of the field circuit. During an error condition, the relays revert to their de-energized state and the light-emitting diodes indicate the fault according to NAMUR NE44.

Description	230V AC, 1-channel with Splitter
Signal type	Digital input, relay output
Supply	
Connection	terminals 14, 15
Rated voltage	207...253V AC , 45...65 Hz
Power loss	1.2 W
Power consumption	≤1.3 W
Input	
Connection	terminals 1+, 2+, 3-
Rated values	according to EN 60947-5-6 (NAMUR)
Open circuit voltage / short-circuit current	approx. 8V DC / approx. 8 mA
Switching point / switching hysteresis	1.2...2.1 mA / approx. 0.2 mA
Line fault detection	breakage I ≤0.1 mA, short-circuit I >6 mA
Pulse / pause ratio	≥20 ms / ≥20 ms
Output	
Connection	output I: terminals 7, 8, 9; output II: terminals 10, 11, 12
Output I	signal; relay
Output II	signal or error message; relay
Energized / de-energized delay	approx. 20 ms / 20 ms
Electrical life	See Maximum Switching Power of Output Contacts on page 19
Transfer characteristics	
Switching frequency	≤10 Hz
Electrical isolation	
Input / output	reinforced insulation according to IEC/EN 61010-1, rated insulation voltage $300V_{eff}$
Input / power supply	
Output / power supply	
Output / output	
Directive conformity	
Electromagnetic compatibility	
Directive 2004 / 108 / EC	EN 61326-1:2006
Low voltage	
Directive 2006 / 95 / EC	EN 61010-1:2010
Conformity	
Electromagnetic compatibility	NE 21:2006
Protection degree	IEC 60529:2001
Input	EN 60947-5-6:2000

937TS-DISRS-KF1

Environmental and Mechanical Specifications	
Operating temperature	-20...+60 °C (-4...+140 °F)
Protection degree	IP20
Weight	approx. 150 g (0.33 lb)
Dimensions	20 x 119 x 115 mm (0.8 x 4.7 x 4.5 in)
Mounting	on 35 mm DIN mounting rail according to EN 60715:2001
Data for application in connection with Ex-areas	
Group, category, type of protection	Ex II (1) G [Ex ia] IIC, II (1) D [Ex ia] IIIC
Input	[Ex ia] IIC, [Ex ia] IIIC
Voltage U_0	10.6V
Current I_0	19.1 mA
Power P_0	51 mW (linear characteristic)
Supply	
Maximum safe voltage U_m	253V AC
Output	
Contact loading	253V AC / 2 A / cos φ>0.7; 126.5V AC / 4 A / cos φ >0.7; 40V DC / 2 A resistive load
Maximum safe voltage U_m	253V AC
Electrical isolation	
Input / output	safe electrical isolation according to IEC/EN 60079-11, voltage peak value 375V
Input / power supply	
Directive conformity	
Directive 94 / 9 / EC	EN 60079-0:2009, EN 60079-11:2007, EN 61241-11:2006

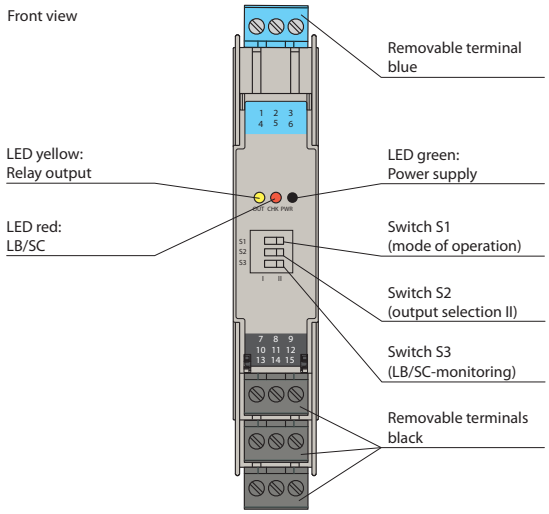

Product Features

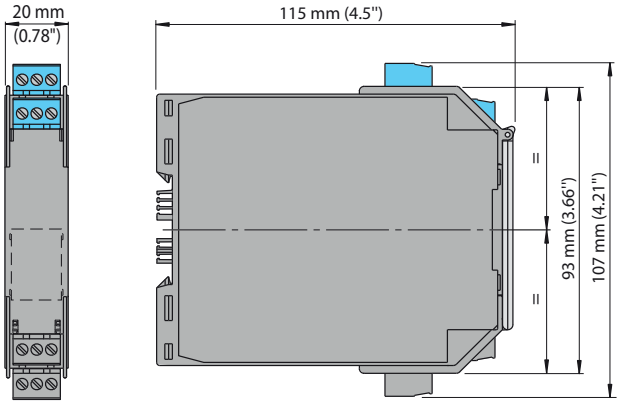

Approximate Dimensions

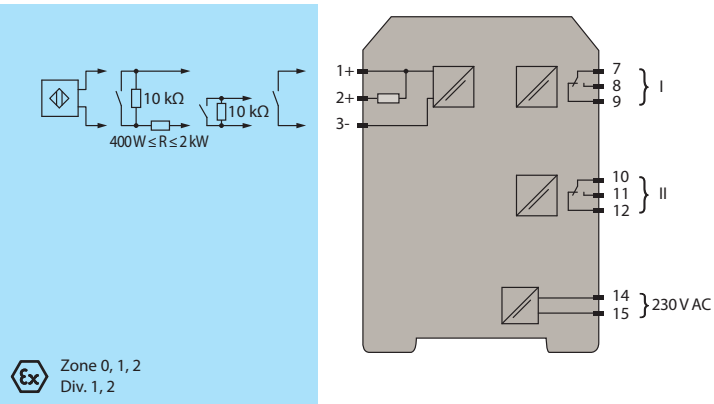

Wiring Diagram

937TS-DISRS-KF1

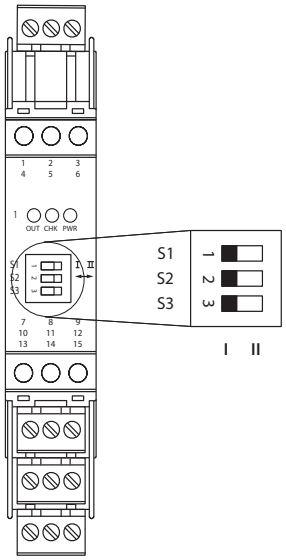

Switch position

S	Function		Position
1	Mode of operation Output I (relay) energized	with high input current	I
		with low input current	II
2	Assignment Output II (relay)	switching state like output I	I
		fault signal output (de-energized if fault)	II
3	Line fault detection	ON	I
		OFF	II

Operating status

Control circuit	Input signal
Initiator high impedance / contact opened	low input current
Initiator low impedance / contact closed	high input current
Lead breakage, lead short-circuit	Line fault

Factory settings: switch 1, 2 and 3 in position I

Configuration

Maximum Switching Power of Output Contacts

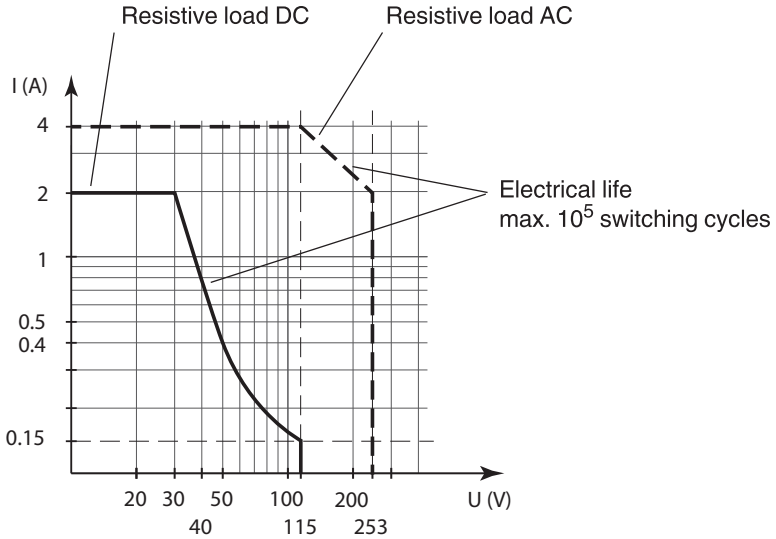

The maximum number of switching cycles is depending on the electrical load and may be higher when reduced currents and voltages are applied

IMPORTANT Mechanical life: 10^7 switching cycles. For applications that require higher switching cycles consider the switch amplifier product with transistor output.

Switch Amplifier, Relay Output with Splitter

1-ch, 24V DC

937TH-DISRS-DC1

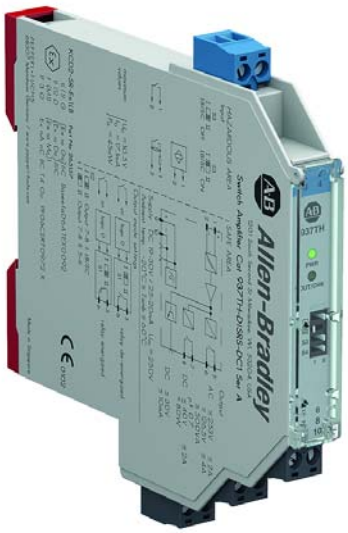

- 1-channel isolated barrier
- 24V DC supply (Power Rail)
- Dry contact or NAMUR inputs
- Relay contact output
- Fault relay contact output
- Housing width 12.5 mm (0.5 in)
- Up to SIL 2 according to IEC 61508

This isolated barrier is used for intrinsic safety applications. It transfers digital signals (NAMUR sensors/mechanical contacts) from a hazardous area to a safe area. The proximity sensor or switch controls a form A normally open relay contact for the safe area load. The normal output state can be reversed using switch S1. Switch S2 allows output II to be switched between a signal output and an error message output. Switch S3 enables or disables line fault detection of the field circuit.

During an error condition, relays revert to their de-energized state and light-emitting diodes indicate the fault according to NAMUR NE44. A unique collective error messaging feature is available when used with the Power Rail system.

Due to its compact housing design and low heat dissipation, this device is useful for detecting positions, end stops, and switching states in space-critical applications.

Description	24V DC, 1-channel with Splitter
Signal type	Digital input, relay output
Supply	
Connection	Power Rail or terminals 9+, 10-
Rated voltage	19...30V DC
Ripple	≤10%
Rated current	≤30 mA
Power loss	≤500 mW
Power consumption	≤500 mW
Input	
Connection	terminals 1+, 2-
Rated values	according to EN 60947-5-6 (NAMUR)
Open circuit voltage / short-circuit current	approx. 8V DC / approx. 8 mA
Switching point / switching hysteresis	1.2...2.1 mA / approx. 0.2 mA
Line fault detection	breakage I ≤0.1 mA, short-circuit I >6.5 mA
Pulse / pause ratio	≥20 ms / ≥20 ms
Output	
Connection	output I: terminals 5, 6; output II: terminals 7, 8
Output I	signal; relay
Output II	signal or error message; relay
Minimum switch current	2 mA / 24V DC
Energized / de-energized delay	≤20 ms / ≤20 ms
Electrical life	See Maximum Switching Power of Output Contacts on page 22
Transfer characteristics	
Switching frequency	≤10 Hz
Electrical isolation	
Input / output	reinforced insulation according to IEC/EN 61010-1, rated insulation voltage $300V_{eff}$
Input / power supply	
Output / power supply	
Output / output	
Directive conformity	
Electromagnetic compatibility	
Directive 2004 / 108 / EC	EN 61326-1:2006
Low voltage	
Directive 2006 / 95 / EC	EN 61010-1:2010
Conformity	
Electromagnetic compatibility	NE 21
Protection degree	IEC 60529

937TH-DISRS-DC1

Environmental and Mechanical Specifications	
Operating temperature	-20...+60 °C (-4...+140 °F)
Protection degree	IP20
Weight	approx. 100 g (0.22 lb)
Dimensions	12.5 x 114 x 119 mm (0.5 x 4.5 x 4.7 in)
Mounting	on 35 mm DIN mounting rail according to EN 60715:2001
Data for application in connection with Ex-areas	
Group, category, type of protection	Ex II (1)G [Ex ia Ga] IIC , Ex II (1)D [Ex ia Da] IIIC < Ex> I (M1) [Ex ia Ma] I
Input	[Ex ia Ga] IIC, [Ex ia Da] IIIC, [Ex ia Ma] I
Voltage U_0	10.5V
Current I_0	17.1 mA
Power P_0	45 mW (linear characteristic)
Supply	
Maximum safe voltage U_m	253V AC
Output I, II	
Maximum safe voltage U_m	253V AC
Contact loading	253V AC/2 A/cos φ >0.7; 126.5V AC/4 A/cos φ >0.7; 30V DC/2 A resistive load
Group, category, type of protection, temperature class	Ex II 3G Ex nA nC IIC T4 Gc
Output I, II	
Contact loading	50V AC/2 A/cos φ >0.7; 30V DC/2 A resistive load
Electrical isolation	
Input / output	safe electrical isolation according to IEC/EN 60079-11, voltage peak value 375V
Input / power supply	
Directive conformity	
Directive 94 / 9 / EC	EN 60079-0:2009, EN 60079-11:2007, EN 60079-15:2005, EN 61241-11:2006

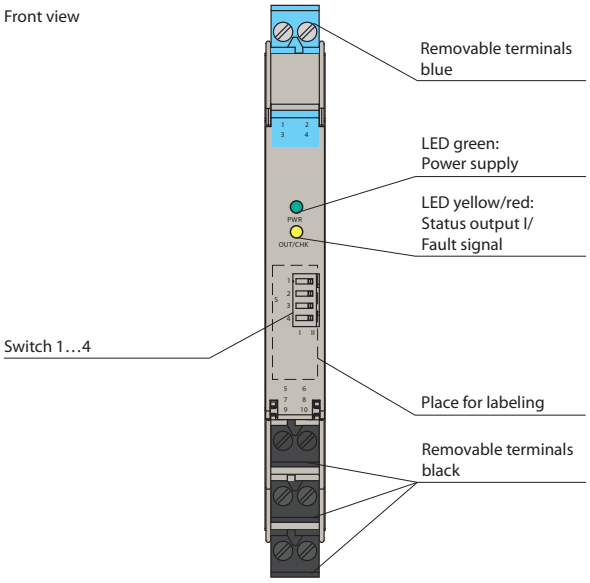

Product Features

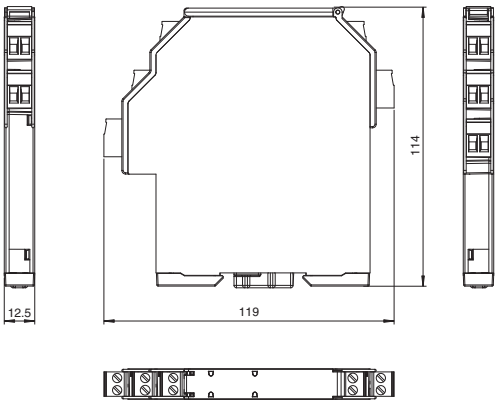

Approximate Dimensions

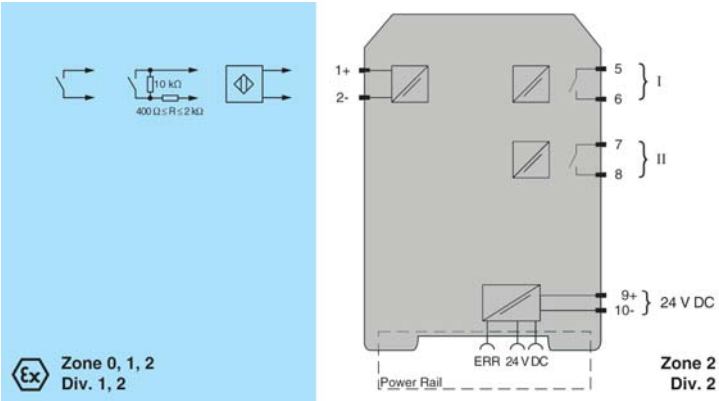

Wiring Diagram

937TH-DISRS-DC1

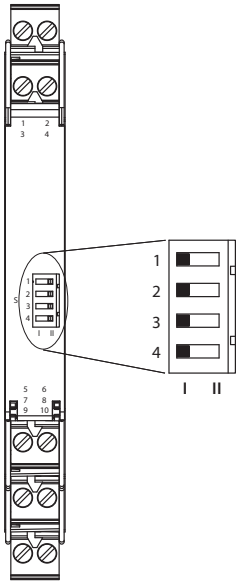

Switch position

S	Function		Position
1	Mode of operation Output I (relay) energized	with high input current	I
		with low input current	II
2	Assignment Output II (relay)	switching state like relay I	I
		fault signal output (de-energized if fault)	II
3	Line fault detection	ON	I
		OFF	II
4	no function		

Operating status

Control circuit	Input signal
Initiator high impedance / contact opened	low input current
Initiator low impedance / contact closed	high input current
Lead breakage, lead short-circuit	Line fault

Factory settings: switch 1, 2, 3 and 4 in position I

Configuration

Maximum Switching Power of Output Contacts

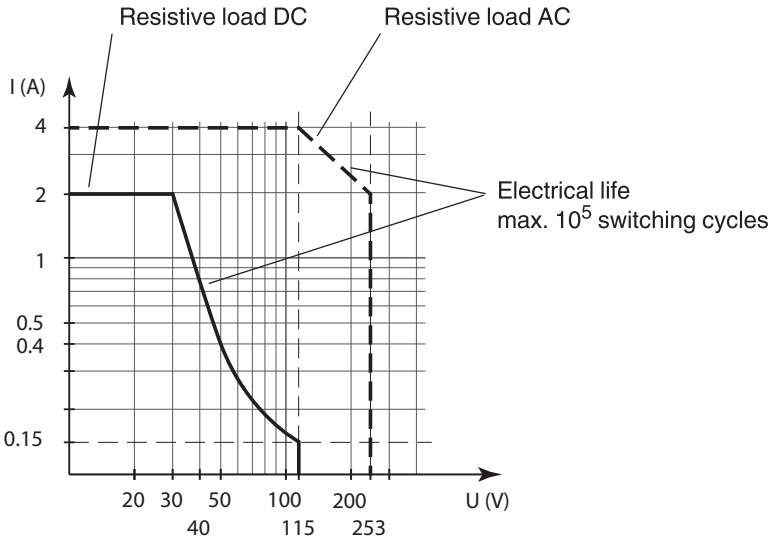

The maximum number of switching cycles is depending on the electrical load and may be higher when reduced currents and voltages are applied

IMPORTANT Mechanical life: 10^7 switching cycles. For applications that require higher switching cycles consider the switch amplifier product with transistor output.

Switch Amplifier, Transistor Output

2-ch, 24V DC

937TH-DISAT-DC2

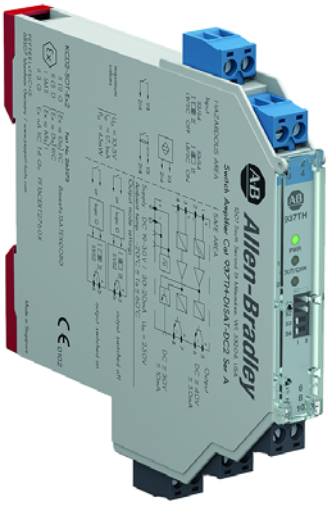

- 2-channel isolated barrier
- 24V DC supply (Power Rail)
- Housing width 12.5 mm (0.5 in)
- Up to SIL 2 according to IEC 61508

This isolated barrier is used for intrinsic safety applications. The device transfers digital signals (NAMUR sensors or dry contacts) from a hazardous area to a safe area. Each input controls a passive transistor output. Via switches the mode of operation can be reversed and the line fault detection can be switched off. A fault is signalized by light-emitting diodes according to NAMUR NE44 and a separate collective error message output.

Description	24V DC, 2-channel
Signal type	Digital input, transistor output
Supply	
Connection	Power Rail or terminals 9+, 10-
Rated voltage	19...30V DC
Ripple	≤10%
Rated current	30...20 mA
Power loss	≤800 mW including maximum power dissipation in the output
Input	
Connection	terminals 1+, 2-; 3+, 4-
Rated values	according to EN 60947-5-6 (NAMUR)
Open circuit voltage / short-circuit current	approx.10V DC / approx. 8 mA
Switching point / switching hysteresis	1.2...2.1 mA / approx. 0.2 mA
Line fault detection	breakage I ≤0.1 mA, short-circuit I >6.5 mA
Pulse / pause ratio	≥20 ms / ≥20 ms
Output	
Connection	terminals 5, 6; 7, 8
Rated voltage	30V DC
Rated current	50 mA
Response time	≤200 µs
Signal level 1	(external voltage) -3V max for 50 mA
Signal level 0	blocked output (off-state current ≤10 µA)
Output I	signal; transistor
Output II	signal; transistor
Minimum switch current	2 mA / 24V DC
Energized / de-energized delay	≤20 ms / ≤20 ms
Transfer characteristics	
Switching frequency	≤5 kHz
Electrical isolation	
Input / output	reinforced insulation according to EN 50178, rated insulation voltage 300$V_{e?}$
Input / power supply	
Output / power supply	reinforced insulation according to EN 50178, rated insulation voltage 50V_{eff}
Output / output	
Directive conformity	
Electromagnetic compatibility	Directive 2004 / 108 / EC
Conformity	
Electromagnetic compatibility	NE 21:2011
Protection degree	IEC 60529:2001
Protection against electrical shock	IEC 61010:2010
Input	EN 60947-5-6:2000

937TH-DISAT-DC2

Environmental and Mechanical Specifications	
Operating temperature	-20...+60 °C (-4...+140 °F)
Protection degree	IP20
Weight	approx. 100 g (0.22 lb)
Dimensions	12.5 x 114 x 119 mm (0.5 x 4.5 x 4.7 in)
Mounting	on 35 mm DIN mounting rail according to EN 60715:2001
Data for application in connection with Ex-areas	
Group, category, type of protection	Ex II (1)G [Ex ia Ga] IIC
	Ex II (1)D [Ex ia Da] IIIC
	Ex I (M1) [Ex ia Ma] I
Input Ex ia	
Voltage U_0	10.5V
Current I_0	17.1 mA
Power P_0	45 mW (linear characteristic)
Supply	
Maximum safe voltage U_m	253V AC
Output	
Maximum safe voltage U_m	253V AC
Group, category, type of protection, temperature class	Ex II 3G Ex nA IIC T4 Gc
Electrical isolation	
Input / output	safe electrical isolation according to IEC/EN 60079-11, voltage peak value 375V
Input / power supply	
Directive conformity	Directive 94 / 9 / EC

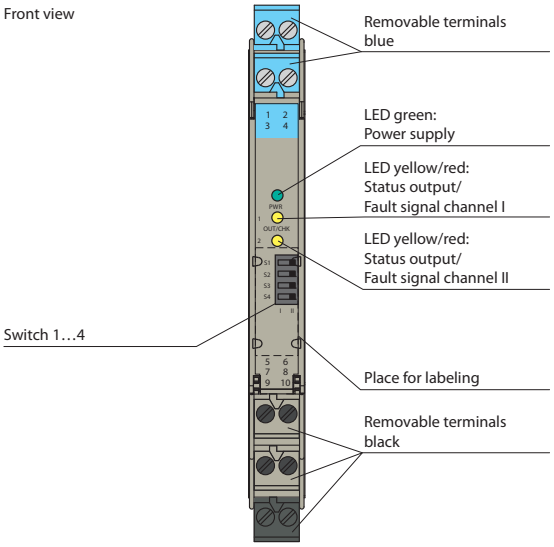

Product Features

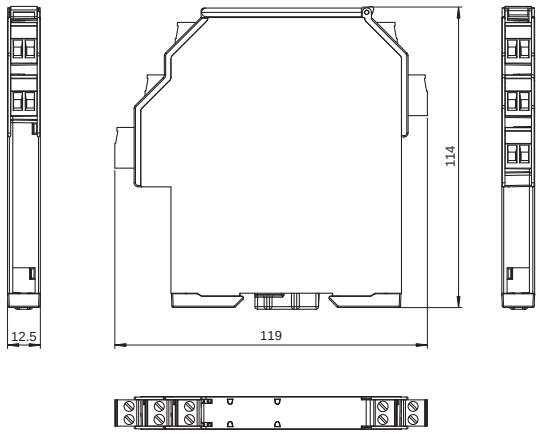

Approximate Dimensions

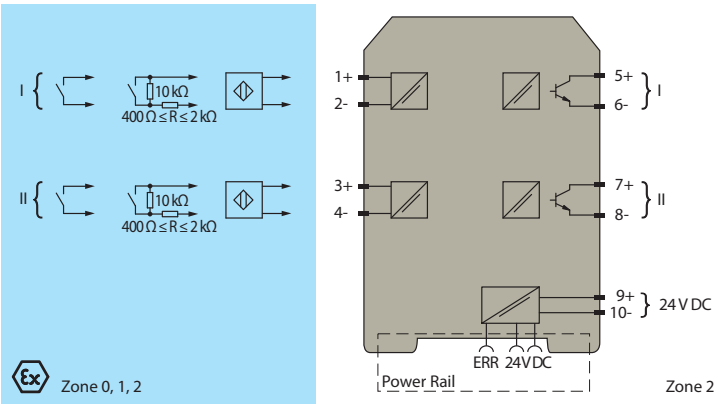

Wiring Diagram

937TH-DISAT-DC2

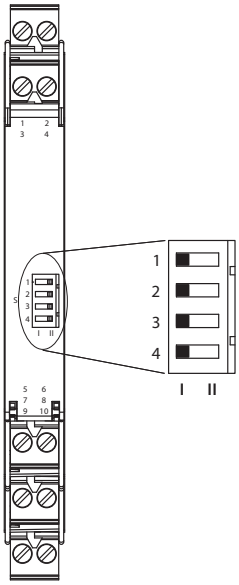

Switch position

S	Function		Position
1	Mode of operation Output I (relay) energized	with high input current	I
		with low input current	II
2	Mode of operation Output II (relay) energized	with high input current	I
		with low input current	II
3	Line fault detection Input I	ON	I
		OFF	II
4	Line fault detection Input II	ON	I
		OFF	II

Operating status

Control circuit	Input signal
Initiator high impedance / contact opened	low input current
Initiator low impedance / contact closed	high input current
Lead breakage, lead short-circuit	Line fault

Factory settings: switch 1, 2, 3 and 4 in position I

Configuration

Switch Amplifier, Transistor Output with Splitter

1-ch, 24V DC

937TH-DISTS-DC1

- 1-channel isolated barrier
- 24V DC supply (Power Rail)
- Housing width 12.5 mm (0.5 in)
- Up to SIL 2 according to IEC 61508

This isolated barrier is used for intrinsic safety applications. The device transfers digital signals (NAMUR sensors or dry contacts) from a hazardous area to a safe area. The input controls two passive transistor outputs. Via switches the mode of operation can be reversed and the line fault detection can be switched off. Via switch the function of the second output can be defined as a signal output or an error output. A fault is signalized by light-emitting diodes according to NAMUR NE44 and a separate collective error message output.

Description	24V, 1-channel with splitter
Signal type	Digital input, transistor output
Supply	
Connection	Power Rail or terminals 9+, 10-
Rated voltage	19...30V DC
Ripple	≤10%
Rated current	20...15 mA
Power loss	≤700 mW including maximum power dissipation in the output
Input	
Connection	terminals 1+, 2-
Rated values	according to EN 60947-5-6 (NAMUR)
Open circuit voltage / short-circuit current	approx.10V DC / approx. 8 mA
Switching point / switching hysteresis	1.2...2.1 mA / approx. 0.2 mA
Line fault detection	breakage I ≤0.1 mA, short-circuit I >6.5 mA
Pulse / pause ratio	≥100 µs / ≥100 µs
Output	
Connection	output I: terminals 5, 6; output II: terminals 7, 8
Rated voltage U_n	30V DC
Rated current I_n	50 mA
Response time	≤200 µs
Signal level 1	(external voltage) -3V max for 50 mA
Signal level 0	blocked output (off-state current ≤10 µA)
Output I	transistor
Output II	signal or error message; transistor
Collective Error Message	Power Rail
Transfer characteristics	
Switching frequency	≤5 kHz
Electrical isolation	
Input / output	reinforced insulation according to EN 50178, rated insulation voltage $300V_{eff}$
Input / power supply	
Output / power supply	basic insulation according to EN 50178, rated insulation voltage $50V_{eff}$
Output / output	
Directive conformity	
Electromagnetic compatibility	Directive 2004 / 108 / EC
Conformity	
Electromagnetic compatibility	NE 21:2011
Protection degree	IEC 60529:2001
Protection against electrical shock	IEC 61010:2010
Input	EN 60947-5-6:2000

937TH-DISTS-DC1

Environmental and Mechanical Specifications	
Operating temperature	-20...+60 °C (-4...+140 °F)
Protection degree	IP20
Weight	approx. 100 g (0.22 lb)
Dimensions	12.5 x 114 x 119 mm (0.5 x 4.5 x 4.7 in)
Mounting	on 35 mm DIN mounting rail according to EN 60715:2001
Data for application in connection with Ex-areas	
Input	
Voltage U_0	10.5V
Current I_0	17.1 mA
Power P_0	45 mW (linear characteristic)
Supply	
Maximum safe voltage U_m	253V AC
Output	
Maximum safe voltage U_m	253V AC
Group, category, type of protection, temperature class	Ex II 3G Ex nA IIC T4 Gc
Electrical isolation	
Input / output	safe electrical isolation according to IEC/EN 60079-11, voltage peak value 375V
Input / power supply	
Directive conformity	
Directive 94 / 9 / EC	EN 60079-0:2012, EN 60079-11:2012, EN 60079-15:2010

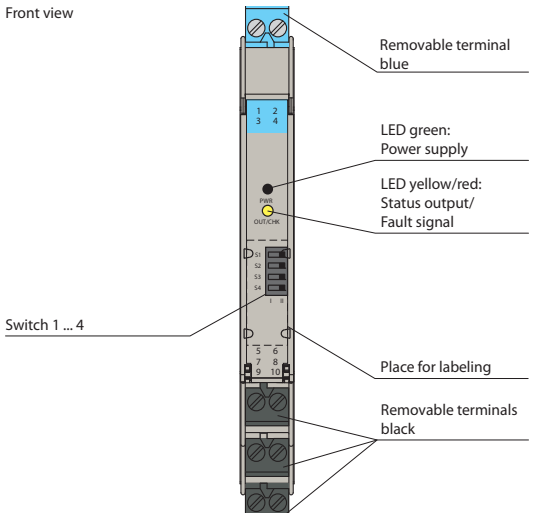

Product Features

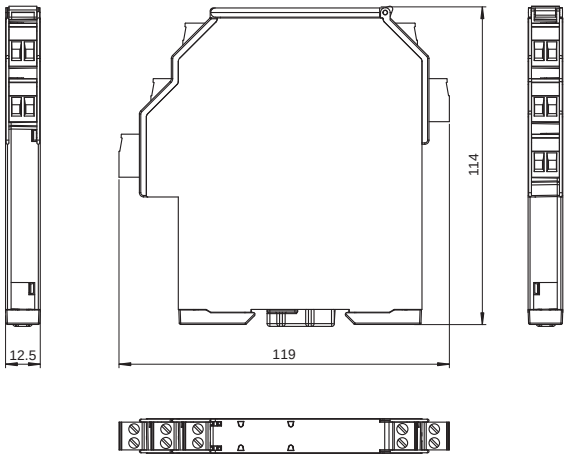

Approximate Dimensions

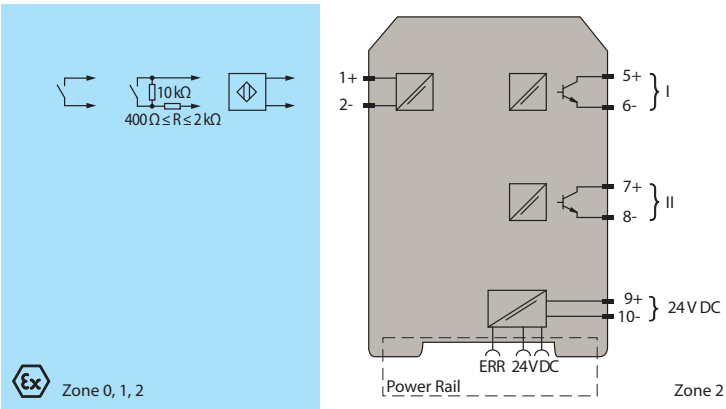

Wiring Diagram

937TH-DISTS-DC1

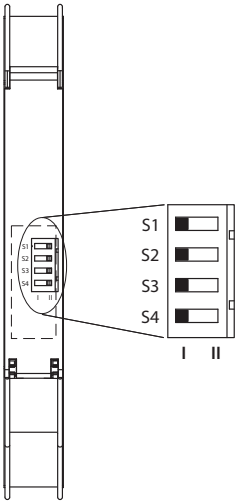

Switch settings

S	Function		Position
1	Mode of operation output I (active)	with high input current	I
		with low input current	II
2	Assignment output II	switching state like output I	I
		fault signal output (passive if fault)	II
3	Line fault detection of the input	ON	I
		OFF	II
4	no function		

Operating status

Control circuit	Input signal
Initiator high impedance / contact opened	low input current
Initiator low impedance / contact closed	high input current
Lead breakage, lead short-circuit	Line fault

Factory settings: switch 1, 2, 3 and 4 in position I

Configuration

Solenoid Driver

1-ch, 24V DC

937TH-DOSND-IP1

- 1-channel isolated barrier
- 24V DC supply (loop powered)
- Current limit 45 mA at 12V DC
- Housing width 12.5 mm (0.5 in)
- Up to SIL 3 according to IEC 61508

This isolated barrier is used for intrinsic safety applications. It supplies power to solenoids, light-emitting diodes, and audible alarms in a hazardous area. It is loop powered, so the available energy at the output is received from the input signal. The output signal has a resistive characteristic. As a result the output voltage and current are dependent on the load and the input voltage. At full load, 12V at 45 mA is available for the hazardous area application.

Description	24V DC, 1-channel
Signal type	Digital output
Supply	
Connection	loop powered
Power loss	1 W
Input	
Connection	terminals 5, 6
Rated values U_i	19...30V DC
Current	≤72 mA at U_i = 19V, ≤50 mA at U_i = 30V with 265 W output load
	≤45 mA at U_i = 19V, ≤31 mA at U_i = 30V with shorted output
	≤14 mA at U_i = 19V, ≤11 mA at U_i = 30V no load at output
Inrush current	≤200 mA after 100 µs
Output	
Connection	terminals 1+, 2-
Internal resistor R_i	≤238 Ω
Current I_e	≤45 mA
Voltage U_e	≥12V
Open loop voltage U_s	≥22.7V
Output rated operating current	45 mA
Output signal	These values are valid for the rated operating voltage 19...30V DC
Energized / de-energized delay	single operation: typ. 1.7 ms / 50 µs; periodical: typ. 5 µs / 50 µs

937TH-DOSND-IP1

Environmental and Mechanical Specifications	
Operating temperature	-20...+60 °C (-4...+140 °F)
Protection degree	IP20
Weight	approx. 100 g (0.22 lb)
Dimensions	12.5 x 114 x 119 mm (0.5 x 4.5 x 4.7 in)
Mounting	on 35 mm DIN mounting rail according to EN 60715:2001
Data for application in connection with Ex-areas	
Group, category, type of protection	Ex II (1)G [Ex ia Ga] IIC, Ex II (1)D [Ex ia Da] IIIC, Ex I (M1) [Ex ia Ma] I
	[Ex ia Ga] IIC, [Ex ia Da] IIIC, [Ex ia Ma] I
Output	
Voltage U_0	25.2V
Current I_0	110 mA
Power P_0	693 mW
Input	
Maximum safe voltage U_m	250V
Group, category, type of protection, temperature class	Ex II 3G Ex nA IIC T4 Gc
Electrical isolation	
Input / output	safe electrical isolation according to IEC/EN 60079-11, voltage peak value 375V
Directive conformity	
Directive 94 / 9 / EC	EN 60079-0:2009, EN 60079-11:2007, EN 60079-15:2005, EN 61241-11:2006

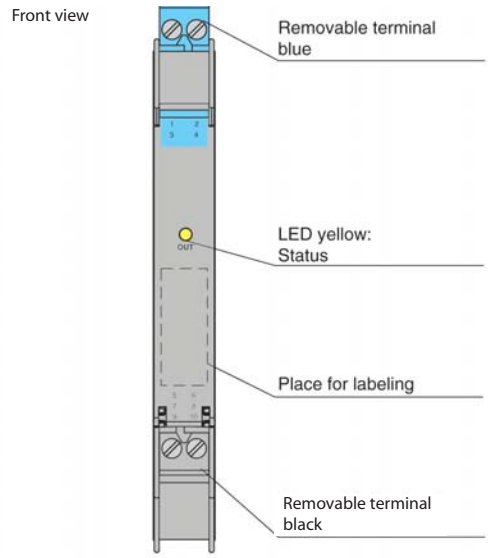

Product Features

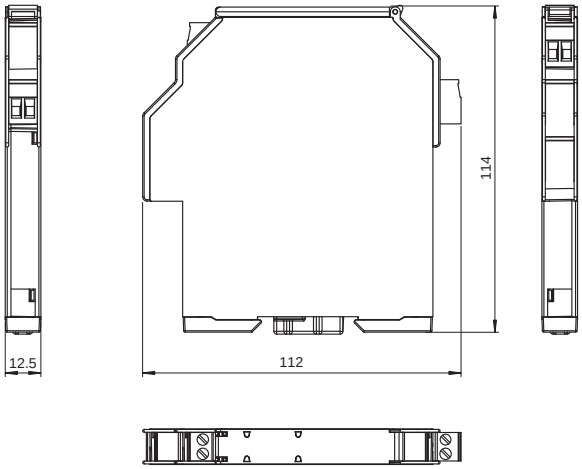

Approximate Dimensions

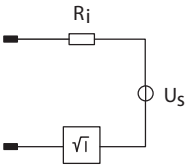

Output Circuit and Diagram

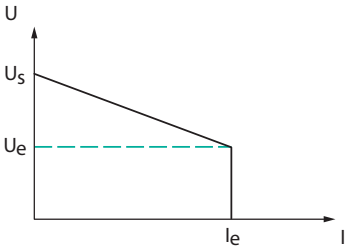

Output Characteristics

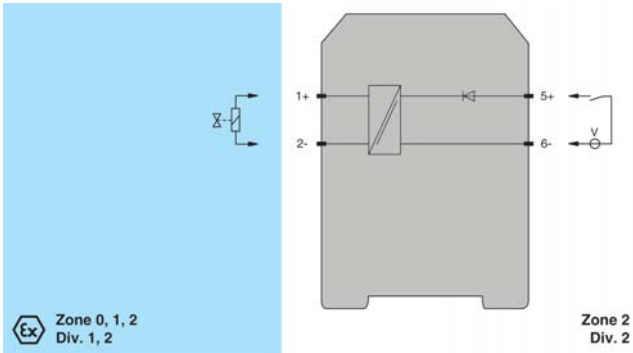

Wiring Diagram

SMART Power Supply

1-ch, 24V DC

937TH-AITXP-DC1

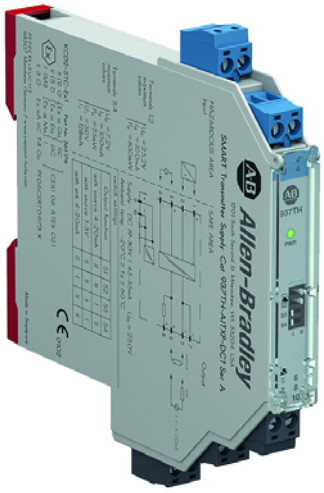

- 1-channel isolated barrier
- 24V DC supply (Power Rail)
- Input for 2-wire SMART transmitters and current sources
- Output for 4...20 mA or 1...5 V
- Sink or source mode
- Housing width 12.5 mm (0.5 in)
- Up to SIL 2 according to IEC 61508

This isolated barrier is used for intrinsic safety applications. The device supplies 2-wire SMART transmitters in a hazardous area, and can also be used with 2-wire SMART current sources. It transfers the analog input signal to the safe area as an isolated current value. Digital signals may be superimposed on the input signal in the hazardous or safe area and are transferred bidirectionally. Selectable output of current source, sink mode, or voltage output is available via DIP switches. If the HART communication resistance in the loop is too low, the internal resistance of 250 Ω between terminals 6 and 8 can be used. Test sockets for the connection of HART communicators are integrated into the terminals of the device.

Description	24V DC, 1-channel
Signal type	Analog input
Supply	
Connection	Power Rail or terminals 9+, 10-
Rated voltage	19...30V DC
Ripple	≤10%
Rated current	≤45 mA
Power loss	≤800 mW
Power consumption	≤1.1 W
Input	
Connection	terminals 1+, 2-; 3+, 4-
Input signal	4...20 mA limited to approx. 30 mA
Open circuit voltage / short-circuit current	terminals 1+, 2-: 22V / 30 mA
Voltage drop	terminals 3+, 4-: approx. 5V
Available voltage	terminals 1+, 2-: ≥15V at 20 mA
Output	
Connection	terminals 5-, 6+
Load	0...300 Ω (source mode)
Output signal	4...20 mA or 1...5 V (on 250 Ω, 0.1% internal shunt) 4...20 mA (sink mode), operating voltage 15.5...26 V
Ripple	20 mV_{rms}
Transfer characteristics	
Deviation	at 20 °C (68 °F)
	≤ ± 0.1% incl. non-linearity and hysteresis (source mode 4...20 mA)
	≤ ± 0.2% incl. non-linearity and hysteresis (sink mode 4...20 mA)
	≤ ± 0.2% incl. non-linearity and hysteresis (source mode 1...5 V)
Influence of ambient temperature	<2 mA/K (0...70 °C (32...158 °F)); <4 mA/K (-20...0 °C (-4...+32 °F)) (source mode and sink mode 4...20 mA)
	<0.5 mV/K (0...70 °C (32...158 °F)); <1 mV/K (-20...0 °C (-4...+32 °F)) (source mode 1...5 V)
Frequency range	field side into the control side: bandwidth with 0.5 V_{pp} signal 0...3 kHz (-3 dB)
	control side into the field side: bandwidth with 0.5 V_{pp} signal 0...3 kHz (-3 dB)
Settling time	≤200 ms
Rise time / fall time	≤20 ms
Electrical isolation	
Input / output	reinforced insulation according to EN 50178, rated insulation voltage $300V_{eff}$
Input / power supply	
Output/power supply	

937TH-AITXP-DC1

Directive conformity	
Electromagnetic compatibility	
Directive 2004 / 108 / EC	EN 61326-1:2006
Conformity	
Electromagnetic compatibility	NE 21:2006
Protection degree	IEC 60529:2001
Environmental and Mechanical Specifications	
Operating temperature	-20...+70 °C (-4...+158 °F)
Protection degree	IP20
Weight	approx. 100 g (0.22 lb)
Dimensions	12.5 x 114 x 124 mm (0.5 x 4.5 x 4.9 in)
Mounting	on 35 mm DIN mounting rail according to EN 60715:2001
Data for application in connection with Ex-areas	
Group, category, type of protection	Ex II (1)G [Ex ia Ga] IIC, Ex II (1)D [Ex ia Da] IIIC, Ex I (M1) [Ex ia Ma] I
Input	[Ex ia Ga] IIC, [Ex ia Da] IIIC, [Ex ia Ma] I
Supply	
Maximum safe voltage U_m	250V AC
Equipment	terminals 1+, 2-
Voltage U_0	25.2V
Current I_0	100 mA
Power P_0	630 mW
Equipment	terminals 3+, 4-
Voltage U_i	<30V
Current I_i	<128 mA
Voltage U_0	7.2V
Current I_0	100 mA
Power P_0	25 mW
Internal Capacitance Ci	5.7 nF
Internal Inductance Li	Negligible
Group, category, type of protection, temperature class	<Ex> II 3G Ex nA IIC T4 Gc
Electrical isolation	
Input / output	safe electrical isolation according to IEC/EN 60079-11, voltage peak value 375V
Input / power supply	
Directive conformity	
Directive 94 / 9 / EC	EN 60079-0:2009, EN 60079-11:2007, EN 60079-15:2005 , EN 60079-26:2007, EN 61241-11:2006 , EN 50303:2000

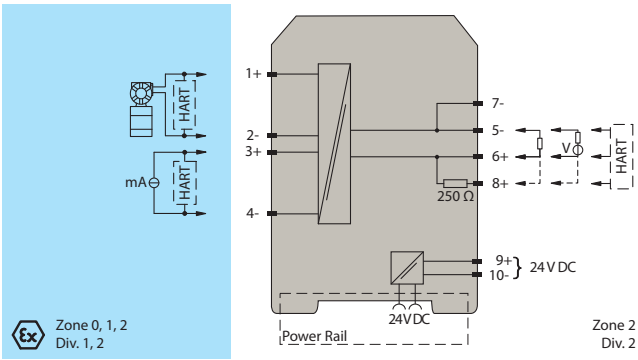

Wiring Diagram

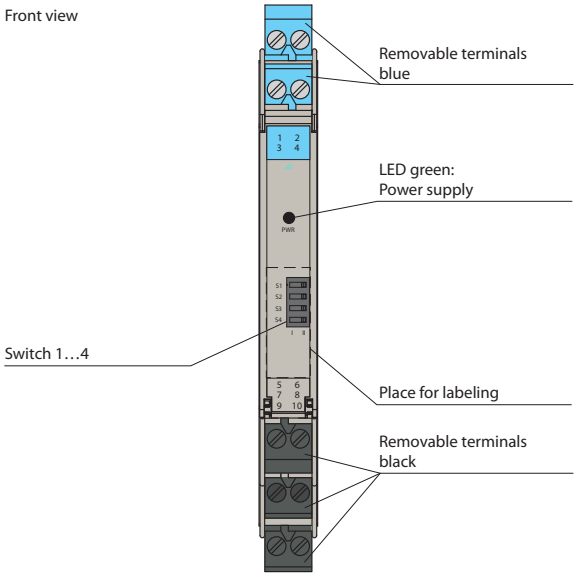

Product Features

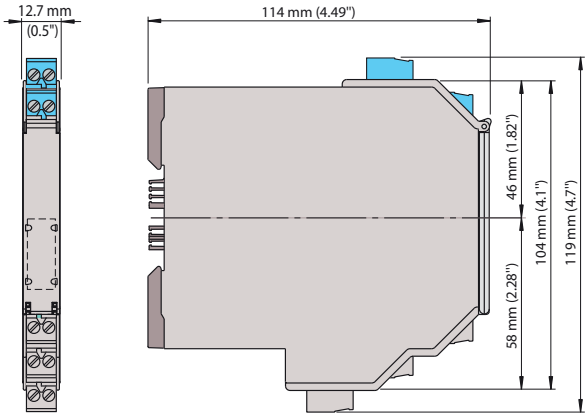

Approximate Dimensions

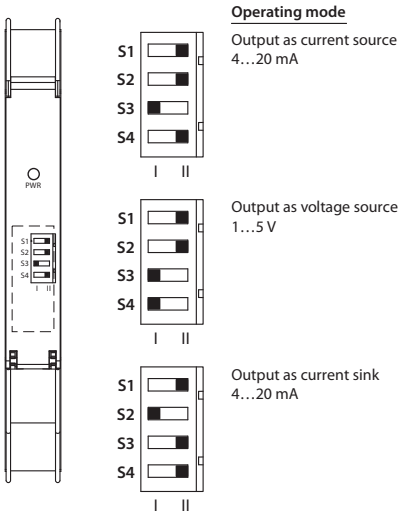

Factory settings: output as current source 4…20 mA

Configuration

SMART Power Supply

2-ch, 24V DC

937TS-AITXP-DC2

- 2-channel isolated barrier
- 24V DC supply (Power Rail)
- Input 2-wire SMART transmitters
- Output for 0 / 4...20 mA
- Terminals with test points
- Up to SIL 2 according to IEC 61508

This isolated barrier is used for intrinsic safety applications. The device supplies 2-wire SMART transmitters in a hazardous area. It transfers the analog input signal to the safe area as an isolated current value.

Digital signals may be superimposed on the input signal in the hazardous or safe area and are transferred bidirectionally.

If the HART communication resistance in the loop is too low, the internal resistance of 250 Ω between terminals 8, 9 and 11, 12 can be used.

This device supports HART protocols, test sockets for the connection of HART communicators are integrated into the terminals.

Description	24V DC, 2-channel
Signal type	Analog input
Supply	
Connection	Power Rail or terminals 14+, 15-
Rated voltage	20...35V DC
Ripple	within the supply tolerance
Power loss	1.8 W
Power consumption	≤2.7 W
Input	
Connection	terminals 1+, 3-; 4+, 6-
Input signal	0 / 4...20 mA
Available voltage	≤16V at 20 mA, terminals 1+, 3-
Output	
Connection	terminals 7-, 8+; 10-, 11+
Load	0...550 Ω
Output signal	0 / 4...20 mA (overload >25 mA)
Ripple	20 μA_{rms}
Transfer characteristics	
Deviation	at 20 °C (68 °F), 0/4...20 mA
	≤10 µA incl. calibration, linearity, hysteresis, loads, and fluctuations of supply voltage
Influence of ambient temperature	0.25 µA / K
Frequency range	field side into the control side: bandwidth with 1 V_{pp} signal 0...7.5 kHz (-3 dB)
	safe area to hazardous area: bandwidth with 1 V_{SS} signal 0.3...7.5 kHz (-3 dB)
Settling time	200 µs
Rise time / fall time	20 µs
Electrical isolation	
Output / power supply	functional insulation, rated insulation voltage 50V AC
Output / output	
Directive conformity	
Electromagnetic compatibility	
Directive 2004 / 108 / EC	EN 61326-1:2006
Conformity	
Electromagnetic compatibility	NE 21:2011
Protection degree	IEC 60529:2001
Protection against electrical shock	UL 61010-1:2004

937TS-AITXP-DC2

Environmental and Mechanical Specifications	
Operating temperature	-20...+60 °C (-4...+140 °F)
Protection degree	IP20
Weight	approx. 150 g (0.33 lb)
Dimensions	20 x 124 x 115 mm (0.8 x 4.9 x 4.5 in)
Mounting	on 35 mm DIN mounting rail according to EN 60715:2001
Data for application in connection with Ex-areas	
Group, category, type of protection	Ex II (1)G [Ex ia Ga] IIC, Ex II (1)D [Ex ia Da] IIIC, Ex I (M1) [Ex ia Ma] I
Input	[Ex ia Ga] IIC, [Ex ia Da] IIIC, [Ex ia Ma] I
Voltage	12.2V
Current	93 mA
Power	0.586 W
Supply	
Maximum safe voltage	250V
Group, category, type of protection, temperature class	Ex II 3G Ex nA II T4 [device in zone 2]
Electrical isolation	
Input / output	safe electrical isolation according to IEC/EN 60079-11, voltage peak value 375V
Input / power supply	
Directive conformity	
Directive 94 / 9 / EC	EN 60079-0:2012, EN 60079-11:2007, EN 60079-15:2010, EN 61241-11:2006

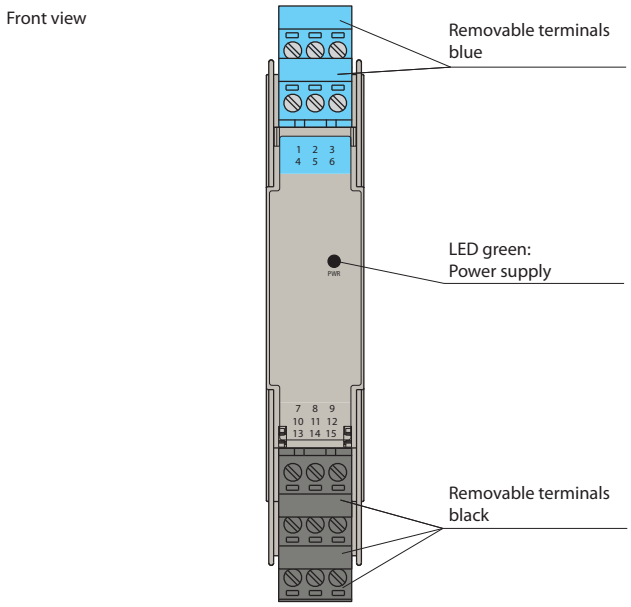

Product Features

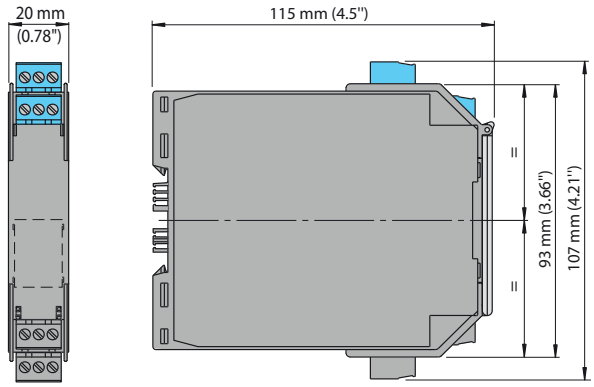

Approximate Dimensions

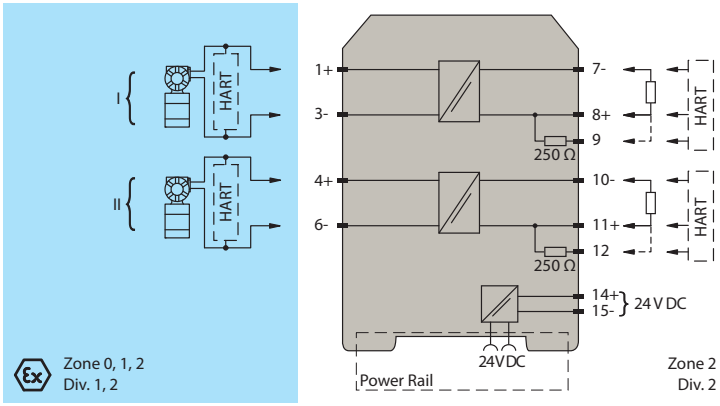

Wiring Diagram

SMART Power Supply with Splitter

1-ch, 24V DC

937TH-AITXS-DC1

- 1-channel isolated barrier
- 24V DC supply (Power Rail)
- Input for 2-wire SMART transmitters and current sources
- Signal splitter (1 input and 2 outputs)
- Dual output 0 / 4...20 mA or 0 / 1...5 V
- Terminal blocks with test sockets
- Up to SIL 2 according to IEC 61508

This isolated barrier is used for intrinsic safety applications. The device supplies 2-wire transmitters in the hazardous area, and can also be used with current sources. It transfers the analog input signal to the safe area as two isolated output signals. Bidirectional communication is supported for SMART transmitters that use current modulation to transmit data and voltage modulation to receive data. The output is selected as a current source, current sink, or voltage source via switches. Test sockets for the connection of HART communicators are integrated into the terminals of the device.

Description	24V DC, 1-channel with Splitter
Signal type	Analog input
Supply	
Connection	Power Rail or terminals 9+, 10-
Rated voltage	18...30V DC
Ripple	within the supply tolerance
Rated current	—
Power loss	approx. 1.4 W at 20 mA transfer current, 250 Ω in both outputs
Power consumption	2 W
Input	
Connection	terminals 1+, 2- (sink); 3+, 4- (source)
Input signal	0 / 4...20 mA
Voltage drop	≤6.1V at 20 mA (terminals 3, 4)
Input Resistance	terminals 3+, 4-: ≤310 Ω
	terminals 1+, 2-: ≤500 Ω (250 Ω load)
Available voltage	≥15V at 20 mA terminals 1+, 2-
Output	
Connection	source: terminals 5-, 6+; 7-, 8+ sink: terminals 5+, 6-, 7+, 8-
Load	channel 1: 0...500 Ω channel 2: 0...500 Ω
Output signal	0 / 4...20 mA or 0 / 1...5 V
Ripple	50 μA_{rms}
Transfer characteristics	
Deviation	I_{out} <20 mA; V_{out} <7.5 mV incl. calibration, linearity, hysteresis and fluctuation of supply voltage, at 20 °C (68 °F), 0 / 4...20 mA, 0 / 1...5 V
Influence of ambient temperature	0.25 µA / K
Frequency range	field side into the control side: bandwidth with 0.5 V_{pp} signal 0...7.5 kHz (-3 dB)
	control side into the field side: bandwidth with 0.5 V_{pp} signal 0.3...7.5 kHz (-3 dB)
Settling time	200 µs
Rise time / fall time	20 µs
Electrical isolation	
Output / power supply	functional insulation, rated insulation voltage 50V AC
Output / output	
Directive conformity	
Electromagnetic compatibility	
Directive 2004 / 108 / EC	EN 61326-1:2006
Conformity	
Electromagnetic compatibility	NE 21:2006
Protection degree	IEC 60529:2001
Protection against electrical shock	UL 61010-1

937TH-AITXS-DC1

Environmental and Mechanical Specifications	
Operating temperature	-20...+60 °C (-4...+140 °F)
Protection degree	IP20
Weight	approx. 100 g (0.22 lb)
Dimensions	12.5 x 114 x 124 mm (0.5 x 4.5 x 4.9 in)
Mounting	on 35 mm DIN mounting rail according to EN 60715:2001
Data for application in connection with Ex-areas	
Group, category, type of protection	Ex II (1)G [Ex ia Ga] IIC, Ex II (1)D [Ex ia Da] IIIC, Ex I (M1) [Ex ia Ma] I
Input	[Ex ia Ga] IIC, [Ex ia Da] IIIC, [Ex ia Ma] I
Supply	
Maximum safe voltage U_m	250V
Equipment	terminals 1+, 2-
Voltage U_o	25.2V
Voltage U_q	28.2V
Current I_o	93 mA
Power P_o	656 mW
Equipment	terminals 3+, 4-
Voltage U_i	30V
Current I_i	115 mA
Power P_i	700 mW
Voltage U_o	5V
Current I_o	6.8 mA
Power P_o	1.6 mW
Output	
Maximum safe voltage U_m	250V
Group, category, type of protection, temperature class	Ex II 3G Ex nA II T4 Gc [device in zone 2]
Electrical isolation	
Input / output	safe electrical isolation according to IEC/EN 60079-11, voltage peak value 375V
Input / power supply	
Directive conformity	
Directive 94 / 9 / EC	EN 60079-0:2009, EN 60079-11:2012, EN 60079-15:2010

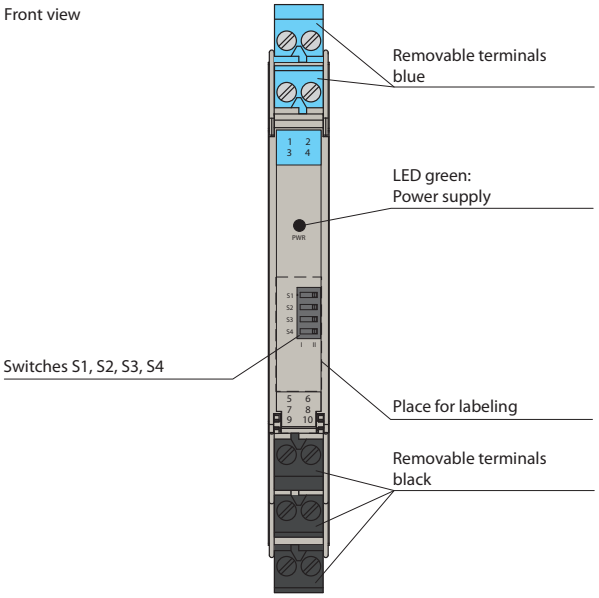

Product Features

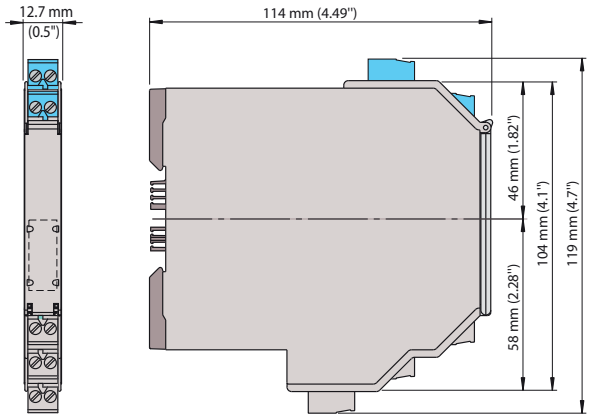

Approximate Dimensions

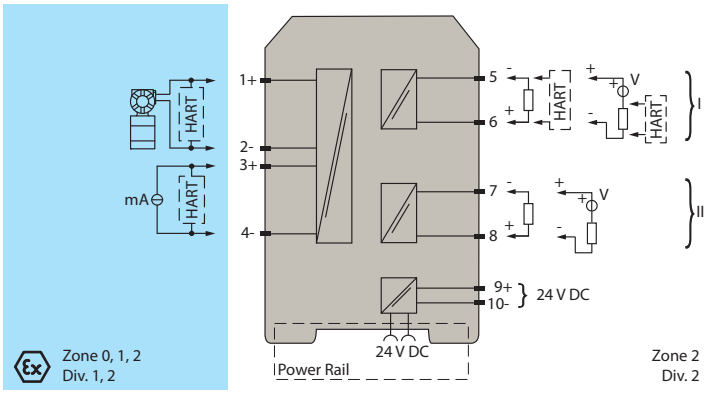

Wiring Diagram

937TH-AITXS-DC1

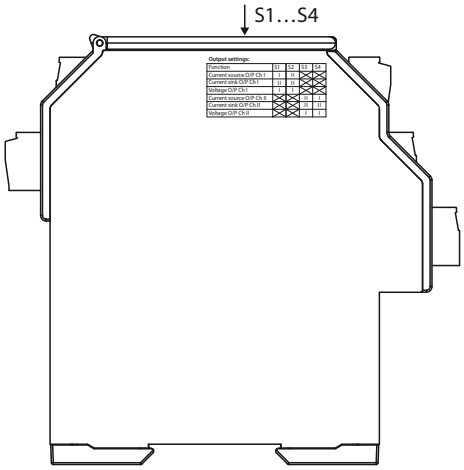

Output settings

Function	S1	S2	S3	S4
Current source output channel I	I	II	X	X
Current sink output channel I	II	II	X	X
Voltage output channel I	I	I	X	X
Current source output channel II	X	X	II	I
Current sink output channel II	X	X	II	II
Voltage output channel II	X	X	I	I

Configuration

Temperature Repeater

1-ch, 24V DC

937TH-AIRRP-DC1

- 1-channel isolated barrier
- 24V DC supply (Power Rail)
- Resistance and RTD input (Pt100, Pt500, Pt1000)
- Resistance output
- Accuracy 0.1%
- Line fault detection (LFD) for Pt100
- Housing width 12.5 mm (0.5 in)

This isolated barrier is used for intrinsic safety applications. It transfers resistance values of RTDs or potentiometers from hazardous areas to safe areas.
A 2-, 3-, or 4-wire technique is available depending on the required accuracy. The input card of the control system measures the same load as if it were connected directly to the resistance in a hazardous area.

Description	24V DC, 1-channel
Signal type	Analog input
Supply	
Connection	Power Rail or terminals 9+, 10-
Rated voltage	19...30V DC
Ripple	within the supply tolerance
Rated current	<20 mA
Power consumption	0.35 W (24 V and 1 mA sense current)
Input	
Connection	terminals 1, 2, 3, 4
Line fault detection	yes, at Pt100
Lead resistance	<10% of resistance value
Transmission range	0...10 mA
Available voltage	9V
Line fault detection	50 nA
Output	
Connection	terminals 5-, 7-, 6+, 8+
Current	0...10 mA
Available voltage	0...7V
Fault signal	<10 Ω or >400 Ω, depending on lead disconnected (measuring current ≤1 mA)
Transfer characteristics	
Deviation	I_m ≥1 mA: ±0.1% of R_m or ±0.1 Ω (the larger value is applicable)
	I_m <1 mA: accuracy reduces in proportion to I_m. e. g. I_m = 0.1 mA: ±1% of R_m or 1 Ω (the larger value is applicable).
Influence of ambient temperature	I_m ≥1 mA, R_m ≥100 Ω: 0.01% / K in the range -20...+60 °C (253...333 K)
	I_m <1 mA or R_m <100 Ω: temperature stability reduces in proportion to I_m or R_m
Rise time	signal response time ≤2 ms (10...90%)
	response to application of I_m: R_m >50 Ω and I_m <5 mA: <5 ms
	response to application of I_m: R_m >30 Ω and I_m <5 mA: <10 ms
	response to application of I_m: R_m >18 Ω and I_m <5 mA: <20 ms
Electrical isolation	
Input / output	reinforced insulation according to EN 50178, rated insulation voltage 300 V_{eff}
Input / power supply	
Output / power supply	functional insulation, rated insulation voltage 50V AC

937TH-AIRRP-DC1

Directive conformity	
Electromagnetic compatibility Directive 2004 / 108 / EC	EN 61326-1:2006
Directive 2004 / 108 / EC	EN 61326-1:2006
Conformity	
Electromagnetic compatibility	NE 21:2006
Protection degree	IEC 60529:2001
Protection against electrical shock	UL 61010-1
Environmental and Mechanical Specifications	
Operating temperature	-20...+60 °C (-4...+140 °F)
Protection degree	IP20
Weight	approx. 100 g (0.22 lb)
Dimensions	12.5 x 114 x 119 mm (0.5 x 4.5 x 4.7 in)
Mounting	on 35 mm DIN mounting rail according to EN 60715:2001
Data for application in connection with Ex-areas	
Group, category, type of protection	Ex II (1)G [Ex ia Ga] IIC, Ex II (1)D [Ex ia Da] IIIC, Ex I (M1) [Ex ia Ma] I
Input	[Ex ia Ga] IIC, [Ex ia Da] IIIC, [Ex ia Ma] I
Voltage U_0	12.4V
Current I_0	17.4 mA
Power P_0	54 mW
Supply	
Maximum safe voltage U_m	253V
Output	
Maximum safe voltage U_m	253V
Group, category, type of protection, temperature class	Ex II 3G Ex nA II T4 Gc [device in zone 2]
Electrical isolation	
Input / output	safe electrical isolation according to IEC/EN 60079-11, voltage peak value 375V
Input / power supply	
Directive conformity	
Directive 94 / 9 / EC	EN 60079-0:2012+A11:2013, EN 60079-11:2012, EN 60079-15:2010

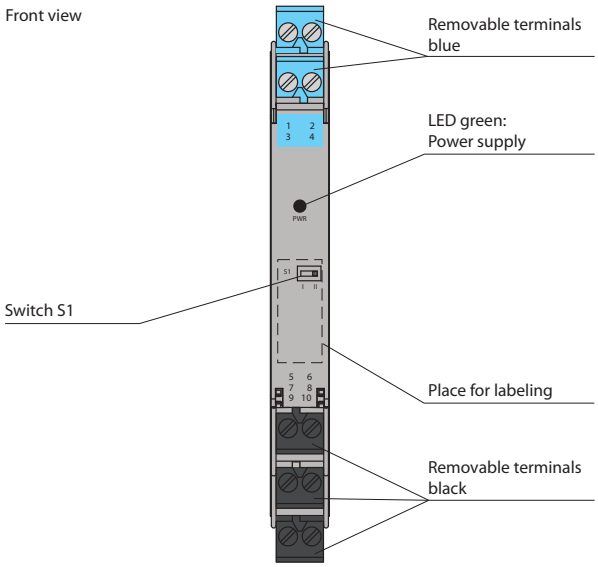

Product Features

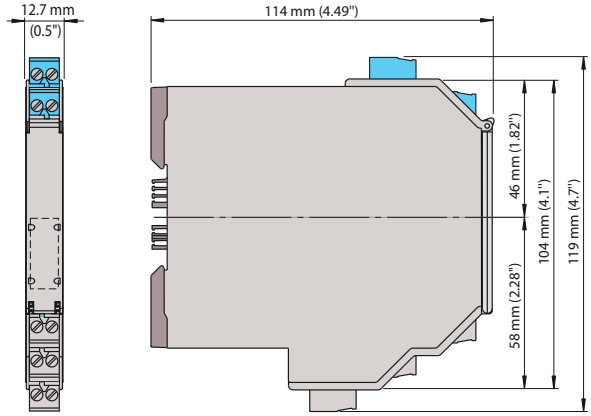

Approximate Dimensions

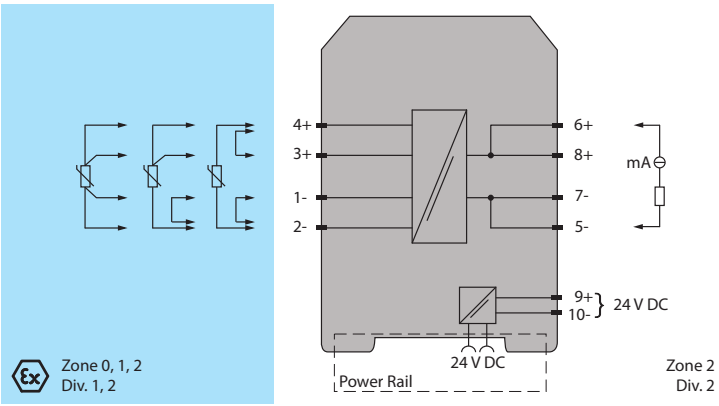

Wiring Diagram

937TH-AIRRP-DC1

Measurement range

The resistance repeater can convey a maximum of 10 mA and a maximum of 7 V. The maximum connectable resistance value can be calculated with the following equations

- Resistance value = 4.2 V / measuring current
- Resistance value = 9 V / measuring current - 758 Ω

Use the smaller of these two resistance values as maximum allowed load.

The measuring current is determined by control.

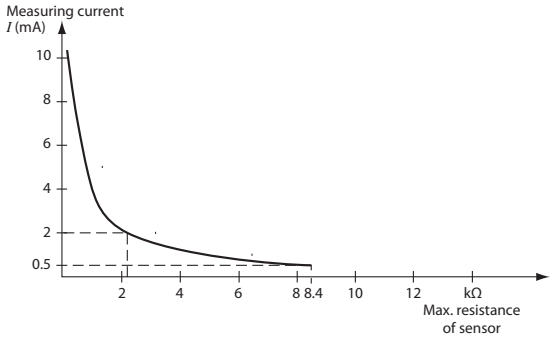

An example of the maximum transferable resistance value:

- 8.4 kΩ at 0.5 mA measuring current
- 2.1 kΩ at 2 mA measuring current

Line Fault Detection (LFD)

The output will indicate less than 10 Ω or greater than 400 Ω for a lead breakage at terminals 1, 2, 3 or 4 for measuring current of less than or equal to 1 mA i.e. out of range for Pt100.

Output Curve

Connection types control side (safe area)

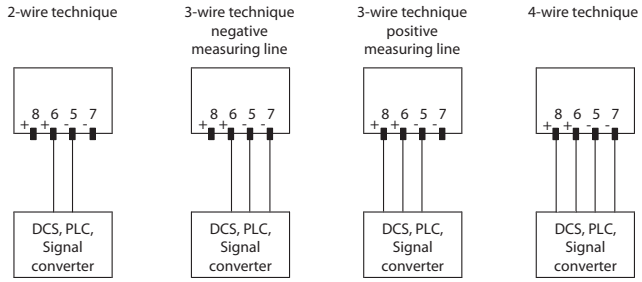

Connection types field side (hazardous area)

The resistance in the hazardous area can be measured with a 2-, 3- or 4-wire technique.

- 2-wire technique:
  Link terminals 1 and 2 and terminals 3 and 4. Connect the resistance to terminal 4 and terminal 2. Switch S1 in the position II.
- 3-wire technique:
  Link terminals 1 and 2. Connect the resistance to terminals 3 and 4 and terminal 2. Switch S1 in the position I.
- 4-wire technique
  Connect the resistance to terminals 3 and 4 and terminals 1 and 2. Switch S1 in the position II.

Connection Types

SMART Current Driver

1-ch, 24V DC

937TH-AOSCD-DC1

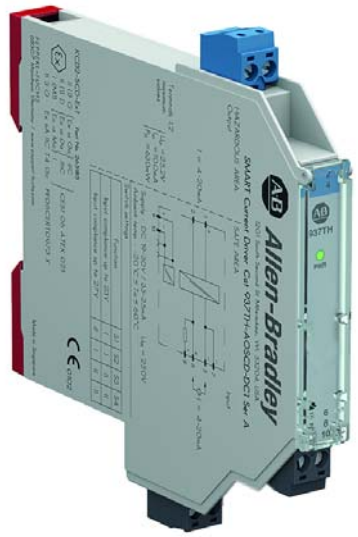

- 1-channel isolated barrier
- 24V DC supply (Power Rail)
- Current output up to 650 Ω load
- HART IP and valve positioner
- Lead breakage monitoring
- Accuracy 0.1%
- Housing width 12.5 mm (0.5 in)
- Up to SIL 2 according to IEC 61508

This isolated barrier is used for intrinsic safety applications. It drives SMART IP converters, electrical valves, and positioners in hazardous areas. Digital signals are superimposed on the analog values at the field or control side and are transferred bidirectionally. Current transferred across the DC/DC converter is repeated at terminals 1 and 2. An open field circuit presents a high input impedance to the control side to allow lead breakage monitoring by control system. Sockets for the connection of a HART communicator are integrated into the terminals of the device.

Description	24V DC, 1-channel
Signal type	Analog output
Supply	
Connection	Power Rail or terminals 9+, 10-
Rated voltage	19...30V DC
Ripple	≤10%
Rated current	≤30 mA
Power loss	≤600 mW
Power consumption	≤700 mW
Input	
Connection	terminals 5-, 6+
Input signal	4...20 mA limited to approx. 30 mA
Input voltage	depending on switch configuration
	open loop voltage of the control system < 23V
	open loop voltage of the control system < 27V
Voltage drop	depending on switch configuration
	open loop voltage of the control system <23V: approx. 6V at 20 mA
	open loop voltage of the control system <27V: approx. 10V at 20 mA
Input resistance	>100 kΩ, with field wiring open
Output	
Connection	terminals 1+, 2-
Current	4...20 mA
Load	0...650 Ω
Voltage	≥13V at 20 mA
Ripple	20 mV_{rms}
Transfer characteristics	
Deviation	at 20 °C (68 °F), 0 / 4...20 mA ≤± 0.1% incl. non-linearity and hysteresis
Influence of ambient temperature	<2 µA / K (0...70 °C (32...158 °F)); <4 µA / K (-20...0 °C (-4...+32 °F))
Frequency range	field side into the control side: bandwidth with 0.5 V_{pp} signal 0...3 kHz (-3 dB)
	control side into the field side: bandwidth with 0.5 V_{pp} signal 0...3 kHz (-3 dB)
Rise time	10...90% ≤100 ms
Electrical isolation	
Input / output	reinforced insulation according to EN 50178, rated insulation voltage $300V_{eff}$
Input / power supply	
Output / power supply	
Directive conformity	
Directive 2004 / 108 / EC	EN 61326-1:2006
Electromagnetic compatibility	NE 21
Protection degree	IEC 60529

937TH-A0SCD-DC1

Environmental and Mechanical Specifications	
Operating temperature	-20...+70 °C (-4...+158 °F)
Protection degree	IP20
Weight	approx. 100 g (0.22 lb)
Dimensions	12.5 x 114 x 119 mm (0.5 x 4.5 x 4.7 in)
Mounting	on 35 mm DIN mounting rail according to EN 60715:2001
Data for application in connection with Ex-areas	
Group, category, type of protection	Ex II (1)G [Ex ia Ga] IIC, Ex II (1)D [Ex ia Da] IIIC, Ex I (M1) [Ex ia Ma] I
Output	[Ex ia Ga] IIC, [Ex ia Da] IIIC, [Ex ia Ma] I
Supply	
Maximum safe voltage U_m	250V AC
Equipment	terminals 1+, 2-
Voltage U_0	25.2V
Current I_0	100 mA
Power P_0	630 mW
Internal Capacitance Ci	5.7 nF
Internal Inductance Li	Negligible
Group, category, type of protection, temperature class	Ex II 3G Ex nA IIC T4 Gc
Electrical isolation	
Input / output	safe electrical isolation according to IEC/EN 60079-11, voltage peak value 375V
Output / power supply	
Directive conformity	
Directive 94 / 9 / EC	EN 60079-0:2009, EN 60079-11:2007, EN 60079-15:2005, EN 60079-26:2007, EN 61241-11:2006, EN 50303:2000

Front view

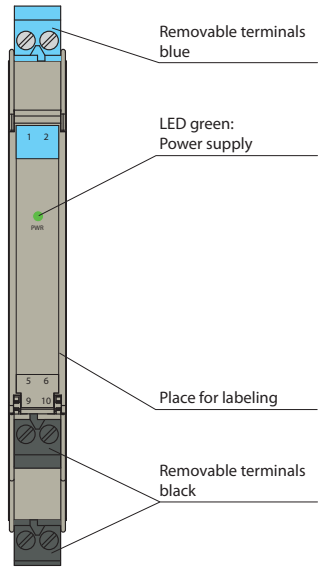

Product Features

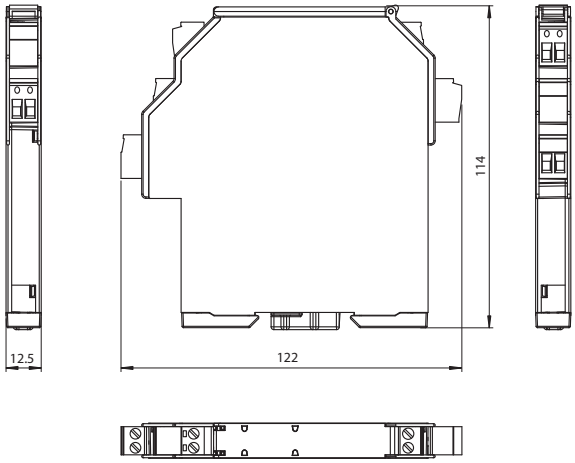

Approximate Dimensions

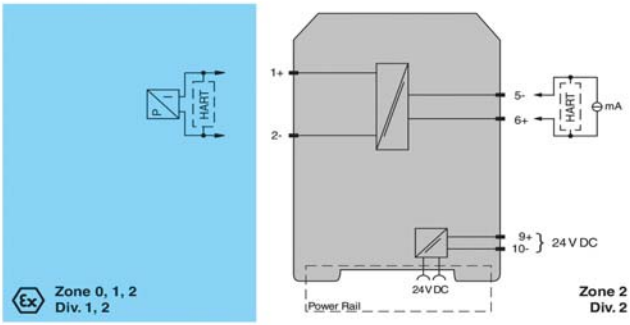

Wiring Diagram

Converter Barriers

Converters add functionality to the isolators by receiving signals from a hazardous area instrument, for example, temperature sensors, or load cells and then converting them to an industry standardized signal such as 0 / 4...20 mA or 0 / 2...10V.
Pulse evaluation units process a frequency signal at the input. A lead fault monitoring system signals a lead breakage or lead short-circuit on the signal cables.

Universal Temperature Converters
Universal Temperature Converters are designed to connect RTDs, thermocouples or potentiometers in the hazardous area, and provide a proportional 0 / 4...20 mA signal to the safe area.

Strain Gauge Converters
Strain Gauge Converters are used with strain gauges, load cells and resistance measuring bridges.

Transmitter Supply Converters
Transmitter Supply Converters supply 2-wire and 3-wire transmitters in a hazardous area, and can also be used with active current sources.

Universal Frequency Converters
Universal Frequency Converters change a digital input (NAMUR sensor/mechanical contact) into a proportional, adjustable 0 / 4...20 mA analog output and functions as a switch amplifier and a trip alarm.

HART Loop Converters
HART Loop Converters provide power to transmitters or can be connected to existing HART loops in parallel. They are able to evaluate up to four HART variables (PV, SV, TV, QV). Of those four HART variables, the data that is contained in any three of them can be converted to three different 4...20 mA current signals.

FDT Interface
Configuring converter modules is convenient with a PC using Field Device Tool (FDT) software. Some specialized functions can only be selected using the FDT. The FDT interface is the specification describing the standardized data exchange between devices and control system or engineering or asset management tools. Examples include: PACTware™, FieldCare, FactoryTalk® AssetCentre, and Process Device Configuration.
FDT frame software can be downloaded at, http://www.pactware.com
PACTware is trademark of PACTware Consortium

Catalog Number Explanation

Note: Examples given in this section are for reference purposes. This basic explanation should not be used for product selection; some combinations may not produce a valid catalog number.

937C	U	-	AI	TXF	-	KD	1
	a		b	c	-	d	e

a

Module Profile	
Code	**Description**
H	High-density 12.5 mm (0.5 in) module
S	Standard 20 mm module
U	Universal 40 mm module

b

I/O Type	
Code	**Description**
DI	Digital In
DO	Digital Out
AI	Analog In
AO	Analog Out

c

Functionality	
Code	**Description**
TMP	Converter, Temperature (1)
FRQ	Converter, Frequency with trip alarm
TXF	Converter, Transmitter Power Supply with trip alarm
HLP	Converter, HART Loop Power
STR	Converter, Strain Gauge

(1) FDT Software required to program this module.

d

Power	
Code	**Description**
IP	Input Loop Powered
DC	24V DC
BC	20...90V DC/48...253V AC
KD	115V AC
KF	230V AC

e

Channels	
Code	**Description**
1	Single Channel
2	Dual Channel

Universal Temperature Converter

1-ch, 24V DC

937CS-AITMP-DC1

- 1-channel isolated barrier
- 24V DC supply (Power Rail)
- TC, RTD, potentiometer or voltage input
- Current output 0 / 4...20 mA
- Sink or source mode
- Configurable by PACTware
- Line fault (LFD) and sensor burnout detection
- Up to SIL 2 according to IEC 61508/IEC 61511

This isolated barrier is used for intrinsic safety applications. It is designed to connect RTDs, thermocouples, or potentiometers in the hazardous area, and provide a proportional 0 / 4...20 mA signal to the safe area. The barrier offers 3-port isolation between input, output, and power supply.

A removable terminal block is available for thermocouples when internal cold junction compensation is desired (Cat. No. 937A-TCJC).

A fault is indicated by a red flashing status indicator per NAMUR NE44 and user-configured fault outputs.

The unit is easily programmed with the FDT configuration software. A collective error messaging feature is available when used with the Power Rail system.

Description	24V DC, 1-channel
Signal type	Analog input
Supply	
Connection	terminals 14+, 15- or power feed module / Power Rail
Rated voltage	20...30V DC
Ripple	within the supply tolerance
Power loss / power consumption	≤0.98 W / 0.98 W
Input	
Connection	terminals 1, 2, 3, 4
RTD	type Pt10, Pt50, Pt100, Pt500, Pt1000 (EN 60751: 1995)
	type Pt10GOST, Pt50GOST, Pt100GOST, Pt500GOST, Pt1000GOST (6651-94)
	type Cu10, Cu50, Cu100 (P50353-92)
	type Ni100 (DIN 43760)
Measuring current	approx. 200 µA with RTD
Types of measuring	2-, 3-, 4-wire connection
Lead resistance	≤50 Ω per lead
Measuring circuit monitoring	sensor breakage, sensor short-circuit
Thermocouples	type B, E, J, K, N, R, S, T (IEC 584-1: 1995)
	type L (DIN 43710: 1985)
	type TXK, TXKH, TXA (P8.585-2001)
Cold junction compensation	external and internal
Measuring circuit monitoring	sensor breakage
Voltage	selectable within the range -100...100 mV
Potentiometer	0...20 kΩ (2-wire connection), 0.8...20 kΩ (3-wire connection)
Input resistance	≥1 M Ω (-100...100 mV)
Output	
Connection	output I: terminal 7: source (-), sink (+), terminal 8: source (+), terminal 9: sink(-)
Output	analog current output
Current range	0...20 mA or 4...20 mA
Fault signal	downscale 0 or 2 mA, upscale 21.5 mA (according NAMUR NE43)
Source	load 0...550 Ω
	open-circuit voltage ≤18V
Sink	Voltage across terminals 5...30V. If the current is supplied from a source >16.5V
	series resistance of ≥(V - 16.5) / 0.0215 Ω is needed, where V is the source voltage.
	The maximum value of the resistance is (V - 5) / 0.0215 Ω

937CS-AITMP-DC1

Transfer characteristics		
Deviation		
After calibration	Pt100	±(0.06% of measurement value in K +0.1% of span +0.1 K (4-wire connection))
	Thermocouple	±(0.05% of measurement value in °C +0.1% of span +1 K (1.2 K for types R and S)) this includes ± 0.8 K error of the cold junction compensation
	mV	±(50 µV +0.1% of span)
	Potentiometer	±(0.05% of full scale +0.1% of span, (excludes errors due to lead resistance))
Influence of ambient temperature (deviation of CJC included)	Pt100	±(0.0015% of measurement value in K +0.006% of span) / K ΔT_{amb} (1))
	Thermocouple	±(0.02 K +0.005% of measurement value in °C +0.006% of span) / K ΔT_{amb} (1))
	mV	±(0.01% of measurement value +0.006% of span) / K ΔT_{amb} (1))
	Potentiometer	±0.006% of span / K ΔT_{amb} (1) (1) ΔT_{amb} = ambient temperature change referenced to 23 °C (296 K)
Influence of supply voltage		<0.01% of span
Influence of load		≤0.001% of output value per 100 Ω
Reaction time		worst case value (sensor breakage and / or sensor short circuit detection enabled)
		mV: 1 s, thermocouples with CJC: 1.1 s, thermocouples with fixed reference temperature: 1.1 s, 3- or 4-wire RTD: 920 ms, 2-wire RTD: 800 ms, Potentiometer: 2.05 s
Electrical isolation		
Output/supply, programming input		functional insulation, rated insulation voltage 50V AC
		There is no electrical isolation between the programming input and the supply.
		The programming cable provides galvanic isolation so that ground loops are avoided.
Directive conformity		
Electromagnetic compatibility		
Directive 2004 / 108 / EC		EN 61326-1:2006
Conformity		
Electromagnetic compatibility		NE 21:2006
Protection degree		IEC 60529:2001
Protection against electrical shock		UL 61010-1:2004
Environmental and Mechanical Specifications		
Operating temperature		-20...+60 °C (-4...+140 °F)
Protection degree		IP20
Weight		approx. 130 g
Dimensions		20 x 119 x 115 mm (0.8 x 4.7 x 4.5 in)
Mounting		on 35 mm DIN mounting rail according to EN 60715:2001

Data for application in connection with Ex-areas	
Group, category, type of protection	Ex II (1) GD, I (M1), [Ex ia] IIC, [Ex ia D], [Ex ia] I (-20 °C ≤T_{amb} ≤60 °C) [circuit(s) in zone 0/1/2]
Supply	
Input	Ex ia IIC
Inputs	terminals 1, 2, 3, 4
Voltage U_0	9V
Current I_0	22 mA
Power P_0	50 mW
Analog outputs, power supply, collective error	
Maximum safe voltage U_m	250V
Interface	
Maximum safe voltage U_m	250V
Statement of conformity	TÜV 02 ATEX 1797X, observe statement of conformity
Group, category, type of protection, temperature class	II 3G Ex nA II T4 [device in zone 2]
Electrical isolation	
Input / other circuits	safe electrical isolation according to IEC/EN 60079-11, voltage peak value 375V
Directive conformity	
Directive 94 / 9 / EC	EN 60079-0:2012, EN 60079-11:2012, EN 60079 -15:2010, EN 60079-26:2007, EN 50303:2000

937CS-AITMP-DC1

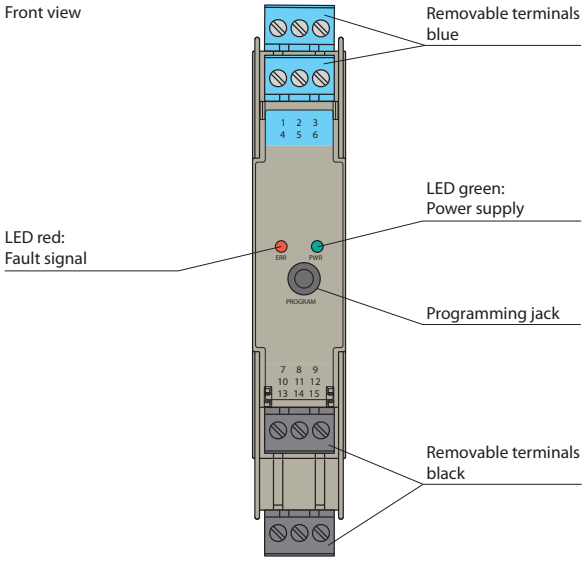

Product Features

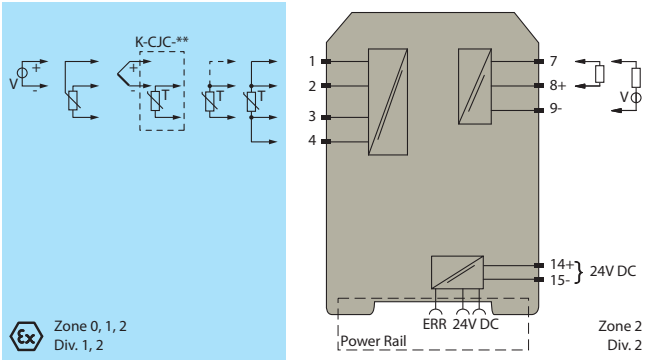

Wiring Diagram

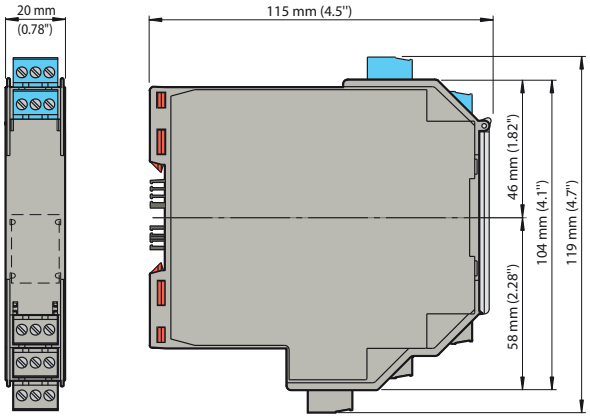

Approximate Dimensions

Frequency Converter

1-ch, 24V DC

937CU-DIFRQ-DC1

- 1-channel isolated barrier
- 24V DC supply (Power Rail)
- Input for NAMUR sensors or dry contacts
- Input frequency 1 mHz...5 kHz
- Current output 0 / 4...20 mA
- Relay and transistor output
- Start-up override
- Line fault detection (LFD)
- Up to SIL 2 according to IEC 61508/IEC 61511

This isolated barrier is used for intrinsic safety applications. The device is a universal frequency converter that changes a digital input signal into a proportional free adjustable 0 / 4...20 mA analog output signal and functions as a switch amplifier and a trip alarm.

The functions of the switch outputs (2 relay outputs and 1 potential free transistor output) are easily adjustable [trip value display (min/max alarm), serially switched output, pulse divider output, error signal output]. The device is easily configured by the use of keypad or with the PACTware configuration software. A fault is signalized by light-emitting diodes according to NAMUR NE44 and a separate collective error message output.

Description	24V DC, 1-channel
Signal type	Digital input
Supply	
Connection	terminals 23+, 24- or power feed module / Power Rail
Rated voltage	20...30V DC
Rated Current	approx. 100 mA
Power loss / power consumption	≤2 W / 2.2 W
Input	
Connection	Input I: intrinsically safe: terminals 1+, 3-
	Input II: non-intrinsically safe: terminals 13+, 14-
Input I	sensor according to EN 60947-5-6 (NAMUR) or mechanical contact
Pulse duration	>50 µs
Input frequency	0.001...5000 Hz
Lead monitoring	breakage I ≤0.15 mA; short-circuit I >6.5 mA
Input II	startup override: 1...1000 s, adjustable in steps of 1 s
Active / Passive	I >4 mA (for min. 100 ms) / I <1.5 mA
Open circuit voltage / short-circuit current	18V / 5 mA
Output	
Connection	output I: terminals 10, 11, 12
	output II: terminals 16, 17, 18
	output III: terminals 19+, 20-
	output IV: terminals 8+, 7-
Output I, II	signal, relay
Mechanical life	5×10^7 switching cycles
Energized / de-energized delay	approx. 20 ms / approx. 20 ms
Output III	electronic output, passive
Contact loading	40V DC
Signal level	1-signal: (L+) - 2.5V (50 mA, short-circuit / overload proof)
	0-signal: switched off (off-state current ≤10 µA)
Output IV	analog
Current range	0...20 mA or 4...20 mA
Open loop voltage	≤24V DC
Load	≤650 Ω
Fault signal	downscale I ≤3.6 mA , upscale ≥21.5 mA (according NAMUR NE43)
Collective error message	Power Rail

937CU-DIFRQ-DC1

Transfer characteristics	
Input I	
Measurement range	0.001...5000 Hz
Resolution	0.1% of the measurement value, ≥0.001 Hz
Accuracy	0.1% of the measurement value, >0.001 Hz
Measuring time	<100 ms
Influence of ambient temperature	0.003% / K (30 ppm)
Output I, II	
Response delay	≤200 ms
Output IV	
Resolution	<10 µA
Accuracy	<20 µA
Influence of ambient temperature	0.005% / K (50 ppm)
Electrical isolation	
Input I / other circuits	reinforced insulation according to IEC/EN 61010-1, rated insulation voltage $300V_{eff}$
Output I, II / other circuits	
Mutual output I, II, III	
Output III / power supply and collective error	basic insulation according to IEC/EN 61010-1, rated insulation voltage $50V_{eff}$
Output III / start-up override	
Output III / IV	
Output IV / power supply and collective error	functional insulation according to IEC 62103, rated insulation voltage $50V_{eff}$
Start-up override / power supply and collective error	
Interface / power supply and collective error	
Interface / output III	basic insulation according to IEC/EN 61010-1, rated insulation voltage $50V_{eff}$
Directive conformity	
Electromagnetic compatibility	
Directive 2004 / 108 / EC	EN 61326-1:2006
Low voltage	
Directive 2006 / 95 / EC	EN 61010-1:2010
Conformity	
Electromagnetic compatibility	NE 21:2006
Protection degree	IEC 60529:2001
Input	EN 60947-5-6:2000

Environmental and Mechanical Specifications	
Operating temperature	-20...+60 °C (-4...+140 °F)
Protection degree	IP20
Weight	approx. 300 g
Dimensions	40 x 119 x 115 mm (1.6 x 4.7 x 4.5 in)
Mounting	on 35 mm DIN mounting rail according to EN 60715:2001
Data for application in connection with Ex-areas	
Group, category, type of protection	Ex II (1) GD, I (M1), [Ex ia] IIC, [Ex ia D], [Ex ia] I (-20 °C ≤T_{amb} ≤60 °C)
Supply	
Maximum safe voltage U_m	40V DC
Input I	terminals 1+, 3- Ex ia IIC, Ex ia D
Voltage U_0	10.1V
Current I_0	13.5 mA
Power P_0	34 mW (linear characteristic)
Input II	terminals 13+, 14- non-intrinsically safe
Maximum safe voltage U_m	40V
Output I, II	terminals 10, 11, 12; 16, 17, 18 non-intrinsically safe
Maximum safe voltage U_m	253V
Contact loading	253V AC / 2 A / cos φ >0.7; 40V DC / 2 A resistive load
Output III	terminals 19+, 20- non-intrinsically safe
Maximum safe voltage U_m	40V DC
Output IV	terminals 8+, 7- non-intrinsically safe
Maximum safe voltage U_m	40V
Interface	RS 232
Maximum safe voltage U_m	40V
Group, category, type of protection, temperature class	Ex II 3G Ex nA nC IIC T4
Output I, II	
Contact loading	50V AC / 2 A / cos φ >0.7; 40V DC / 1 A resistive load
Electrical isolation	
Input / other circuits	safe electrical isolation according to IEC/EN 60079-11, voltage peak value 375V
Directive conformity	
Directive 94 / 9 / EC	EN 60079-0:2009, EN 60079-11:2007, EN 60079 -15:2005, EN 60079-26:2007, EN 61241-11:2006

937CU-DIFRQ-DC1

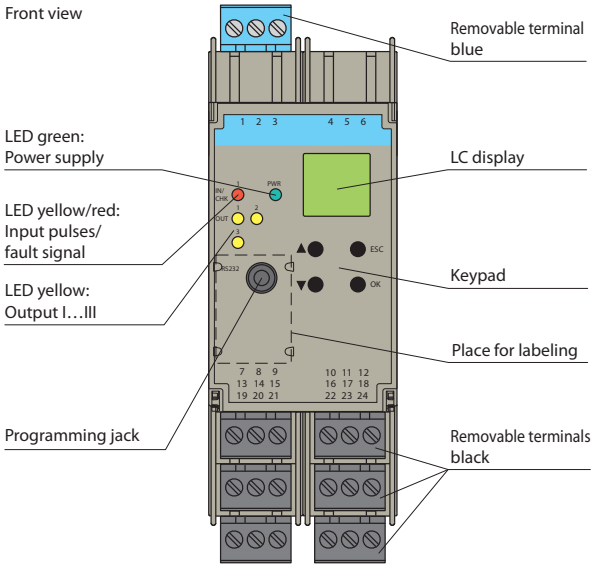

Product Features

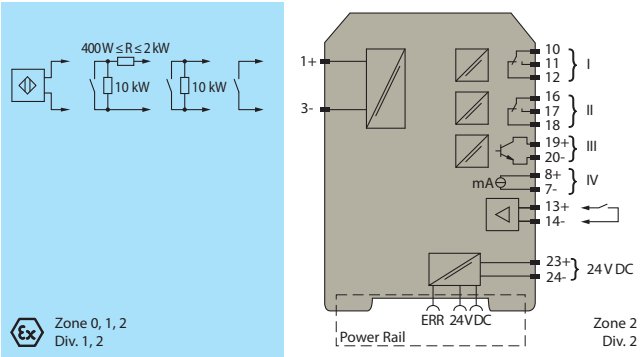

Wiring Diagram

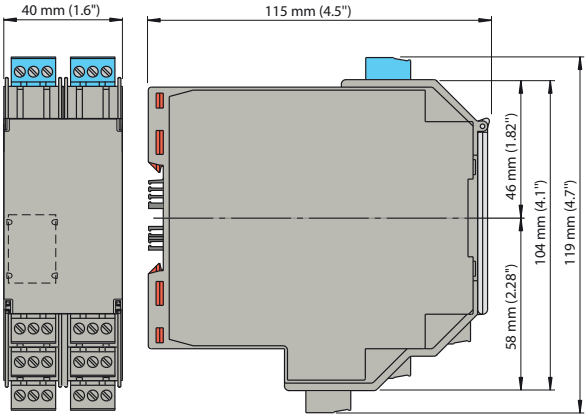

Approximate Dimensions

Frequency Converter

1-ch, 24V AC / DC

937CU-DIFRQ-BC1

- 1-channel isolated barrier
- Universal usage at different power supplies
- Input for NAMUR sensors or dry contacts
- Input frequency 1 mHz...5 kHz
- Current output 0 / 4...20 mA
- Relay and transistor output
- Start-up override
- Line fault detection (LFD)
- Up to SIL 2 according to IEC 61508 / IEC 61511

This isolated barrier is used for intrinsic safety applications. The device is a universal frequency converter that changes a digital input signal into a proportional free adjustable 0 / 4...20 mA analog output signal and functions as a switch amplifier and a trip alarm.

The functions of the switch outputs (2 relay outputs and 1 potential free transistor output) are easily adjustable [trip value display (min. / max alarm), serially switched output, pulse divider output, error signal output]. The device is easily configured by the use of keypad or with the PACTware configuration software. A fault is signalized by light-emitting diodes according to NAMUR NE44.

Description	20...90V DC / 48...253V AC, 1-channel
Signal type	Digital input
Supply	
Connection	terminals 23+, 24-
Rated voltage	20...90V DC / 48...253V AC, 50...60 Hz
Rated Current	approx. 100 mA
Power loss / power consumption	≤2 W; 2.5 VA / 2.2W; 3 VA
Input	
Connection	Input I: intrinsically safe: terminals 1+, 3-
	Input II: non-intrinsically safe: terminals 13+, 14-
Input I	sensor according to EN 60947-5-6 (NAMUR) or mechanical contact
Pulse duration	>50 µs
Input frequency	0.001...5000 Hz
Lead monitoring	breakage I ≤0.15 mA; short-circuit I >6.5 mA
Input II	startup override: 1...1000 s, adjustable in steps of 1 s
Active / Passive	I >4 mA (for min. 100 ms) / I <1.5 mA
Open circuit voltage / short-circuit current	18V / 5 mA
Output	
Connection	output I: terminals 10, 11, 12
	output II: terminals 16, 17, 18
	output III: terminals 19+, 20-
	output IV: terminals 8+, 7-
Output I, II	signal, relay
Mechanical life	5 x 10^7 switching cycles
Energized / de-energized delay	approx. 20 ms / approx. 20 ms
Output III	electronic output, passive
Contact loading	40V DC
Signal level	1-signal: (L+) - 2.5V (50 mA, short-circuit / overload proof)
	0-signal: switched off (off-state current ≤10 mA)
Output IV	analog
Current range	0...20 mA or 4...20 mA
Open loop voltage	≤24V DC
Load	≤650 Ω
Fault signal	downscale I ≤3.6 mA , upscale ≥21.5 mA (according NAMUR NE43)

937CU-DIFRQ-BC1

Transfer characteristics	
Input I	
Measurement range	0.001...5000 Hz
Resolution	0.1% of the measurement value, ≥0.001 Hz
Accuracy	0.1% of the measurement value, >0.001 Hz
Measuring time	<100 ms
Influence of ambient temperature	0.003% / K (30 ppm)
Output I, II	
Response delay	≤200 ms
Output IV	
Resolution	<10 µA
Accuracy	<20 µA
Influence of ambient temperature	0.005% / K (50 ppm)
Electrical isolation	
Input I / other circuits	reinforced insulation accordingly IEC/EN 61010-1, rated insulation voltage $300V_{eff}$
Output I, II / other circuits	
Mutual output I, II, III	
Output III / power supply	
Output III / start-up override	basic insulation according to IEC/EN 61010-1, rated insulation voltage $50V_{eff}$
Output III / IV	
Output IV / power supply	reinforced insulation according to IEC/EN 61010-1, rated insulation voltage $300V_{eff}$
Start-up override / power supply	
Interface / power supply	
Interface / output III	basic insulation according to IEC/EN 61010-1, rated insulation voltage $50V_{eff}$
Directive conformity	
Electromagnetic compatibility	
Directive 2004 / 108 / EC	EN 61326-1:2006
Low voltage	
Directive 2006 / 95 / EC	EN 61010-1:2010
Conformity	
Electromagnetic compatibility	NE 21:2006
Protection degree	IEC 60529:2001
Input	EN 60947-5-6:2000

Environmental and Mechanical Specifications	
Operating temperature	-20...+60 °C (-4...+140 °F)
Protection degree	IP20
Weight	approx. 300 g
Dimensions	40 x 119 x 115 mm (1.6 x 4.7 x 4.5 in)
Mounting	on 35 mm DIN mounting rail according to EN 60715:2001
Data for application in connection with Ex-areas	
Group, category, type of protection	Ex II (1) GD, I (M1), [Ex ia] IIC, [Ex ia D], [Ex ia] I (-20 °C ≤T_{amb} ≤60 °C)
Supply	
Maximum safe voltage U_m	253V AC / 125V DC
Input I	terminals 1+, 3- Ex ia IIC, Ex ia D
Voltage U_0	10.1V
Current I_0	13.5 mA
Power P_0	34 mW (linear characteristic)
Input II	terminals 13+, 14- non-intrinsically safe
Maximum safe voltage U_m	40V
Output I, II	terminals 10, 11, 12; 16, 17, 18 non-intrinsically safe
Maximum safe voltage U_m	253V
Contact loading	253V AC / 2 A / cos φ >0.7; 40V DC / 2 A resistive load (TÜV 99 ATEX 1471)
Output III	terminals 19+, 20- non-intrinsically safe
Maximum safe voltage U_m	40V
Output IV	terminals 8+, 7- non-intrinsically safe
Maximum safe voltage U_m	40V DC
Interface	RS 232, Programming adapter for parameterization via the USB interface of a PC / Notebook
Maximum safe voltage U_m	40V
Electrical isolation	
Input I / other circuits	safe electrical isolation according to IEC/EN 60079-11, voltage peak value 375V
Directive conformity	
Directive 94 / 9 / EC	EN 60079-0:2009, EN 60079-11:2007, EN 60079-26:2007, EN 61241-11:2006

937CU-DIFRQ-BC1

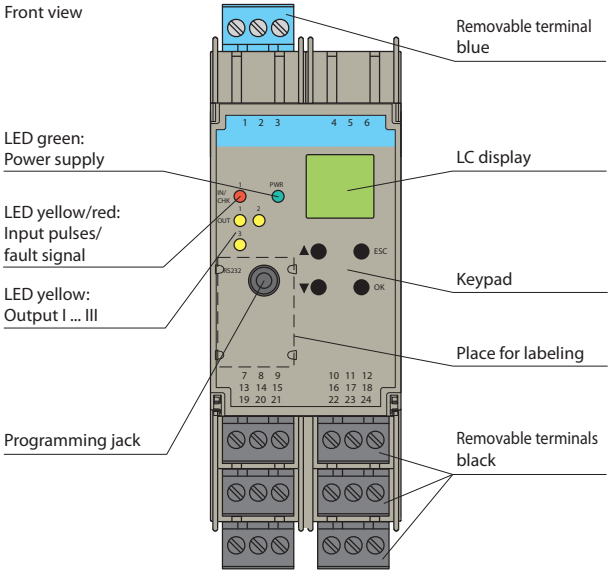

Product Features

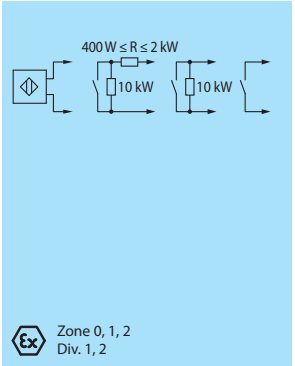

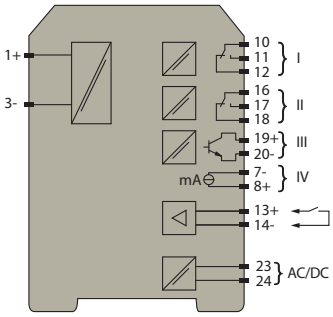

Wiring Diagram

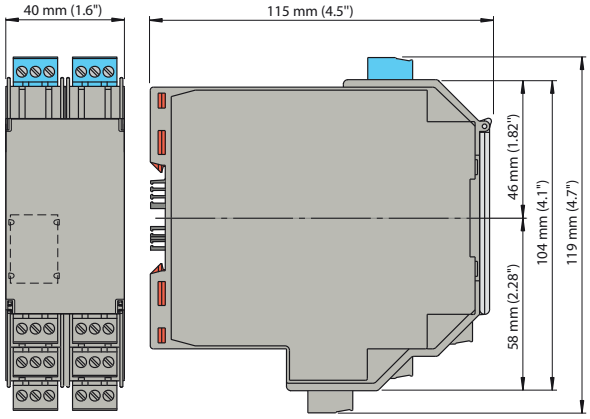

Approximate Dimensions

Transmitter Power Supply

1-ch, 24V DC

937CU-AITXF-DC1

- 1-channel isolated barrier
- 24V DC supply (Power Rail)
- Input 2-wire and 3-wire transmitters and 2-wire current sources
- Output 0 / 4...20 mA
- Two relay contact outputs
- Programmable high / low alarm
- Linearization function (max 20 points)
- Line fault detection (LFD)
- Up to SIL 2 according to IEC 61508/IEC 61511

This isolated barrier is used for intrinsic safety applications. The device supplies 2-wire and 3-wire transmitters, and can also be used with current sources. Two relays and an active 0 / 4...20 mA current source are available as outputs. The relay contacts and the current output can be integrated in security-relevant circuits. The current output is easily scaled. On the display the measured value can be indicated in various physical units. The device is easily configured by the use of keypad or with the PACTware configuration software. The input has a line fault detection. A fault is signalized by light-emitting diodes according to NAMUR NE44 and a separate collective error message output.

Description	24V DC, 1-channel
Signal type	Analog input
Supply	
Connection	Power Rail or terminals 23+, 24-
Rated voltage	20...30V DC
Rated Current	approx. 130 mA
Power loss	2 W
Power consumption	2.5 W
Input	
Connection	terminals 1, 2, 3
Input signal	0 / 4...20 mA
Available voltage	≥15V at 20 mA
Open circuit voltage / short-circuit current	24V / 33 mA
Input resistance	45 Ω (terminals 2, 3)
Lead monitoring	breakage I ≤0.2 mA; short-circuit I >22 mA
Output	
Connection	output I: terminals 10, 11, 12
	output II: terminals 16, 17, 18
	output III: terminals 8+, 7-
Output signal	0...20 mA or 4...20 mA
Output I, II	signal, relay
Contact loading	250V AC / 2 A / cos φ 0.7; 40V DC / 2 A
Mechanical life	5×10^7 switching cycles
Output III	signal, analog
Current range	0...20 mA or 4...20 mA
Open loop voltage	≤24V DC
Load	≤650 Ω
Fault signal	downscale I ≤3.6 mA , upscale I ≥21 mA (according NAMUR NE43)

937CU-AITXF-DC1

Transfer characteristics	
Input I	
Accuracy	<30 mA
Influence of ambient temperature	0.003% / K (30 ppm)
Output I, II	
Response delay	≤200 ms at bounce from 0...20 mA
Output III	
Resolution	≤10 µA
Accuracy	<20 µA
Influence of ambient temperature	0.005% / K (50 ppm)
Reaction time	<650 ms at bounce from 0...20 mA at the input, 90% of output full-scale value
Electrical isolation	
Input I / other circuits	reinforced insulation according to IEC/EN 61010-1, rated insulation voltage $300V_{eff}$
Output I, II / other circuits	
Mutual output I, II, III	
Output III / power supply and collective error	functional insulation according to IEC 62103, rated insulation voltage $50V_{eff}$
Interface / power supply and collective error	
Directive conformity	
Electromagnetic compatibility	
Directive 2004 / 108 / EC	EN 61326-1:2006
Low voltage	
Directive 2006 / 95 / EC	EN 61010-1:2010
Conformity	
Electromagnetic compatibility	NE 21:2006
Protection degree	IEC 60529:2001

Environmental and Mechanical Specifications	
Operating temperature	-20...+60 °C (-4...+140 °F)
Protection degree	IP20
Weight	approx. 300 g
Dimensions	40 x 119 x 115 mm (1.6 x 4.7 x 4.5 in)
Mounting	on 35 mm DIN mounting rail according to EN 60715:2001
Data for application in connection with Ex-areas	
Group, category, type of protection	Ex II (1) G [Ex ia] IIC
	Ex II (1) D [Ex ia D]
Input	Ex ia IIC, Ex ia D
Supply	
Maximum safe voltage U_m	40V DC
Equipment	terminals 1+, 3-
Voltage U_0	25.8V
Current I_0	93 mA
Power P_0	0.603 W
Equipment	terminals 2-, 3
Voltage U_i	<30V
Current I_i	115 mA
Voltage U_0	5V
Current I_0	0.3 mA
Power P_0	0.3 W
Equipment	terminals 1+, 2 / 3-
Voltage U_0	25.8V
Current I_0	112 mA
Power P_0	720 mW
Output I, II	terminals 10, 11, 12; 16, 17, 18, non-intrinsically safe
Maximum safe voltage U_m	253V AC / 40V DC
Contact loading	253V AC / 2 A/cos φ >0.7; 40V DC / 2 A resistive load
Output III	terminals 8+, 7- non-intrinsically safe
Maximum safe voltage U_m	40V
Interface	RS 232
Maximum safe voltage U_m	40V
Group, category, type of protection, temperature class	Ex II 3G Ex nA nC IIC T4
Output I, II	
Contact loading	50V AC / 2 A / cos φ >0.7; 40V DC / 1 A resistive load
Electrical isolation	
Input / other circuits	safe electrical isolation according to IEC/EN 60079-11, voltage peak value 375V
Directive conformity	
Directive 94 / 9 / EC	EN 60079-0:2009, EN 60079-11:2007, EN 60079 -15:2005, EN 60079-26:2007, EN 61241-11:2006

937CU-AITXF-DC1

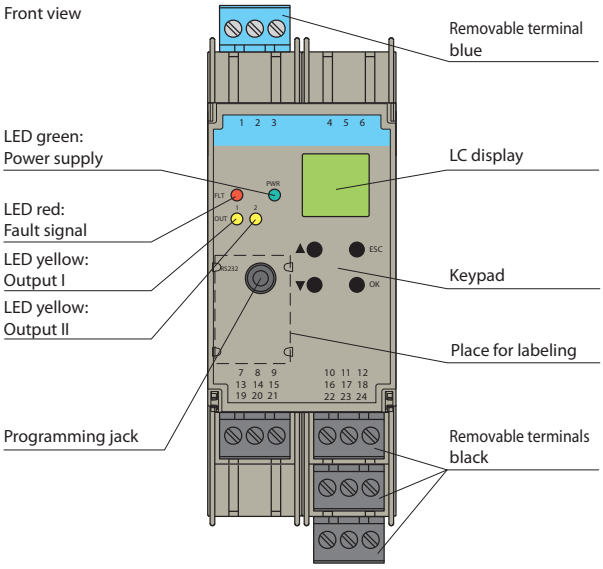

Product Features

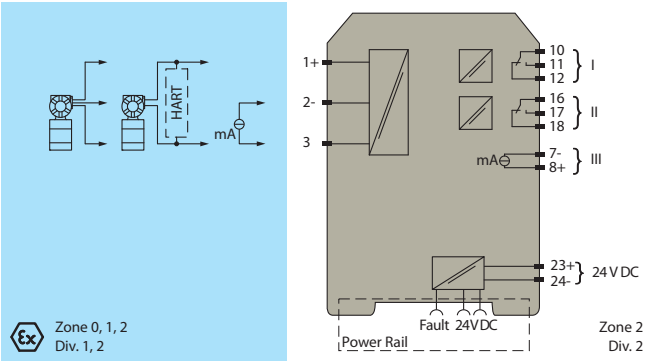

Wiring Diagram

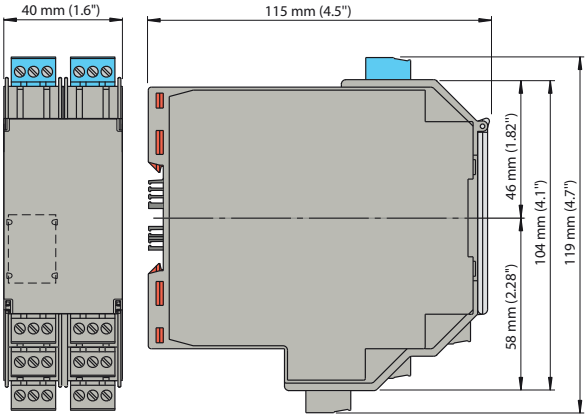

Approximate Dimensions

HART Loop Converter

1-ch, 24V DC

937CU-AIHLP-DC1

- 1-channel isolated barrier
- 24V DC supply (Power Rail)
- HART field device input (revision 5 to 7) with transmitter power supply
- Usable as signal splitter (1 input and multiple outputs)
- Two relay outputs (changeover contacts)
- Three analog outputs 4...20 mA
- Sink and source mode output
- Configurable by keypad

This isolated barrier is used for intrinsic safety applications. It is a HART loop converter that provides power to transmitters or can be connected to existing HART loops in parallel. It is able to evaluate up to four HART variables (PV, SV, TV, QV). Of those four HART variables, the data contained in any three of them can be converted to three different 4...20 mA current signals. These loop signals can be connected to display devices or analog inputs on the process control system / control system. In addition to the current outputs, two form C changeover relay contacts are available and can be programmed to operate at trip values from the HART variables. The unit is easily programmed by the use of a keypad located on the front of the unit or with the PACTware™ configuration software.

Applications

- Configurable as primary or secondary master
- Automatic HART burst supported
- Support for a HART handheld device connected on safe area side
- Can be configured to assign the same input variable to multiple outputs (signal splitting)

Description	24V DC, 1-channel
Signal type	Analog input
Supply	
Connection	Power Rail or terminals 23+, 24-
Rated voltage	19...30V DC
Rated Current	approx. 130 mA at 24V DC
Power loss	2.5 W
Power consumption	3.1 W
HART signal channels (intrinsically safe)	
Conformity	HART field device input (revision 5 to 7)
Input	
Connection	terminals 1, 2, 3, 4, 5, 6
Input signal	HART communication, transmitter supply
Open circuit voltage / short-circuit current	typ. 24V /28 mA
Open circuit voltage / short-circuit current	250 Ω 5% (terminals 2, 3 and with jumper on 5, 6)
Available voltage	≥15.5V at 20 mA, short-circuit protected
Output	
Connection	output I: terminals 10, 11, 12
	output II: terminals 16, 17, 18
	output III: terminals 7, 8, 9
	output IV: terminals 13, 14, 15
	output V: terminals 19, 20, 21
Output I, II	
Output signal	relay and status indicator yellow
Mechanical life	10^7 switching cycles
Energized /de-energized delay	approx. 20 ms / approx. 20 ms
Output III, IV, V	
Output signal	analog
Current range	4...20 mA, source or sink mode
Load	≤650 Ω, source mode
Voltage range	5...30V, sink mode from external supply
Fault signal	downscale I ≤2 mA, upscale I ≥21.5 mA (according NAMUR NE43) or hold measurement value
Other outputs	HART communicator on terminals 22, 24
Collective error message	Power Rail and status indicator red

937CU-AIHLP-DC1

Transfer characteristics	
Output III, IV, V	
Resolution	≤2 µA
Accuracy	<20 µA, 10 µA typ.
Influence of ambient temperature	<±2 µA / K
Duration of measurement / Response delay	HART message acquisition time plus 100 ms
Relay	programmable either for fault or trip value (with direction, hysteresis and delay)
Electrical isolation	
Output I, II	functional insulation according to IEC 62103, rated insulation voltage $250V_{eff}$
Output I, II / other circuits	reinforced insulation according to IEC 62103, rated insulation voltage $300V_{rms}$
Output III, IV, V / power supply	functional insulation according to IEC 62103, rated insulation voltage $50V_{eff}$
Directive conformity	
Electromagnetic compatibility	
Directive 2004 / 108 / EC	EN 61326-1:2006
Low voltage	
Directive 2006 / 95 / EC	EN 50178:1997
Conformity	
Electromagnetic compatibility	NE 21:2006
Protection degree	IEC 60529:2001
Protection against electrical shock	IEC 60664-1

Environmental and Mechanical Specifications	
Operating temperature	-20...+60 °C (-4...+140 °F)
Protection degree	IP20
Weight	approx. 300 g
Dimensions	40 x 119 x 115 mm (1.6 x 4.7 x 4.5 in)
Mounting	on 35 mm DIN mounting rail according to EN 60715:2001
Data for application in connection with Ex-areas	
Group, category, type of protection	Ex II (1) GD [Ex ia] IIC, [Ex ia D]
Input	Ex ia IIC, Ex ia D
Supply	
Maximum safe voltage U_m	253V AC
Equipment	terminals 1, 4 / 3 (with link between terminals 4 and 5)
Voltage U_o	25.2V
Current I_o	104.9 mA
Power P_o	0.661 W
Equipment	terminals 2, 5 / 3
Voltage U_i	<28V
Power P_i	1.33 W
Voltage U_o	1.1V
Current I_o	11.9 mA
Power P_o	4 mW
Output I, II	terminals 10, 11, 12; 16, 17, 18, non-intrinsically safe
Maximum safe voltage U_m	253V
Contact loading	253V AC / 1 A / cos φ >0.7; 30V DC / 1 A resistive load
	50V AC / 1 A / cosφ >0.7; 30V DC / 1 A resistive load (self-declared)
Output III, IV, V	terminals 7, 8, 9; 13, 14, 15; 19, 20, 21, non-intrinsically safe
Maximum safe voltage U_m	253V
Electrical isolation	
Input / other circuits	safe electrical isolation according to IEC/EN 60079-11, voltage peak value 375V
Directive conformity	
Directive 94 / 9 / EC	EN 60079-0, EN 60079-11, EN 61241-0, EN 61241-11

937CU-AIHLP-DC1

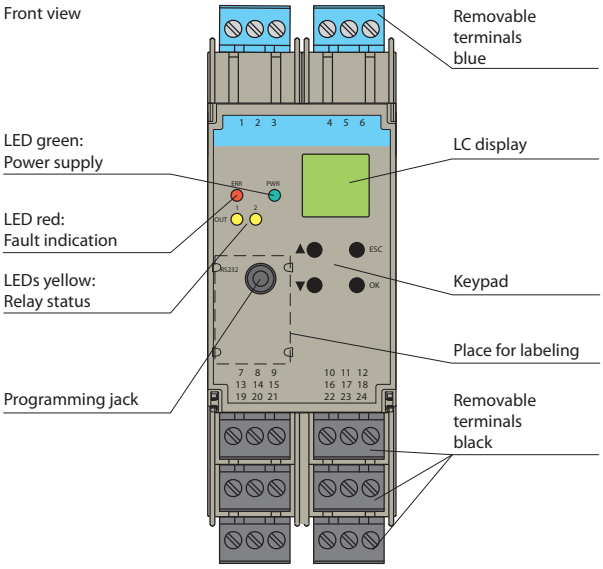

Product Features

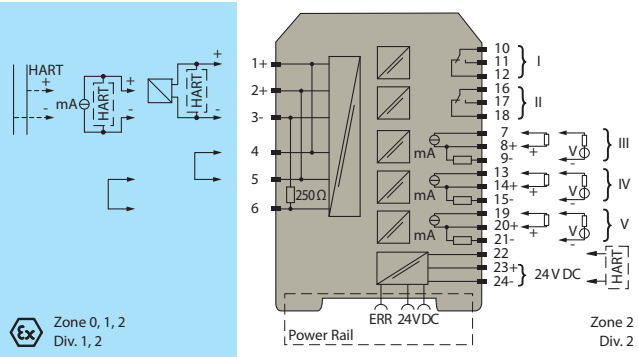

Wiring Diagram

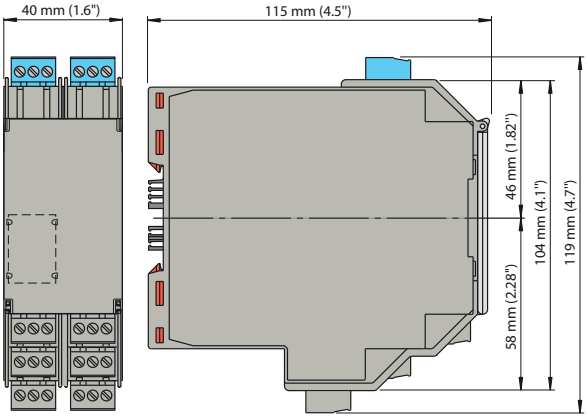

Approximate Dimensions

Strain Gauge Converter

1-ch, 24V DC

937CU-AISTR-DC1

- 1-channel isolated barrier
- 24V DC supply (Power Rail)
- Strain gauge input (full or half bridge)
- Output 0...±20 mA or 0...±10V
- Relay contact output
- Programmable high/low alarm
- Configurable by PACTware or keypad
- RS 485 interface
- Line fault detection (LFD)

This isolated barrier is used for intrinsic safety applications. The device is used with strain gauges, load cells and resistance measuring bridges. Designed to provide 5V excitation voltage, this barrier's high quality A/D converter allows it to be used with those devices requiring 10V. Up to four 350 Ω strain gauges connected in parallel may be powered and evaluated. The device is easily configured by the use of keypad or with the PACTware configuration software. The current measurement for tare, zero point, and final value can be entered in this manner. A fault is signalized by light-emitting diodes according to NAMUR NE44 and a separate collective error message output.

Description	24V DC, 1-channel
Signal type	Analog input
Supply	
Connection	Power Rail or terminals 23+, 24-
Rated voltage	20...35V DC
Ripple	within the supply tolerance
Power consumption	≤3 W
Interface	
Connection	Power Rail or terminals 19+, 20 GND, 21-
Type	RS 485
Programming interface	RS232, Programming adapter for parameterization via the USB interface of a PC / Notebook
Field circuit	
Connection	terminals 1+, 2-, 3+, 4-, 5+, 6-
Lead resistance	≤25 Ω per lead
Connection	terminals 1+, 2-
Sensor supply	1...5V
Connection	terminals 3+, 4- (supply); 5+, 6- (signal)
Short-circuit current	50 mA
Load	≥116 Ω up to 5V, ≥85 Ω up to 4V
Input	
Connection	Input I: terminals 1+, 2-; Input II: terminals 13+, 14-; Input III: terminals 15+, 14-
Programmable Tare	0...500% of span
Input I	signal, analog
Input signal	-100...100 mV
Input resistance	1 MΩ for voltage measurement
Input II, III	tare adjustment, calibration and zero
Open circuit voltage / short-circuit current	18V / 5 mA
Active / Passive	I >4 mA/ I <1.5 mA
Output	
Connection	Output I: terminals 10, 11, 12; Output II: terminals 16, 17, 18; Output III: terminals 7-, 8+, 9-
Output I, II	relay output
Contact loading	253V AC/2 A/500 VA/cos φ min. 0.7; 40V DC/2 A resistive load
Mechanical life	2×10^7 switching cycles
Output III	analog output
Current range	-20...20 mA
Load	≤550 Ω
Analog voltage output	0...±10V; output resistance 500 Ω (bridge between terminal 7 and 9)
Analog current output	0...±20 mA or 4...20 mA; load 0...550 Ω (terminals 7 and 8)
Line fault detection	downscale -21.5 mA (-10.75V) or 2 mA (1V), upscale 21.5 mA (10.75V)

937CU-AISTR-DC1

Transfer characteristics	
Deviation	
Resolution / accuracy	≤±0.05% incl. non-linearity and hysteresis
Temperature effect	≤±0.01% / K
Reaction time	300...850 ms
Electrical isolation	
Output I, II against each other	reinforced insulation according to IEC 61140, rated insulation voltage $300V_{eff}$
Output I, II / other circuits	reinforced insulation according to IEC 61140, rated insulation voltage $300V_{eff}$
Other circuits from each other	functional insulation, rated insulation voltage $50V_{eff}$
Directive conformity	
Electromagnetic compatibility	
Directive 2004 / 108 / EC	EN 61326-1:2006
Low voltage	
Directive 2006 / 95 / EC	EN 50178:1997
Conformity	
Electromagnetic compatibility	NE 21:2006
Protection degree	IEC 60529:2001
Protection against electrical shock	IEC 61140

Environmental and Mechanical Specifications	
Operating temperature	-20...+60 °C (-4...+140 °F)
Protection degree	IP20
Weight	approx. 250 g
Dimensions	40 x 119 x 115 mm (1.6 x 4.7 x 4.5 in)
Mounting	on 35 mm DIN mounting rail according to EN 60715:2001
Data for application in connection with Ex-areas	
Group, category, type of protection	Ex II (1) GD [Ex ia] IIC, [Ex ia D], [circuit(s) in zone 0/1/2]
Supply	Power Rail or terminals 23+, 24- non-intrinsically safe
Maximum safe voltage U_m	40V DC
Input I	terminals 1+, 2- Ex ia IIC, Ex ia D
Voltage U_0	14V
Current I_0	238 mA
Power P_0	833 mW (linear characteristic)
Input II and III	terminals 13+, 14-; 15+, 14- non-intrinsically safe
Maximum safe voltage U_m	40V DC
Output I, II	terminals 10, 11, 12; 16, 17, 18 non-intrinsically safe
Maximum safe voltage U_m	253V AC / 40V DC
Contact loading	253V AC / 2 A / 500VA / cos φ min. 0.7; 40V DC / 2 A resistive load
Output III	terminals 7-, 8+, 9- non-intrinsically safe
Maximum safe voltage U_m	40V DC
Interface	RS232, Programming adapter for parameterization via the USB interface of a PC/Notebook
Maximum safe voltage U_m	40V DC
Electrical isolation	
Input / other circuits	safe electrical isolation according to IEC/EN 60079-11, voltage peak value 375V
Directive conformity	
Directive 94 / 9 / EC	EN 60079-0:2006, EN 60079-11:2007, EN 60079-26:2007
	EN 61241-0:2006, EN 61241-11:2006

937CU-AISTR-DC1

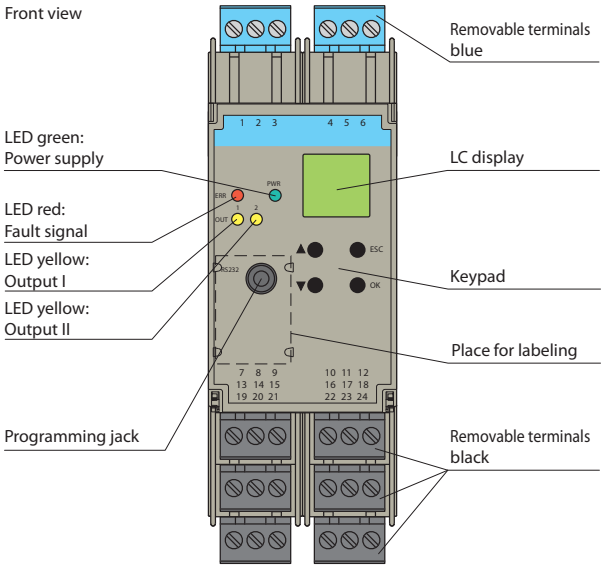

Product Features

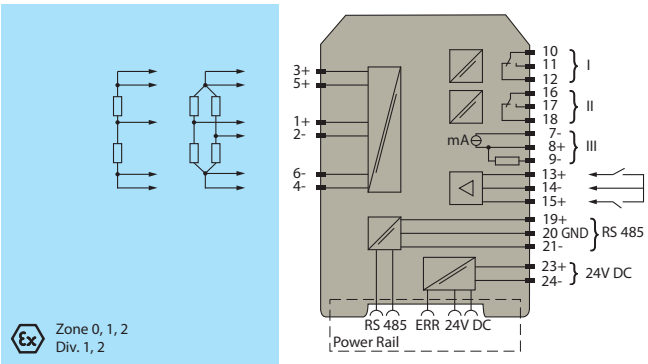

Wiring Diagram

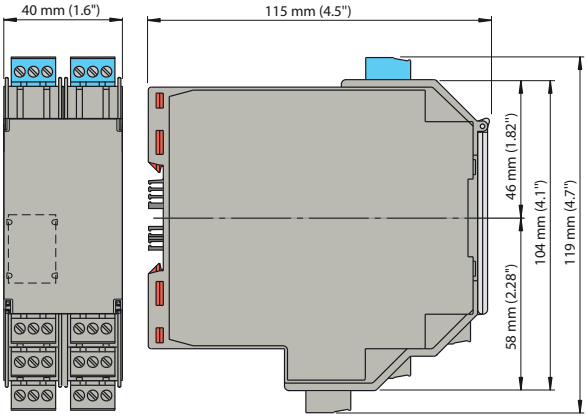

Approximate Dimensions

Zener Barriers

Zener barriers have long been a cost-effective solution for providing an intrinsically safe interface with field devices in the hazardous area. Allen-Bradley Zener barriers provide protection for electrical signals within hazardous areas and feature a narrow profile of just 12.5 mm (0.5 in) to maximize control panel space. Zener barrier prevents the transfer of unacceptably high energy from the safe area into the hazardous area. These Zener barriers have a positive polarity, which means the anodes of the Zener diodes are grounded. Depending on the application, increased or decreased intrinsic safety parameters apply for serial or parallel connection. These barriers simply snap onto a standard DIN rail for easy installation and grounding.

Zener barriers are available in the following types:

- Standard one- or two-channel barriers
- The diode return feature prevents a current into the hazardous area, therefore the current assumption for intrinsic safety calculations is zero
- In addition to the diode return feature, the high power version has a smaller serial resistance and therefore provides higher voltage to the field device

Catalog Number Explanation

Note: Examples given in this section are for reference purposes. This basic explanation should not be used for product selection; some combinations may not produce a valid catalog number.

937Z	H	-	DP	A	N	-	1
	a		b	c	d	-	e

a

Module Profile	
Code	**Description**
H	High-density 12.5 mm (0.5 in) module

b

Type	
Code	**Description**
DP	DC Positive Polarity

c

Max. Series Resistance	
Code	**Description**
A	646 Ω
B	327 Ω
C	36 Ω + 0.9V
D	250 Ω

d

Options	
Code	**Description**
D	Diode Return
P	Diode Return w / High Power
N	None

e

Channels	
Code	**Description**
1	Single Channel
2	Dual Channel

Zener Barrier

1-Ch, 327 Ω Max.

937ZH-DPBN-1

The Zener Barrier prevents the transfer of unacceptably high energy from the safe area into the hazardous area. The zener diodes in the Zener Barrier are connected in the reverse direction. The breakdown voltage of the diodes is not exceeded in normal operation. If this voltage is exceeded, due to a fault in the safe area, the diodes start to conduct, causing the fuse to blow. The Zener Barrier has a positive polarity, for example, the anodes of the zener diodes are grounded.

Signal type	DC positive polarity
Nominal resistance	300 Ω
Series resistance	Max 327 Ω
Fuse rating (non-replaceable)	50 mA
Hazardous area connection	terminals 1, 2
Safe area connection	terminals 7, 8
Working voltage	Max 26.9V, 26.5V at 10 µA
Data for application in connection with Ex-areas	
Group, category, type of protection	Ex II (1)GD, I (M1) [Ex ia Ga] IIC, [Ex ia Da] IIIC, [Ex ia Ma] I (-20 °C ≤T_{amb} ≤60 °C) [circuit(s) in zone 0 / 1 / 2]
Voltage	28V
Current	93 mA
Power	650 mW
Supply	
Maximum safe voltage	250 V
Series resistance	min. 301 Ω
Group, category, type of protection, temperature class	Ex II 3G Ex nA IIC T4 Gc [device in zone 2]
Directive conformity	
Directive 94 / 9 / EC	EN 60079-0:2009, EN 60079-11:2007, EN 61241-11:2006, EN 60079-15:2010
Operating temperature	-20...+60 °C (-4...+140 °F)
Storage temperature	-25...70 °C (-13...158 °F)
Relative humidity	Max 75%, without moisture condensation
Degree of protection	IP20
Connection	self-opening connection terminals, Max core cross-section 2 x 2.5 mm^2
Weight	approx. 150 g (0.33 lb)
Dimensions	12.5 x 115 x 110 mm (0.5 x 4.5 x 4.3 in)
Mounting	on 35 mm DIN mounting rail according to EN 60715:2001

937ZH-DPBN-1

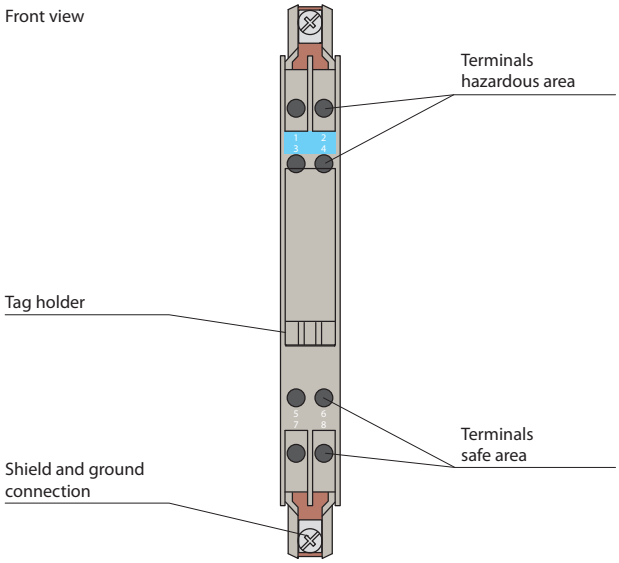

Product Features

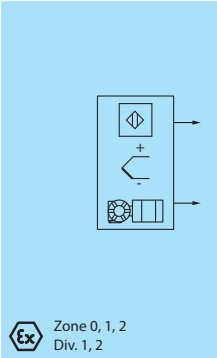

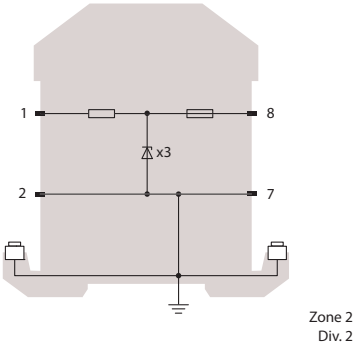

Wiring Diagram

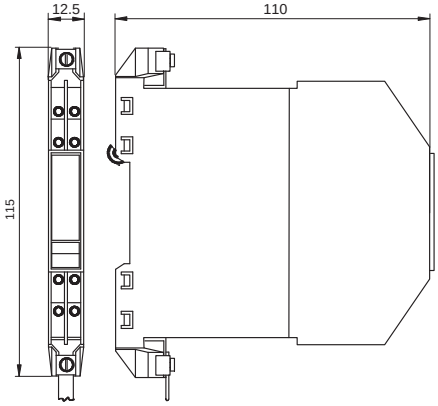

Approximate Dimensions

Zener Barrier

2-Ch, 327 Ω Max.

937ZH-DPBN-2

The Zener Barrier prevents the transfer of unacceptably high energy from the safe area into the hazardous area. The zener diodes in the Zener Barrier are connected in the reverse direction. The breakdown voltage of the diodes is not exceeded in normal operation. If this voltage is exceeded, due to a fault in the safe area, the diodes start to conduct, causing the fuse to blow. The Zener Barrier has a positive polarity, for example, the anodes of the zener diodes are grounded. Depending on the application, increased or decreased intrinsic safety parameters apply for serial or parallel connection. For the detailed parameters refer to the Zener Barrier certificate.

Signal type	DC positive polarity
Nominal resistance	300 Ω
Series resistance	Max 327 Ω
Fuse rating (non-replaceable)	50 mA
Hazardous area connection	terminals 1, 2; 3, 4
Safe area connection	terminals 5, 6; 7, 8
Working voltage	Max 27V, 26.5V at 10 µA
Data for application in connection with Ex-areas	
Group, category, type of protection	Ex II (1)GD, I (M1) [Ex ia Ga] IIC, [Ex ia Da] IIIC, [Ex ia Ma] I (-20 °C ≤T_{amb} ≤60 °C) [circuit(s) in zone 0 / 1 / 2]
Voltage	28V
Current	93 mA
Power	650 mW
Supply	
Maximum safe voltage	250V
Series resistance	min. 301 Ω
Group, category, type of protection, temperature class	Ex II 3G Ex nA IIC T4 Gc [device in zone 2]
Directive conformity	
Directive 94 / 9 / EC	EN 60079-0:2009, EN 60079-11:2007, EN 61241-11:2006, EN 60079-15:2010
Operating temperature	-20...+60 °C (-4...+140 °F)
Storage temperature	-25...70 °C (-13...158 °F)
Relative humidity	Max 75%, without moisture condensation
Degree of protection	IP20
Connection	self-opening connection terminals, Max core cross-section 2 x 2.5 mm^2
Weight	approx. 150 g (0.33 lb)
Dimensions	12.5 x 115 x 110 mm (0.5 x 4.5 x 4.3 in)
Mounting	on 35 mm DIN mounting rail according to EN 60715:2001

937ZH-DPBN-2

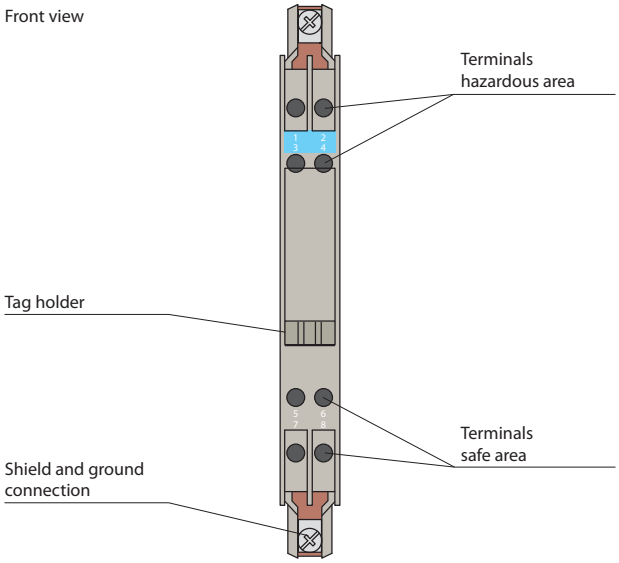

Product Features

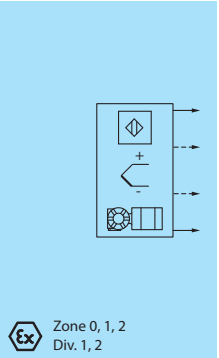

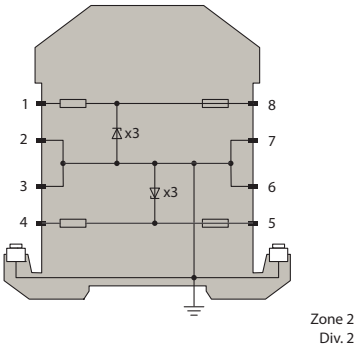

Wiring Diagram

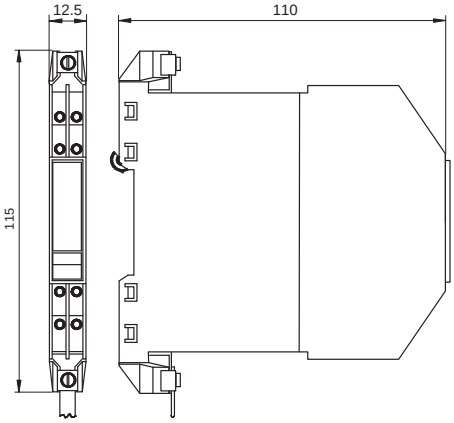

Approximate Dimensions

Zener Barrier

2-Ch, 646 Ω Max.

937ZH-DPAN-2

The Zener Barrier prevents the transfer of unacceptably high energy from the safe area into the hazardous area. The zener diodes in the Zener Barrier are connected in the reverse direction. The breakdown voltage of the diodes is not exceeded in normal operation. If this voltage is exceeded, due to a fault in the safe area, the diodes start to conduct, causing the fuse to blow. The Zener Barrier has a positive polarity, for example the anodes of the zener diodes are grounded. Depending on the application, increased or decreased intrinsic safety parameters apply for serial or parallel connection. For the detailed parameters refer to the Zener Barrier certificate.

Signal type	DC positive polarity
Nominal resistance	600 Ω
Series resistance	Max 646 Ω
Fuse rating (non-replaceable)	50 mA
Hazardous area connection	terminals 1, 2; 3, 4
Safe area connection	terminals 5, 6; 7, 8
Working voltage	Max 27V, 26.5V at 10 µA
Data for application in connection with Ex-areas	
Group, category, type of protection	Ex II (1)GD, I (M1) [Ex ia Ga] IIC, [Ex ia Da] IIIC, [Ex ia Ma] I (-20 °C ≤T_{amb} ≤60 °C) [circuit(s) in zone 0 / 1 / 2]
Voltage	28V
Current	46 mA
Power	320 mW
Supply	
Maximum safe voltage	250V
Series resistance	min. 607 Ω
Group, category, type of protection, temperature class	Ex II 3G Ex nA IIC T4 Gc [device in zone 2]
Directive conformity	
Directive 94 / 9 / EC	EN 60079-0:2009, EN 60079-11:2007, EN 61241-11:2006, EN 60079-15:2010
Operating temperature	-20...+60 °C (-4...+140 °F)
Storage temperature	-25...70 °C (-13...158 °F)
Relative humidity	Max 75%, without moisture condensation
Degree of protection	IP20
Connection	self-opening connection terminals, Max core cross-section 2 x 2.5 mm^2
Weight	approx. 150 g (0.33 lb)
Dimensions	12.5 x 115 x 110 mm (0.5 x 4.5 x 4.3 in)
Mounting	on 35 mm DIN mounting rail according to EN 60715:2001

937ZH-DPAN-2

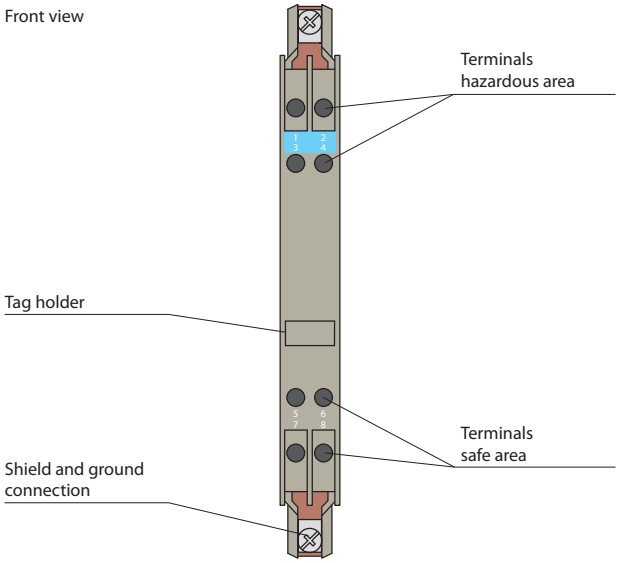

Product Features

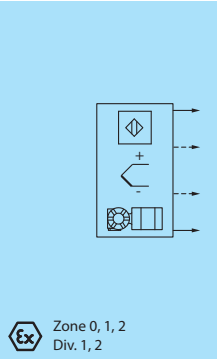

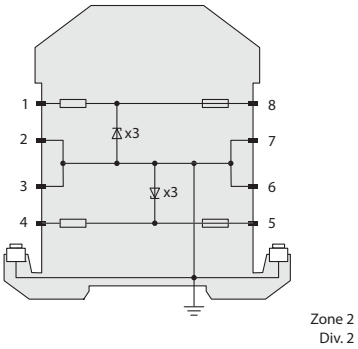

Wiring Diagram

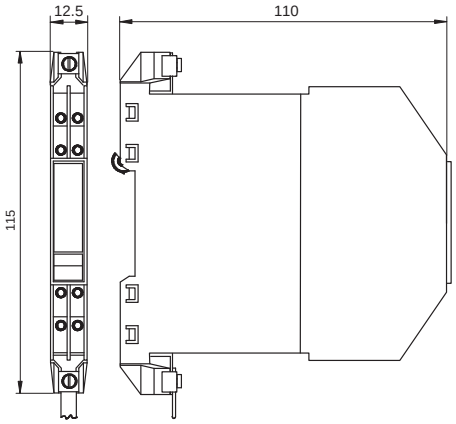

Approximate Dimensions

Zener Barrier

2-Ch, 36 Ω + 0.9V Max

937ZH-DPCD-2

The Zener Barrier prevents the transfer of unacceptably high energy from the safe area into the hazardous area. The zener diodes in the Zener Barrier are connected in the reverse direction. The breakdown voltage of the diodes is not exceeded in normal operation. If this voltage is exceeded, due to a fault in the safe area, the diodes start to conduct, causing the fuse to blow. The Zener Barrier has a positive polarity, for example, the anodes of the zener diodes are grounded.

The Zener Barrier is for evaluation of signals from the hazardous area. The diodes of diode return prevent a current into the hazardous area, therefore the current assumption for intrinsic safety calculations is zero. Depending on the application, increased or decreased intrinsic safety parameters apply for serial or parallel connection. For the detailed parameters refer to the Zener Barrier certificate. Application examples can be found in the system description of the Zener Barriers.

Signal type	DC positive polarity
Nominal resistance	diode
Series resistance	Max 36 Ω + 0.9V
Voltage drop	1.2V + (36 Ω x signal current)
Fuse rating (non-replaceable)	50 mA
Hazardous area connection	terminals 1, 2; 3, 4
Safe area connection	terminals 5, 6; 7, 8
Working voltage	Max 27V, 26.5V at 10 µA
Data for application in connection with Ex-areas	
Voltage U_0	28V
Supply	
Maximum safe voltage U_m	250V
Series resistance	diode
Group, category, type of protection, temperature class	
Directive conformity	directive 94 / 9 / EC
Operating temperature	-20...+60 °C (-4...+140 °F)
Storage temperature	-25...70 °C (-13...158 °F)
Relative humidity	Max 75%, without moisture condensation
Degree of protection	IP20
Connection	self-opening connection terminals, Max core cross-section 2 x 2.5 mm^2
Weight	approx. 150 g (0.33 lb)
Dimensions	12.5 x 115 x 110 mm (0.5 x 4.5 x 4.3 in)
Mounting	on 35 mm DIN mounting rail according to EN 60715:2001

937ZH-DPCD-2

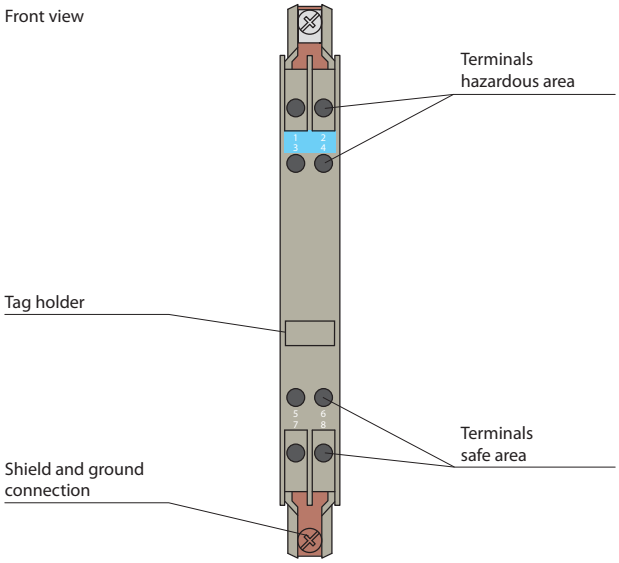

Product Features

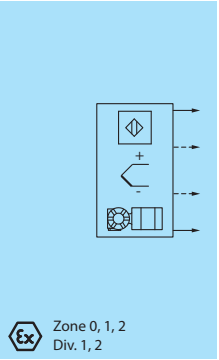

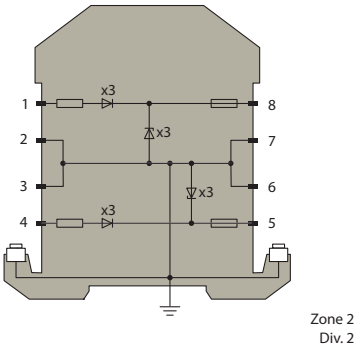

Wiring Diagram

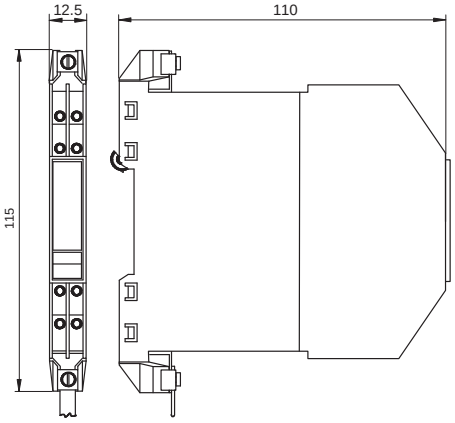

Approximate Dimensions

Zener Barrier

2-Ch, 250 Ω Max

937ZH-DPDP-2

The Zener Barrier prevents the transfer of unacceptably high energy from the safe area into the hazardous area. The zener diodes in the Zener Barrier are connected in the reverse direction. The breakdown voltage of the diodes is not exceeded in normal operation. If this voltage is exceeded, due to a fault in the safe area, the diodes start to conduct, causing the fuse to blow. The Zener Barrier has a positive polarity, for example, the anodes of the zener diodes are grounded.

This high power version has a smaller serial resistance and therefore provides higher voltage to the field device. The Zener Barrier is for evaluation of signals from the hazardous area. The diodes of diode return prevent a current into the hazardous area, therefore the current assumption for intrinsic safety calculations is zero. Depending on the application, increased or decreased intrinsic safety parameters apply for serial or parallel connection. For the detailed parameters refer to the Zener Barrier certificate. Application examples can be found in the system description of the Zener Barriers.

Signal type	DC positive polarity
Nominal resistance	240 Ω
Series resistance	Max 250 Ω
Fuse rating (non-replaceable)	80 mA
Hazardous area connection	terminals 1, 2; 3, 4
Safe area connection	terminals 5, 6; 7, 8
Working voltage	Max 27V, 26.5V at 10 µA
Data for application in connection with Ex-areas	
Group, category, type of protection	Ex II (1)GD, I (M1) [Ex ia Ga] IIC, [Ex ia Da] IIIC, [Ex ia Ma] I (-20 °C ≤T_{amb} ≤60 °C) [circuit(s) in zone 0 / 1 / 2]
Voltage U_0	28V
Current I_0	120 mA
Power P_0	830 mW
Supply	
Maximum safe voltage U_m	250V
Series resistance	min. 235 Ω
Statement of conformity	TÜV 99 ATEX 1484 X , observe statement of conformity
	Group, category, type of protection, temperature class
Directive conformity	
Directive 94 / 9 / EC	EN 60079-0:2009, EN 60079-11:2007, EN 61241-11:2006, EN 60079-15:2010
Operating temperature	-20...+60 °C (-4...+140 °F)
Storage temperature	-25...70 °C (-13...158 °F)
Relative humidity	Max 75%, without moisture condensation
Degree of protection	IP20
Connection	self-opening connection terminals, Max core cross-section 2 x 2.5 mm^2
Weight	approx. 150 g (0.33 lb)
Dimensions	12.5 x 115 x 110 mm (0.5 x 4.5 x 4.3 in)
Mounting	on 35 mm DIN mounting rail according to EN 60715:2001

937ZH-DPDP-2

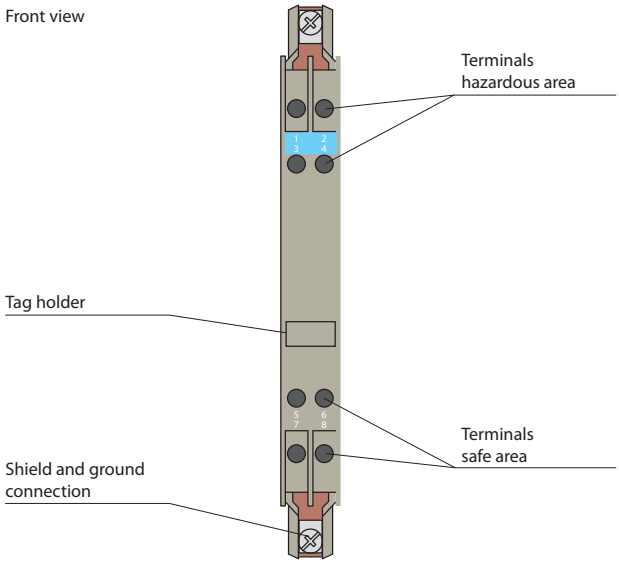

Product Features

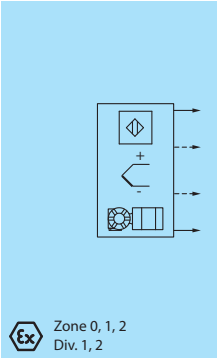

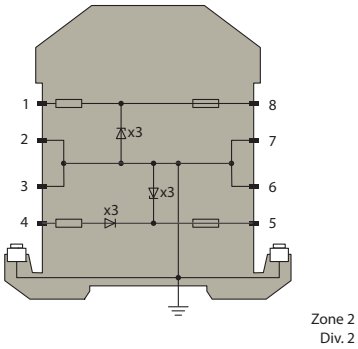

Wiring Diagram

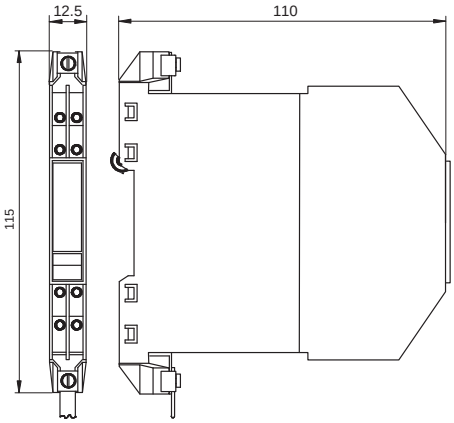

Approximate Dimensions

Accessories

IMPORTANT The accessories listed are for use with Bulletin 937 Intrinsic Safety Isolated Barriers and Converter Barriers.

Power Feed Module

24V DC

937A-PSFD

- Interface for Power Rail
- Used for redundant configuration
- Supply rating 4 A, external fused
- Relay contact output, reversible
- Status indicator status indication

The power feed module is used to supply the devices with 24V DC via the Power Rail. The fuse-protected power feed module can supply up to 150 individual modules depending on the power consumption of the devices. Collective error messages received from the Power Rail activate a galvanically-isolated mechanical contact.

Description	Redundant power feed module
Supply	
Connection	terminals 11+, 12-
	terminals 8+, 9-
Rated voltage	20...30 V DC
	The maximum rated operating voltage of the devices plugged onto the Power Rail must not be exceeded.
Power loss	≤2.4 W
Output	
Power Rail feed	output current ≤4 A
Fault signal	relay output: NO contact
Contact loading	30V AC / 2 A / cos φ ≥0.7; 40V DC / 2 A
Energized / de-energized delay	approx. 20 ms / approx. 20 ms
Fusing	5 AT
Conformity	
Electromagnetic compatibility	NE 21:2006
Protection degree	IEC 60529:2001
Environmental and Mechanical Specifications	
Operating temperature	-25...60 °C (-13...140 °F)
Degree of protection	IP20
Weight	approx. 100 g (0.22 lb)
Dimensions	20 x 119 x 115 mm (0.8 x 4.7 x 4.5 in)
Mounting	on 35 mm DIN mounting rail according to EN 60715:2001
Data for application in connection with Ex-areas	
Group, category, type of protection, temperature class	Ex II 3G Ex nA nC IIC T4
Directive conformity	
Directive 94 / 9 / EC	EN 60079-0:2009, EN 60079-15:2010

937A-PSFD

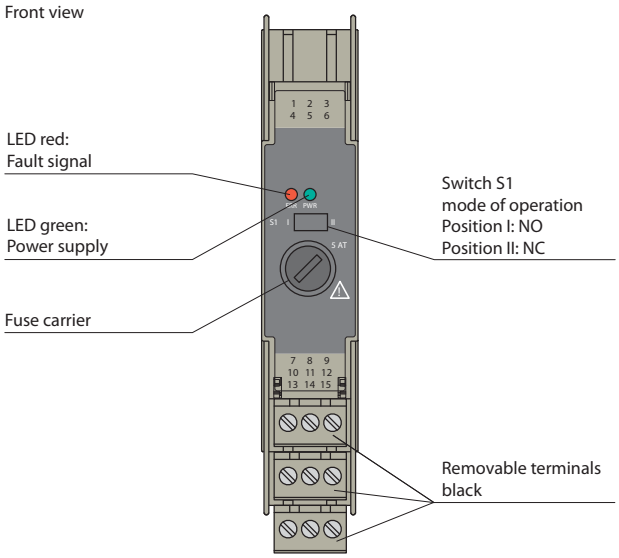

Product Features

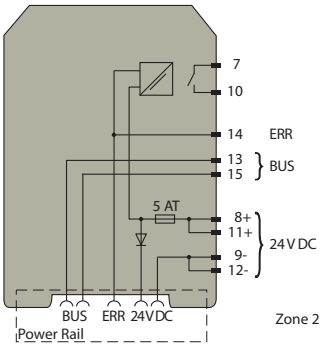

Wiring Diagram

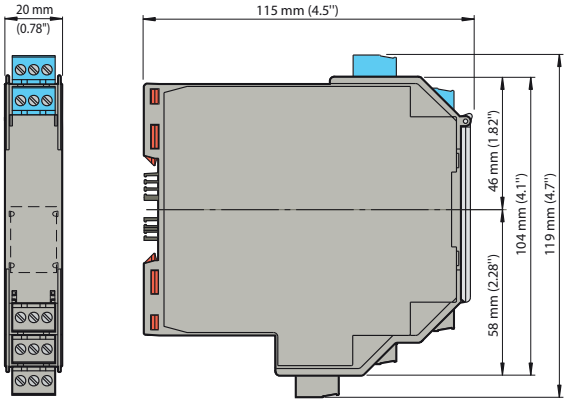

Approximate Dimensions

Power Rail

937A-PR08, 937A-PR20

The power rail has two conductors for 24V DC power and one conductor for collective error messaging. The rail reduces wiring and maintenance costs because it eliminates the need to daisy-chain wires. It also simplifies expansion – just snap in a new Isolated barrier or Converter barrier when you're ready to expand a system. The rail is available in 2 meter or 0.8 meter lengths and can be cut to size per application needs. The power rail comes standard with two end caps and a cover. Additional end caps can be ordered separately.

- 35 mm DIN mounting rail with 3-conductor insert
- Provides DC supply voltage to equipped intrinsic safety modules
- Simple to customize to application space
- Eliminates daisy-chains
- Available in 0.8 m and 2 m lengths

Cat. No.	937A-PR08	937A-PR20	937A-PREC
Description	Power Rail – Pkg. Qty. 1, 0.8 m length	Power Rail – Pkg. Qty. 1, 2 m length	Power Rail End Cap – Pkg. Qty. 10
Electrical specifications			
Rated voltage	24V DC		–
Rated current	4 A		–
Environmental specifications			
Operating temperature	-20...+60 °C (-4...+140 °F)		
Dimensions	35 x 15 x 800 mm (1.4 x 0.6 x 31.5 in)	35 x 15 x 2000 mm (1.4 x 0.6 x 78.7 in)	17 x 37 x 24 mm (0.67 x 1.46 x 0.95 in)

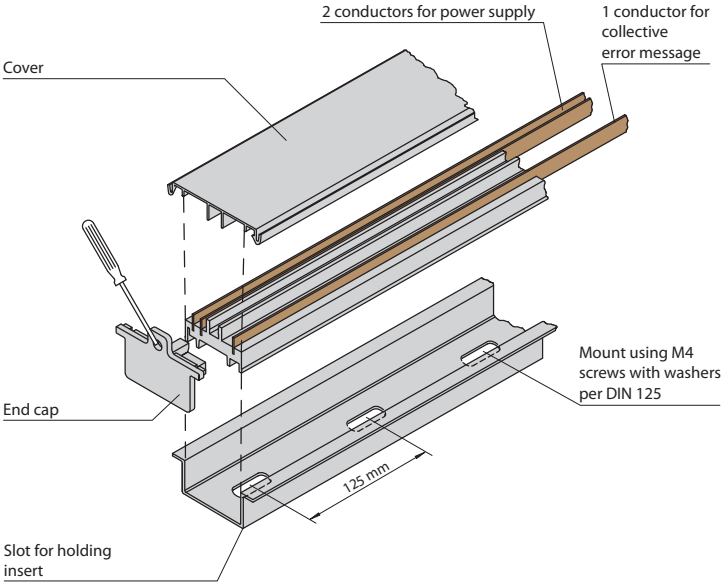

Product Features

USB Interface Cable

937A-USBA

- Isolated USB Interface cable for the Converter barriers
- For use with FDT configuration software

This programming cable is used to configure 937C Converter Barriers with FDT software via USB port on a computer.

FDT Interface

Configuring converter modules is convenient using the Field Device Tool (FDT) software. Some specialized functions can only be selected using the FDT. The FDT interface is the specification describing the standardized data exchange between devices and control system or engineering or asset management tools. Examples include: PACTware™, FieldCare, FactoryTalk® AssetCentre, and Process Device Configuration. FDT frame software can be downloaded at http://www.pactware.com

Electrical specifications	
Current consumption	50 mA (via USB)
Electrical isolation	functional insulation according to IEC 62103, rated insulation voltage $50V_{eff}$
Environmental and Mechanical Specifications	
Operating Temperature	-20...+60 °C (-4...+140 °F)
Connection to the PC	USB type A
Cable Length	3 m

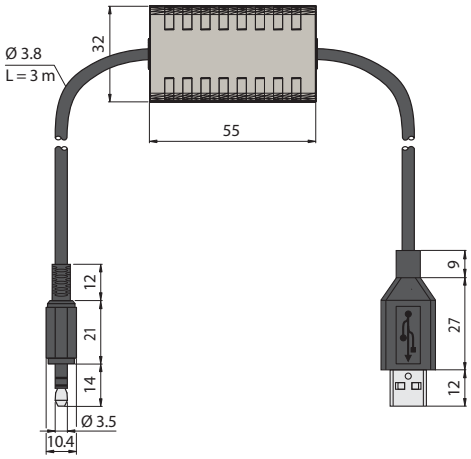

Approximate Dimensions

Cold Junction Compensation Device

937A-TCJC

Description		Cat. No.
Cold junction compensation for 937CS-AITMP-DC1 (thermocouples)	Pkg. Qty. 1	937A-TCJC

Notes:

Additional Resources

These documents contain additional information concerning related products from Rockwell Automation.

Resource	Description
Isolated and Converter Barriers Technical Data, publication 937-TD002	Provides safety considerations, installation types, operation modes, specifications and approximate dimensions for Bulletin 937T and 937C products.
EtherNet/IP Network Devices User Manual, ENET-UM006	Describes how to configure and use EtherNet/IP devices to communicate on the EtherNet/IP network.
Ethernet Reference Manual, ENET-RM002	Describes basic Ethernet concepts, infrastructure components, and infrastructure features.
System Security Design Guidelines Reference Manual, SECURE-RM001	Provides guidance on how to conduct security assessments, implement Rockwell Automation products in a secure system, harden the control system, manage user access, and dispose of equipment.
Industrial Components Preventive Maintenance, Enclosures, and Contact Ratings Specifications, publication IC-TD002	Provides a quick reference tool for Allen-Bradley industrial automation controls and assemblies.
Safety Guidelines for the Application, Installation, and Maintenance of Solid-state Control, publication SGI-1.1	Designed to harmonize with NEMA Standards Publication No. ICS 1.1-1987 and provides general guidelines for the application, installation, and maintenance of solid-state control in the form of individual devices or packaged assemblies incorporating solid-state components.
Industrial Automation Wiring and Grounding Guidelines, publication 1770-4.1	Provides general guidelines for installing a Rockwell Automation industrial system.
Product Certifications website, rok.auto/certifications.	Provides declarations of conformity, certificates, and other certification details.

You can view or download publications at rok.auto/literature.

Rockwell Automation Support

Use these resources to access support information.

Technical Support Center	Find help with how-to videos, FAQs, chat, user forums, and product notification updates.	rok.auto/support
Knowledgebase	Access Knowledgebase articles.	rok.auto/knowledgebase
Local Technical Support Phone Numbers	Locate the telephone number for your country.	rok.auto/phonesupport
Literature Library	Find installation instructions, manuals, brochures, and technical data publications.	rok.auto/literature
Product Compatibility and Download Center (PCDC)	Download firmware, associated files (such as AOP, EDS, and DTM), and access product release notes.	rok.auto/pcdc

Documentation Feedback

Your comments help us serve your documentation needs better. If you have any suggestions on how to improve our content, complete the form at rok.auto/docfeedback.

Allen-Bradley, expanding human possibility, FactoryTalk, and Rockwell Automation are trademarks of Rockwell Automation, Inc.
EtherNet/IP is a trademark of ODVA, Inc.
Trademarks not belonging to Rockwell Automation are property of their respective companies.

Rockwell Automation maintains current product environmental compliance information on its website at rok.auto/pec.

Rockwell Otomasyon Ticaret A.Ş. Kar Plaza İş Merkezi E Blok Kat:6 34752, İçerenköy, İstanbul, Tel: +90 (216) 5698400 EEE Yönetmeliğine Uygundur

Connect with us.

rockwellautomation.com — expanding **human possibility**™

AMERICAS: Rockwell Automation, 1201 South Second Street, Milwaukee, WI 53204-2496 USA, Tel: (1) 414.382.2000, Fax: (1) 414.382.4444
EUROPE/MIDDLE EAST/AFRICA: Rockwell Automation NV, Pegasus Park, De Kleetlaan 12a, 1831 Diegem, Belgium, Tel: (32) 2 663 0600, Fax: (32) 2 663 0640
ASIA PACIFIC: Rockwell Automation, Level 14, Core F, Cyberport 3, 100 Cyberport Road, Hong Kong, Tel: (852) 2887 4788, Fax: (852) 2508 1846

Publication 937-SG001F-EN-P - May 2021
Supersedes Publication 937-SG001E-EN-P - October 2020

Copyright © 2021 Rockwell Automation, Inc. All rights reserved. Printed in the U.S.A.