Technical Data

Original Instructions

Signaling Specifications

Bulletin Numbers 854J, 854K, 855B, 855BS/BM/BL, 855D, 855E, 855F, 855H/HM, 855L, 855P, 855T, 855W, 855X/XM, 856T

Topic	Page
Summary of Changes	2
Bulletin 855P – Panel-mount Signaling Alarms	3
Bulletin 855L – Panel Light Bars	9
Bulletin 855H – General-purpose Electronic Horns	11
Bulletin 855H – High-performance Electronic Horns	12
Bulletin 855H – Recordable Electronic Horns	19
Bulletin 855HM – High-performance Electronic Metal Horns	23
Bulletin 855B – Mini Square Beacons	28
Bulletin 855B – Industrial Round Beacons	30
Bulletin 855D – 30 mm Compact Control Tower Stack Lights	39

Topic	Page
Bulletin 855F – 70 mm Compact Control Tower Stack Lights	44
Bulletin 854J – 40 mm Control Tower Stack Lights	49
Bulletin 854K – 60 mm Control Tower Stack Lights	58
Bulletin 855E – 50 mm Control Tower Stack Lights	67
Bulletin 855T – 70 mm Control Tower Stack Lights	75
Bulletin 856T – 70 mm Control Tower Stack Lights	89
Bulletin 855W – Wall-mount Signal Light	101
Bulletin 855X – Hazardous Location Horns, Beacons, and Combination Units	105
Bulletin 855XM – Hazardous Location Metal Horns	113
Additional Resources	121

Our signaling devices are available in two types:

- Audible Devices
  Including general and high-performance electronic horns, panel mount signaling alarms, and hazardous location horns and beacons.
- Visual Devices
  Including panel mount xenon strobes, mini square beacons, panel-mount with selectable steady or flashing light indicators, wall-mount signal lights, panel light bars, industrial round beacons, tower lights, stack lights, and panel-mount dual circuit alarms.

Our signaling devices are designed for fast, flexible, and easy installation to save you time with advanced modular assembly and unparalleled performance and reliability.

Allen Bradley 855H-BD30CD | gesrepair.com

Summary of Changes

This publication contains the following new or updated information. This list includes substantive updates only and is not intended to reflect all changes.

Topic	Page
Added recordable sounder to Sound Modules section.	90
Added IO-Link Module section.	91
Updated Pre-configured Control Tower Lights, 1...7 Modules section.	93
Updated Table 125.	94
Updated Table 127.	95
Updated Table 128.	95
Added Table 129.	95
Updated Table 131.	96
Updated Table 132.	97
Updated Table 133.	97
Added Figure 15.	99
Added recordable sound module to Figure 17.	100

This product line includes sounders, status indicator beacons, xenon strobes, and sounders with status indicator combination and dual-circuit alarms. These alarms significantly reduce panel space requirements and installation time. Our panel-mount alarms are rear-securing and fingersafe, which adds a high level of environmental integrity to your panel.

Bulletin 855P — Panel-mount Sounder

30 mm Panel-mount Sounder

45 mm Panel-mount Sounder

65 mm Panel-mount Sounder

855P	-	B	10	ME	22
		a	b	c	d

a	
Housing Color	
Code	Description
B	Black

b	
Voltage	
Code	Description
30	12...24V AC/DC
10	120V AC
20	240V AC

c	
Size	
Code	Description
SE	30 mm, fully enclosed, smooth front, 72 dB
SH	30 mm, high output, 80 dB
ME	45 mm
LE	65 mm

d	
Mounting Hole	
Code	Description
22	22.5 mm

Bulletin 855PC — Panel-mount Combined Sounder with LED Beacon

45 mm Panel-mount Combined Sounder with LED (Light-emitting Diode) Beacon

65 mm Panel-mount Combined Sounder with LED Beacon

855PC	-	B	10	ME	3	22
		a	b	c	d	e

a	
Housing Color	
Code	Description
B	Black

b	
Voltage	
Code	Description
12	12V AC/DC
24	24V AC/DC
10	120V AC
20	240V AC

c	
Size	
Code	Description
ME	45 mm
LE	65 mm

d	
Lens Color	
Code	Description
3	Green
4	Red
5	Amber
6	Blue
7	Clear
8	Yellow

e	
Mounting Hole	
Code	Description
22	22.5 mm

Bulletin 855PS — Panel-mount Strobe

30 mm Panel-mount Strobe

45 mm Panel-mount Strobe

65 mm Panel-mount Strobe

855PS	-	B	10	ME	3	22
		a	b	c	d	e

a	
Housing Color	
Code	**Description**
B	Black

b	
Voltage	
Code	**Description**
12	12V AC/DC
24	24V AC/DC
10	120V AC
20	240V AC
30	12...24V AC/DC

c	
Size	
Code	**Description**
SE	30 mm (1) (2)
ME	45 mm (3) (4)
LE	65 mm (3) (4)

d	
Lens Color	
Code	**Description**
3	Green
4	Red
5	Amber
6	Blue
7	Clear
8	Yellow

e	
Mounting Hole	
Code	**Description**
22	22.5 mm

(1) 30 mm units are LED type.
(2) Only available in 12V AC/DC, 24V AC/DC, 120V AC, or 240V AC.
(3) 45 mm and 65 mm units are Xenon strobe.
(4) Only available in 12...24V AC/DC, 120V, or 240V AC.

Bulletin 855PB — Panel-mount Selectable Steady or Flashing LED Beacon

30 mm Panel-mount LED Beacon

45 mm Panel-mount LED Beacon

65 mm Panel-mount LED Beacon

855PB	-	B	10	ME	3	22
		a	b	c	d	e

a	
Housing Color	
Code	**Description**
B	Black

b	
Voltage	
Code	**Description**
12	12V AC/DC
24	24V AC/DC
10	120V AC
20	240V AC

c	
Size	
Code	**Description**
SE	30 mm
ME	45 mm
LE	65 mm

d	
Lens Color	
Code	**Description**
3	Green
4	Red
5	Amber
6	Blue
7	Clear
8	Yellow

e	
Mounting Hole	
Code	**Description**
22	22.5 mm

Bulletin 855PD — Panel-mount Dual-circuit Alarms

Half-lens Illumination

Full-lens Illumination

Combined Sounder with LED Beacon

855PD	-	B	24	ME	F	3	4	22
		a	b	c	d	e	f	g

a	
Housing Color	
Code	**Description**
B	Black

b	
Voltage	
Code	**Description**
12 (1)	12V AC/DC
24	24V AC/DC
10	120V AC
20	240V AC

c	
Size	
Code	**Description**
SE	30 mm (2) (3)
ME	45 mm
LE	65 mm

d	
Function	
Code	**Description**
F	Two-color, full-lens illumination
H	Two-color, half-lens illumination with barrier
C	Combined sounder with LED beacon (3)

(1) Voltage code 12 is only valid for sounder with LED devices.
(2) 30 mm available in 24V AC/DC only, for 2-color versions.
(3) The sounder with LED is not available in the 30 mm size.

e	
LED Color (1)/Sound	
Code	**Description**
1	Sound
3	Green
4	Red
5	Amber
6	Blue
7	Clear
8	Yellow

f	
LED Color (2)	
Code	**Description**
3	Green
4	Red
5	Amber (3)
6	Blue
7	Clear
8	Yellow (3)

g	
Mounting Hole	
Code	**Description**
22	22.5 mm

(1) Voltage code 12 is only valid for sounder with LED devices.
(2) For two-color devices, the first color code listed in the catalog number corresponds to the same side as the panel tab found on the housing. For example: catalog number 855PD-B24MEH4322 indicates that the red color is on the same side as the panel tab and the green color is on the opposite side as the panel tab.
(3) The color combination of yellow and amber is not allowed because of their similarity

Accessories

Description	Cat. No.
22.5...30.5 mm hole adapter kit	855P-AHA1

Specifications

Table 1 - Standards and Certifications

Attribute	Bulletin 855P
Standards Compliance	• EN/IEC 60947-1 • EN/IEC 60947-5-1 • UL 508 • CSA C22.2 No. 14
Certifications	• c-UL-us Listed (File No. E14840, Guides NKCR, NKCR7) • CE Marked

Panel Sounder and Single-/Dual-circuit Panel Sounder with LED

Table 2 - Technical

Attribute		Bulletin 855P
Housing	Base Material	Polycarbonate, black
	Lens	Polycarbonate, red, amber, yellow, green, blue, and clear
Protection class		UL Type 4/4X/13, IP65
Terminals		Plug-in terminal block, up to 2.5 mm^2 (14 AWG), IP2X
Operation temperature range		-25...+60 °C (-13...+140 °F)
Storage temperature range		-25...+85 °C (-13...+185 °F)
Mounting		Central mounting for bore holes 22 mm or 30.5 mm with hole adapter kit (catalog number 855P-AHA1)
Mounting nut torque		1.7 N•m (15 lb•in)

Table 3 - Electrical

Attribute		Sounder			Sounder with Warning Light	
		65 mm	45 mm	30 mm	65 mm	45 mm
Supply voltage range	12V AC/DC - 50/60 Hz	—	—	—	±10%	±10%
	24V AC/DC - 50/60 Hz	—	—	—	±10%	±10%
	12...24V AC/DC - 50/60 Hz	8...26V AC/DC	8...26V AC/DC	10...26V AC/DC	—	—
	120V AC - 50/60 Hz	50...140V AC	50...140V AC	80...140V AC	±10%	±10%
	230/240V AC - 50/60 Hz	150...260V AC	150...260V AC	180...260V AC	±10%	±10%
Nominal current — single circuit (dual circuit)	12V AC/DC - 50/60 Hz	—	—	—	50 mA (62 mA)	35 mA (48 mA)
	24V AC/DC - 50/60 Hz	57 mA	20 mA	20 mA	73 mA (95 mA)	58 mA (73 mA)
	120V AC - 50/60 Hz	40 mA	40 mA	20 mA	60 mA (52 mA)	40 mA (51 mA)
	230/240V AC - 50/60 Hz	42 mA	42 mA	20 mA	63 mA (52 mA)	42 mA (51 mA)
Turn-on leakage current		≥3 mA	≥3 mA	≥3 mA	≥3 mA	≥3 mA
Sound level, max (average)		105 dB(A) @ 1 m (3.3 ft)	100 dB(A) @ 1 m (3.3 ft)	SE: 72 dB(A) @ 1 m (3.3 ft) SH: 80 dB(A) @ 1 m (3.3 ft)	103 dB(A) @ 1 m (3.3 ft)	98 dB(A) @ 1 m (3.3 ft)
Sound level, min		< 85 dB	< 85 dB	—	< 85 dB	< 85 dB
Sound level adjustment		Stepless	Stepless	—	Stepless	Stepless
Sound main frequency		3300 Hz	3300 Hz	3500 Hz	3300 Hz	3300 Hz
Sound types	Continuous	Yes	Yes	Yes	Yes	Yes
	Pulsing(1)	Yes	Yes	Yes	Yes	Yes
	Alternating frequency(1)	Yes	No	No	Yes	No
Sound selection		Externally by terminal connection				
Weight		65 g (2.3 oz)	35 g (1.2 oz)	25 g (0.9 oz)	85 g (3 oz)	55 g (1.9 oz)

(1) Single circuit only.

Panel Strobe and Single/Two Color LED Lights

Table 4 - Technical

Attribute		Bulletin 855P
Housing	Base material	Polycarbonate, black
	Lens	Polycarbonate, red, amber, yellow, green, blue, and clear
Protection class		UL Type 4/4X/13, IP2X, IP65
Terminals		Plug-in terminal block, up to 2.5 mm^2 (14 AWG), IP2X fingersafe
Operation temperature range		-25...+60 °C (-13...+140 °F)
Storage temperature range		-25...+85 °C (-13...+185 °F)
Mounting		Central mounting for bore holes 22 mm or 30.5 mm with hole adapter kit (Cat. No. 855P-AHA1)
Mounting nut torque		1.7 N•m (15 lb•in)

Table 5 - Electrical

Attribute		LED Beacon — Steady/Flashing			Strobe Light		
		65 mm	45 mm	30 mm	65 mm	45 mm	30 mm
Supply voltage range	12V AC/DC, 50/60 Hz	±10%	±10%	±10%	—	—	±10%
	24V AC/DC, 50/60 Hz	±10%	±10%	±10%	—	—	±10%
	12...24V AC/DC, 50/60 Hz	—	—	—	8...26V AC/DC	8...26V AC/DC	—
	120V AC, 50/60 Hz	±10%	±10%	±10%	±10%	±10%	±10%
	230/240V AC, 50/60 Hz	±10%	±10%	±10%	±10%	±10%	±10%
Nominal current — single circuit (dual circuit)	12V AC/DC, 50/60 Hz	75 mA	60 mA	30 mA	—	—	15 mA
	24V AC/DC, 50/60 Hz	54 mA (full: 71 mA half: 44 mA)	35 mA (full: 46 mA half: 39 mA)	25 mA (full: 28 mA half: 30 mA)	—	—	10 mA
	12...24V AC/DC, 50/60 Hz @ 12V	—	—	—	150 mA	110 mA	—
	12...24V AC/DC, 50/60 Hz @ 24V	—	—	—	140 mA	100 mA	—
	120V AC, 50/60 Hz	25 mA (full: 61 mA half: 41 mA)	25 mA (full: 35 mA half: 35 mA)	20 mA	30 mA	20 mA	10 mA
	230/240V AC, 50/60 Hz	25 mA (full: 61 mA half: 41 mA)	25 mA (full: 35 mA half: 34 mA)	20 mA	20 mA	12 mA	10 mA
Turn-on leakage current		≥3 mA	≥3 mA	≥3 mA	≥3 mA	≥3 mA	≥3 mA
Steady/Flashing light		Externally by terminal connection			—	—	—
Flashing frequency		2 Hz	2 Hz	2 Hz	1.4 Hz (min)	1.4 Hz (min)	1.4 Hz (min)
Light source		LED			Xenon tube		LED
Flash energy		—	—	—	1 J	1.5 J	—
Weight		60 g (2.1 oz)	40 g (1.4 oz)	40 g (1.4 oz)	80 g (2.8 oz)	60 g (2.1 oz)	40 g (1.4 oz)

Approximate Dimensions

Dimensions in millimeters (inches). Dimensions are not intended to be used for manufacturing purposes.

Terminal connector for 30 mm devices adds 14 mm (0.55 in.) to back-of-panel depth
Terminal connector for 45 mm and 65 mm devices adds 9 mm (0.35 in.) to back-of-panel depth

30 mm Sounder

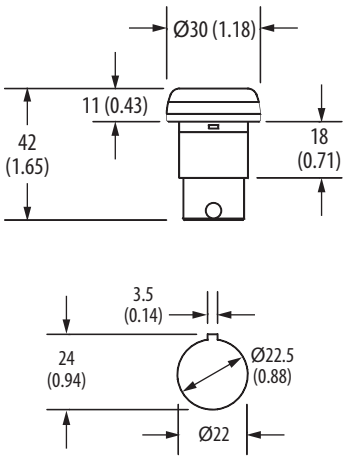

45 mm Sounder

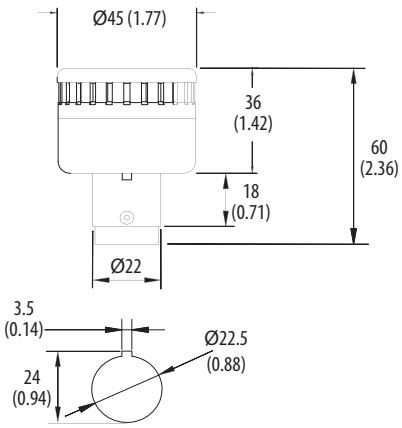

65 mm Sounder

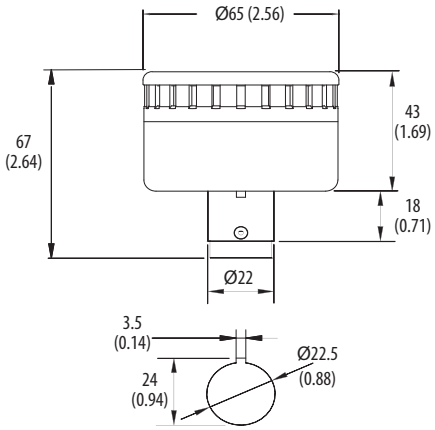

45 mm Combined Sounder with LED Beacon

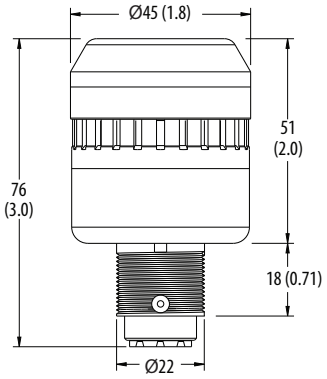

65 mm Combined Sounder with LED Beacon

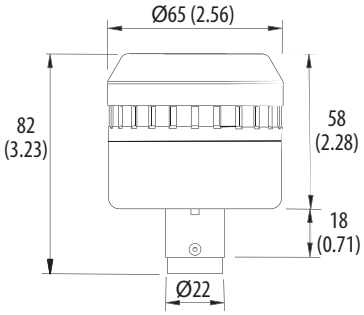

30 mm LED
30 mm Strobe

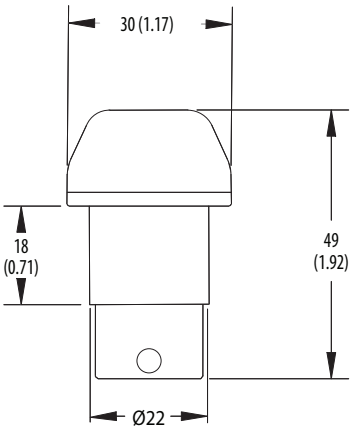

45 mm LED
45 mm Strobe

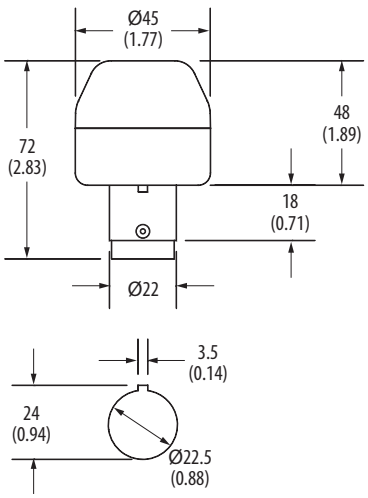

65 mm LED
65 mm Strobe

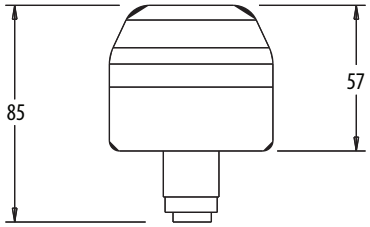

These panel light bars are ideal for OEMs and panel builders who want to reduce the quantity of components without the loss of design reliability or functionality. These devices remove your need for a separate fluorescent lamps purchase. They can be left ON continuously due to low power consumption and minimum heat generation of modern status indicator technology.

Specifications

Cat. No. 855L-NX1

Cat. No. 855L-NX4

Attribute	855L-NX1 (24...48V with ON/OFF Switch) 855L-NX2 (24...48V - No Switch)	855L-NX3 (110...240V with ON/OFF Switch) 855L-NX4 (110...240V - No Switch)
Nominal Input Voltage	24...48V AC/DC, 50/60 Hz	855L-NX3: 110...240V AC, 50/60 Hz 855L-NX4: 110...240V AC/DC, 50/60 Hz
Input Voltage Limits	17...63V DC 17...53V AC, 50/60 Hz	90...320V DC (855L-NX4 only) 90...250V AC, 50/60 Hz
Nominal Current	~300 mA @ 24V DC/ ~150 mA @ 48V DC	<70 mA @ 120V AC/ <55 mA @ 240V AC
Inrush Current	1 A @ 24V DC, ~2 A @ 48V DC, 25 °C (77 °F)	~3.5 A @ 120V AC/ ~7 A @ 240V AC
Leakage Current Immunity	>8 mA DC	>3 mA AC/~1 mA DC
Ingress Protection	855L-NX1: NEMA 1, IP40 855L-NX2: NEMA 1, IP44	855L-NX3: NEMA 1, IP40 855L-NX4: NEMA 1, IP44
Operating Temperature Range	-35...+60 °C (-31...+140 °F)	
Storage Temperature Range	-35...+85 °C (-31...+185 °F)	
Wire Size	22...14 AWG (0.5...2.5 mm^2)	
Light Beam Angle	~70°	
LED Color	White	
Light Output, min	470 lumens	
Lens Material	Polycarbonate (clear)	
Base Material	Polycarbonate (light gray)	
Mounting Orientation	No restrictions	
Mounting Screws (not provided)	2 X 1/4 in. (M5/ M6)	
Weight	380 g (<1 lb)	
LED MTFB	50,000 hr	

Table 6 - Standards and Certifications

Attribute	Bulletin 855L
Standards Compliance	• EN61000-6-2 • EN61000-6-3 • EN60947-5-1
Certifications	• CE Marked • c-UL-us File No. E14840

Approximate Dimensions

Dimensions in millimeters (inches). Dimensions are not intended to be used for manufacturing purposes.

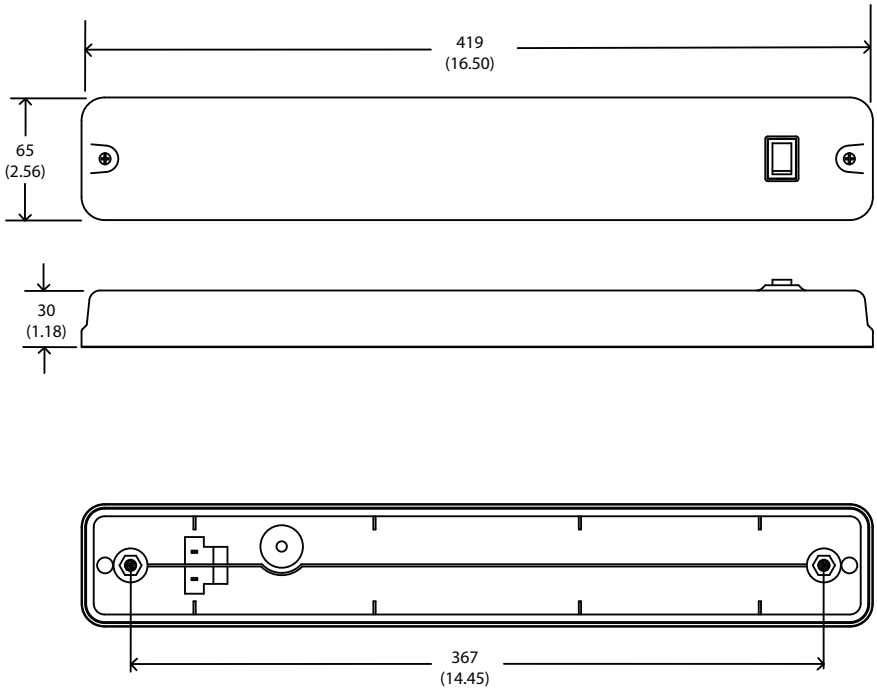

This product line includes general-purpose, high-performance, and recordable electronic horns.

Bulletin 855H — General-purpose Electronic Horns

These devices produce a sound output of 108 dB (A) maximum, which is suitable for most mid-range industrial and institutional, single-status signaling applications. The enhanced version produces sound output of 113 dB (A) max. Our horns have multi-tone and volume control capabilities. You can retrofit the horns directly into most machine panel cutouts or mount them into traditional 10.2 cm (4 in.) electrical back boxes.

855H	-	SG	10	GPA
		a	b	c

a	
Mounting Type	
Code	**Description**
FG	Semi-flush wall plate, gray housing
SG	Surface base with two conduit entrances, gray housing

b	
Voltage	
Code	**Description**
24	24V AC/DC
10	120V AC
20	240V AC
30	10...30V DC
45	40...260V AC/DC, 50/60 Hz

c	
Horn Type	
Code	**Description**
GPA (1)	General-purpose, 108 dB(A) max, single stage/circuit, three tones
GPE (2)	Enhanced version, 113 dB(A) max @ 1 m (3.3 ft), two stage, three tones, volume control

(1) Not valid with voltage codes 30 and 45 (Table b).
(2) Not valid with mounting type FG (Table a) or with voltage codes 24, 10, and 20 (Table b).

Accessories

	Description	Cat. No.
	M20 hole plug replacement kit (1)	855H-AHPK

(1) For use with mounting type SG only.

Specifications

Table 7 - Environmental

Attribute		Value
Ingress Ratings	Semi-flush Mount	UL Type 3R/13, IP54
	Surface Mount	UL Type 4/4X/13/3R, IP66
Temperature Ranges	Operating	-25...+55 °C (-13...+131 °F)
	Storage	-40...+70 °C (-40...+158 °F)

Table 8 - Materials

Part	Material
Housings including horn cover and base	Polycarbonate
O-ring	NBR
Gasket (mounting type FG)	EPDM/SBR closed-cell foam

Table 9 - Performance Ratings

Attribute		Performance Rating
Sound Output	Standard (GPA)	105±3 dB(A) @ 1 m (3.3 ft)
	Enhanced (GPE)	110±3 dB(A) @ 1 m (3.3 ft)

Table 10 - Operating Voltage and Currents

Attribute	Horn Type	DC Voltage	AC Voltage		
Input Voltage Ranges	Standard (GPA)	24V DC (±25%)	24V AC, 50/60 Hz (±10%)	120V AC, 50/60 Hz (±10%)	240V AC, 50/60 Hz (±10%)
	Enhanced (GPE)	10...30V DC	40...260V AC/DC		
Input Currents @ Nominal Voltage	Standard (GPA)	62 mA	220 mA	40 mA	50 mA
	Enhanced (GPE)	105 mA	—	36 mA	18 mA

Table 11 - Standards and Certifications

Attribute	Bulletin 855H — General-purpose Electronic Horns
Standards Compliance	• UL 464 • CSA C22.2 No. 205 • EN/IEC 60947-1 • EN/IEC 60947-5-1 • EN 6100-6-2 • EN 6100-6-3
Certifications	• c-UL-us Listed (File No. S6583, Guides UCST, UCST7) • CE Marked

Approximate Dimensions

Dimensions in millimeters (inches). Dimensions are not intended to be used for manufacturing purposes.

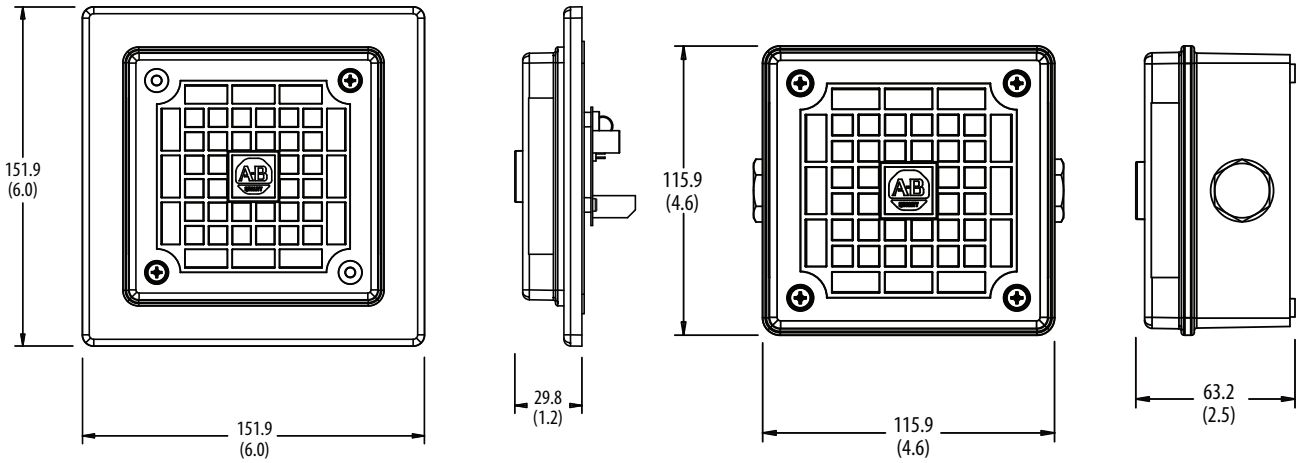

Semi-flush Mount

Surface Mount

Bulletin 855H — High-performance Electronic Horns

These devices are available as a standalone electronic horn or with beacon. They are available in plastic or marine-grade aluminum housing.

- 24V DC, 120V AC, and 240V AC
- IP66 enclosure rating
- Square xenon tube illumination available in six colors
- UV-stable plastic enclosure. UL Type 13/3R, IP66 (Frames A, B, D), c-UL-us Type 4/4X/13/3R (Frames C and E)
- Output/Tones:
  - Frame A: 100dB/10 tones (1 or 2 stages)
  - Frame B: 104 dB/32 tones (3 stages)
  - Frame C: 112 dB/32 tones (3 stages)
  - Frame D: 119 dB/45 tones (3 stages)
  - Frame E: 126 dB/45 tones (3 stages)

High-performance Electronic Horns

Range "A" Industrial Horn

Range "C" Industrial Horn

Range "E" Industrial Horn

855H	-	B	D30	B	D
		a	b	c	d

a	
Product Type	
Code	**Description**
B	Industrial horn, gray housing

b	
Voltage	
Code	**Description**
D30	10...30V DC
A24	24V AC, 50/60 Hz
A10	115V AC, 50/60 Hz
A20	230V AC, 50/60 Hz

c	
Horn Type	
Code	**Description**
A	100 dB, 10 tone, 2-stage (DC)
	100 dB, 10 tone, 1-stage (AC)
B	104 dB, 32 tone, 3-stage (DC)
	104 dB, 32 tone, 3-stage (AC)
C	112 dB, 32 tone, 3-stage (DC)
	112 dB, 32 tone, 3-stage (AC)
D	119 dB, 45 tone, 3-stage (DC)
	119 dB, 45 tone, 3-stage (AC)
E	126 dB, 45 tone, 3-stage (DC)
	126 dB, 45 tone, 3-stage (AC)

d	
Mount Option	
Code	**Description**
D	Standard base for surface or on-the-wall mounting with conduit openings and hole plugs

High-performance Electronic Horns with Attached Strobe Beacons

Range "A" Horn with Beacon

Range "C" Horn with Beacon

Range "E" Horn with Beacon

855H	-	BC	D12	E	D	R	3
		a	b	c	d	e	f

a	
Product Type	
Code	**Description**
BC	Electronic horn with Xenon strobe beacon, gray housing

b	
Voltage	
Code	**Description**
D12	12V DC
D24	24V DC
A24	24V AC, 50/60 Hz
A10	115V AC, 50/60 Hz
A20	230V AC, 50/60 Hz

c	
Horn Type	
Code	**Description**
A	100 dB, 10 tone, 2-stage (DC)
	100 dB, 10 tone, 1-stage (AC)
B	104 dB, 32 tone, 3-stage (DC)
	104 dB, 32 tone, 3-stage (AC)
C	112 dB, 32 tone, 3-stage (DC)
	112 dB, 32 tone, 3-stage (AC)
D	119 dB, 45 tone, 3-stage (DC)
	119 dB, 45 tone, 3-stage (AC)
E	126 dB, 45 tone, 3-stage (DC)
	126 dB, 45 tone, 3-stage (AC)

d	
Mount Option	
Code	**Description**
D	Standard base for surface or on-the-wall mounting with conduit openings and hole plugs

e	
Illuminated Function	
Code	**Description**
R	5 J strobe

f	
Lens Color	
Code	**Description**
3	Green
4	Red
5	Amber
6	Blue
7	Clear
8	Yellow

Accessories

	Description		Cat. No.
	M20 hole plug replacement kit		855H-AHPK
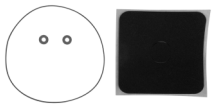	**Description**	**Type**	**Cat. No.**
	Gasket set replacement kit	Range A, B, and beacon light	855H-AGKBAB
		Range C horn	855H-AGKC
		Range D horn	855H-AGKD
		Range E horn	855H-AGKE
	Description	**Color**	**Cat. No.**
	Replacement Beacon Light Lens	Red	855B-ABLR
		Green	855B-ABLG
		Amber	855B-ABLA
		Blue	855B-ABLB
		Clear	855B-ABLC
		Yellow	855B-ABLY

Specifications

Table 12 - Mechanical

Device	The following are reference guidelines for maximum shock and vibration standards for the 855H horn.	
	Shock	Vibration
Range A horn	15 G peak	3 G peak
Range B horn	15 G peak	3 G peak
Range C horn	15 G peak	3 G peak
Range D horn	15 G peak	3 G peak
Range E horn	15 G peak	1 G peak
Range A horn with strobe beacon	15 G peak	3 G peak
Range B horn with strobe beacon	15 G peak	3 G peak
Range C horn with strobe beacon	15 G peak	3 G peak
Range D horn with strobe beacon	15 G peak	3 G peak
Range E horn with strobe beacon	15 G peak	1 G peak

Table 13 - Environmental

Attribute	Device	Value
Ingress ratings	Electronic horns	Range A, B, and D: UL Type 13/3R, IP66 Range C and E: UL Type 4/4X/13/3R, IP66
	Horn with beacon	Range A, B, and D: UL Type 13/3R, IP66 Range C and E: UL Type 4/4X/13/3R, IP66
Temperature ranges	Operating	-25...+55 °C (-13...+131 °F)
	Storage	-40...+75 °C (-40...+167 °F)

Table 14 - Materials

Part	Material
Horn cover and base	ABS
Beacon housing	Polycarbonate
Beacon lens	Polycarbonate
Gasket (cover to base)	Nitrile 70
Gasket (enclosure back to wall)	Nitrile 70
Gasket (horn to beacon)	Nitrile 70
Gasket (screw mounting hole)	Fiber

Table 15 - Performance Ratings

Attribute	Device	Performance Rating
Sound output	Range A horn	100 dB max @ 1 m (3.3 ft)
	Range B horn	104 dB max @ 1 m (3.3 ft)
	Range C horn	112 dB max @ 1 m (3.3 ft)
	Range D horn	119 dB max @ 1 m (3.3 ft)
	Range E horn	126 dB max @ 1 m (3.3 ft)
Xenon Lamp Rating	Strobe beacon	5 J output

Table 16 - Operating Voltage

Device	DC Voltage		AC Voltage		
	Range A	Range B	Range C	Range D	Range E
All horns	10...30V DC	10...30V DC	24V AC, 50/60 Hz (±10%)	115V AC, 50/60 Hz (±10%)	230V AC, 50/60 Hz (±10%)
All horns with strobe beacon	12V DC ±10%	24V DC ±10%			

Table 17 - Current Consumption [mA]

Attribute		Range A	Range B	Range C	Range D	Range E
Horns	10...30V DC	25	25	25	200	950
	24V AC, 50/60 Hz	40	40	40	500	1000
	115V AC, 50/60 Hz	13	20	20	100	240
	240V AC, 50/60 Hz	13	15	15	60	120
Horns with strobe beacon	12V DC	525	525	525	700	1450
	24V DC	275	275	275	450	1200
	24V AC	405	405	405	865	1200
	115V AC	113	120	120	200	340
	240V AC	63	65	65	110	170

Table 18 - Flashing Frequency

Attribute	Range A	Range B	Range C	Range D	Range E
Strobe beacon	1 Hz				

Table 19 - Standards and Certifications

Attribute	Bulletin 855H — High-performance Electronic Horns
Standards compliance	• UL 464 • CSA C22.2 No. 205 • EN/IEC 60947-1 • EN/IEC 60947-5-1 • EN 6100-6-2 • EN 6100-6-4
Certifications	• c-UL-us Listed (File No. S6583, Guides UCST, UCST7) • CE Marked

Approximate Dimensions

Dimensions in millimeters (inches). Dimensions are not intended to be used for manufacturing purposes.

Figure 1 - Horns

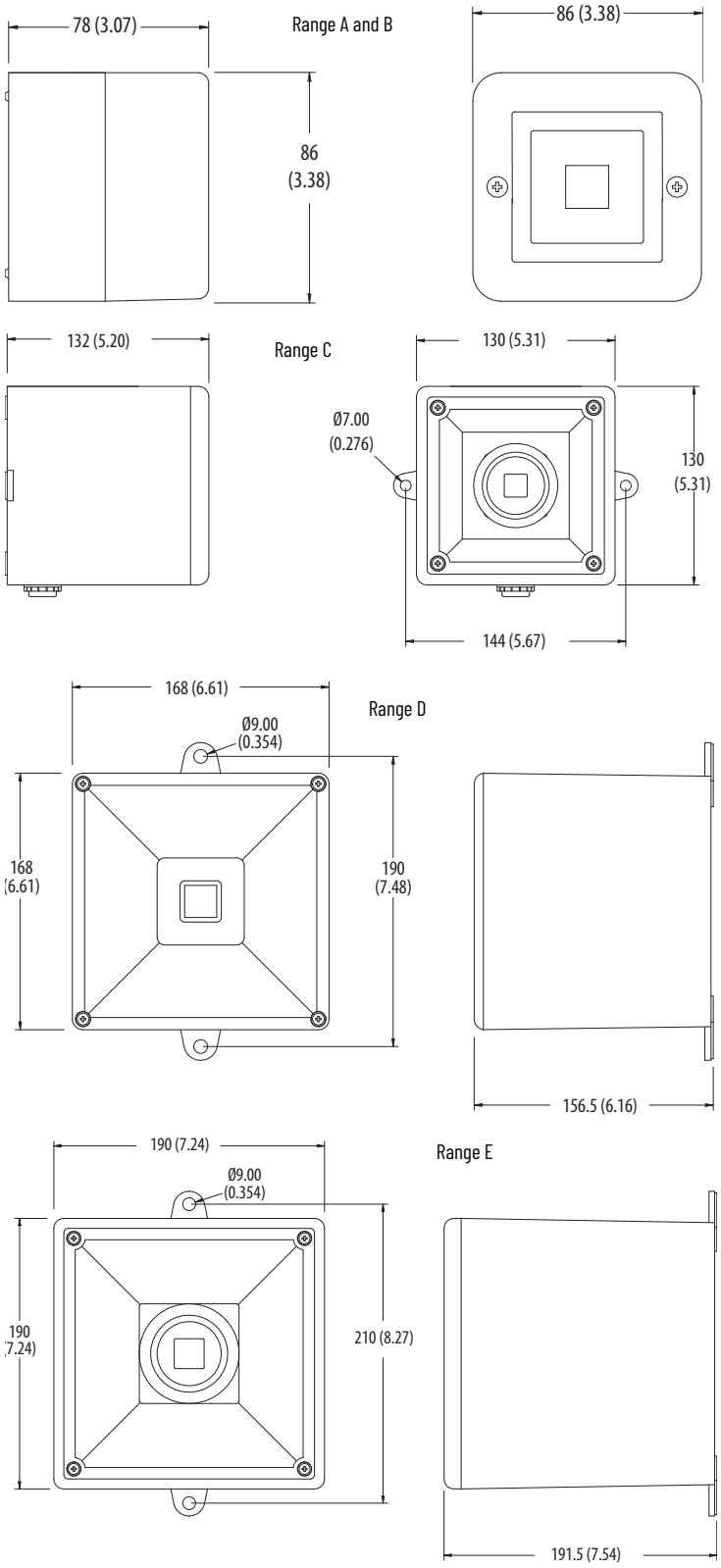

Dimensions in millimeters (inches). Dimensions are not intended to be used for manufacturing purposes.

Figure 2 - Horns with Beacons

Range A and B

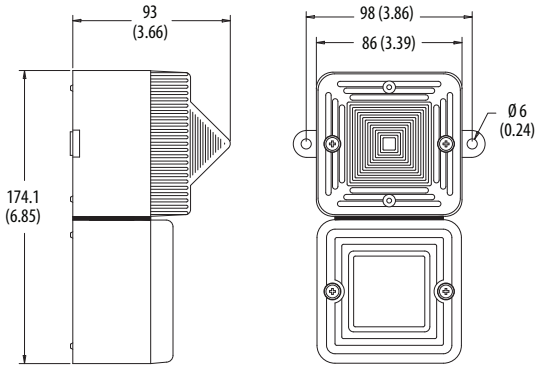

Range C

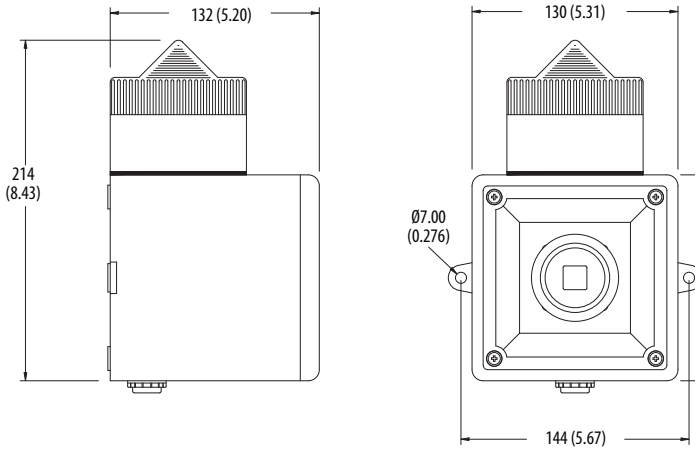

Range D

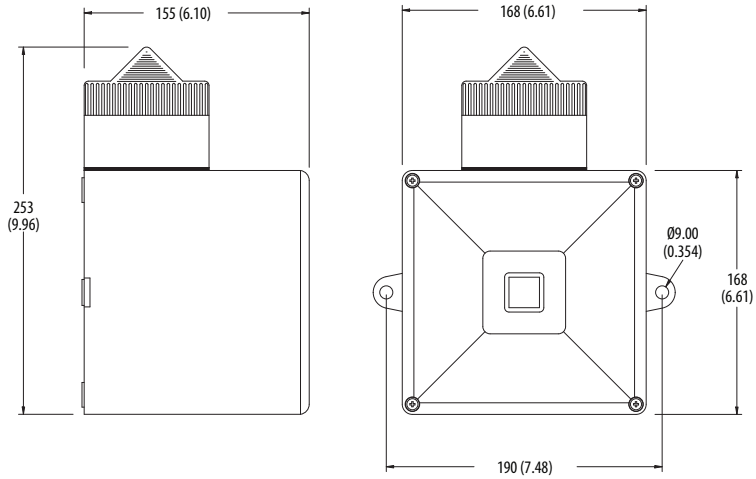

Range E

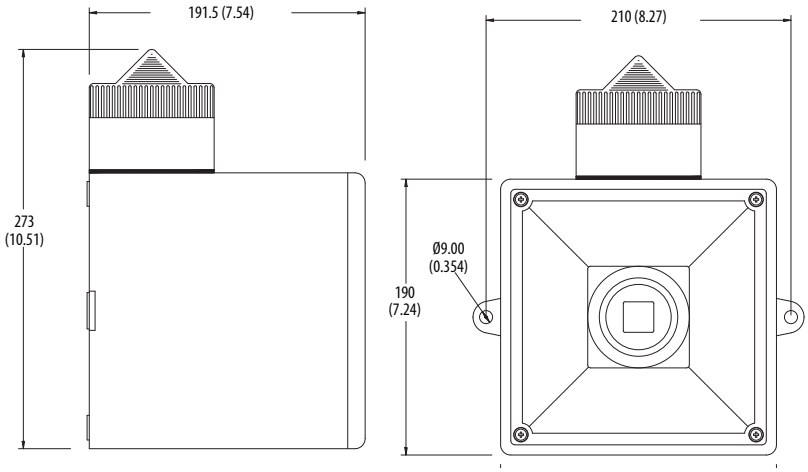

Bulletin 855H – Recordable Electronic Horns

These devices are available as a standalone electronic horn or with a beacon. You can download melodies or customized tones from any analog device (such as a personal computer or MP3 player). You can also record voice by speaking directly into the unit via an onboard microphone; you do not need to purchase additional recording hardware or equipment.

Frame C (DC)

Frame C (AC)

Frame E (All Versions)

Flair Style (All Versions)

855H	-	R	30	C
		a	b	c

a	
Product Type	
Code	**Description**
R	Recordable horn

b	
Voltage (1)	
Code	**Description**
30	10...30V DC
45	90...260V AC, 50/60 Hz

c	
Frame Size	
Code	**Description**
C	Frame C, 101 dB (A) voice, 110 dB (A) tone at 1 m (3.3 ft), 45 tones, gray housing
E	Frame E, 111 dB (A) voice, 126 dB (A) tone at 1 m (3.3 ft), 45 tones, gray housing
F	Flare style, 111 dB (A) voice, 126 dB (A) tone at 1 m (3.3 ft), 45 tones, gray housing

(1) Frame C is 10...30V DC; Frame E and Flare are 14...30V DC

Recordable Electronic Horns with Attached LED Beacons

Frame C Horn with Beacon (DC)

Frame C Horn with Beacon (AC)

Frame E Horn with Beacon (All Versions)

855H	-	RC	30	C	3
		a	b	c	d

a	
Product Type (1)	
Code	**Description**
RC	Recordable horn with LED beacon, gray housing

b	
Voltage (2)	
Code	**Description**
30	12...30V DC
45	90...260V AC, 50/60 Hz

c	
Horn Type	
Code	**Description**
C	Frame C, 101 db(A) voice, 110 dB(A) tone at 1 m (3.3 ft), 45 selectable tones, 4 stages
E	Frame E, 111 db(A) voice, 126 dB(A) tone at 1 m (3.3 ft), 45 selectable tones, 4 stages

d	
LED Color	
Code	**Description**
3	Green
4	Red
5	Amber

(1) LED beacon steady or flashing selectable/
(2) Frame C is 12...30V DC; Frame E is 14...30V DC

Specifications

Table 20 - Mechanical

Device	The following are reference guidelines for maximum shock and vibration standards for the 855H horn.	
	Shock	Vibration
Frame C horn	15 G peak	3 G peak
Frame E horn	15 G peak	1 G peak
Flare style	15 G peak	1 G peak
Frame C horn with LED beacon	15 G peak	3 G peak
Frame E horn with LED beacon	15 G peak	1 G peak

Table 21 - Environmental

Attribute	Device	Value
Ingress ratings	Electronic horns	Frame C & E: UL Type 3R, 4/4X, 13, IP66 Flare: UL Type 3R, 4/4X, 13, IP66/IP67
	Horn with beacon	
Temperature ranges	Operating	-25...+55 °C (-13...+131 °F)
	Storage	-40...+70 °C (-40...+158 °F)

Table 22 - Materials

Part	Material
Horn cover and base	ABS
Beacon housing	Polycarbonate
Beacon lens	Polycarbonate
Gasket (cover to base)	Nitrile 70
Gasket (enclosure back to wall)	Closed-cell neoprene foam
Gasket (horn to beacon)	Closed-cell neoprene foam
Gasket (screw mounting hole)	Fiber

Table 23 - Performance Ratings

Attribute	Device	Performance Rating
Sound output	Frame C horn	110 dB(A) tone, 103 dB(A) music, 101 dB(A) voice @ 1 m (3.3 ft)
	Frame E horn	126 dB(A) tone, 112 dB(A) music, 111 dB(A) voice @ 1 m (3.3 ft)
	Flare style	

Table 24 - Operating Voltage

Device	DC Voltage	AC Voltage
All horns	Frame C: 10...30V DC Frame E and Flare: 14...30V DC	90...260V AC, 50/60 Hz
All horns with LED beacon	Frame C: 12...30V DC Frame E: 14...30V DC	

Table 25 - Maximum Current Consumption

Attribute		Frame C	Frame E	Flare Style
Horns	24V DC	256 mA	1.51 A	1.51 A
	120V AC, 50/60 Hz	112 mA	542 mA	542 mA
	230V AC, 50/60 Hz	124 mA	517 mA	517 mA
Horns with LED beacon	24V DC	413 mA	1.67 A	—
	120V AC, 50/60 Hz	172 mA	602 mA	—
	230V AC, 50/60 Hz	159 mA	552 mA	—

Table 26 - Flashing Frequency

Attribute		Frame C	Frame E	Flare Style
LED beacon		2 Hz		
LED light output	Red	66 cd		
	Amber	78 cd		
	Green	129 cd		

Table 27 - Standards and Certifications

Attribute	Bulletin 855H — Recordable Electronic Horns
Standards compliance	• UL 464 • CSA C22.2 No. 205 • EN 60065 • EN 6100-6-1 • EN 6100-6-2 • EN 6100-6-3 • EN 6100-6-4
Certifications	• c-UL-us Listed (File No. S6583, Guides UCST, UCST7) • CE Marked

Approximate Dimensions

Dimensions in millimeters (inches). Dimensions are not intended to be used for manufacturing purposes.

Figure 3 - Recordable Horns

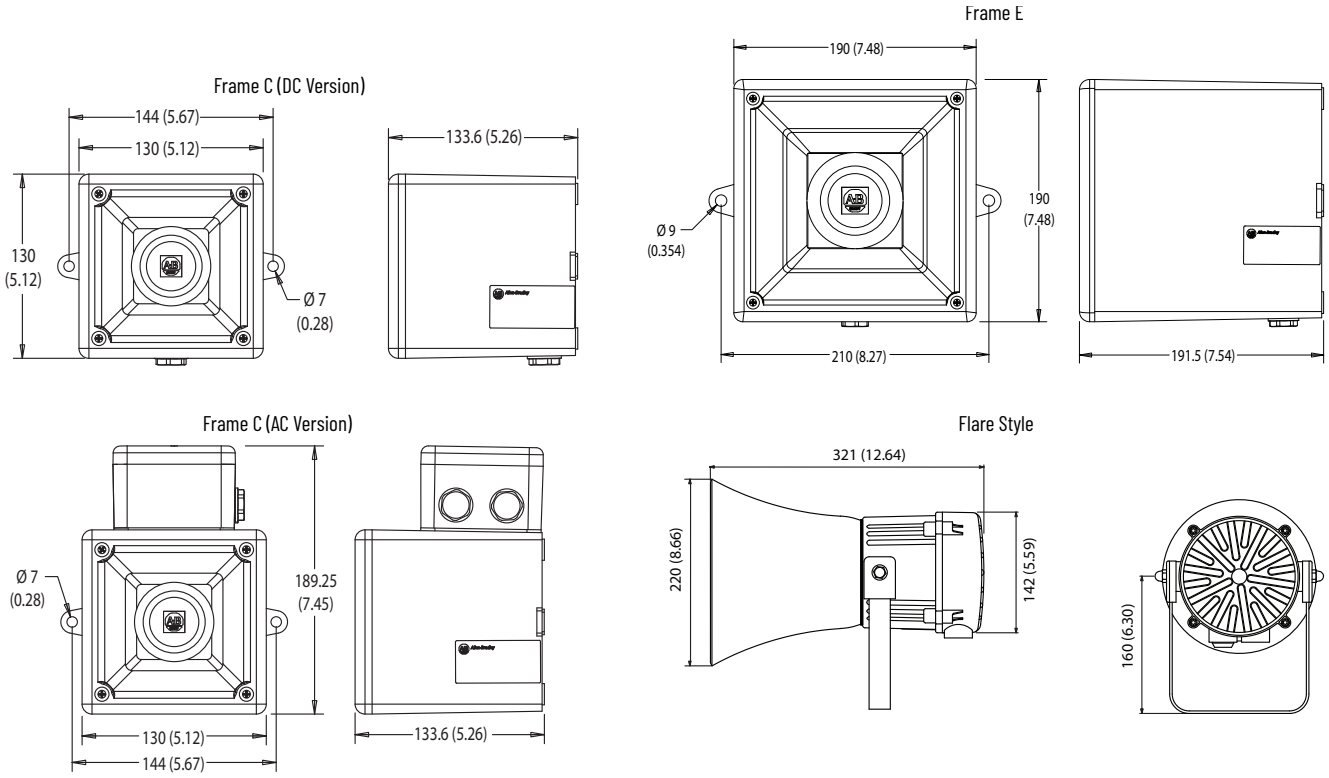

Figure 4 - Recordable Horns with LED Beacon

Frame C (DC Version)

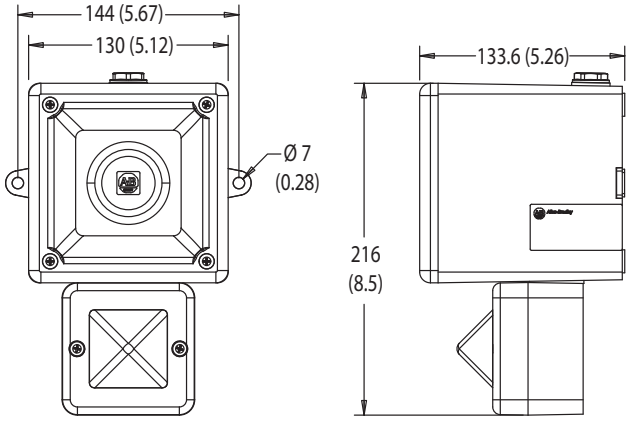

Frame C (AC Version)

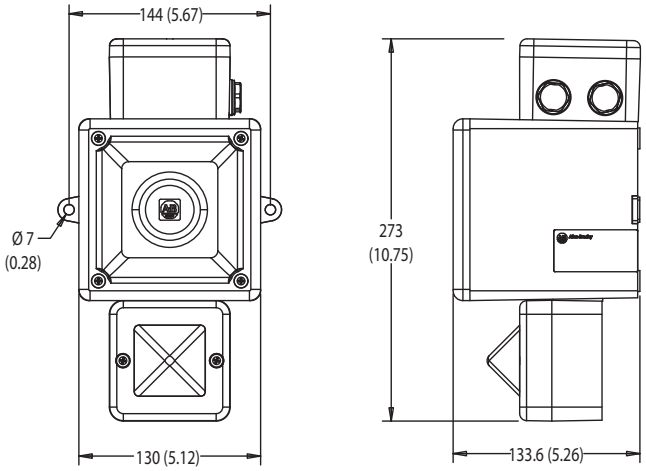

Frame E

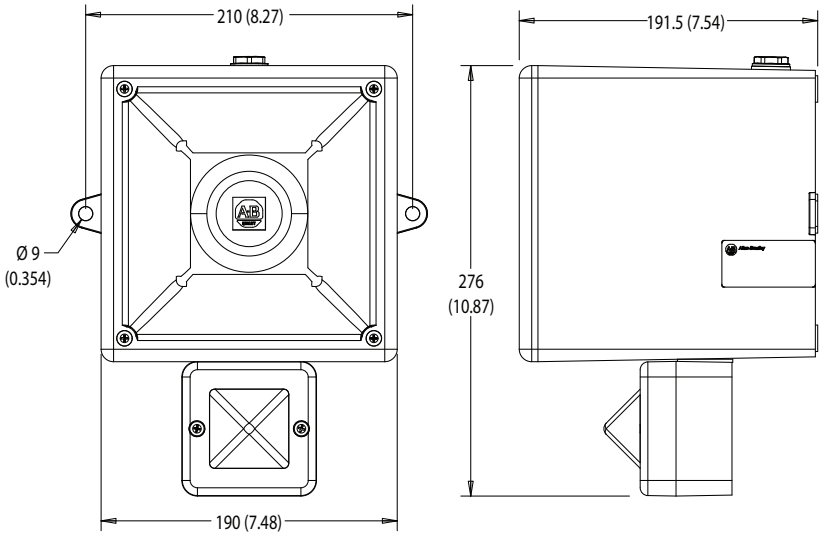

Bulletin 855HM — High-performance Electronic Metal Horns

These devices are available as a standalone electronic horn or with a beacon. They are available in plastic or marine-grade aluminum housing.

- 24V DC, 120V AC, and 240V AC
- IP66 enclosure rating
- Selectable steady/flashing LED dome-shaped illumination available in five colors
- Marine-grade aluminum enclosure (c-UL-us, Type 4/4X/13/3R)
- Output/Tones: 119 dB/45 tones (3 stages)

High-performance Electronic Metal Horns

855HM	-	G	M	D30	D
		a	b	c	d

a	
Housing Color	
Code	Description
G	Gray

b	
Conduit Entry	
Code	Description
M	Two M20 x 1.5 mm conduit entries

c	
Voltage	
Code	Description
D30	10...30V DC
A10	115V AC, 50/60 Hz
A20	230V AC, 50/60 Hz

d	
Horn Type	
Code	Description
D	119 dB, 45 tone, 3-stage

High-performance Electronic Metal Horns with Attached LED Beacons

855HM	-	C	G	M	D30	D	L	3
		a	b	c	d	e	f	g

a	
Product Type	
Code	Description
C	Electronic horn with LED steady/flashing beacon

b	
Housing Color	
Code	Description
G	Gray

c	
Conduit Entry	
Code	Description
M	Two M20 x 1.5 mm conduit entries

d	
Voltage	
Code	Description
D30	12...30V DC
A10	115V AC, 50/60 Hz
A20	230V AC, 50/60 Hz

e	
Horn Type	
Code	Description
D	119 dB, 45 tone, 3-stage

f	
Illumination Function	
Code	Description
L	Steady/flashing LED

g	
Lens Color	
Code	Description
3	Green
4	Red
5	Amber
6	Blue
7	Clear

Accessories

	Description	Cat. No.
	M20 hole plug replacement kit	855H-AHPK

Specifications

Table 28 - Mechanical

Device	The following are reference guidelines for maximum shock and vibration standards for the 855XM horn.	
	Shock [G]	Vibration [G]
Metal horn	40	3
Metal horn with LED beacon	30	3

Table 29 - Environmental

Attribute	Device	Value
Ingress rating	Electronic horn	UL Type 4/4X/13/3R, IP66
	Horn with beacon	UL Type 4/4X/13/3R, IP66
Temperature range	Operating	-25...+55 °C (-13...+131 °F)
	Storage	-40...+70 °C (-40...+158 °F)

Table 30 - Materials

Part	Material
Housing	Marine-grade aluminum Al Si 12 Cu (phosphated and powder-coated)
Screws	Stainless steel
Beacon lens	Clear polycarbonate over glass
Lens cage	Stainless steel
Gasket (cover to base)	O-ring nitrile UL
Gasket (screw mounting hole)	Fiber washer

Table 31 - Performance Ratings

Device	Sound Output @ 1 m (3.3 ft)	Volume Control	No. of Tones	Stages
Metal horn	119 dB max	Adjustable -12 dB	45	3
	LED Output [cd]			
Red LED beacon	66			
Amber LED beacon	78			
Green LED beacon	176			
Blue LED beacon	45			
Clear LED beacon	120			

Table 32 - Operating Voltage

Device	DC Voltage	AC Voltage
Horn	10...30V DC	115V AC 50/60 Hz (±10%) 230V AC 50/60 Hz (±10%)
Horn with beacon	12...30V DC	115V AC 50/60 Hz (±10%) 230V AC 50/60 Hz (±10%)

Table 33 - Current Consumption

Device	Voltage	Current Consumption
Horns	10...30V DC	270 mA max. @ 30V 200 mA @ 24V 100 mA @ 12V
	115V AC 50/60 Hz	100 mA
	230V AC 50/60 Hz	60 mA
Horns with LED beacon	12...30V DC	436 mA max. @ 30V 357 mA @ 24V 220 mA @ 12V
	115V AC	160 mA
	230V AC	95 mA

Table 34 - Flashing Frequency

Device	Frequency
LED beacon	Steady or 2 Hz

Table 35 - Standards and Certifications

Attribute	Bulletin 855HM — High-performance Electronic Metal Horns
Standards compliance	• CSA C22.2 No. 205 • EN/IEC 60947-1 • EN/IEC 60947-5-1 • EN 61000-6-2 • EN 61000-6-4 • UL 464 • UL 1638
Certifications	• CE Marked • c-UL-us Listed (File No. E197159 and S6583, Guides UCST, UCST7)

Tone Table

Tone Selection										
STAGE 1	FREQUENCY DESCRIPTION		Switch						Stage 2	Stage 3
Tone 1	340 Hz Continuous								Tone 2	Tone 5
Tone 2	800/1000Hz @ 0.25 sec Alternating		■						Tone 17	Tone 5
Tone 3	500/1200Hz @ 0.3Hz 0.5 sec Slow Whoop			■					Tone 2	Tone 5
Tone 4	800/1000Hz @ 1Hz Sweeping		■	■					Tone 6	Tone 5
Tone 5	2400Hz Continuous				■				Tone 3	Tone 20
Tone 6	2400/2900Hz @ 7Hz Sweeping		■		■				Tone 7	Tone 5
Tone 7	2400/2900Hz @ 1Hz Sweeping			■	■				Tone 10	Tone 5
Tone 8	500/1200/500Hz @ 0.3Hz Sweeping		■	■	■				Tone 2	Tone 5
Tone 9	1200/500Hz @ 1Hz - DIN / PFEER P.T.A.P.					■			Tone 15	Tone 2
Tone 10	2400/2900Hz @ 2Hz Alternating		■			■			Tone 7	Tone 5
Tone 11	1000Hz @ 1Hz Intermittent			■		■			Tone 2	Tone 5
Tone 12	800/1000Hz @ 0.875Hz Alternating		■	■		■			Tone 4	Tone 5
Tone 13	2400Hz @ 1Hz Intermittent				■	■			Tone 15	Tone 5
Tone 14	800Hz 0.25sec on, 1 sec off Intermittent		■		■	■			Tone 4	Tone 5
Tone 15	800Hz Continuous			■	■	■			Tone 2	Tone 5
Tone 16	660Hz 150mS on, 150mS off Intermittent		■	■	■	■			Tone 18	Tone 5
Tone 17	544Hz (100mS)/440Hz (400mS) - NF S 32-001						■		Tone 2	Tone 27
Tone 18	660Hz 1.8sec on, 1.8sec off Intermittent		■				■		Tone 2	Tone 5
Tone 19	1.4KHz-1.6KHz 1s, 1.6KHz-1.4KHz 0.5s -NFC48-265			■			■		Tone 2	Tone 5
Tone 20	660Hz Continuous		■	■			■		Tone 2	Tone 5
Tone 21	554Hz/440Hz @ 1Hz Alternating				■		■		Tone 2	Tone 5
Tone 22	544Hz @ 0.875 sec. Intermittent		■		■		■		Tone 2	Tone 5
Tone 23	800Hz @ 2Hz Intermittent			■	■		■		Tone 6	Tone 5
Tone 24	800/1000Hz @ 50Hz Sweeping		■	■	■		■		Tone 29	Tone 5
Tone 25	2400/2900Hz @ 50Hz Sweeping					■	■		Tone 29	Tone 5
Tone 26	Bell		■			■	■		Tone 2	Tone 15
Tone 27	554Hz Continuous			■		■	■		Tone 26	Tone 5
Tone 28	440Hz Continuous		■	■		■	■		Tone 2	Tone 5
Tone 29	800/1000Hz @ 7Hz Sweeping				■	■	■		Tone 7	Tone 5
Tone 30	300Hz Continuous		■		■	■	■		Tone 2	Tone 5
Tone 31	660/1200Hz @ 1Hz Sweeping			■	■	■	■		Tone 26	Tone 5
Tone 32	Two tone chime.		■	■	■	■	■		Tone 26	Tone 15
Tone 33	745Hz @ 1Hz Intermittent							■	Tone 2	Tone 5
Tone 34	1000 & 2000Hz @ 0.5 sec Alternating - Singapore		■					■	Tone 38	Tone 45
Tone 35	420Hz @ 0.625 sec Australian Alert			■				■	Tone 36	Tone 5
Tone 36	500-1200Hz 3.75sec /0.25sec. Australian Evac.		■	■				■	Tone 35	Tone 5
Tone 37	1000Hz Continuous - PFEER Toxic Gas				■			■	Tone 9	Tone 45
Tone 38	2000Hz Continuous		■		■			■	Tone 34	Tone 45
Tone 39	800Hz 0.25sec on, 1 sec off Intermittent			■	■			■	Tone 23	Tone 17
Tone 40	544Hz (100mS)/440Hz (400mS) - NF S 32-001		■	■	■			■	Tone 31	Tone 27
Tone 41	Motor Siren - slow rise to 1200 Hz					■		■	Tone 2	Tone 5
Tone 42	Motor Siren - slow rise to 800 Hz		■			■		■	Tone 2	Tone 5
Tone 43	1200 Hz Continuous			■		■		■	Tone 2	Tone 5
Tone 44	Motor Siren - slow rise to 2400 Hz		■	■		■		■	Tone 2	Tone 5
Tone 45	1KHz 1s on, 1s off Intermittent - PFEER Gen. Alarm				■	■		■	Tone 38	Tone 34

Approximate Dimensions

Dimensions in millimeters (inches). Dimensions are not intended to be used for manufacturing purposes.

855HM Metal Horn

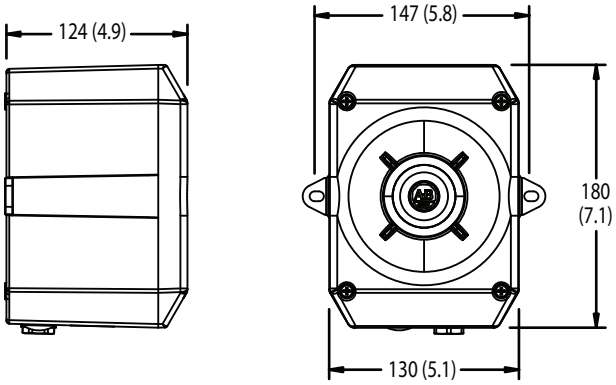

855HM-C Metal Horn with LED Beacon

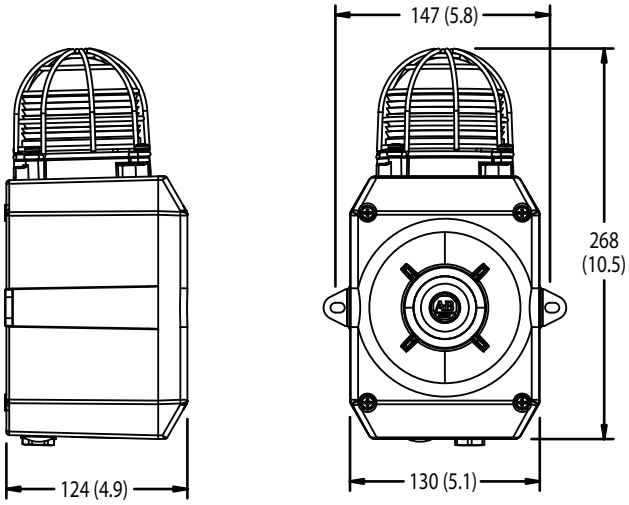

This product line includes mini square and round beacons.

Bulletin 855B — Mini Square Beacons

Mini square 5 J strobe beacons are for general signaling applications. Bases accept conduit connections in the side and back of enclosure.

Mini Square Strobe Beacon

855B	-	G	MS	12	R	3
		a	b	c	d	e

a	
Housing Color	
Code	Description
G	Gray

b	
Beacon Type	
Code	Description
MS	Mini square beacon

c	
Voltage	
Code	Description
24	24V AC/DC
10	115V AC, 50/60 Hz
20	230V AC, 50/60 Hz

d	
Illumination Type	
Code	Description
R	5 J strobe

e	
Lens Color	
Code	Description
3	Green
4	Red
5	Amber
6	Blue
7	Clear
8	Yellow

Accessories

	Description	Color	Cat. No.
	Replacement Beacon Light Lens	Red	855B-ABLR
		Green	855B-ABLG
		Amber	855B-ABLA
		Blue	855B-ABLB
		Clear	855B-ABLC
		Yellow	855B-ABLY

Specifications

Table 36 - Mechanical

Device	The following are reference guidelines for maximum shock and vibration standards for the 855B beacon lights.	
	Shock	Vibration
All strobe beacons	50 G peak	5 G peak

Table 37 - Environmental

Attribute	Value
Ingress ratings	UL Type 4/4X/13/3R, IP66
Operating temperature range	-25...+55 °C (-12...+131 °F)

Table 38 - Materials

Part	Material
Housing and lens	Polycarbonate
Gasket	Nitrile 70

Table 39 - Performance Ratings

Attribute	Device	Performance Rating
Xenon lamp rating	All strobe beacons	5 J

Table 40 - Operating Voltage

Device	Operating Voltage		
All strobe beacons	24V AC/DC, 50/60 Hz (±20%)	120V AC, 50/60 Hz (±10%)	230V AC, 50/60 Hz (±10%)

Table 41 - Current Consumption

Device		Current Consumption [mA]
All strobe beacons	24V AC/DC	365/250
	120V AC	100
	230V AC	50

Table 42 - Flashing Frequency

Device	Flashing Frequency
Strobe beacon	1 Hz

Table 43 - Standards and Certifications

Attribute	Bulletin 855B — Mini Square Beacons
Standards compliance	• UL 464 • UL 1638 • CSA C22.2 No. 205 • EN/IEC 60947-1 • EN/IEC 60947-5-1 • EN 6100-6-2 • EN 6100-6-4 • CAN/ULLC-S526-M87
Certifications	• c-UL-us Listed (File No. E197159, Guides UUES, UEES7) • CE Marked

Approximate Dimensions

Dimensions in millimeters (inches). Dimensions are not intended to be used for manufacturing purposes.

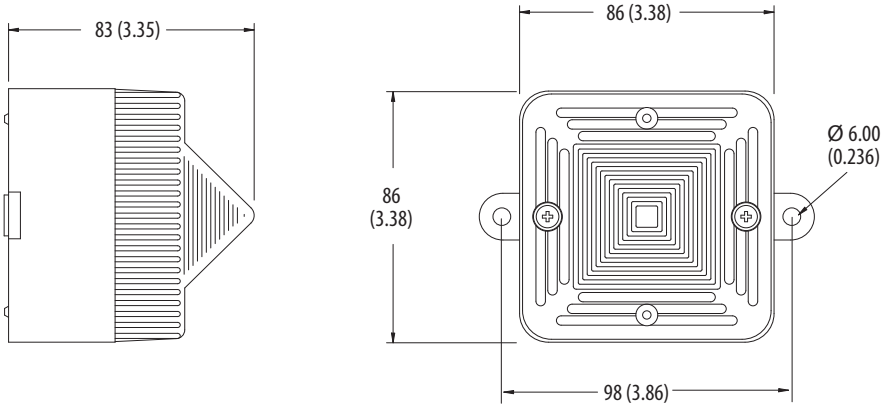

Bulletin 855B — Industrial Round Beacons

These devices are available in three diameters: 90 mm (Bul. 855BS), 120 mm (Bul. 855BM), and 160 mm (Bul. 855BL).

All sizes are available in steady halogen, flashing halogen, strobe, and rotating halogen versions for flexibility in your applications. You can select from a wide range of mounting options, voltages, and colors.

Bulletin 855BS — 90 mm Beacons

855BS	-	S	10	RH	3
		a	b	c	d

a	
Base Type	
Code	**Description**
S	Surface mount (1)
N	1/2 in. NPT conduit mount
T	25 mm tube mount (2)

b	
Voltage	
Code	**Description**
12	12V AC/DC
24	24V AC/DC
10	120V AC
20	240V AC
35	24/48V AC/DC
45	120/240V AC/DC

c	
Function	
Code	**Description**
DH	Steady halogen
FH	Flashing halogen
RH	Rotating halogen
BR	Xenon tube strobe (3)
SL	Single-color LED selectable steady/flash (4)
ML	Three-color LED (5) (6)
BL	LED strobe selectable single/double flash(7)

d	
Lens Color	
Code	**Description**
345	Green, red, amber (6)
3	Green
4	Red
5	Amber
6	Blue
7	Clear
8	Yellow

(1) Surface mount base must be installed with rough wall plate for UL Type 4/4X/13 rating, otherwise UL Type 1 only.
(2) 25 mm tube mount is UL Recognized. Other mounting types are UL Listed.
(3) Not available in 12V AC/DC.
(4) SL function uses 35 (16...60V AC/16...80V DC) and 45 (90...250V AC/DC) voltage codes only
(5) ML function uses 24, 10, and 20 voltage codes only.
(6) Green, red, amber color combination is only valid for the three-color LED selection (ML).
(7) BL function uses 35 (19...52V AC/16...60V DC), 10, and 20 voltage codes only.

Bulletin 855BM — 120 mm Beacons

855BM	-	S	10	FH	4
		a	b	c	d

a	
Base Type	
Code	**Description**
S	Surface mount [1]
N	1/2 in. NPT conduit mount
T	25 mm tube mount

b	
Voltage	
Code	**Description**
12	12V AC/DC
24	24V AC/DC
10	120V AC
20	240V AC

c	
Function	
Code	**Description**
DH	Steady halogen
FH	Flashing halogen
RH	Rotating halogen
BR	Xenon tube strobe [2]

d	
Lens Color	
Code	**Description**
3	Green
4	Red
5	Amber
6	Blue
7	Clear
8	Yellow

(1) When used outdoors, surface mount base must be installed with rough wall plate for UL Type 4/4X/13 rating, otherwise UL Type 1 only.
(2) Not available in 12V AC/DC.

Bulletin 855BL — 160 mm Beacons

855BL	-	N	24	DH	5
		a	b	c	d

a	
Base Type	
Code	**Description**
S	Surface mount [1]
N	1 in. NPT conduit mount
T	25 mm tube mount

b	
Voltage	
Code	**Description**
12	12V AC/DC
24	24V AC/DC
10	120V AC
20	240V AC

c	
Function	
Code	**Description**
DH	Steady halogen
FH	Flashing halogen
RH	Rotating halogen
BR	Xenon tube strobe [2]

d	
Lens Color	
Code	**Description**
3	Green
4	Red
5	Amber
6	Blue
7	Clear
8	Yellow

(1) When used outdoors surface mount base must be installed with rough wall plate for UL Type 4/4X/13 rating, otherwise UL Type 1 only.
(2) Not available in 12V AC/DC.

Accessories

Lamps

855B	M	-	LH	10
	a		b	c

a	
Size	
Code	Description
S	90 mm
M	120 mm
L	160 mm

b	
Function	
Code	Description
LH	Halogen

c	
Voltage	
Code	Description
12	12V AC/DC
24	24V AC/DC
10	120V AC
20	240V AC

Lenses

855B	L	-	AFL	4
	a		b	c

a	
Size	
Code	Description
S	90 mm
M	120 mm
L	160 mm

b	
Function	
Code	Description
ASL	Replacement smooth lens (1)
AFL	Replacement Fresnel lens (2)
ALL	Replacement LED lens (3)

c	
Voltage	
Code	Description
3	Green
4	Red
5	Amber
6	Blue
7	Clear
8	Yellow

(1) Smooth lens for rotating function only.
(2) Fresnel lens not for use with LED beacons
(3) LED lens for 90 mm only.

Power Module Assemblies

855B	L	-	ARA	10
	a		b	c

a	
Size	
Code	Description
S	90 mm
M	120 mm
L	160 mm

b	
Function	
Code	Description
ARA	Replacement rotating power module
ADA	Replacement steady power module
AFA	Replacement flashing power module
ABA	Replacement strobe power module

c	
Voltage	
Code	Description
12	12V AC/DC
24	24V AC/DC
10	120V AC
20	240V AC

Miscellaneous Accessories and Replacement Parts

855B	M	-	LS
	a		b

a	
Size	
Code	Description
S	90 mm
M	120 mm
L	160 mm

b	
Function	
Code	Description
ALSG	Lens gaskets (bag of 5)
AMM	Magnetic mount
ASFG	Surface mount gaskets (bag of 5)
AMTG	Metric tube gaskets (bag of 5)
AWP	Rough wall plate (1)
AVM	Vertical bracket
LS	Strobe tube (120 mm or 160 mm only) (2)
ABS	Surface mount base (3)
ABN	NPT conduit mount base

(1) Required for UL Type 4/4X/13 rating when using surface mount base outdoors.
(2) This replacement part is for use only in 120V and 240V units. For 24V units, order complete power module replacement (catalog number 855BM-ABA24 or catalog number 855BL-ABA24).
(3) When used outdoors surface mount base must be installed with rough wall plate for UL Type 4/4X/13 rating, otherwise UL Type 1 only.

Table 44 - Lamps, Lenses, and Power Modules

	Description		90 mm	120 mm	160 mm
	Replacement Lamps	**Voltage**	**Cat. No.**	**Cat. No.**	**Cat. No.**
	Xenon strobe tube		–	855BM-LS (1)	855BL-LS (1)
	Halogen for steady burning, flashing, and rotating illumination functions	12V AC/DC	855BS-LH12	855BM-LH12	855BL-LH12
		24V AC/DC	855BS-LH24	855BM-LH24	855BL-LH24
		120V AC	855BS-LH10	855BM-LH10	855BL-LH10
		240V AC	855BS-LH20	855BM-LH20	855BL-LH20
	Replacement Lenses	**Lens Color**	**Cat. No.**	**Cat. No.**	**Cat. No.**
	Smooth lens for rotating beacon only	Green	855BS-ASL3	855BM-ASL3	855BL-ASL3
		Red	855BS-ASL4	855BM-ASL4	855BL-ASL4
		Amber	855BS-ASL5	855BM-ASL5	855BL-ASL5
		Blue	855BS-ASL6	855BM-ASL6	855BL-ASL6
		Clear	855BS-ASL7	855BM-ASL7	855BL-ASL7
		Yellow	855BS-ASL8	855BM-ASL8	855BL-ASL8
	Fresnel lens for steady and flashing halogen and xenon strobe functions (not for use in LED beacons)	Green	855BS-AFL3	855BM-AFL3	855BL-AFL3
		Red	855BS-AFL4	855BM-AFL4	855BL-AFL4
		Amber	855BS-AFL5	855BM-AFL5	855BL-AFL5
		Blue	855BS-AFL6	855BM-AFL6	855BL-AFL6
		Clear	855BS-AFL7	855BM-AFL7	855BL-AFL7
		Yellow	855BS-AFL8	855BM-AFL8	855BL-AFL8
	LED lens for 90 mm beacons only	Green	855BS-ALL3	–	–
		Red	855BS-ALL4	–	–
		Amber	855BS-ALL5	–	–
		Blue	855BS-ALL6	–	–
		Clear	855BS-ALL7	–	–
		Yellow	855BS-ALL8	–	–
	Power Modules (2)	**Voltage**	**Cat. No.**	**Cat. No.**	**Cat. No.**
	Rotating power module	12V AC/DC	855BS-ARA12	855BM-ARA12	855BL-ARA12
		24V AC/DC	855BS-ARA24	855BM-ARA24	855BL-ARA24
		120V AC	855BS-ARA10	855BM-ARA10	855BL-ARA10
		240V AC	855BS-ARA20	855BM-ARA20	855BL-ARA20
	Steady power module	12V AC/DC	855BS-ADA12	855BM-ADA12	855BL-ADA12
		24V AC/DC	855BS-ADA24	855BM-ADA24	855BL-ADA24
		120V AC	855BS-ADA10	855BM-ADA10	855BL-ADA10
		240V AC	855BS-ADA20	855BM-ADA20	855BL-ADA20
	Flashing power module	12V AC/DC	855BS-AFA12	855BM-AFA12	855BL-AFA12
		24V AC/DC	855BS-AFA24	855BM-AFA24	855BL-AFA24
		120V AC	855BS-AFA10	855BM-AFA10	855BL-AFA10
		240V AC	855BS-AFA20	855BM-AFA20	855BL-AFA20
	Strobe power module	24V AC/DC	855BS-ABA24	855BM-ABA24	855BL-ABA24
		120V AC	855BS-ABA10	855BM-ABA10	855BL-ABA10
		240V AC	855BS-ABA20	855BM-ABA20	855BL-ABA20

(1) This replacement part is for use only in 120V and 240V units. For 24V units, order complete power module replacement (Cat. No. 855BM-ABA24 or Cat. No. 855BL-ABA24).
(2) All power modules include a lamp.

Table 45 - Bases and Miscellaneous Accessories and Replacement Parts

	Description	90 mm	120 mm	160 mm
	Replacement Bases	**Cat. No.**	**Cat. No.**	**Cat. No.**
	Surface mount base [1]	855BS-ABS	855BM-ABS	855BL-ABS
	1/2 in. NPT conduit mount base	855BS-ABN	855BM-ABN	855BL-ABN
	Tube mount base	855BS-ABT	855BM-ABT	855BL-ABT
	Miscellaneous Accessories and Replacement Parts	**Cat. No.**	**Cat. No.**	**Cat. No.**
	Lens gasket (must order in multiples of 5)	855BS-ALSG	855BM-ALSG	855BL-ALSG
	Surface mount gaskets (must order in multiples of 5)	855BS-ASFG	855BM-ASFG	855BL-ASFG
	Tube mount gaskets (must order in multiples of 5)	855BM-AMTG	855BM-AMTG	855BL-AMTG
	Magnetic mount	855BS-AMM	855BM-AMM	855BL-AMM
	Rough wall plate [2]	855BS-AWP	855BM-AWP	855BL-AWP
	Vertical bracket	855BS-AVM	855BM-AVM	855BL-AVM
	Screws and washers for rough wall plate and magnetic mount	855BS-ASCW	855BM-ASCW	
	Bonding kit (required for bonding between conduit connections)	855BM-ABK		

(1) When used outdoors surface mount base must be installed with rough wall plate for UL Type 4/4X/13 rating.
(2) Required for UL Type 4/4X/13 rating when using surface mount base outdoors.

Specifications

Table 46 - Technical

Attribute		Value
Housing	Base material	Polycarbonate
	Lenses (all)	Polycarbonate, red, amber, yellow, green, blue, and clear
	Pole mount base	90 mm: polycarbonate 120 mm and 160 mm: aluminum die-cast, powder-coated
	Bracket	Powder-coated steel
Protection class		Type 4/4X/13 (surface mount base must be installed with rough wall plate for Type 4/4X/13 rating), IP65
Terminals (120 mm and 160 mm only)		Up to 2.5 mm^2 (14 AWG)
Temperature Ranges	Operating	-25...+60 °C (-13...+140 °F); -25...+50 °C (-13...+122 °F), 120 mm and 160 mm steady halogen, and 120/240V AC single-color LED
	Storage	-25...+85 °C (-13...+185 °F)
Mounting	Horizontal surfaces:	Indoor — direct to the surface, outdoor — with additional metal plate between surface and base part
	Vertical surfaces	With bracket, for indoor and outdoor
	Tube or NPT conduit	For indoor and outdoor

Table 47 - Electrical and Mechanical

Attribute		Steady Halogen			Flashing Halogen			Strobe			Rotating Light		
		160 mm	120 mm	90 mm	160 mm	120 mm	90 mm	160 mm	120 mm	90 mm	160 mm	120 mm	90 mm
Halogen bulb	[W]	50	35	20	50	35	20	–	–	–	50	35	20
Bulb socket		GY6.35	GY6.35	GY6.35	GY6.35	GY6.35	GY6.35	–	–	–	GY6.35	GY6.35	GY6.35
Strobe energy	[J]	–	–	–	–	–	–	31	15	7	–	–	–
Xenon strobe tube		–	–	–				Helical	Helical	Helical	–	–	–
Strobe tube socket		–	–	–				Terminals	Terminals	Terminals	–	–	–
Flashing/strobe frequency	[Hz]	–	–	–	1	1	1	1	1	1	–	–	–
Rotating speed (selectable via jumper wire)	[rpm]	–	–	–	–	–	–	–	–	–	90/180	90/180	90/180
Nominal current [A]	12V AC/DC	4	2.9	1.6	4.2	3	1.6	–	–	–	4.2	3.2	1.8
	24V AC/DC	2.1	1.5	0.8	2.1	1.5	0.8	1.9	1.3	0.48	2.3	1.7	0.95
	110/120V AC, 50/60 Hz	0.42	0.29	0.2	0.42	0.3	0.2	0.7	0.32	0.21	0.58	0.32	0.30
	230/240V AC, 50 Hz	0.21	0.15	0.09	0.21	0.15	0.09	0.35	0.15	0.12	0.39	0.17	0.27
Weight [g]	Surface mount	900	500	251	900	500	251	900	500	296	900	500	378
	Tube mount	900	500	424	900	500	424	900	500	469	900	500	551

Attribute		90 mm		
		Single-color LED	Three-color LED	Strobe LED
Nominal current [mA]	24V AC/DC	–	155	–
	110/120V AC, 50/60 Hz	–	100	70
	230/240V AC, 50 Hz	–	105	70
	24/48V AC/DC, 50/60 Hz	230...270 (16...60V AC/16...80V DC)	–	300 (19...52V AC/16...60V DC)
	120/240V AC	38...43 mA (90...250V AC)	–	–
Weight [g]	Surface mount	250		
	Tube mount	450		

Table 48 - Standards and Certifications

Attribute	Bulletin 855B – Industrial Round Beacons
Standards Compliance	• UL 508 • EN/IEC 60947-1 • EN/IEC 60947-5-1 • CSA C22.2 No. 14
Certifications	• c-UL-us Listed (File No. E14840, Guides NKCR, NKCR7) • CE Marked

Approximate Dimensions

Dimensions in millimeters (inches). Dimensions are not intended to be used for manufacturing purposes.

Figure 5 - Bulletin 855BS — 90 mm Beacon

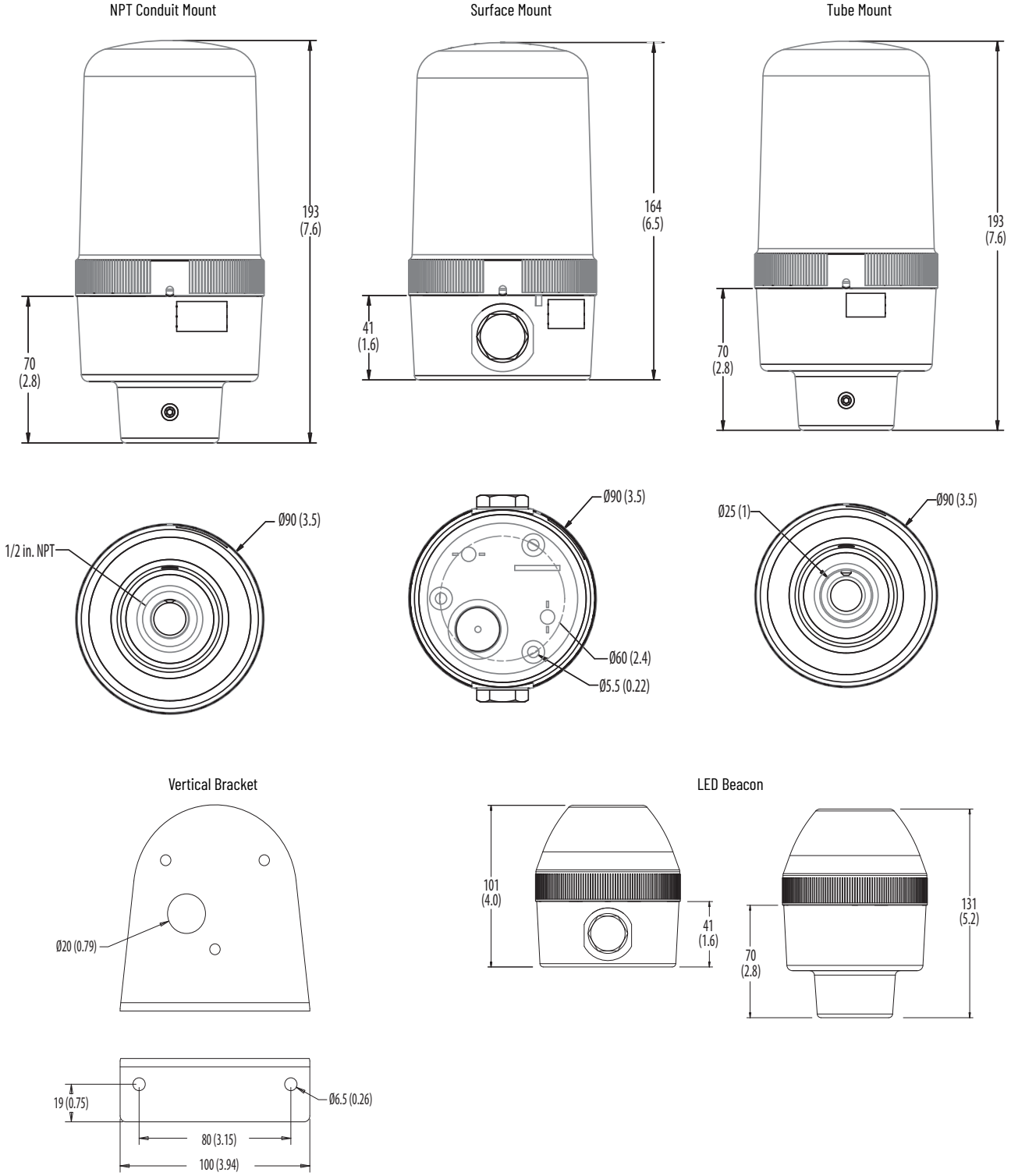

Dimensions in millimeters (inches). Dimensions are not intended to be used for manufacturing purposes.

Figure 6 - Bulletin 855BM — 120 mm Beacon

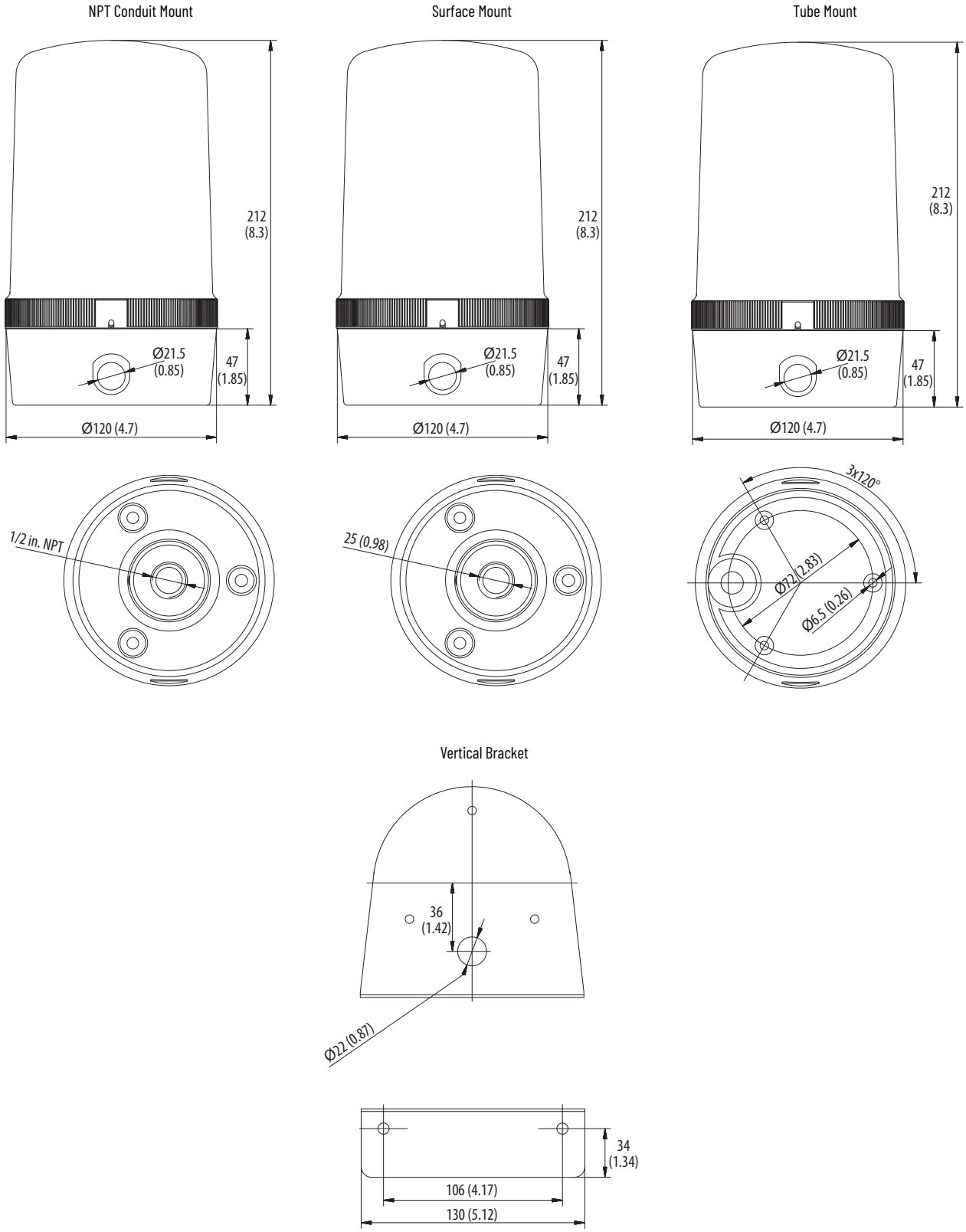

Dimensions in millimeters (inches). Dimensions are not intended to be used for manufacturing purposes.

Figure 7 - Bulletin 855BL — 160 mm Beacon

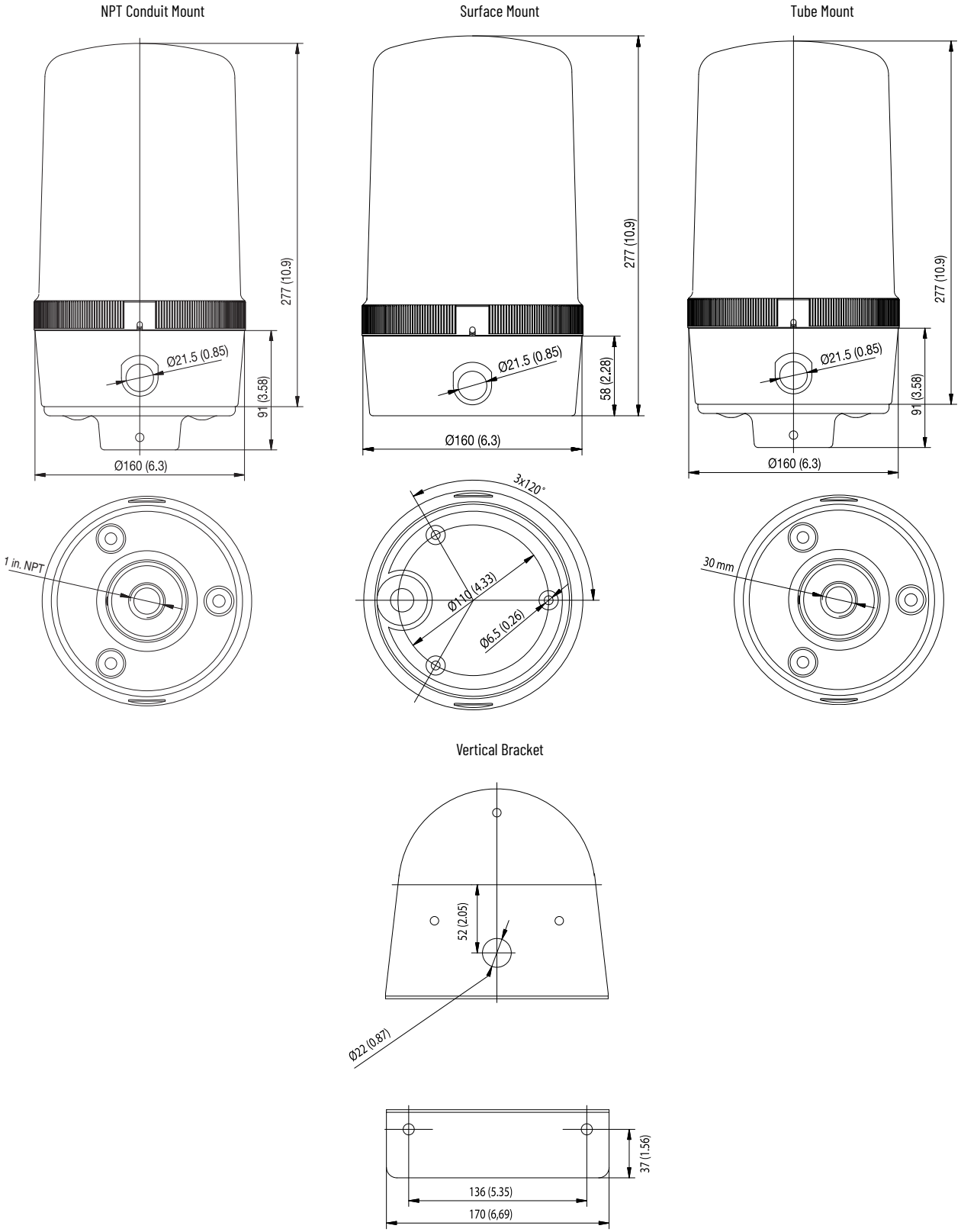

This product line includes 30 mm (855D) and 70 mm (855F) stack lights.

Bulletin 855D — 30 mm Compact Control Tower Stack Lights

These devices are available with UL Type 4/4X/13, IP65 ratings to meet the most challenging panel and on-machine applications.

Pre-assembled and Pre-wired Tower Lights, 1...5 Modules

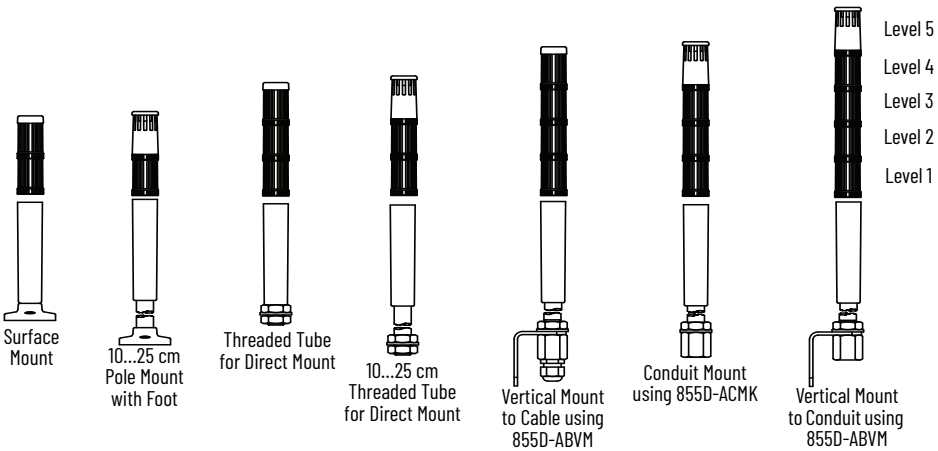

855D	-	P00		SC20	B	24	Y	3	Y	4	Y	5	L	7	P	1
		a	b	c	d	e	f	g	f	g	f	g	f	g	f	g
							(Level 1, f+g)		(Level 2, f+g)		(Level 3, f+g)		(Level 4, f+g)		(Level 5, f+g)	

a	
Base Type	
Code	**Description**
P00	Surface mount
P10	10 cm aluminum pole mount with foot
P25	25 cm aluminum pole mount with foot
T00	0 cm M20 metric threaded tube for direct mount
T10	10 cm M20 metric threaded tube for direct mount
T25	25 cm M20 metric threaded tube for direct mount
Q10	10 cm quick release mount pole
Q25	25 cm quick release mount pole

b	
Network Option	
Code	**Description**
Blank	No network option

c	
Cable Connector and Length (1)	
Code	**Description**
SC20	Stranded cable, 2 m (6.6 ft), yellow jacket
Blank	No cable (only for Q10 or Q25 base types)

(1) The SC20 cable must be ordered for all bases, except the Q10 and Q25 bases.

d	
Housing Color	
Code	**Description**
B	Black
G	Gray

e	
Voltage	
Code	**Description**
24	24V AC/DC
10	120V AC
20	240V AC

f	
Module Type (1) (2)	
Code	**Description**
Y	Steady LED
L	Flashing LED
C	Piezo sound alarm, continuous tone
P	Piezo sound alarm, pulsing tone
Q	Dual-circuit piezo sound alarm (3)

g	
Lens Color/Sound	
Code	**Description**
1	Sound module
3	Green
4	Red
5	Amber
6	Blue
7	Clear
8	Yellow

(1) Sound module types (C, P, Q) must be on the top-most level, they must be configured with Lens Color/Sound Code 1, and only one sound module is allowed per assembly.
(2) Light module types (Y, L) can only be configured with Lens Color/Sound Codes 3, 4, 5, 6, 7, or 8.
(3) If the dual-circuit sound module (Q) is selected, the maximum number of light modules that are allowed is three (two circuits are required for the dual-circuit sound module).

Accessories

	Description		Cat. No.
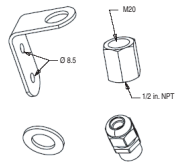	Vertical Mount Kit Includes the following: • L-bracket • Thread adapter • Black cable gland (1/2 in. NPT) • Plastic washer		855D-ABVM
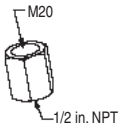	Conduit Mount Kit M20 to 1/2 in. NPT thread adapter		855D-ACMK
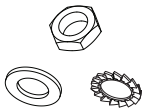	Direct Mount Kit Includes the following: • M20 nut • Plastic washer • Metal lock washer		855D-ARDM
	Base Foot Gasket (Bag of 5)		855D-APFG
	Mounting Screw Washer Kit Replacement flat washers are used to provide a seal where the mounting screw meets the pole base. (1 kit includes 20 pieces)		855T-AMSG
	Field-installable 4-pin DC Micro style terminal chamber. For additional chamber style terminals, see https://ab.rockwellautomation.com/Connection-Devices/Cables-and-Cordsets.		871A-TS4-DM
	Description	**Color**	**Cat. No.**
	Locking ring for Bulletin 854J, 855D, and 855E quick release bases	Black	855D-ABQLR
	Locking ring for quick release base	Gray	855D-AGQLR
	Internal gasket for quick release base (order quantity of 1 and receive bag of five gaskets)		855D-AQG
	Quick-release mounting base with gasket		855D-AQMB

Specifications

Table 49 - Mechanical

Standard Bases		Based on the weight and style of mounting; tower lights are subject to damage from shock and vibration. The following are reference guidelines for maximum acceptable conditions.	
		Shock [G]	Vibration [G]
Surface-mount base or 10cm or 25 cm aluminum pole base	1 module stack	150	2.5
	3 module stack	45	2.5
	5 module stack	35	2.0

Table 50 - Environmental

Attribute		Value
Ingress ratings	Light modules	IP65/UL Type 4/4X/13
	Sound modules	IP65/UL Type 4/4X/13
	Surface, pole, vertical, tube mount bases	IP65/UL Type 4/4X/13
Temperature ranges	Operating	-25...+50 °C (-13...+122 °F)
	Storage	-25...+85 °C (-13...+185 °F)

Table 51 - Materials

Part	Material
Bases, caps, lens covers, sound module housings	Polycarbonate
Rubber seals and gaskets	Nitrile rubber
Pole (for aluminum pole assembly)	Aluminum
Pole base footing (for aluminum pole base)	Polycarbonate
Insulation sleeve (for pole insulation)	PVC
Mounting screw washers	Polyamide

Table 52 - Estimated Light Output(1)

Attribute	Estimated Light Output [mcd]
Steady, flashing, red	1000
Steady, flashing, amber	800
Steady, flashing, green	1500
Steady, flashing, yellow	700
Steady, flashing, blue	250
Steady, flashing, white	1000

(1) Light output values are calculated from the LED Data Sheet and show typical values of luminous density. These values are not exact because the knurling in the lens affects the light distribution and because the viewing angle of the LED that directly relates to the Cd output value, is not identical for all LEDs.

Table 53 - Operating Voltage

Device	Operating Voltage		
	24V AC/DC	120V AC	240V AC
Light modules and sound modules	24V AC/DC (±10%)	110V AC, 50 Hz (±10%) 120V AC, 60 Hz (±10%)	230V AC, 50 (±10%) 240V AC, 60 (±10%)

Table 54 - Lamp Life Ratings (Design Life) Average Life Under Static, No Vibration, Conditions

Device	Lamp Life Rating		
	24V AC/DC	120V AC	240V AC
LED modules	100,000 hr		
Sound modules	20,000 hr		

Table 55 - Current Consumption

Device		Current Consumption [mA]		
		24V AC/DC	120V AC	240V AC
Light modules	Steady or flashing LED	20	22	21
Piezo-style sound modules	Single- and dual-circuit	40	22	21

Table 56 - Flashing Frequency (Light Only Modules)

Device	Flashing Frequency
Flashing LED modules	Approximately 2 Hz

Table 57 - Decibel Rating (Sound Modules) (1)

Device	Decibel Rating
Piezo sound module	85 dB(A) (+2 dB/-5 dB)

(1) All dB(A) ratings are determined at a distance of 1 m (3.3 ft) from the sound module.

Table 58 - Leakage Current Impact

All light and sound modules can absorb up to 3 mA of leakage current from solid-state outputs without module activation.

Table 59 - Standards and Certifications

Attribute	Bulletin 855D — 30 mm Compact Control Tower Stack Lights
Standards compliance	• UL 508 • CSA C22.2 No. 14 • EN/IEC 60947-1 • EN/IEC 60947-5-1
Certifications	• c-UL-us Listed (File No. E14840, Guides NKCR, NKCR7)

Approximate Dimensions

Dimensions in millimeters (inches). Dimensions are not intended to be used for manufacturing purposes.

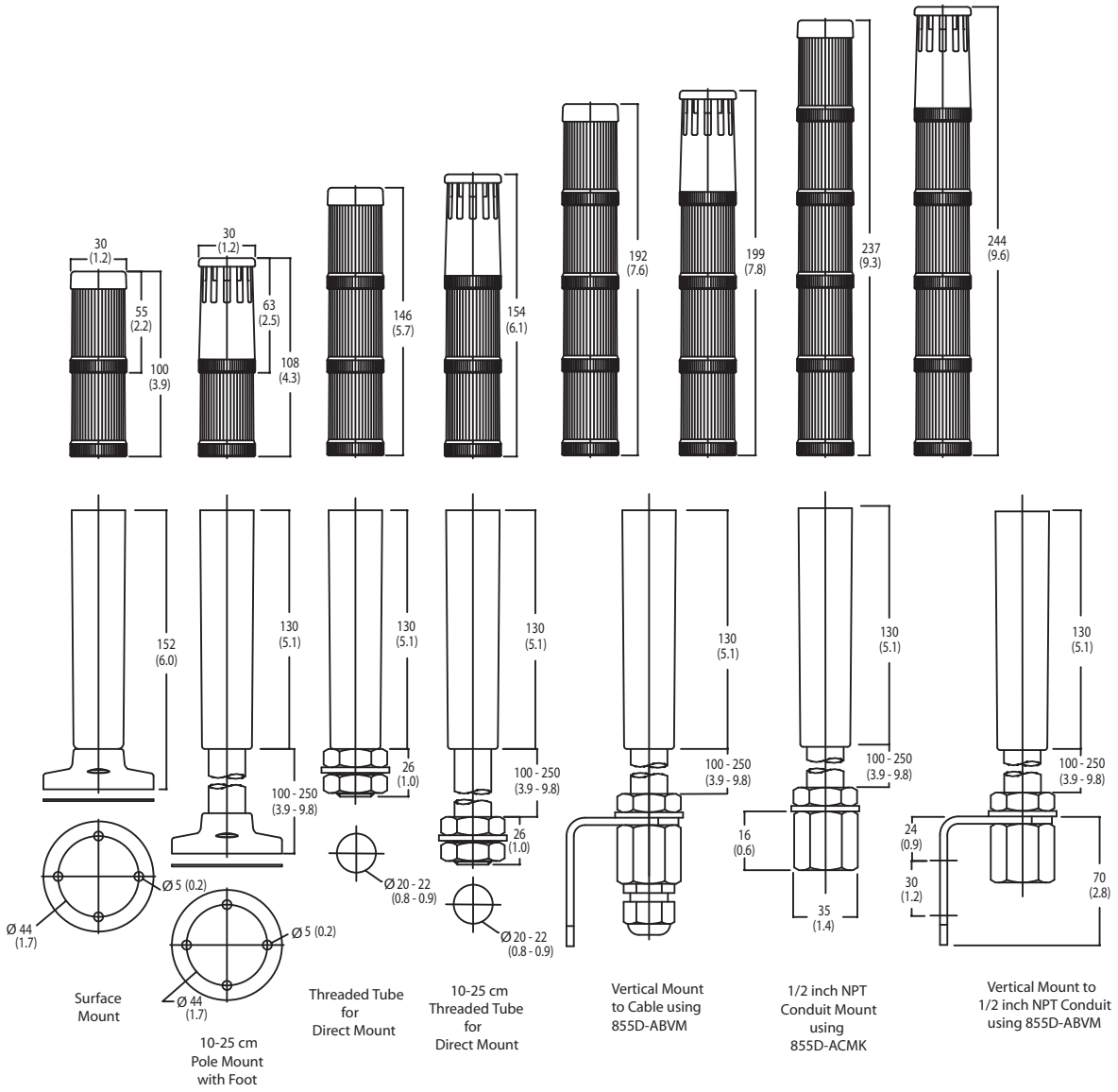

Bulletin 855F — 70 mm Compact Control Tower Stack Lights

These devices are available with UL Type 4/4X/13, IP65 ratings to meet the most challenging panel and on-machine applications.

Pre-assembled and Pre-wired Tower Lights, 1...5 Modules

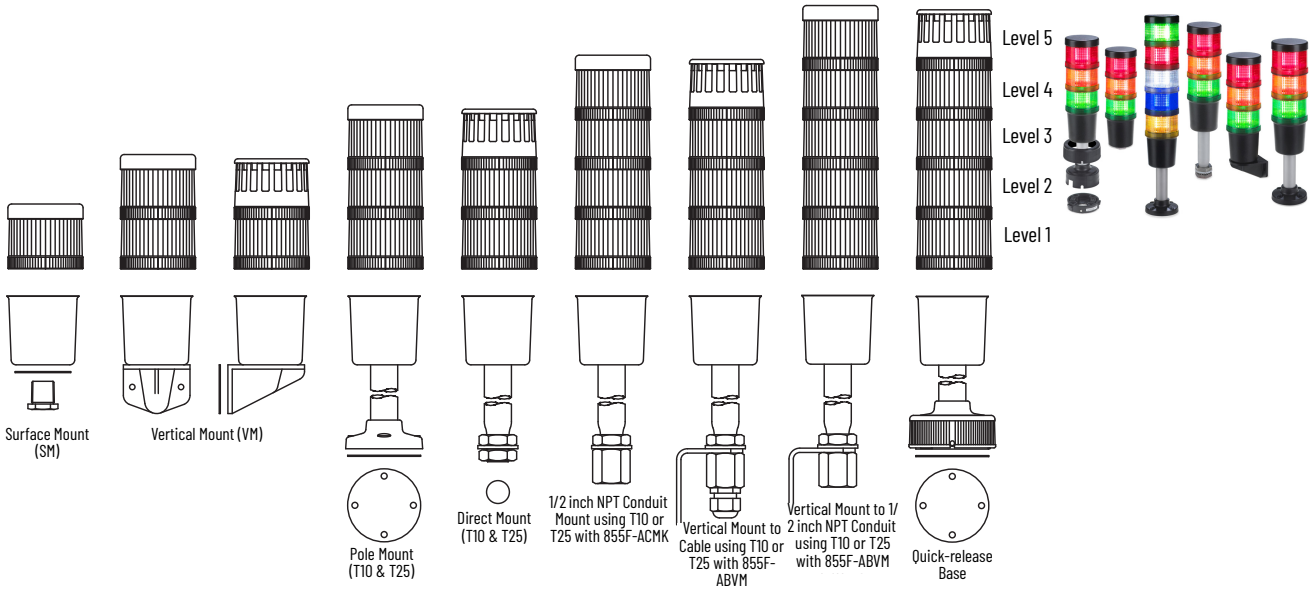

855F	-	P10	SC20	B	24	Y	3	Y	4	Y	5	L	7	P	1
		a	b	c	d	e	f	e	f	e	f	e	f	e	f
						(Level 1, e+f)		(Level 2, e+f)		(Level 3, e+f)		(Level 4, e+f)		(Level 5, e+f)	

a	
Base Type	
Code	**Description**
SB	Surface mount with 1/2 in. NPT threaded connector and mounting nut
P10	10 cm aluminum pole mount with foot
P25	25 cm aluminum pole mount with foot
T10	10 cm threaded tube for direct mount
T25	25 cm threaded tube for direct mount
VM	Vertical mount
Q10	10 cm quick release mount pole
Q25	25 cm quick release mount pole

(1) The SC20 cable must be ordered for all bases, except the Q10 and Q25 bases.

b	
Cable Connector and Length (1)	
Code	**Description**
SC20	Stranded cable, 2 m (6.6 ft), yellow jacket
Blank	No cable (only for Q10 or Q25 base types)

c	
Housing Color	
Code	**Description**
B	Black

d	
Voltage	
Code	**Description**
24	24V AC/DC
10	120V AC
20	240V AC

e	
Module Type (1) (2)	
Code	**Description**
Y	Steady LED
L	Flashing LED
C	Piezo sound alarm, continuous tone
P	Piezo sound alarm, pulsing tone
Q	Dual-circuit piezo sound alarm (3)

f	
Lens Color/Sound	
Code	**Description**
1	Sound module
3	Green
4	Red
5	Amber

f, cont'd.	
Lens Color/Sound	
Code	**Description**
6	Blue
7	Clear
8	Yellow

(1) Sound module types (C, P, Q) must be on the top-most level, they must be configured with Lens Color/Sound Code 1, and only one sound module is allowed per assembly.
(2) Light module types (Y, L) can only be configured with Lens Color/Sound codes 3, 4, 5, 6, 7, or 8.
(3) If the dual-circuit sound module (Q) is selected, the maximum number of light modules that are allowed is three (two circuits are required for the dual-circuit sound module).

Accessories

	Description	Cat. No.
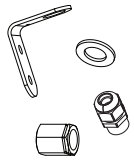	Vertical Mount Kit Includes the following: • L-bracket • Thread adapter (G1/2 in. to 1/2 in. NPT) • Black cable gland (1/2 in. NPT) • Plastic washer	855F-ABVM
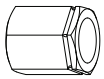	Conduit Mount Kit G1/2 in. to 1/2 in. NPT thread adapter	855F-ACMK
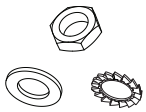	Direct Mount Kit Includes the following: • G1/2 in. nut • Plastic washer • Metal lock washer	855F-ARDM
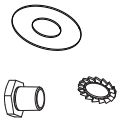	Surface Mount Kit Includes the following: • Threaded connector (1/2 in. NPT) • Surface-mount gasket • Lock washer	855F-ASMK
	Mounting Screw Washer Kit Replacement flat washers are used to provide a seal where the mounting screw meets the pole base. (1 kit includes 20 pieces)	855T-AMSG
	Field-installable 4-pin DC Micro style terminal chamber. For additional chamber style terminals, see https://www.rockwellautomation.com/en-us/products/hardware/allen-bradley/connection-devices/cables-and-cordsets.html.	871A-TS4-DM

Specifications

Table 60 - Mechanical

Standard Bases		Based on the weight and style of mounting; tower lights are subject to damage from shock and vibration. The following are reference guidelines for maximum acceptable conditions.	
		Shock [G]	Vibration [G]
Surface-mount base or 10 cm or 25 cm aluminum pole base	1 module stack	150	2.5
	3 module stack	45	2.5
	5 module stack	35	2.0

Table 61 - Environmental

Attribute		Value
Ingress ratings	Light modules	UL Type 4/4X/13, IP65
	Sound modules	UL Type 4/4X/13, IP65
	Surface, pole, vertical, tube mount bases	UL Type 4/4X/13, IP65
Temperature ranges	Operating	-25...+60 °C (-13...+140 °F)
	Storage	-25...+85 °C (-13...+185 °F)

Table 62 - Materials

Part	Material
Bases, caps, lens covers, sound module housings	Polycarbonate
Rubber seals and gaskets	Nitrile rubber
Pole (for aluminum pole assembly)	Aluminum
Pole base footing (for aluminum pole base)	Polycarbonate
Insulation sleeve (for pole insulation)	PVC
Mounting screw washers	Polyamide

Table 63 - Estimated Light Output (1)

Attribute	Estimated Light Output [mcd]
Steady, flashing, Red	1000
Steady, flashing, amber	800
Steady, flashing, green	1500
Steady, flashing, yellow	700
Steady, flashing, blue	250
Steady, flashing, white	1000

(1) Light output values are calculated from the LED Data Sheet and show typical values of luminous density. These values are not exact because the knurling in the lens affects the light distribution and because the viewing angle of the LED that directly relates to the Cd output value, is not identical for all LEDs.

Table 64 - Operating Voltage

Device	Operating Voltage		
	24V AC/DC	120V AC	240V AC
Light modules and sound modules	24V AC/DC (±10%)	110V AC, 50 Hz (±10%) 120V AC, 60 Hz (±10%)	230V AC, 50 Hz (±10%) 240V AC, 60 Hz (±10%)

Table 65 - Lamp Life Ratings (Design Life) Average Life Under Static, No Vibration, Conditions

Device	Lamp Life Rating		
	24V AC/DC	120V AC	240V AC
LED modules	100,000 hr		
Sound modules	20,000 hr		

Table 66 - Current Consumption

Device		Current Consumption [mA]		
		24V AC/DC	120V AC	240V AC
Light modules	Steady or flashing LED	20	22	21
Piezo-style sound modules	Single- and dual-circuit	53	22	21

Table 67 - Flashing Frequency (Light Only Modules)

Device	Flashing Frequency
Flashing LED modules	Approximately 2 Hz

Table 68 - Decibel Rating (Sound Modules) (1)

Device	Decibel Rating
Piezo sound module	100 dB(A) (+2 dB/-5 dB)

(1) All dB(A) ratings are determined at a distance of 1 m (3.3 ft) from the sound module.

Table 69 - Leakage Current Impact

All light and sound modules can absorb up to 3 mA of leakage current from solid-state outputs without module activation.

Table 70 - Standards and Certifications

Attribute	Bulletin 855F — 70 mm Compact Control Tower Stack Lights
Standards compliance	• UL 508 • CSA C22.2 No. 14 • EN/IEC 60947-1 • EN/IEC 60947-5-1
Certifications	• c-UL-us Listed (File No. E14840, Guides NKCR, NKCR7) • CE Marked

Approximate Dimensions

Dimensions in millimeters (inches). Dimensions are not intended to be used for manufacturing purposes.

Figure 8 - Assembled Stacks

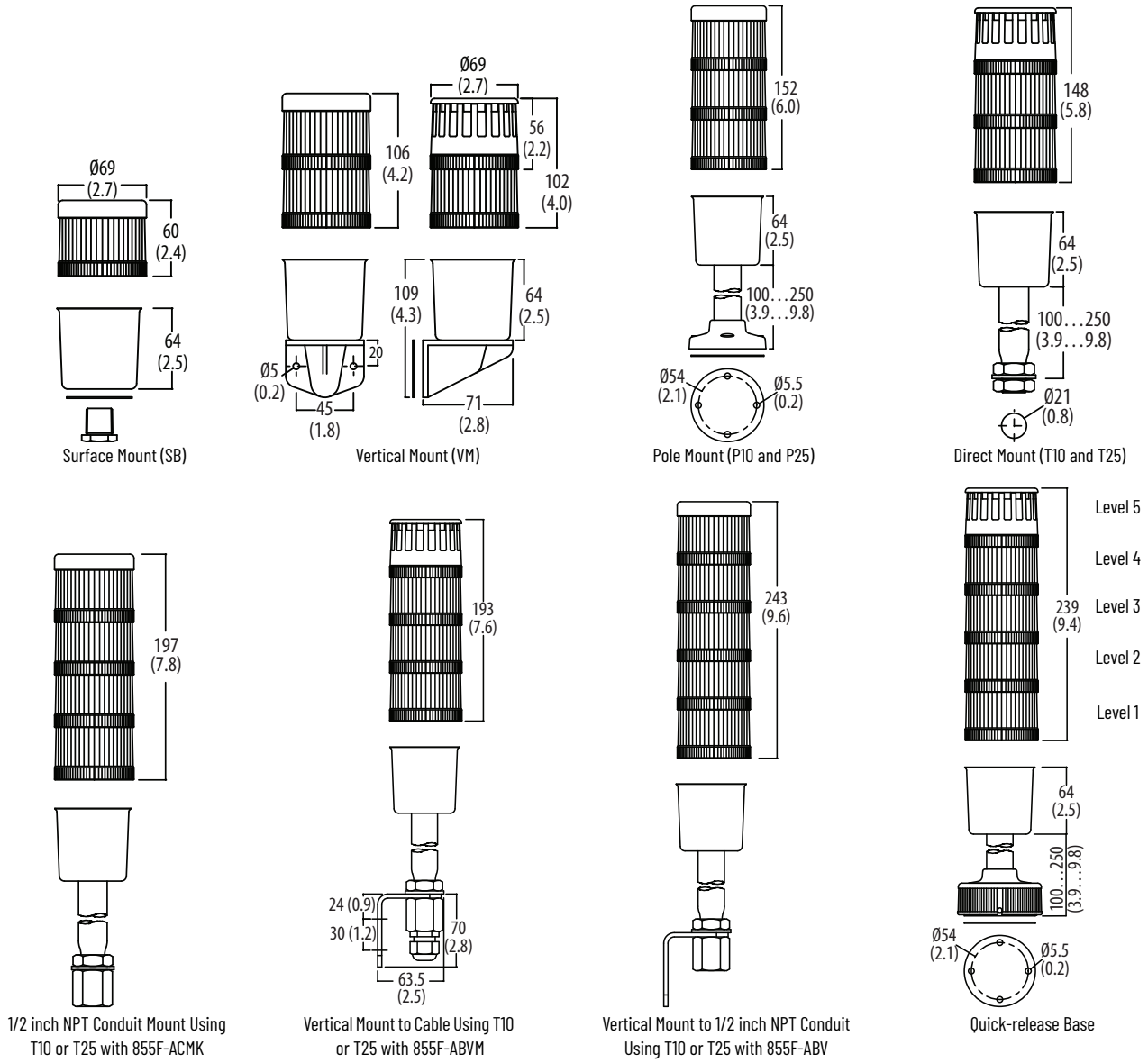

This product line includes 40 mm (854J) and 60 mm (854K) stack lights.

Bulletin 854J – 40 mm Control Tower Stack Lights

Steady LED Module

These devices provide reliable, high-performance, high-visibility machine multi-status indication in a cost-effective package. They feature IP66 enclosure rating and is rated for indoor and outdoor use, which makes them an ideal signaling solution for a broad range of applications. With a wide variety of mounting bases available, they can be installed in any orientation – vertical, sideways, or upside-down – to best suit the application. They can be preassembled to save time or ordered as separate light and sound modules for customized field assembly.

Light Modules

854J	-	10	TL	4
		a	b	c

a	
Voltage	
Code	Description
00	0...250V AC/DC (no-lamp module) (1)
24	24V AC/DC (2)
10	120V AC (2)
20	240V AC (2)

b	
Light Module Type	
Code	Description
XN	Steady no lamp (3)
TL	Steady LED
GL	Flashing LED
BL	LED strobe, single flash

c	
Lens Color	
Code	Description
3	Green
4	Red
5	Amber
6	Blue
7	Clear
8	Yellow

(1) Can only be selected with module type XN, voltage code 00. Accepts 4 W socket mount incandescent lamp types only.
(2) Not valid with module type XN.
(3) Incandescent lamps (catalog numbers 854J-L24, 854J-L10, and 854J-L20) must be purchased separately.

Voltage	Color	Steady Incandescent	Steady LED	Flashing LED	Strobe LED
		Cat. No. (1)	Cat. No.	Cat. No.	Cat. No.
0...250V AC/DC	Green	854J-00XN3	–	–	–
	Red	854J-00XN4	–	–	–
24V AC/DC	Green	–	854J-24TL3	854J-24GL3	854J-24BL3
	Red	–	854J-24TL4	854J-24GL4	854J-24BL4
	Amber	–	854J-24TL5	854J-24GL5	854J-24BL5
120V AC	Green	–	854J-10TL3	854J-10GL3	854J-10BL3
	Red	–	854J-10TL4	854J-10GL4	854J-10BL4
	Amber	–	854J-10TL5	854J-10GL5	854J-10BL5
240V AC	Green	–	854J-20TL3	854J-20GL3	854J-20BL3
	Red	–	854J-20TL4	854J-20GL4	854J-20BL4
	Amber	–	854J-20TL5	854J-20GL5	854J-20BL5

(1) No lamp included; must be ordered separately

Sound Modules

Sound modules have continuous and pulsing tones selectable via DIP switch. Maximum sound output is 80 dB(A) at 1 meter (3.3 feet).

Sound Module

854J	-	B	10	SA3
		a	b	c

a	
Housing Color	
Code	**Description**
B	Black

b	
Light Module Type	
Code	**Description**
24	24V AC/DC
10	120V AC
20	240V AC

c	
Module Type	
Code	**Description**
SA3	Single-circuit piezo-style steady/pulsing DIP switch selectable

Voltage	Housing Color	Module Type	Cat. No.
24V AC/DC	Black	Single-circuit sounder, single tone	854J-B24SA3
120V AC			854J-B10SA3
240V AC			854J-B20SA3

Standard Stack Light Bases

Surface-mount Base with External Holes | Vertical-mount Base | Pole-mount Base | Double-sided Base | Threaded Tube Base | 1/2 in. NPT Base | Quick Release Base | Flange Style with M12 Micro Connector (Male)

854J - B VM C

a b c

a	
Housing Color	
Code	**Description**
B	Black

b	
Base Type (1)	
Code	**Description**
NPT	1/2 in. NPT
VM	Vertical mount
SH	Surface mount, preinstalled mounting hardware
SF	Surface mount, external mounting holes
PM10	10 cm (3.9 in.) aluminum pole mount base
PM25	25 cm (9.8 in.) aluminum pole mount base
T10	10 cm (3.9 in.) threaded tube (M20)
T25	25 cm (9.8 in.) threaded tube (M20)
DS	Double-sided base (2)
Q10	10 cm (3.9 in.) quick release base
Q25	25 cm (9.8 in.) quick release base
SFQD5	Flange-style base with M12 (5-pin DC) micro connector (3) (4) (5) (6) (7)

c	
Cap Option	
Code	**Description**
C	Cap included

(1) PM10, PM25, T10, T25, Q10, and Q25 bases have powder-coated aluminum tubes
(2) Double-sided base can accommodate up to ten modules per base that are divided in two groups up to five levels each.
(3) For vertical mounting of the base use Cat. No. 855T-AVM.
(4) Maximum number of levels that are allowed in the stack is four.
(5) For use with Bulletin 889D cordsets.
(6) Cannot be used with 10 cm plastic base extension (Cat. No. 854J-ABBE).
(7) Maximum 250V AC/DC UL / 60V AC/DC IEC.

Housing Color	Base Type	Cat. No. (1)
Black	1/2 in. NPT thread	854J-BNPTC
	Vertical mount	854J-BVMC
	Surface mount — pre-installed hardware	854J-BSHC
	Surface mount — external mounting holes	854J-BSFC
	10 cm (3.9 in.) aluminum pole mount	854J-BPM10C
	25 cm (9.8 in.) aluminum pole mount	854J-BPM25C
	10 cm (3.9 in.) threaded tube (M20)	854J-BT10C
	25 cm (9.8 in.) threaded tube (M20)	854J-BT25C
	Double-sided base	854J-BDSC
	10 cm (3.9 in.) quick release base	854J-BQ10C
	25 cm (9.8 in.) quick release base	854J-BQ25C
	Flange-style base with M12 (5-pin DC) micro connector	854J-BSFQD5C

(1) All listed bases include a cap.

Pre-configured Tower Lights, 1...5 Modules

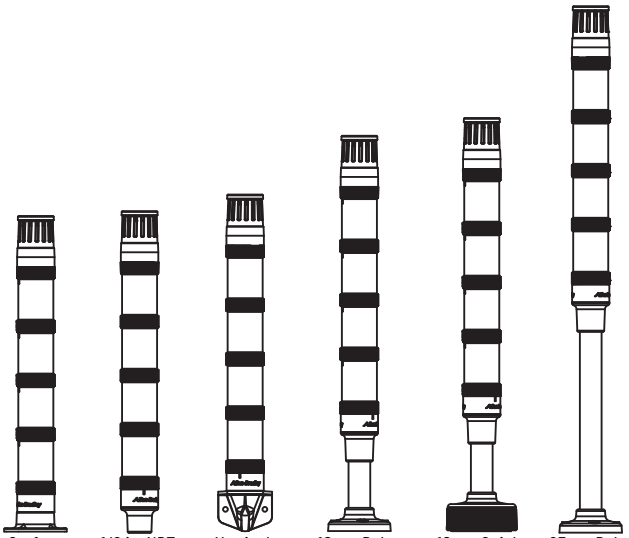

Surface Mount | 1/2 in. NPT Thread | Vertical Mount | 10 cm Pole Mount | 10 cm Quick Release | 25 cm Pole Mount

854JC	-	SF	B	10	Y	3	L	5	B	3	L	7	Y	6
		a		b	c	d	c	d	c	d	c	d	c	d
					(Level 1, c+d)		(Level 2, c+d)		(Level 3, c+d)		(Level 4, c+d)		(Level 5, c+d)	

a	
Base Type [1]	
Code	**Description**
NPT	1/2 in. NPT
VM	Vertical mount
SF	Surface mount —external mounting holes
P10	10 cm (3.9 in.) aluminum pole mount with foot
P25	25 cm (9.8 in.) aluminum pole mount with foot
Q10	10 cm (3.9 in.) quick release mount pole
Q25	25 cm (9.8 in.) quick release mount pole

b	
Voltage	
Code	**Description**
24	24V AC/DC
10	120V AC

c	
Module Type	
Code	**Description**
Y	Steady LED
L	Flashing LED
B	Strobe LED—single flash
P	Piezo sound alarm, continuous/pulsing tone

d	
Lens Color/Sound	
Code	**Description**
1	Sound module [2]
3	Green
4	Red
5	Amber
6	Blue
7	Clear
8	Yellow

(1) P10, P25, Q10, Q25 bases have powder-coated aluminum tubes.
(2) Sound module option can only be selected with Module Type option P (Table c). They must be in the top position of the stack.

Accessories

Table 71 - Accessories

	Description		Cat. No.
	Incandescent Lamps (4 W)	24V AC/DC	854J-L24
		120V AC	854J-L10
		240V AC	854J-L20
	Incandescent lamp removal tool		800T-N82
	10 cm plastic base extension, black		854J-ABBE
	Plastic vertical bracket for pole foot, black (can be used with Bulletin 855T, 855E, 854K, and 855F pole bases)		854J-ABPB
	O-rings for lenses		854J-ALSG
	O-rings for bases		854J-ABSG
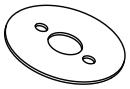	Gasket for SH surface mount bases		854J-ASG2
	Upper base with terminal block, black		854J-ABUB
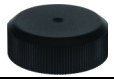	Cap, black		854J-ABCAP
	Conduit mount adapter for threaded tube base (1/2 in. NPT to M20x1.5)		854J-ACMK
	L-bracket for threaded tube base (vertical mount kit)		854J-ABVM
	Direct mount kit for threaded tube base		854J-ARDM

Table 72 - Replacement Parts

	Description	Cat. No.
	Vertical Mount Gasket Replacement flat gasket is to be placed between the mounting surface and the vertical mount base (Cat. No. 854J-BVMC).	855T-AVFG
	Pole Foot Gasket Replacement flat gasket is to be placed between the mounting surface and the pole base bottom foot. (Must order multiples of 5.) For use with Cat. No. 855T-BPM10C and 855T-BPM25C pole bases, Cat. No. 854J-BSFC and 854J-BSFQD5C bases, and Bul. 855T, 855E, 855F, 855D, 854J, and 854K quick release bases.	855T-APFG
	Mounting Screw Washer Kit Replacement flat washers are used to provide a seal where the mounting screw meets the pole base. (1 kit includes 20 pieces)	855T-AMSG
	Locking ring for Bulletin 854J, 855D, and 855E quick release bases	855D-ABQLR
	Internal gasket for quick release base (order quantity of 1 and receive bag of five gaskets)	855D-AQG
	Quick-release mounting base with gasket	855D-AQMB

Specifications

Table 73 - Mechanical

Standard Bases		Based on the weight and style of mounting; tower lights are subject to damage from shock and vibration. The following are reference guidelines for maximum acceptable conditions.	
		Shock [G]	Vibration [G]
Surface-mount base or 10 cm (3.9 in.) aluminum pole base	1 module stack	50	5
	3 module stack	50	5
	5 module stack	40	5
Vertical base or 25 cm (9.8 in.) aluminum pole base	1 module stack	55	5
	3 module stack	55	5
	5 module stack	35	5
Recommended wire size		0.2...1.5 mm^2 (24...16 AWG)	
Recommended terminal torque		Screwless terminal blocks	

Table 74 - Environmental

Attribute		Value
Ingress ratings	Light modules	UL Type 4/4X/13, IP66
	Sound modules	
	Surface, vertical, tube mount bases	
	Pole-mount bases	
	Flange-style base with M12 micro connector (1)	
Temperature ranges	Operating	-30...+60 °C (-22...+140 °F) For Cat. No. 854J-BSFQD5C only: -30...+45 °C (-22...+113 °F)
	Storage	-30...+85 °C (-22...+185 °F)

(1) UL Type 1 when used with Cat. No. 855T-AVM mounting bracket.

Table 75 - Materials

Part	Material
Bases, caps, lens covers, sound module housings	Polycarbonate
Lamp socket	Polycarbonate
Rubber seals and gaskets	Nitrile rubber
Pole (for aluminum pole assembly)	Aluminum
Pole base footing (for aluminum pole base)	Polycarbonate
Mounting screw washers	Polypropylene

Table 76 - Estimated Light Output

Device		Estimated Light Output [mcd]	
		24V AC/DC	120V AC, 240V AC
Strobe LED	Red	4430	3915
	Green	4216	4080
	Amber	4430	3915
	Blue	1673	1619
	White	4464	4320
	Yellow	3715	3283
Steady/flashing LED	Red	1793	2392
	Green	1714	3400
	Amber	1793	2391
	Blue	680	1349
	White	1814	3600
	Yellow	1503	2006

Table 77 - Operating Voltage

Device	Operating Voltage		
	24V AC/DC	120V AC	240V AC
Light modules and sound modules	24V AC/DC (±10%)	110V AC, 50 Hz (±10%) 120V AC, 60 Hz (±10%)	230V AC, 50 Hz (±10%) 240V AC, 60 Hz (±10%)

Table 78 - Lamp Life Ratings (Design Life) Average Life Under Static, No Vibration, Conditions

Device	Lamp Life Rating		
	24V AC/DC	120V AC	240V AC
LED modules	50,000 hr		
Sound modules	20,000 hr		

Table 79 - Current Consumption [mA]

Device		Current Consumption [mA]		
		24V AC/DC	120V AC	240V AC
Light only modules	Steady LED	22 (red, amber, and yellow) 33 (green, blue, and white)	30 (red, amber, and yellow) 29 (green, blue, and white)	
	Flashing LED	28 (red, amber, and yellow) 36 (green, blue, and white)	30 (red, amber, and yellow) 29 (green, blue, and white)	
	Strobe LED	35 (red, amber, and yellow) 65 (green, blue, and white)	10	
Sound modules	Single-tone	65	31	32

Table 80 - Flashing Frequency (Light Only Modules)

Device	Flashing Frequency
Flashing LED Modules	Approximately 1.5 Hz; Time On/Time OFF = 1:1
LED Strobe Modules	Approximately 2 Hz (flash duration 1/50,000 second)

Table 81 - Decibel Rating (Sound Modules) (1)

Device	Decibel Rating
Single-tone sound module	80 dB(A) (non-adjustable)
Tone frequency	Preset at 2500 Hz

(1) All dB(A) ratings are determined at a distance of 1 m (3.3 ft) from the sound module.

Table 82 - Leakage Current Impact

All light and sound modules can absorb up to 3 mA of leakage current from solid-state outputs without module activation.

Table 83 - Standards and Certifications

Attribute	Bulletin 854J — 40 mm Control Tower Stack Lights
Standards compliance	• UL 508 • CSA C22.2 No. 14 • EN/IEC 60947-1 • EN/IEC 60947-5-1
Certifications	• c-UL-us Listed (File No. E14840, Guides NKCR, NKCR7) • CE Marked • RoHS Compliant

Approximate Dimensions

Dimensions in millimeters (inches). Dimensions are not intended to be used for manufacturing purposes.

Light Module

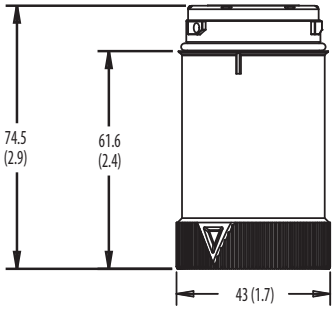

Sound Module

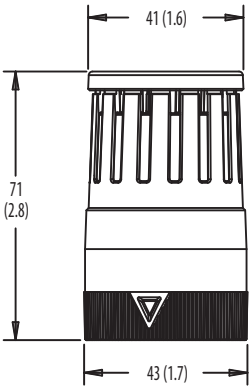

Cap

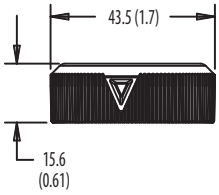

Surface-mount Base

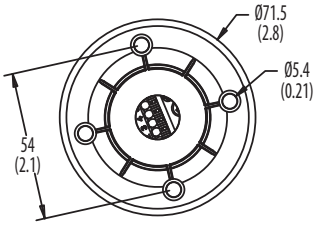

External Mounting Holes

Vertical-mount Base

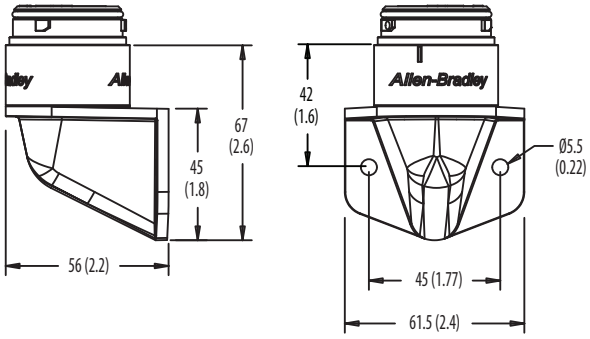

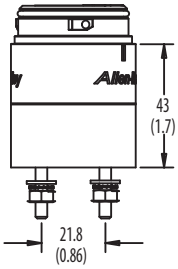

Pre-installed Hardware

Dimensions in millimeters (inches). Dimensions are not intended to be used for manufacturing purposes.

Quick-release Base

10 cm Base

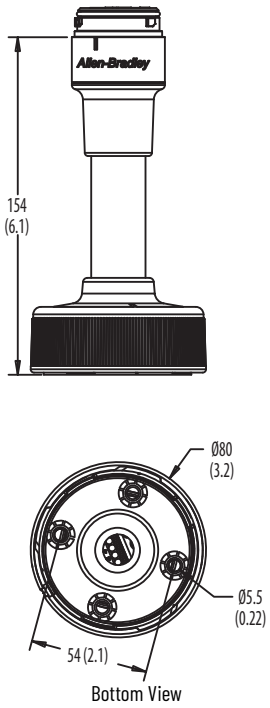

25 cm Base

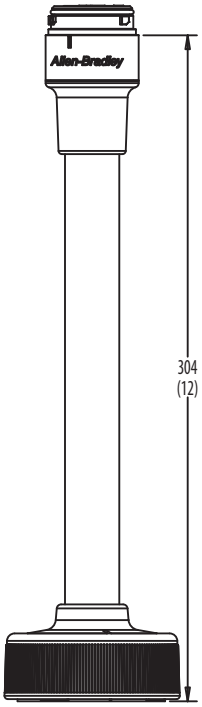

Pole-mount Base

10 cm Base

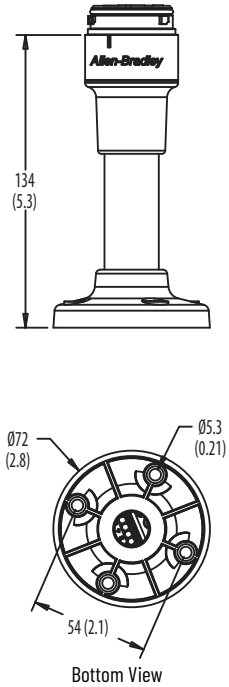

25 cm Base

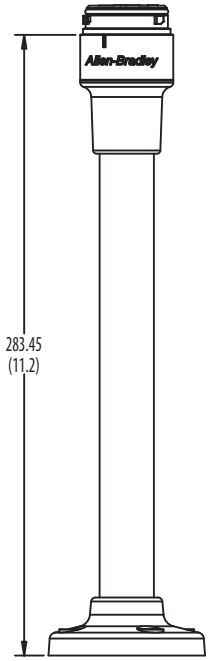

1/2 in. NPT Thread Base

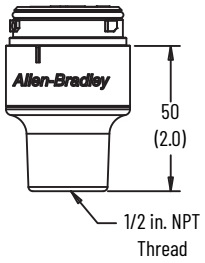

Double-sided Base

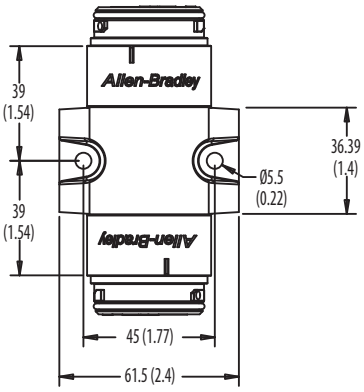

Flange-style Base with M12 Micro Connector (Male)

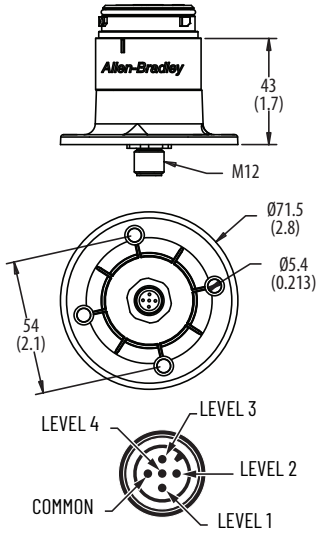

5-pin DC Micro Configuration

Bulletin 854K — 60 mm Control Tower Stack Lights

Steady LED Module

These devices are designed to communicate application status, alerting you to critical equipment and system needs on the plant floor. They feature an IP66 enclosure rating and is rated for indoor and outdoor use, which makes them an ideal signaling solution for a broad range of applications. With a wide variety of mounting bases available, they can be installed in any orientation — vertical, sideways, or upside-down — to best suit the application. They can be preassembled to save time or ordered as separate light and sound modules for customized field assembly.

Light Modules

854K	-	10	TL	4
		a	b	c

a	
Voltage	
Code	Description
00	0...250V AC/DC (no lamp module) (1)
24	24V AC/DC (2)
10	120V AC (2)
20	240V AC (2)

b	
Light Module Type	
Code	Description
XN	Steady no lamp (3)
TL	Steady socket-mount LED
GL	Flashing socket-mount LED
BL	LED strobe, single flash

c	
Lens Color	
Code	Description
3	Green
4	Red
5	Amber
6	Blue
7	Clear
8	Yellow

(1) Can only be selected with module type XN, voltage code 00. Accepts socket mount incandescent lamp types only.
(2) Not valid with module type XN (Table b).
(3) Incandescent lamps (catalog numbers 854J-L24, 854J-L10, and 854J-L20) must be purchased separately.

Voltage	Color	Steady Incandescent	Steady LED	Flashing LED	Strobe LED
		Cat. No. (1)	Cat. No.	Cat. No.	Cat. No.
0...250V AC/DC	Green	854K-00XN3	—	—	—
	Red	854K-00XN4	—	—	—
24V AC/DC	Green	—	854K-24TL3	854K-24GL3	854K-24BL3
	Red	—	854K-24TL4	854K-24GL4	854K-24BL4
	Amber	—	854K-24TL5	854K-24GL5	854K-24BL5
120V AC	Green	—	854K-10TL3	854K-10GL3	854K-10BL3
	Red	—	854K-10TL4	854K-10GL4	854K-10BL4
	Amber	—	854K-10TL5	854K-10GL5	854K-10BL5
240V AC	Green	—	854K-20TL3	854K-20GL3	854K-20BL3
	Red	—	854K-20TL4	854K-20GL4	854K-20BL4
	Amber	—	854K-20TL5	854K-20GL5	854K-20BL5

(1) No lamp included; must be ordered separately

Sound Modules

Sound modules have continuous and pulsing tones selectable via DIP switch. Maximum sound output is 90 dB(A) at 1 m (3.3 ft) and the volume is adjustable.

Sound Module

854K	-	B	10	SA3
		a	b	c

a	
Housing Color	
Code	**Description**
B	Black

b	
Voltage	
Code	**Description**
24	24V AC/DC
10	120V AC
20	240V AC

c	
Module Type	
Code	**Description**
SA3	Single-circuit/single-tone piezo-style steady/pulsing DIP switch selectable

Voltage	Housing Color	Module Type	Cat. No.
24V AC/DC	Black	Single-circuit sounder, single tone	854K-B24SA3
120V AC			854K-B10SA3
240V AC			854K-B20SA3

Standard Stack Light Bases

Surface-mount Base with External Holes

Vertical-mount Base

Pole-mount Base

Double-sided Base

Threaded Tube Base

1/2 in. NPT Base

Quick-release Base

Flange-style with M12 Micro Connector (Male)

854K - B VM C

a b c

a	
Housing Color	
Code	**Description**
B	Black

b	
Base Type [1]	
Code	**Description**
NPT	1/2 in. NPT threading
VM	Vertical mount
SH	Surface mount, preinstalled mounting hardware
SF	Surface mount, external mounting holes
PM10	10 cm (3.9 in.) aluminum pole-mount base
PM25	25 cm (9.8 in.) aluminum pole-mount base
T10	10 cm (3.9 in.) threaded tube (M20)
T25	25 cm (9.8 in.) threaded tube (M20)
DS	Double-sided base [2]
Q10	10 cm (3.9 in.) quick-release base
Q25	25 cm (9.8 in.) quick-release base
SFQD5	Flange-style base with M12 (5-pin DC) micro connector[3] [4] [5] [6] [7]

c	
Cap Option	
Code	**Description**
C	Cap included

(1) PM10, PM25, T10, T25, Q10, and Q25 bases have powder-coated aluminum tubes.
(2) Double-sided base can accommodate up to ten modules per base that are divided in two groups up to five levels each.
(3) For vertical mounting of the base use catalog number 854K-AVM.
(4) Maximum number of levels that are allowed in the stack is four.
(5) For use with Bulletin 889D cordsets.
(6) Cannot be used with 10 cm plastic base extension (catalog number 854K-ABBE).
(7) Maximum 250V AC/DC UL / 60V AC/DC IEC.

Housing Color	Base Type	Cat. No. [1]
Black	1/2 in. NPT thread	854K-BNPTC
	Vertical mount	854K-BVMC
	Surface mount — pre-installed hardware	854K-BSHC
	Surface mount — external mounting holes	854K-BSFC
	10 cm (3.9 in.) aluminum pole mount	854K-BPM10C
	25 cm (9.8 in.) aluminum pole mount	854K-BPM25C
	10 cm (3.9 in.) threaded tube (M20)	854K-BT10C
	25 cm (9.8 in.) threaded tube (M20)	854K-BT25C
	Double-sided base	854K-BDSC
	10 cm (3.9 in.) quick release base	854K-BQ10C
	25 cm (9.8 in.) quick release base	854K-BQ25C
	Flange-style base with M12 (5-pin DC) micro connector	854K-BSFQD5C

(1) All listed bases include a cap.

Preconfigured Tower Lights, 1...5 Modules

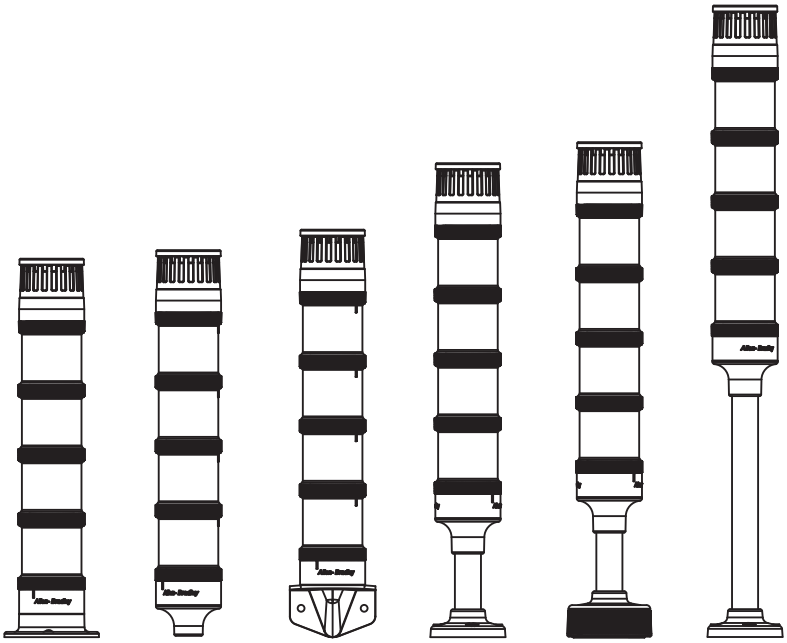

Surface Mount | 1/2 in. NPT Thread | Vertical Mount | 10 cm Pole Mount | 10 cm Quick Release | 25 cm Pole Mount

854KC	-	SF	B	10	Y	3	L	5	B	3	L	7	Y	6
		a		b	c	d	c	d	c	d	c	d	c	d
					(Level 1, c+d)		(Level 2, c+d)		(Level 3, c+d)		(Level 4, c+d)		(Level 5, c+d)	

a	
Base Type [1]	
Code	**Description**
NPT	1/2 in. NPT
VM	Vertical mount
SF	Surface mount — external mounting holes
P10	10 cm aluminum pole mount
P25	25 cm aluminum pole mount
Q10	10 cm quick release base
Q25	25 cm quick release base

b	
Voltage	
Code	**Description**
24	24V AC/DC
10	120V AC

c	
Module Type	
Code	**Description**
Y	Steady LED
L	Flashing LED
B	Strobe
P	Single-circuit piezo sound module

d	
Lens Color/Sound	
Code	**Description**
1	Sound module [2]
3	Green
4	Red
5	Amber
6	Blue
7	Clear
8	Yellow

(1) P10, P25, Q10, and Q25 bases have powder-coated aluminum tubes.
(2) Sound module option can only be selected with Module Type option P (Table c). They must be in the top position of the stack.

Accessories

Table 84 - Accessories

	Description		Cat. No.
	Incandescent Lamps (4 W)	24V AC/DC	854J-L24
		120V AC	854J-L10
		240V AC	854J-L20
	Incandescent lamp removal tool		800T-N82
	10 cm plastic base extension, black		854K-ABBE
	O-rings for lenses		854K-ALSG
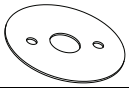	Gasket for SH surface mount bases		854K-ASG2
	Upper base with terminal block, black		854K-ABUB
	Cap, black		854K-ABCAP
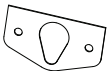	Gasket for vertical mount bases		854K-AVFG
	Gasket for surface mount base with external mounting holes		854K-ASG4
	Vertical mounting bracket for flange-style base (Cat. No. 854K-BSFQD5C) or surface mount base (Cat. No. 854K-BSFC)		854K-AVM

Table 85 - Replacement Parts

	Description	Cat. No.
	Mounting Screw Washer Kit Replacement flat washers are used to provide a seal where the mounting screw meets the pole base. (1 kit includes 20 pieces)	855T-AMSG
	Pole Foot Gasket Replacement flat gasket is to be placed between the mounting surface and the pole base bottom foot. (Must order multiples of 5.) For use with Cat. No. 855T-BPM10C and 855T-BPM25C pole bases, Cat. No. 854J-BSFC and 854J-BSFQD5C bases, and Bul. 855T, 855E, 855F, 855D, 854J, and 854K quick release bases.	855T-APFG
	Locking ring for Bulletin 854J, 855D, and 855E quick release bases	855D-ABQLR
	Internal gasket for quick release base (order quantity of one and receive bag of five gaskets)	855D-AQG
	Quick-release mounting base with gasket	855D-AQMB
	Conduit mount adapter for threaded tube base (1/2 in. NPT to M20x1.5)	854J-ACMK
	L-bracket for threaded tube base (vertical mount kit)	854J-ABVM
	Direct mount kit for threaded tube base	854J-ARDM
	Plastic vertical bracket for pole foot, black (can be used with Bul. 855T, 855E, 854K, and 855F pole bases)	854J-ABPB

Specifications

Table 86 - Mechanical

Standard Bases		Based on the weight and style of mounting; tower lights are subject to damage from shock and vibration. The following are reference guidelines for maximum acceptable conditions.	
		Shock [G]	Vibration [G]
Surface-mount base with external holes or 10 cm (3.9 in.) aluminum pole base	1 module stack	50	5
	3 module stack	50	5
	5 module stack	40	5
Vertical base or 25 cm (9.8 in.) aluminum pole base	1 module stack	55	5
	3 module stack	55	5
	5 module stack	35	5
Recommended wire size		0.2...1.5 mm^2 (24...16 AWG)	
Recommended terminal torque		Screwless terminal blocks	

Table 87 - Environmental

Attribute		Value
Ingress ratings	Light modules with cap	UL Type 4/4X/13, IP66
	Sound modules	UL Type 4/4X/13, IP66
	Surface, vertical, tube mount bases	UL Type 4/4X/13, IP66
	Pole-mount bases	UL Type 4/4X/13, IP66
	Flange-style base with M12 micro connector(1)	UL Type 4/4X/13, IP66
Temperature ranges	Operating	-30...+60 °C (-22...+140 °F) For Cat. No. 854J-BSFQD5C only: -30...+45 °C (-22...+113 °F)
	Storage	-30...+85 °C (-22...+185 °F)

(1) UL Type 1 when used with Cat. No. 855K-AVM mounting bracket.

Table 88 - Materials

Part	Material
Bases, caps, lens covers, sound module housings, lenses	Polycarbonate
Lamp socket	Polycarbonate
Rubber seals and gaskets	Nitrile rubber
Pole (for aluminum pole assembly)	Aluminum
Pole base footing (for aluminum pole base)	Polycarbonate
Mounting screw washers	Polypropylene

Table 89 - Light Output

Device		Light Output [mcd]	
		24V AC/DC	120V AC, 240V AC
Strobe LED	Red	4430	3915
	Green	4216	4080
	Amber	4430	3915
	Blue	1673	1619
	White	4464	4320
	Yellow	3715	3283
Steady/flashing LED	Red	1793	2392
	Green	1714	3400
	Amber	1793	2392
	Blue	680	1349
	White	1814	3600
	Yellow	1503	2006

Table 90 - Operating Voltage

Device	Operating Voltage		
	24V AC/DC	120V AC	240V AC
Light modules and sound modules	24V AC/DC (±10%)	110V AC, 50 Hz (±10%) 120V AC, 60 Hz (±10%)	230V AC, 50 Hz (±10%) 240V AC, 60 Hz (±10%)

Table 91 - Lamp Life Ratings (Design Life) Average Life Under Static, No Vibration, Conditions

Device	Lamp Life Rating		
	24V AC/DC	120V AC	240V AC
LED modules	50,000 hr		
Sound modules	20,000 hr		

Table 92 - Current Consumption

Device		Current Consumption [mA]		
		24V AC/DC	120V AC	240V AC
Light only modules	Steady LED	22 (red, amber, and yellow) 33 (green, blue, and white)	30 (red, amber, and yellow) 29 (green, blue, and white)	
	Flashing LED	28 (red, amber, and yellow) 36 (green, blue, and white)	30 (red, amber, and yellow) 29 (green, blue, and white)	
	Strobe LED	35 (red, amber, and yellow) 65 (green, blue, and white)	10	
Sound modules	Single-tone	65	31	32

Table 93 - Flashing Frequency (Light Only Modules)

Device	Flashing Frequency
Flashing LED modules	Approximately 1.5 Hz; Time On/Time OFF = 1:1
LED strobe modules	Approximately 2 Hz (flash duration 1/50,000 second)

Table 94 - Tone Frequency

Attribute	Value
Tone frequency	Preset at 2500 Hz

Table 95 - Decibel Rating (Sound Modules) (1)

Device	Decibel Rating
Single-tone sound module (SA3)	Maximum volume output is 80 dB(A) (non-adjustable)

(1) All dB(A) ratings are determined at a distance of 1 m (3.3 ft) from the sound module.

Table 96 - Leakage Current Impact

All light and sound modules can absorb up to 3 mA of leakage current from solid-state outputs without module activation.

Table 97 - Standards and Certifications

Attribute	Bulletin 854K — 60 mm Control Tower Stack Lights
Standards compliance	• UL 508 • CSA C22.2 No. 14 • EN/IEC 60947-1 • EN/IEC 60947-5-1
Certifications	• c-UL-us Listed (File No. E14840, Guides NKCR, NKCR7) • CE Marked • RoHS Compliant

Approximate Dimensions

Dimensions in millimeters (inches). Dimensions are not intended to be used for manufacturing purposes.

Light Module

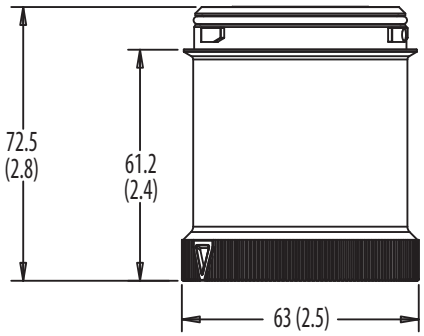

Sound Module

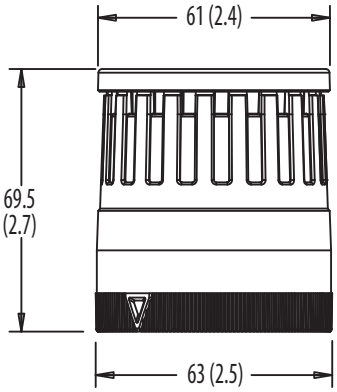

Cap

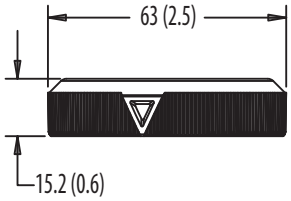

Vertical-mount Base

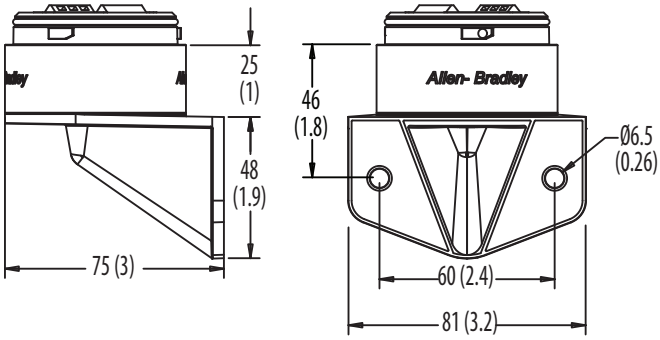

Surface-mount Base

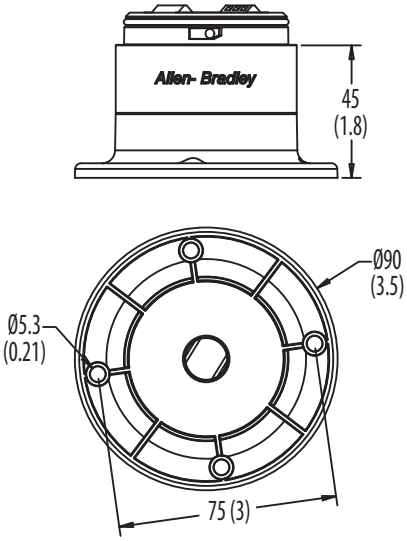

External Mounting Holes

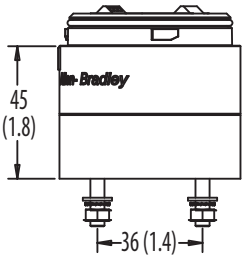

Pre-installed Hardware

Dimensions in millimeters (inches). Dimensions are not intended to be used for manufacturing purposes.

Quick-release Base

10 cm Base

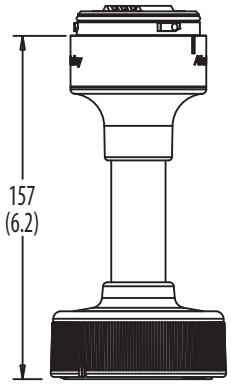

25 cm Base

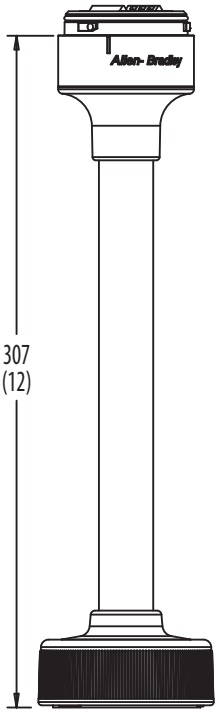

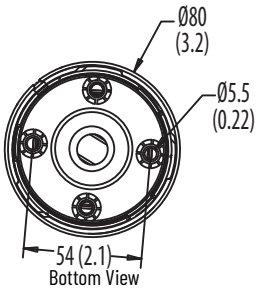

Pole-mount Bases

10 cm Base

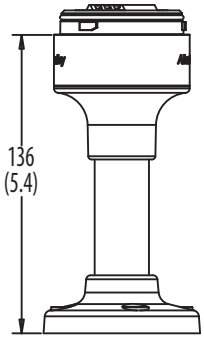

25 cm Base

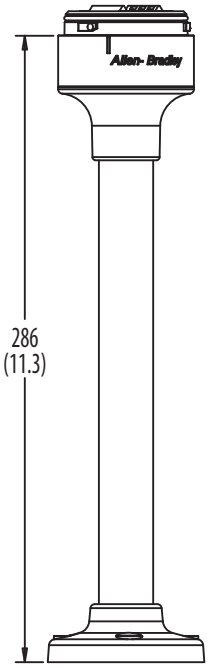

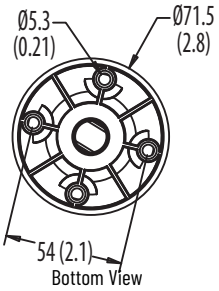

Double-sided Base

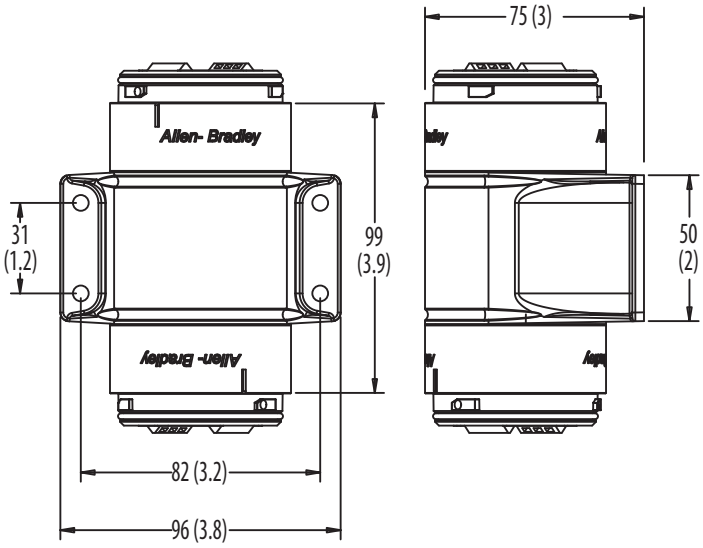

Flange-style Base with M12 Micro Connector (Male)

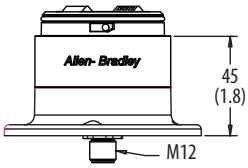

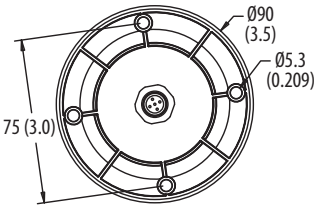

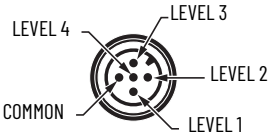

5-pin DC Micro Configuration

1/2 in. NPT Thread Base

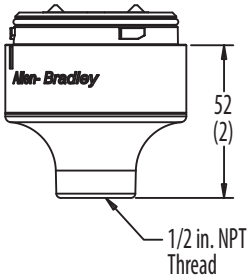

This product line includes 50 mm (855E) and 70 mm (855T) stack lights.

Bulletin 855E — 50 mm Control Tower Stack Lights

These devices are designed to communicate application status, alerting you to critical equipment and system needs on the plant floor. They can be preassembled to save time or ordered as separate light and sound modules for customized field assembly.

Light Modules

Flashing Incandescent

855E	-	10	FN	4
		a	b	c

a	
Voltage	
Code	Description
00	0...250V AC/DC (no lamp module) (1)
12	12V AC/DC
24	24V AC/DC
10	120V AC
20	240V AC

b	
Light Module Type	
Code	Description
XN	Steady no lamp (1)
DN	Steady incandescent
FN	Flashing incandescent
TL	Steady socket-mount LED
GL	Flashing socket-mount LED
BL	Strobe

c	
Lens Color	
Code	Description
3	Green
4	Red
5	Amber
6	Blue
7	Clear
8	Yellow

(1) Can only be selected with module type XN, voltage code 00. Accepts socket mount incandescent lamp types only.

Sound Modules

Sound modules have continuous and pulsing tones. Maximum sound output is 103 dB at 1 m (3.3 ft). A reduced volume setting is available by changing the position of the volume DIP switch, which produces a sound output of 88 dB(A) at 1 m (3.3 ft). Maximum sound output is 80 dB(A) at 1 m (3.3 ft).

Black Two-tone Sound Module

855E	-	B	10	TA3
		a	b	c

a	
Housing Color	
Code	Description
B	Black
G	Gray

b	
Voltage	
Code	Description
12	12V AC/DC
24	24V AC/DC
10	120V AC
20	240V AC

c	
Module Type	
Code	Description
SA3	Single circuit/single tone piezo style steady/pulsing DIP switch selectable
TA3	Two circuit/two-tone piezo style steady/pulsing DIP switch selectable

Standard Stack Light Bases

Surface-mount Base with Cap

Vertical-mount Base with Cap

Pole-mount Bases

Quick-release Base

855E	-	B	VM	C
		a	b	c

a	
Housing Color	
Code	**Description**
B	Black
G	Gray

b	
Base Type	
Code	**Description**
CB	Surface mount with 1/2 in. NPT threading
RB	Surface mount with M20 metric threading
SB	Surface mount with PG16 threading
TM	25 mm (0.98 in.) tube mount
VM	Vertical mount
PM10	10 cm (3.9 in.) aluminum pole-mount base
PM25	25 cm (9.8 in.) aluminum pole-mount base
PM40	40 cm (15.7 in.) aluminum pole-mount base
PM60	60 cm (23.6 in.) aluminum pole-mount base
PM80	80 cm (31.5 in.) aluminum pole-mount base
MM10	10 cm (3.9 in.) quick-release base
MM25	25 cm (9.8 in.) quick-release base
MM40	40 cm (15.7 in.) quick-release base

c	
Cap Option (1)	
Code	**Description**
Blank	No cap
C	Cap included

(1) Quick-release bases always include a cap.

Pre-configured Tower Lights, 1...5 Modules

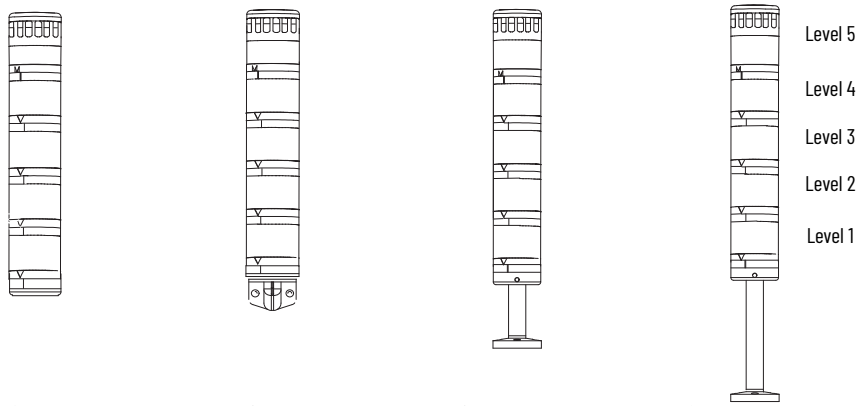

Surface Mount | Vertical Mount | 10 cm Pole Mount | 25 cm Pole Mount

855	EC	-	B	10	Y	3	L	5	B	3	F	7	Y	6
	a		b	c	d	e	d	e	d	e	d	e	d	e
					(Level 1, d+e)		(Level 2, d+e)		(Level 3, d+e)		(Level 4, d+e)		(Level 5, d+e)	

a	
Base Type	
Code	**Description**
EC	Surface mount - 1/2 in. NPT threading
ES	Surface mount - PG16
EV	Vertical mount
EM	25 mm tube mount
EP	10 cm (3.9 in.) pole mount
EE	25 cm (9.8 in.) pole mount

b	
Base & Cap Color	
Code	**Description**
B	Black
G	Gray

c	
Voltage	
Code	**Description**
12	12V AC/DC
24	24V AC/DC
10	120V AC
20	240V AC

d	
Module Type	
Code	**Description**
D	Steady incandescent
F	Flashing incandescent
Y	Steady LED
L	Flashing LED
B	Strobe
P	Single-circuit piezo sound module
Q	Two-circuit piezo sound module(1)

e	
Lens Color/Sound	
Code	**Description**
1	Sound module (2)
3	Green
4	Red
5	Amber
6	Blue
7	Clear
8	Yellow

(1) If the two-circuit sound module (option Q in Table d) is selected, the maximum number of light modules that are allowed is three.
(2) Sound module option can only be selected with Module Type option P or Q in Table d. They must be in the top position of the stack.

Accessories – Bulletin 855E/855T

	Description		Cat. No.
(BA15d Bayonet) 19 mm Socket Height	Incandescent Lamps	12V AC/DC	855T-L12
		24V AC/DC	855T-L24
		120V AC	855T-L10
		240V AC	855T-L20
	LED Lamps for Socket-mounted Modules (For Industrial Use Only)	**Color**	**Cat. No.**
	12V AC/DC	Red	855E-LL12R
		Green	855E-LL12G
		Amber	855E-LL12A
		Blue	855E-LL12B
		Yellow	855E-LL12Y
		White (1)	855E-LL12W
	24V AC/DC	Red	855E-LL24R
		Green	855E-LL24G
		Amber	855E-LL24A
		Blue	855E-LL24B
		Yellow	855E-LL24Y
		White (1)	855E-LL24W
	120V AC	Red	855E-LL10R
		Green	855E-LL10G
		Amber	855E-LL10A
		Blue	855E-LL10B
		Yellow	855E-LL10Y
		White (1)	855E-LL10W
	240V AC	Red	855E-LL20R
		Green	855E-LL20G
		Amber	855E-LL20A
		Blue	855E-LL20B
		Yellow	855E-LL20Y
		White (1)	855E-LL20W

(1) White LED lamps are to be used with a clear lens option.

	Description	Color	Cat. No.
	Caps (top of stack) The cap is installed to the top of the uppermost light module. No cap is needed if the top module is a sound module, or a light/with sound module.	Black	855E-ABCAP (1)
		Gray	855E-AGCAP (1)
		Black	855T-ABCAP (2)
		Gray	855T-AGCAP (2)
	Module Securing Screws (Bag of 5)		855E-ASC (1)

(1) For use with Bulletin 855E Control Tower™ stack lights only.
(2) For use with Bulletin 855T Control Tower stack lights only.

Table 98 - Gaskets

	Description	Cat. No.
	Lens O-ring Seal Replacement rubber O-rings are to be installed between all bases, light, sound, and light/with sound modules. (Package quantity = 5)	855E-ALSG (1)
		855T-ALSG (2)
	Surface Mount Gasket Replacement flat gasket is to be placed between the mounting surface and the surface mount base. (Package quantity = 5)	855E-ASFG (3)
		855T-ASFG (4)
	Pole Foot Gasket Replacement flat gasket is to be placed between the mounting surface and the pole base bottom foot. (Must order multiples of 5.) For use with Cat. No. 855T-BPM10C and 855T-BPM25C pole bases, Cat. No. 854J-BSFC and 854J-BSFQD5C bases, and Bul. 855T, 855E, 855F, 855D, 854J, and 854K quick release bases.	855T-APFG
	Vertical Mount Gasket Replacement flat gasket is to be placed between the mounting surface and the vertical mount base (Cat. No. 854J-BVMC). (Package quantity = 5)	855T-AVFG
	Tube Mount Gasket Replacement O-ring gasket is to be placed in the tube mount pole opening before the tube is installed (BTM- and GTM- type bases). (Package quantity = 5)	855T-AVTG
	Mounting Screw Washer Kit Replacement flat washers are used to provide a seal where the mounting screw meets the pole base. (1 kit includes 20 pieces) (Package quantity = 20)	855T-AMSG

(1) For use with Bulletin 855E Control Tower stack lights only.
(2) For use with Bulletin 855T Control Tower stack lights only.
(3) For use with Bulletin 855E Control Tower stack lights (SB, RB, & CB bases) only.
(4) For use with Bulletin 855T Control Tower stack lights (BSB and BCB bases) only.

Table 99 - Pole Connection Boxes(1), Hole Plugs, and Cable Glands

	Description	Cat. No.
	Black surface mount with PG16 threaded side entrance	855T-BSMP
	Black surface mount with M20 threaded side entrance	855T-BSMR
	Black vertical mount with PG16 threaded side entrance	855T-BVMP
	Black vertical mount with M20 threaded side entrance	855T-BVMR
	Black magnetic mount with PG16 threaded side entrance	855T-BMMP
	Black magnetic mount with M20 threaded side entrance	855T-BMMR
	Black magnetic mount with 1/2 in. NPT threaded side entrance	855T-BMMN
	Black PG16 threaded hole plug	855T-ABUP
	Black M20 threaded hole plug	855T-ABUR
	Black PG16 threaded cable gland	855T-ABCP
	Black M20 threaded cable gland	855T-ABCR
	Black 1/2 in. NPT sealing connector	855T-ABHN
	Mounting Screws (M5 x 40 screws) for mounting Pole Mount Base to Pole Connection Box	855T-AJBS

(1) For use with Bulletin 855E and 855T pole mount bases, except for stainless steel and quick release base types.

Table 100 - Mounting Kits

	Description	Cat. No.
	Vertical Mount Kit Kit includes vertical bracket and set of three sealing washers. For use with 855E surface mount base.	855E-AVM
	Vertical Mount Kit Kit includes vertical bracket and set of three sealing washers. For use with 856T and 855E pole mount bases, 856T surface mount bases, and 856T M12 QD bases.	855T-AVM

Specifications

Table 101 - Mechanical

Standard Bases		Based on the weight and style of mounting; tower lights are subject to damage from shock and vibration. The following are reference guidelines for maximum acceptable conditions.	
		Shock [G]	Vibration [G]
Surface-mount base or 10 cm aluminum pole base	1 module stack	150	5
	3 module stack	45	1.5
	5 module stack	35	0.75
Vertical base or 25 cm aluminum pole base	1 module stack	95	3.5
	3 module stack	30	1.25
	5 module stack	20	0.5
Recommended wire size		0.5...1.5 mm^2 (22...16 AWG)	
Recommended terminal torque		0.87 N•m (7 lb•in)	

Table 102 - Environmental

Attribute		Value
Ingress Ratings	Light modules with cap	UL Type 4/4X/13, IP66
	Sound modules	UL Type 4/4X/13, IP66
	Surface, vertical, tube mount bases	UL Type 4/4X/13, IP66
	Pole-mount bases	UL Type 4/4X/13, IP66
	Flange-style base with M12 micro connector(1)	UL Type 4/4X/13, IP66
Temperature ranges	Operating	-25...+50 °C (-13...+122 °F)
	Storage	-40...+85 °C (-40...+185 °F)

(1) UL Type 1 when used with Cat. No. 855T-AVM mounting bracket.

Table 103 - Materials

Part	Material
Bases, caps, lens covers, sound module housings, lenses	Polycarbonate
Lamp socket	Polycarbonate
Rubber seals and gaskets	Nitrile rubber
Pole (for aluminum pole assembly)	Aluminum
Pole base footing (for aluminum pole base)	Polycarbonate
Insulation sleeve (for pole insulation)	Polyolefin
Mounting screw washers	Polypropylene

Table 104 - Light Output

Device		Light Output			
		12V AC/DC	24V AC/DC	120V AC	240V AC
Steady incandescent		0.5 MSCP 6.3 Lumens	2.5 MSCP 31.4 Lumens	3.0 MSCP 37.7 Lumens	0.49 MSCP 6.2 Lumens
Flashing incandescent					
Strobe		1 J per lamp			
Steady, flashing socket mount LED	Red	900...2240 mcd			
	Green	900...1800 mcd			
	Amber	1400...3550 mcd			
	Blue	224...560 mcd			
	White and yellow	900...1800 mcd			

Table 105 - Operating Voltage

Device	Operating Voltage			
	12V AC/DC	24V AC/DC	120V AC	240V AC
Light modules and sound modules	12V AC/DC (±10%)	24V AC/DC (±10%)	110V AC, 50 Hz (±10%) 120V AC, 60 Hz (±10%)	230V AC, 50 Hz (±10%) 240V AC, 60 Hz (±10%)

Table 106 - Lamp Life Ratings (Design Life) Average Life Under Static, No Vibration, Conditions

Device	Lamp Life Rating			
	12V AC/DC	24V AC/DC	120V AC	240V AC
Incandescent modules(1) (2)	8000 hr	7000 hr	3000 hr	1600 hr
LED modules	100,000 hr			
Strobe modules	15,000 hr			
Sound modules	20,000 hr			

(1) First failures at about 35% of average life. Severe vibration can reduce life to 44% of average life.
(2) Flashing applications can reduce life to 50% of average life.

Table 107 - Current Consumption

Device		Current Consumption [mA]		
		24V AC/DC	120V AC	240V AC
Light only modules	Steady LED	22 (red, amber, and yellow) 33 (green, blue, and white)	30 (red, amber, and yellow) 29 (green, blue, and white)	
	Flashing LED	28 (red, amber, and yellow) 36 (green, blue, and white)	30 (red, amber, and yellow) 29 (green, blue, and white)	
	Strobe LED	35 (red, amber, and yellow) 65 (green, blue, and white)	10	
Sound modules	Single-tone	65	31	32

Table 108 - Flashing and Tone Frequency

Attribute	Value
Flashing Frequency (Light Only Modules)	
Flashing incandescent modules	12V module approximately 1.5 Hz 24V, 120V, and 240V modules approximately 2 Hz Time ON/Time OFF = 1:1
Flashing LED modules	Approximately 1.5 Hz; Time On/Time OFF = 1:1
LED strobe modules	Approximately 2 Hz (flash duration 1/50,000 second)
Flashing and Tone Frequency (Light Modules/with Sound Set at Continuous Tone)	
Tone frequency	Tone frequency is preset at 2800 Hz
Flashing and Tone Pulsing Frequencies (Light Modules/with Sound Set at Pulsing Tone)	
Tone frequency	Tone frequency is preset at 2800 Hz

Table 109 - Decibel Rating (Sound Modules) (1)

Device	Decibel Rating
Single-tone sound module (SA3)	Maximum volume ranges from 88 dB(A) or 103 dB(A) (volume adjustable by DIP switch)
Two-tone sound module (TA3)	

(1) All dB(A) ratings are determined at a distance of 1 m (3.3 ft) from the sound module.

Table 110 - Leakage Current Impact

All light and sound modules can absorb up to 3 mA of leakage current from solid-state outputs without module activation.

Table 111 - Standards and Certifications

Attribute	Bulletin 855E — 50 mm Control Tower Stack Lights
Standards Compliance	• UL 508 • CSA C22.2 No. 14 • EN/IEC 60947-1 • EN/IEC 60947-5-1
Certifications	• c-UL-us Listed (File No. E14840, Guides NKCR, NKCR7) • CE Marked

Approximate Dimensions

Dimensions in millimeters (inches). Dimensions are not intended to be used for manufacturing purposes.

Light Modules

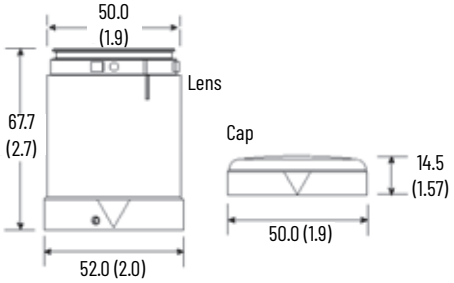

Vertical-mount Base

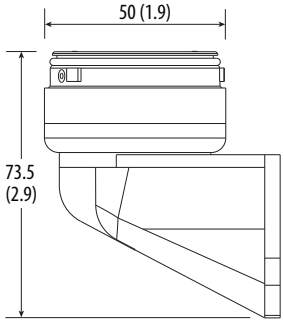

Sound Module

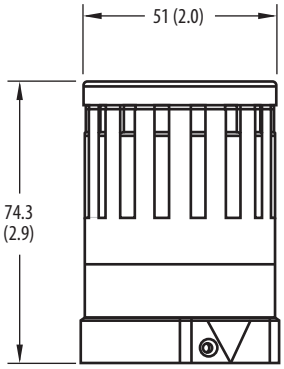

Surface-mount Base

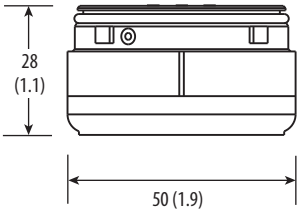

Quick Release Base

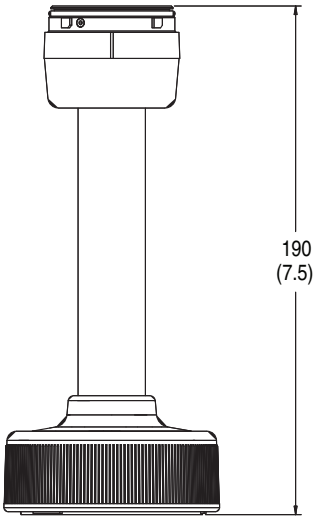

Pole-mount Bases

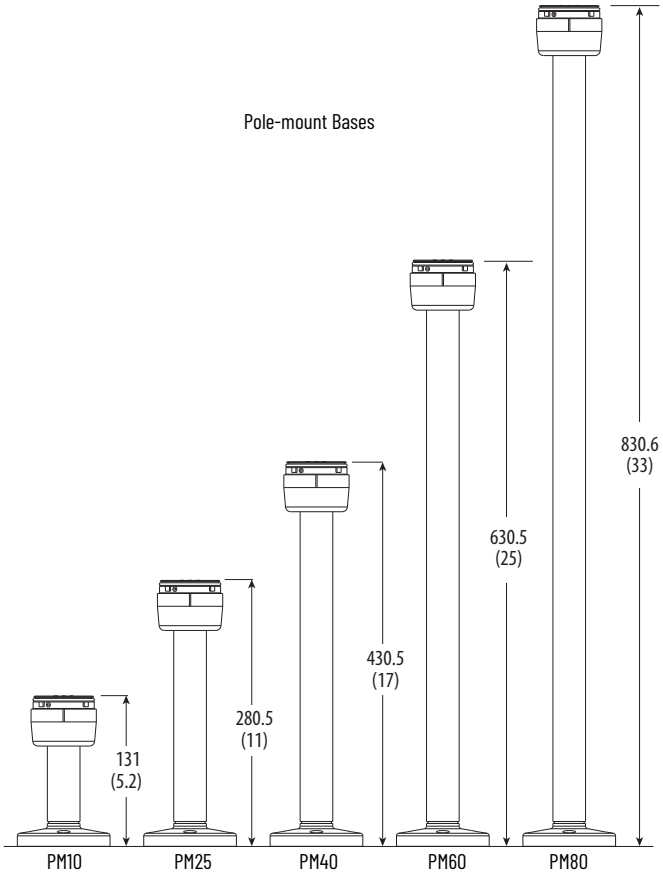

Bulletin 855T — 70 mm Control Tower Stack Lights

These devices are designed to communicate application status, alerting you to critical equipment and system needs on the plant floor. They can be preassembled to save time or ordered as separate light and sound modules for customized field assembly.

Light Modules

Red Flashing Incandescent (Black Housing)

855T	-	B	10	FN	4
		a	b	c	d

a	
Housing Color	
Code	**Description**
B	Black
G	Gray

b	
Voltage	
Code	**Description**
00	0...250V AC/DC (use only with module code XN)
12	12V AC/DC
24	24V AC/DC
10	120V AC
20	240V AC

c	
Light Module Type	
Code	**Description**
XN	Steady no lamp(1)
DN	Steady incandescent
FN	Flashing incandescent
TL	Steady LED
GL	Flashing LED
RL	Rotating LED, simulated with fixed LEDs(2)
BR	Strobe

d	
Lens Color	
Code	**Description**
3	Green
4	Red
5	Amber
6	Blue
7	Clear
8	Yellow

(1) Use only with Voltage Code 00. Accepts LED module or incandescent lamp.
(2) Only available with Voltage Codes 10 or 24, and Color Codes 3, 4, or 5.

Combined Light Modules with Piezo Sounder

All single-circuit modules contain a selected light option with a sound device that operates simultaneously. All two-circuit modules contain two circuits that allow for separate operation of light or sound. The piezo-style sound modules can be switched to pulsing or continuous sound with a DIP switch. Additionally, the volume can be adjusted to either low (92 dB(A)) or high (107 dB(A)), via a DIP switch. UL Type 4/4X/13, IP65.

Combination Module

855T	-	B	10	DC	3
		a	b	c	d

a	
Housing Color	
Code	**Description**
B	Black
G	Gray

b	
Voltage	
Code	**Description**
12	12V AC/DC
24	24V AC/DC
10	120V AC
20	240V AC

c	
Combined Module Type (1) (2)	
Code	**Description**
DC	Steady incandescent with sound
DD	Two-circuit steady incandescent with sound
FC	Flashing incandescent with sound
TC	Steady LED with sound
GC	Flashing LED with sound
BC	Strobe with sound

d	
Lens Color	
Code	**Description**
3	Green
4	Red
5	Amber
6	Blue
7	Clear
8	Yellow

(1) The single-circuit combined light/with sound module uses one circuit in a stack. It can be used with a maximum of four light modules and must be placed in the top position of a stack.
(2) The two-circuit combined light/with sound module uses two circuits in a stack. It can be used with a maximum of three light modules and must be placed in the top position of a stack.

Transducer-style Sound Modules

- UL Type 12, IP54
- Up to 15 tones
- Adjustable volume from 85...103 dB at 1 m (3.3 ft)
- Adjustable frequency and speed tone

Sound Module

855T	-	B	10	SA1
		a	b	c

a	
Housing Color	
Code	**Description**
B	Black
G	Gray

b	
Voltage	
Code	**Description**
12	12V AC/DC
24	24V AC/DC
10	120V AC
20	240V AC

c	
Module Type	
Code	**Description**
SA1	Single-tone sound module with 13 different tones (1)
TA1	Dual-tone sound module with 15 sets of dual-tone combinations (2)

(1) This module uses one circuit in a stack. It can be used with maximum of any four light modules and must be placed on top of stack.
(2) This module uses two circuits in a stack. It can be used with a maximum of any three light modules and must be placed on top of stack.

Piezo-style Sound Modules

- Single- or dual-circuit versions
- High/low volume selectable via DIP switch

855T	-	G	24	TA2
		a	b	c

a	
Housing Color	
Code	**Description**
B	Black
G	Gray

b	
Voltage	
Code	**Description**
12	12V AC/DC
24	24V AC/DC
10	120V AC
20	240V AC

c	
Module Type	
Code	**Description**
SA2	• Single-tone/single-circuit piezo-style module with continuous or pulsing tones (modified by a DIP switch) • Type 12 • Volume 97 dB or 85 dB @ 1 m (3.3 ft)
TA2	• Dual-tone/dual-circuit piezo-style module with continuous or pulsing tone (modified by energizing one or two circuits of sound modules) • Type 12 • Volume 97 dB or 85 dB @ 1 m (3.3 ft)
SA3	• Single-circuit piezo-style module with continuous or pulsing tones (modified by a DIP switch) • Type 4/4X/13 • Volume 107 dB or 92 dB @ 1 m (3.3 ft)
TA3	• Dual-circuit piezo-style module with continuous or pulsing tone (modified by energizing one or two circuits of sound modules) • Type 4/4X/13 • Volume 107 dB or 92 dB @ 1 m (3.3 ft)

Standard and DeviceNet Stack Light Bases

Surface-mount Base with Cap

Vertical-mount Base with Cap

10 cm Pole-mount Base

25 cm Quick-release Base

40 cm Powder-coated Stainless Steel Pole-mount Base

80 cm Powder-coated Stainless Steel Pole-mount Base with Cap

Surface-mount, Conduit-mount Base with Stranded Wire Cable

10 cm Pole-mount Base with Micro-connect Cable and Cap

Vertical-mount Base with Micro-connect Cable and Cap

855T	-	DL1	B	PM10	C
		a	b	c	c

a	
Network Connection Type	
Code	**Description**
Blank	No network connection
DM1	DeviceNet® micro-connect with 1 m (3.3 ft) cable (1)
DS2	DeviceNet stranded wire connect with 2 m (6.6 ft) cable (1)
DL1	DeviceNet mini-connect with 1 m (3.3 ft) cable (1)

b	
Housing Color	
Code	**Description**
B	Black
G	Gray

c	
Base Type	
Code	**Description**
CB	Surface mount—1/2 in. NPT conduit mount
SB	Surface mount — PG16 conduit mount
RB	Surface mount — M20 x 1.5 conduit mount
VM	Vertical mount
TM	25 mm diameter tube mount
PM10	10 cm (3.9 in.) aluminum pole mount base
PM25	25 cm (9.8 in.) aluminum pole mount base
PM40	40 cm (15.7 in.) aluminum pole mount base
SPM10	10 cm (3.9 in.) stainless steel pole mount (2)
SPM25	25 cm (9.8 in.) stainless steel pole mount (2)
SPM40	40 cm (15.7 in.) stainless steel pole mount (2)
SPM60	60 cm (23.6 in.) stainless steel pole mount (2)
SPM80	80 cm (31.5 in.) stainless steel pole mount (2)
MM10	10 cm (3.9 in.) quick release base
MM25	25 cm (9.8 in.) quick release base
MM40	40 cm (15.7 in.) quick release base

d	
Cap Option	
Code	**Description**
Blank	No cap
C	Cap included

(1) DeviceNet bases DL1, DM1, or DS2 can only be used with 24V AC/DC and they are only available with Base Types CB, SB, VM, TM, PM10, or PM25.
(2) Stainless steel tube is powder-coated in black.

Pre-configured Control Tower Lights, 1...5 Modules

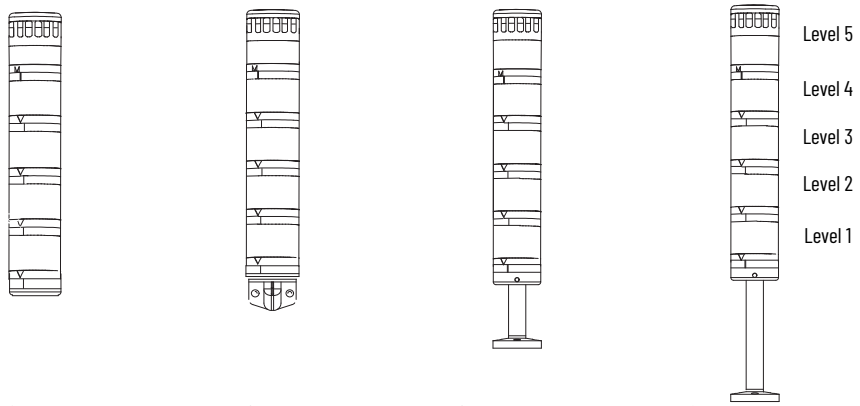

Surface Mount | Vertical Mount | 10 cm Pole Mount | 25 cm Pole Mount

855	TS	-	DL1	B	24	Y	4	L	5	B	3	F	7	Y	6
	a		b	c	d	e	f	e	f	e	f	e	f	e	f
						(Level 1, e+f)		(Level 2, e+f)		(Level 3, e+f)		(Level 4, e+f)		(Level 5, e+f)	

a	
Base Type	
Code	**Description**
TC	Surface mount 1/2 in. NPT conduit
TS	Surface mount PG16 conduit
TV	Vertical mount
TP	10 cm (3.9 in.) pole mount
TE	25 cm (9.8 in.) pole mount
TM	25 mm diameter tube mount

b	
Network Options (1)	
Code	**Description**
Blank	Standard
DL1	DeviceNet mini-connect with 1 m (3.3 ft) cable
DM1	DeviceNet micro-connect with 1 m (3.3 ft) cable
DS2	DeviceNet stranded wire connect with 2 m (6.6 ft) cable

c	
Housing Color	
Code	**Description**
B	Black
G	Gray

(1) DeviceNet bases DL1, DM1, or DS2 can only be used with 24V AC/DC.

d	
Voltage	
Code	**Description**
12	12V AC/DC
24	24V AC/DC
10	120V AC
20	240V AC

e	
Module Type	
Code	**Description**
D	Steady incandescent
F	Flashing incandescent
Y	Steady LED
L	Flashing LED
B	Strobe
T	Steady incandescent with sound (1)
H	Flashing incandescent with sound (1)
J	Dual-circuit steady incandescent with sound
E	Steady LED with sound (1)
G	Flashing LED with sound (1)
Z	Strobe with sound (1)
A	Transducer single-circuit sounder UL Type 12, IP54(1)
W	Transducer dual-circuit sounder UL Type 12, IP54 (1)
P	Single-circuit piezo alarm
Q	Dual-circuit piezo alarm

f	
Lens Color/Sound	
Code	**Description**
1	Sound module (2)
3	Green
4	Red
5	Amber
6	Blue
7	Clear
8	Yellow

(1) Only one sound module or light module/with sound can be assembled per stack. These modules must be placed in the top position.
(2) Sound module from Table f can only be selected with single-tone or two-tone module types from Table e.

Accessories

See Accessories – Bulletin 855E/855T on page 70.

Specifications

Table 112 - Mechanical

Attribute			Based on the weight and style of mounting; tower lights are subject to damage from shock and vibration. The following are reference guidelines for maximum acceptable conditions.	
			Shock [G]	Vibration [G]
Standard bases	Surface-mount base or 10 cm (3.9 in.) aluminum pole base	1 module stack	150	5
		3 module stack	45	1.5
		5 module stack	35	0.75
	Vertical base or 25 cm (9.8 in.) aluminum pole base	1 module stack	95	3.5
		3 module stack	30	1.25
		5 module stack	20	0.5
DeviceNet bases	Surface-mount base or 10 cm (3.9 in.) aluminum pole base	1 module stack	50	5
		3 module stack	45	1.5
		5 module stack	35	0.75
	Vertical base or 25 cm (9.8 in.) aluminum pole base	1 module stack	50	3.5
		3 module stack	30	1.25
		5 module stack	20	0.5
Recommended wire size			0.5...2.5 mm^2 (22...14 AWG)	
Recommended terminal torque			0.8 N•m (7 lb•in)	

Table 113 - Environmental

Attribute		Value
Ingress ratings	Light modules with cap and combined light/sound modules	UL Type 4/4X/13, IP65
	Sound modules (SA1, SA2, TA1, TA2)	UL Type 12, IP54
	Sound modules (SA3, TA3)	UL Type 4/4X/13, IP65
	Surface, vertical, tube mount, and On-Machine™ bases	UL Type 4/4X/13, IP65
	Pole-mount bases (aluminum)	UL Type 4/13, IP65
	Pole-mount bases (stainless steel)	UL Type 4/4X/13, IP65
Temperature ranges	Operating	-25...+70 °C (-13...+158 °F)
	Storage	-40...+85 °C (-40...+185 °F)

Table 114 - Materials

Part	Material
Bases, caps, lens covers, sound module housings, lenses, lamp sockets	Polycarbonate
Rubber seals and gaskets	Nitrile rubber
Pole (for aluminum pole assembly)	Aluminum
Pole base footing (for aluminum pole base)	Polycarbonate
Pole (for stainless steel assembly)	Powder-coated stainless steel
Pole base footing (for stainless steel pole base)	Zinc
Insulation sleeve (for pole insulation)	Polyolefin
Surface and vertical-mount pole connection box and magnetic mount housing	Polycarbonate
Mounting screw washers	Polypropylene
DeviceNet base grommet	Neoprene®
DeviceNet cable jackets	CPR Chlorinated Polyethylene
DeviceNet cable connectors	Santoprene®

Table 115 - Light Output

Device		Light Output			
		12V AC/DC	24V AC/DC	120V ACC	240V AC
Steady incandescent		0.5 MSCP 6.3 Lumens	2.5 MSCP 31.4 Lumens	3.0 MSCP 37.7 Lumens	0.49 MSCP 6.2 Lumens
Flashing incandescent					
Strobe		3 J per lamp			
Steady/flashing socket mount LED	Red	900...2240 mcd			
	Green	900...1800 mcd			
	Amber	1400...3550 mcd			
	Blue	224...560 mcd			
	White and yellow	900...1800 mcd			

Table 116 - Operating Voltage

Device	Operating Voltage			
	12V AC/DC	24V AC/DC	120V AC	240V AC
Light modules and sound modules	12V AC/DC (±10%)	24V AC/DC (±10%)	110V AC, 50 Hz (±10%) 120V AC, 60 Hz (±10%)	230V AC, 50 Hz (±10%) 240V AC, 60 Hz (±10%)

Table 117 - Lamp Life Ratings (Design Life) Average Life Under Static, No Vibration, Conditions

Device	Lamp Life Rating			
	12V AC/DC	24V AC/DC	120V AC	240V AC
Incandescent modules(1) (2)	8000 hr	7000 hr	3000 hr	1600 hr
LED modules	100,000 hr			
Strobe modules	15,000 hr			
Sound modules	20,000 hr			

(1) First failures at about 35% of average life. Severe vibration can reduce life to 44% of average life.
(2) Flashing applications can reduce life to 50% of average life.

Table 118 - Current Consumption

Device		Current Consumption [mA]			
		12V AC/DC	24V AC/DC	120V AC	240V AC
Light only modules	Steady incandescent	208	271	58	23
	Steady or flashing LED	42	29	21	20
	Strobe	240	170	50	35
Light modules with sound	Steady incandescent/with sound	218	281	78	43
	Flashing incandescent/with sound	218	281	78	43
	Steady or flashing LED/with sound (red, amber, yellow)	100	62	22.5	20
	Steady or flashing LED/with sound (green, blue, white)	250	180	70	55
	Strobe/with sound	250	180	70	55
Transducer style sound modules	Single- and two-circuit modules	30	65	110V/50 Hz 120V/60 Hz 60 mA	230V/50 Hz 240V/60 Hz 60 mA
Piezo style sound modules	Single- and two-circuit modules	27	45	43	40
DeviceNet bases		–	70	–	–

Table 119 - Flashing and Tone Frequency

Attribute	Value
Flashing Frequency (Light Only Modules)	
Flashing incandescent modules	12V module approximately 1.5 Hz 24V, 120V, and 240V modules approximately 2 Hz Time ON/Time OFF = 1:1
Flashing LED modules	Approximately 1.5 Hz; Time On/Time OFF = 1:1
Strobe modules	Approximately 2 Hz (flash duration 1/50,000 second)
Flashing and Tone Frequency (Light Modules/with Sound Set at Continuous Tone)	
Tone frequency	Preset at 2400 Hz or 3300 Hz
Flashing incandescent/ with sound	12V module approximately 1.5 Hz 24V, 120V, and 240V modules approximately 1.6 Hz
Flashing LED/ with sound	Flashing frequency approximately 1.5 Hz
Strobe/with sound	Flashing frequency approximately 1.4 Hz
Flashing and Tone Pulsing Frequencies (Light Modules/with Sound Set at Pulsing Tone)	
Tone frequency	Preset at 2400 Hz or 3300 Hz
Steady incandescent/ with sound	Sound Pulsing Frequency — 1.5 Hz
Flashing incandescent/ with sound	Flashing and Pulsing Frequency the same for 12V module approximately 1.5 Hz, for 24V, 120V, and 240V modules approximately 1.6 Hz
Steady LED/ with sound	Sound Pulsing Frequency — 1.5 Hz
Flashing LED/ with sound	Flashing and Pulsing Frequency the same at 1.5 Hz
Strobe/with sound	Flashing and Pulsing Frequency the same at 1.4 Hz

Table 120 - Decibel Rating (Sound Modules)

Device	Decibel Rating (1)
Selectable tone sound module (SA1, TA1)	Maximum volume ranges from 64...103 dB(A) (volume adjustable) Based on tone that is selected for all settings except signal horn, which has a maximum of 80 dB(A)
Piezo sound module (SA2, TA2)	High 97 dB/Low 85 dB, selectable via DIP switch
Piezo sound module (SA3, TA3)	High 107 dB/Low 95 dB, selectable via DIP switch
Piezo light modules and light modules/with sound (set at continuous or pulsing tone)	High 107 dB/Low 95 dB, selectable via DIP switch

(1) All dB(A) ratings are determined at a distance of 1 m (3.3 ft) from sound module.

Table 121 - Leakage Current Impact

All light modules, sound modules, and light/sound modules can absorb up to 3 mA of leakage current from solid-state outputs without module activation. Some light and light modules with sound may not turn off completely when connected to solid-state outputs that emit leakage current. The following modules can be affected by an output module emitting a maximum of 3 mA. A dry contact can be used to reduce the effect of leakage current.	
12V AC/DC, 24V AC/DC, 120V AC, 240V AC	All light/sound combination modules

Table 122 - DeviceNet Bases

Attribute	Value
Communication rate options	125K, 250K, 500K, Autobaud

Table 123 - Standards and Certifications

Attribute	Bulletin 855T — 70 mm Control Tower Stack Lights
Standards compliance	• UL 508 • CSA C22.2 No. 14 • EN/IEC 60947-1 • EN/IEC 60947-5-1
Certifications	• c-UL-us Listed (File No. E14840, Guides NKCR, NKCR7) • CE Marked

Transducer Style Single-circuit Sound Module (SA1)

	DIP Switch Position	Tone Description		Speed [Hz]	Upper Frequency [Hz]	Lower Frequency [Hz]	Volume [dB(A)]
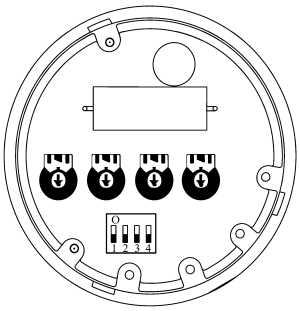 Adjustable Sound Settings		Triangle Tone		7...22	1500	500	80...100
		Continuous Tone		–	(1)	500	83...100
	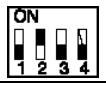	Interrupted Tone		0.5...1.5	(1)	500...1500	83...103
	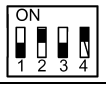	Changing Tone		0.5...1.5	500...1500	500...1500	83...103
	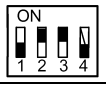	Saw Tooth Tone Ascending		0.5...1.5	500...1500	500...1500	83...103
		Saw Tooth Tone Descending		0.5...1.5	500...1500	500...1500	83...103
Volume Lower Freq. Upper Freq. Speed Rotated View of Sound Settings	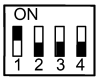	Sine-wave Tone		0.5...1.5	500...1500	500...1500	82...102
	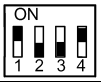	DIN-Emergency Signal	DIN 33404	1	1200	500	82...102
	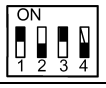	Siren (Non-repeating)		2...4 s	1500	500	83...103
	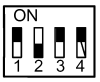	Signal Horn Continuous Tone		–	(1)	100...350	64...80
	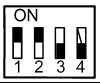	Three-tone Gong		2...4 s	660 550 440		76...95
	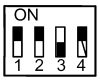	Two-tone Gong		2...4 s	550 440		75...93
	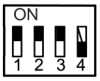	Gong		1...3 s	(1)	500...1500	75...93

(1) Set to maximum (+).

Transducer Style Dual-circuit Sound Module (TA1)

	DIP Switch Position	Tone A		Tone B	
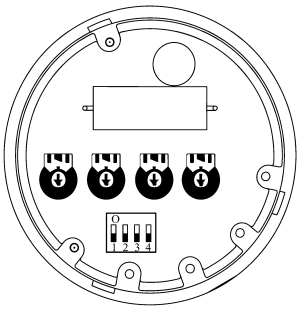 Adjustable Sound Settings	ON 1 2 3 4	Triangle Tone		Continuous Tone	
	ON 1 2 3 4	Continuous Tone		Changing Tone	
	ON 1 2 3 4	Continuous Tone		Interrupted Tone	
	ON 1 2 3 4	Interrupted Tone		Three-tone Gong	
	ON 1 2 3 4	Interrupted Tone		Siren (Non-repeating)	
	ON 1 2 3 4	Changing Tone		DIN-Emergency Signal	DIN 33404
	ON 1 2 3 4	Saw Tooth Tone Ascending		Continuous Tone	
Volume, Lower Freq., Upper Freq., Speed Rotated View of Sound Settings	ON 1 2 3 4	Saw Tooth Tone Descending		Interrupted Tone	
	ON 1 2 3 4	Sine-wave Tone		DIN-Emergency Signal	DIN 33404
	ON 1 2 3 4	DIN-Emergency Signal	DIN 33404	Three-tone Gong	
	ON 1 2 3 4	Siren (Non-repeating)		Triangle Tone	
	ON 1 2 3 4	Signal Horn Continuous Tone		Continuous Tone	
	ON 1 2 3 4	Three-tone Gong		Sine-wave Tone	
	ON 1 2 3 4	Two-tone Gong		Two-tone Gong (Non-repeating)	
	ON 1 2 3 4	Gong		Continuous Tone	

Approximate Dimensions

Dimensions in millimeters (inches). Dimensions are not intended to be used for manufacturing purposes.

Figure 9 - Assembled Control Tower Lights — Light Modules Only or Light Modules with Sound Module on Top Position [(a)]

Surface-mount Base (SB and CB)

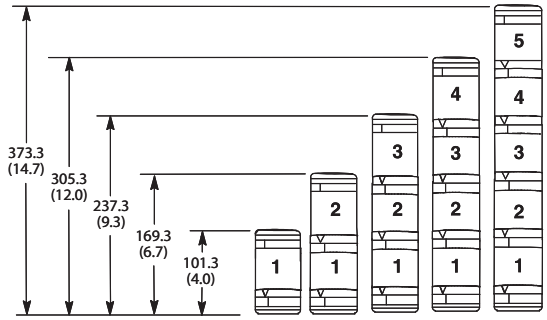

Tube-mount Base (TM)

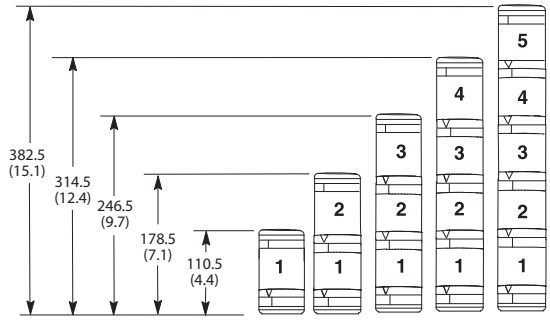

Vertical-mount Base (VM)

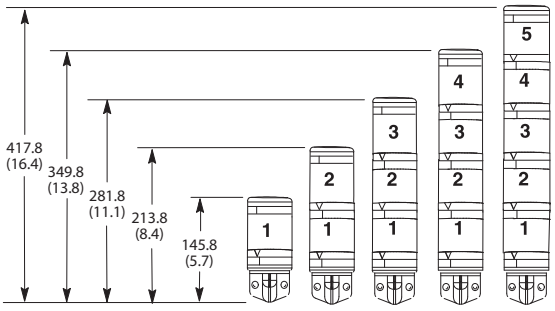

10 cm Pole-mount Base (PM10, SPM25)

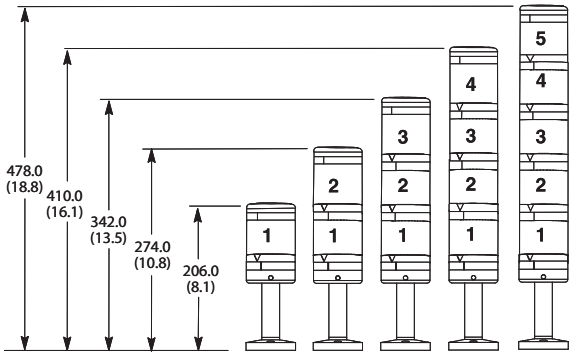

25 cm Pole-mount Base (PM25, SPM25)

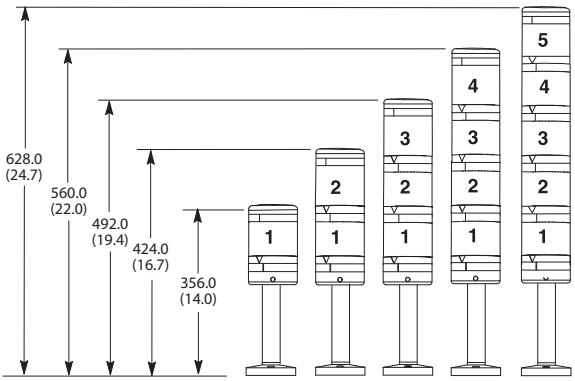

40 cm Pole-mount Base (PM40, SPM40)

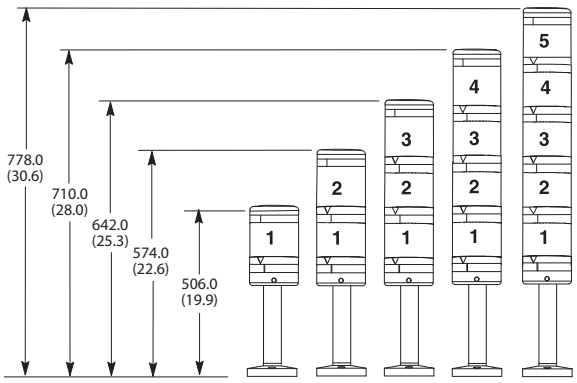

60 cm Pole-mount Base (SPM60)

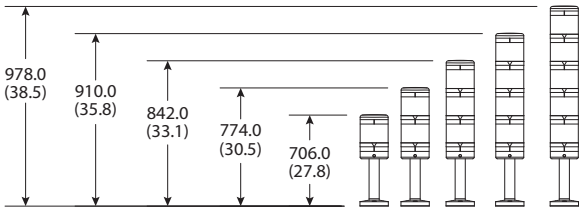

80 cm Pole-mount Base (SPM80)

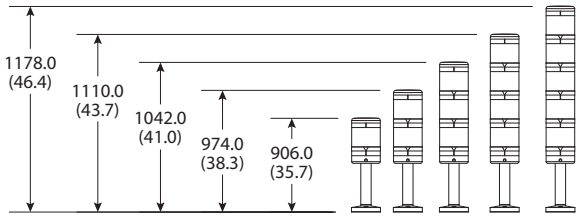

(a) If a combined light/sound module is used, add 21.5 mm (0.8 in.) to vertical dimensions.

Dimensions in millimeters (inches). Dimensions are not intended to be used for manufacturing purposes.

Figure 10 - Component and Accessory Dimensions

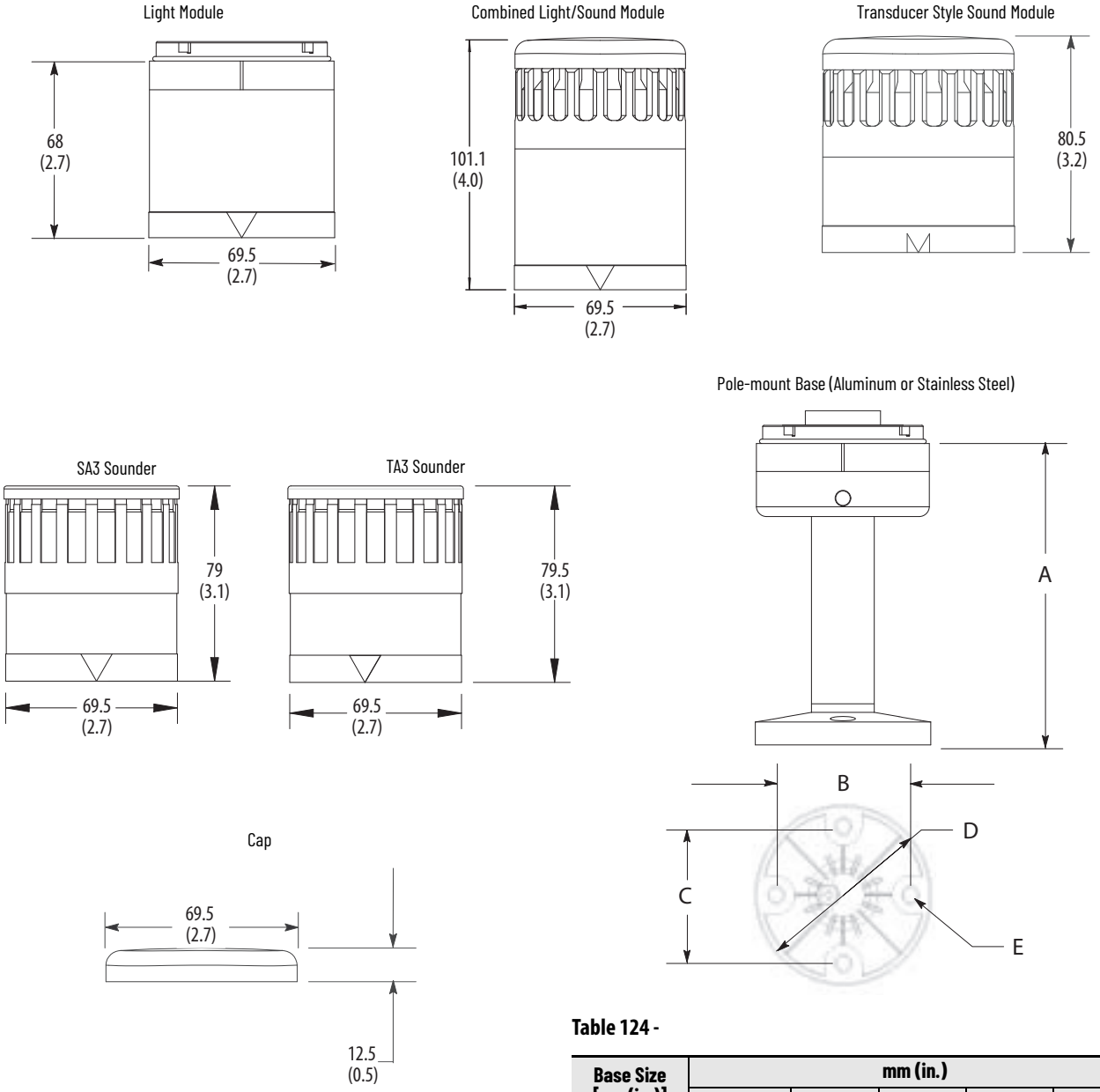

Table 124 -

Base Size [cm (in.)]	mm (in.)				
	A	B	C	D	E
10 (3.9)	124.5 (4.9)	54.0 (2.1)	54.0 (2.1)	70.0 (2.8)	5.0 (0.2)
25 (9.8)	274.5 (10.8)				
40 (15.7)	424.5 (16.7)				
60 (23.6)	624.5 (24.6)				
80 (31.5)	824.5 (32.5)				

Dimensions in millimeters (inches). Dimensions are not intended to be used for manufacturing purposes.

Figure 11 - Component and Accessory Dimensions

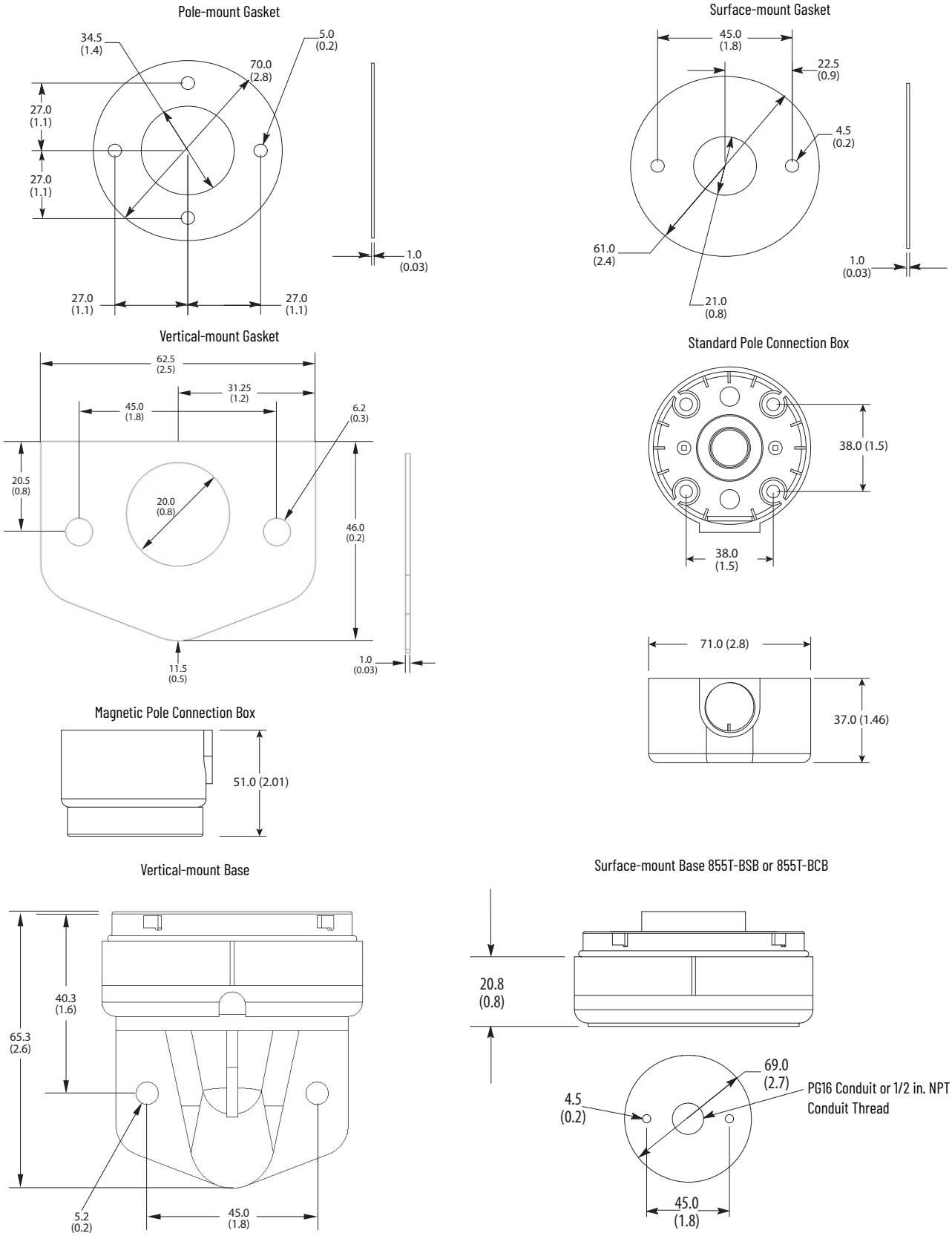

Dimensions in millimeters (inches). Dimensions are not intended to be used for manufacturing purposes.

Figure 12 - Component and Accessory Dimensions

Catalog Number 855E-AVM Vertical-mount Bracket

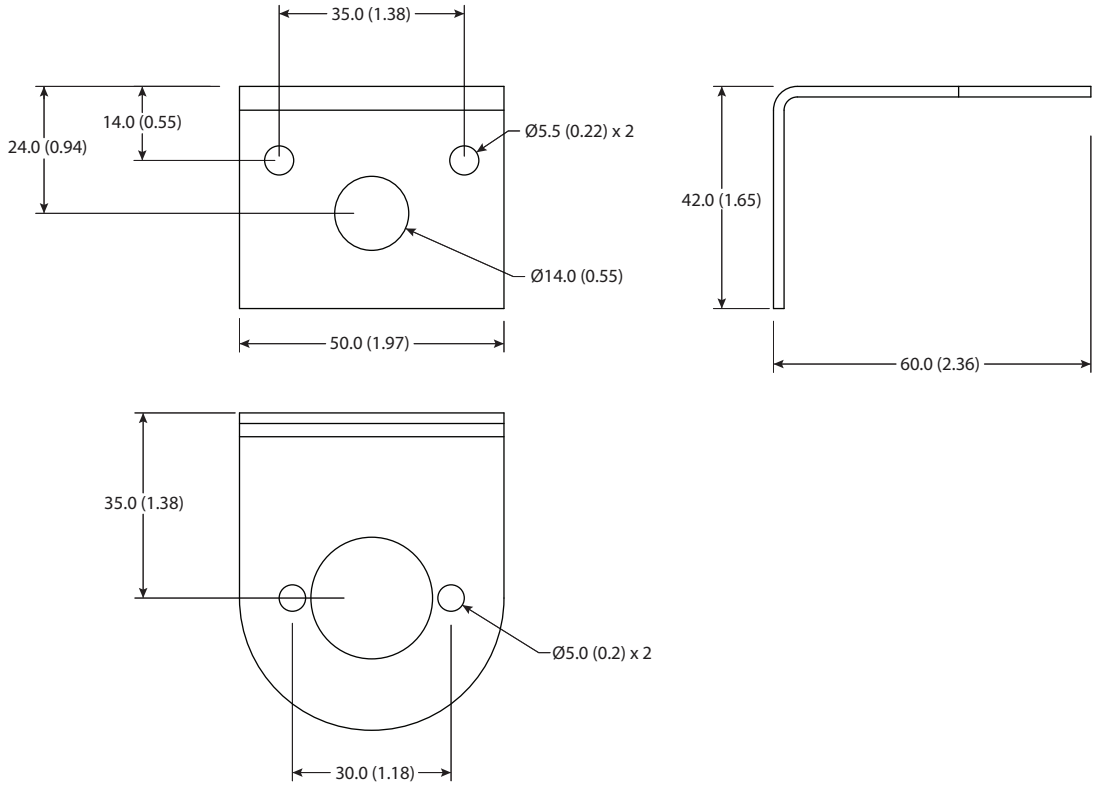

Catalog Number 855T-AVM Vertical-mount Bracket

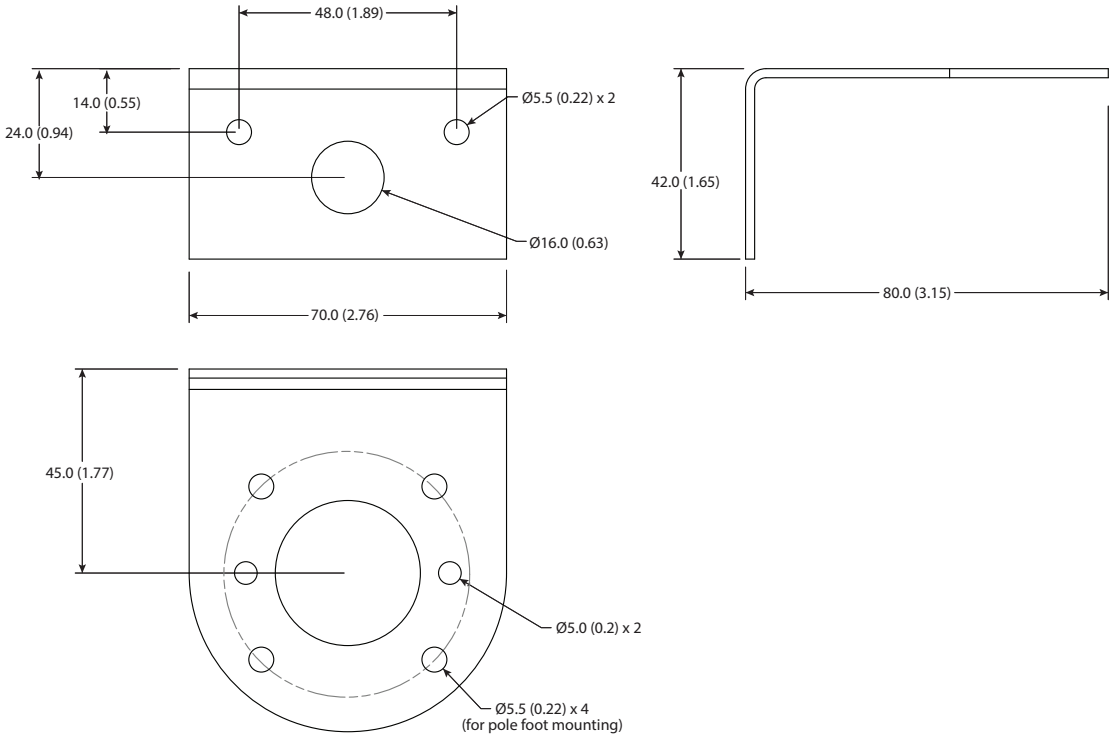

These devices give you the flexibility to meet the widest range of applications with a reduced number of components. This system uses a modular design that incorporates brighter LED illumination and a broad offering of sound technologies. All signals in the system are 24V AC/DC powered, which means that just three power modules can cover the entire system. They can be purchased as separate components or as a preconfigured, factory-assembled stack light for optimal flexibility.

Light Modules

Steady LED Module

Multi-function LED Module

Steady/Flashing Beacon Style

856T - B T 4
a b c

a	
Housing Color	
Code	**Description**
B	Black

b	
Module Type	
Code	**Description**
T	Steady LED
B	Multi-function LED steady/flashing/strobe 1/strobe 2
R	Rotating LED
MC	7-color LED (RGB) (1) (2)
GB	Steady/flashing, non-stackable beacon style
SB	Strobe 1/strobe 2, non-stackable beacon style (3)
RB	Rotating LED, non-stackable beacon style (4)
MB	7-color LED (RGB), non-stackable beacon style (1) (2)

c	
Output Color	
Code	**Description**
3	Green
4	Red
5	Amber
6	Blue
7	Clear
8	Yellow
9	Magenta (5)
Blank	For use with Module Type MC and MB only

(1) Output Color must be Blank (Table c).
(2) Can use three circuits to display up to seven colors, two circuits to display three colors, or one circuit to display one color.
(3) Can only be used with Output Color 4, 5, or 6 (Table c).
(4) Can only be used with Output Color 4 or 5 (Table c).
(5) Cannot be used with Module Type R and GB (Table b).

Sound Modules

Transducer Sounder

Recordable Sounder

In-line Piezo Sounder

Top-mount Piezo Sounder

856T - B P1
a b

a	
Housing Color	
Code	**Description**
B	Black

b	
Module Type	
Code	**Description**
P1	Single-circuit piezo, eight tones, top mount
TR3	Transducer, 16 tone tables/seven tones per table, three circuits (1)
PL1	In-line piezo, single circuit, eight tones
H3	Recordable sounder, up to 7 messages, three circuits (2)

(1) Can use three circuits to play up to seven tones, two circuits to play three tones, or one circuit to play one tone.
(2) Can use three circuits to play up to seven messages, two circuits to play three messages, or one circuit to play one message

Power Modules

24V AC/DC (seven circuits)

120/240V AC (three circuits)

120/240V AC (seven circuits)

856T - B 24 C
a b c

a	
Housing Color	
Code	**Description**
B	Black

b	
Voltage	
Code	**Description**
24	24V AC/DC, seven circuits
AC3	90...250V AC, three circuits
AC7	90...250V AC, seven circuits

d	
Cap Option	
Code	**Description**
C	Cap included

IO-Link Module

IO-Link Module

856T	-	B	24	LC
		a	b	c

a	
Housing Color	
Code	Description
B	Black

b	
Voltage	
Code	Description
24	24V DC

d	
Cap Option	
Code	Description
LC	Cap not included

Base Mounting Adapters

Surface 1/2 in. NPT

Surface with screws

Vertical mount

Pole mount

Threaded tube mount

856T	-	BMA	P10
		a	b

a	
Housing Color	
Code	Description
BMA	Black

b	
Mounting Style	
Code	Description
SN	NPT surface mount, Type 4/4X/13
VM	Vertical mount
SH	Surface mount NPT, Type 4/4X/13, preinstalled mounting hardware
P10	10 cm (3.9 in.) aluminum pole mount
P25	25 cm (9.8 in.) aluminum pole mount
P40	40 cm (15.7 in.) aluminum pole mount
P60	60 cm (23.6 in.) aluminum pole mount
T10	10 cm (3.9 in.) threaded tube (M20)
T25	25 cm (9.8 in.) threaded tube (M20)

Preassembled Bases

Surface with M12
Micro connector (5-pin)

Surface with M12 Micro
connector (8-pin)

Catalog Number 856T-B24SNC
Surface Mount for 24V AC/DC (seven circuits)

Catalog Number 856T-BA7VMC
Vertical Mount for 120/240V AC (seven circuits)

Quick Release
Five levels (prewired)

Catalog Number 856T-BA3P10C
10 cm Pole for 120/240V AC (three circuits)

856T	-		B	24	Q10	C
		a	b	c	d	e

a	
Network Option	
Code	**Description**
Blank	No network option

b	
Housing Color	
Code	**Description**
B	Black

c	
Voltage	
Code	**Description**
24	24V AC/DC, seven circuits
A3	90...250V AC, three circuits
A7	90...250V AC, seven circuits

d	
Mounting Style	
Code	**Description**
SN	1/2 in. NPT surface mount
VM	Vertical mount
SH	Surface mount, preinstalled mounting hardware
P10	10 cm (3.9 in.) aluminum pole mount
P25	25 cm (9.8 in.) aluminum pole mount
P40	40 cm (15.7 in.) aluminum pole mount
P60	60 cm (23.6 in.) aluminum pole mount
T10	10 cm (3.9 in.) threaded tube (M20)
T25	25 cm (9.8 in.) threaded tube (M20)
Q10	10 cm (3.9 in.) quick release (1)
Q25	25 cm (9.8 in.) quick release (1)
QD5	5-pin M12 connector, M30 mounting thread (1)
QD8	8-pin M12 connector, M30 mounting thread (1)

(1) Can only be used with Voltage code 24 (Table c).

e	
Cap Option	
Code	**Description**
C	Cap included

Pre-configured Control Tower Lights, 1...7 Modules

856TC -		P10	B	24	Y	4	B	5	B	3	R	7	Y	6	R	8	B	6
	a	b	c	d	e	f	e	f	e	f	e	f	e	f	e	f	e	f
					(Level 1, e+f)		(Level 2, e+f)		(Level 3, e+f)		(Level 4, e+f)		(Level 5, e+f)		(Level 6, e+f)		(Level 7, e+f)	

a	
Network Options	
Code	**Description**
Blank	No network option
L	IO-Link communication (1)

b	
Base Type	
Code	**Description**
SN	1/2 in. NPT surface mount
VM	Vertical mount
SH	Surface mount, preinstalled mounting hardware
P10	10 cm (3.9 in.) aluminum pole mount
P25	25 cm (9.8 in.) aluminum pole mount
P40	40 cm (15.7 in.) aluminum pole mount
P60	60 cm (23.6 in.) aluminum pole mount
Q10	10 cm (3.9 in.) quick release (2) (3)
Q25	25 cm (9.8 in.) quick release (2) (3)
QD5	5-pin M12 connector (2) (4)
QD8	8-pin M12 connector (2)
T10	10 cm (3.9 in.) threaded tube (M20)
T25	25 cm (9.8 in.) threaded tube (M20)
X	No base (modules only) (5)

c	
Housing Color	
Code	**Description**
B	Black

(1) IO-Link communication is available with Base Type codes SN, VM, SH, P10, P25, P40, P60, T10, and T25 only (Table b).
(2) Must be used with Voltage code 24 (Table d).
(3) Maximum number of circuits is five.
(4) Maximum number of circuits is four.
(5) Voltage code Blank (Table d) must be for this option.

d	
Voltage	
Code	**Description**
24	24V AC/DC, seven circuits (1)
A3	90...250V AC, three circuits
A7	90...250V AC, seven circuits
Blank	For use with Base Type code X only (Table b)

e	
Module Type	
Code	**Description**
Y	Steady LED
B	Multi-function LED steady/flashing/strobe 1/strobe 2
R	Rotating
MC	7-color LED (RGB) (2) (3)
P	Top mount piezo sounder (4)
T	Transducer (4) (5)
D	Beacon, steady/flashing (4)
K	Beacon, strobe 1/strobe 2 (4) (6)
Z	Beacon, rotating (4) (7)
MB	Beacon, multicolor (2) (3) (4)
W	In-line piezo sounder
H	Recordable sounder (4) (8)

f	
Output Color/Sound	
Code	**Description**
1	Sound module (9)
3	Green
4	Red
5	Amber
6	Blue
7	White
8	Yellow
9	Magenta (10)
Blank	For use with Module Type code MC and MB only (Table e)

(1) For IO-link configurations, Voltage code 24 is 24V DC only.
(2) Output Color code must be Blank (Table f).
(3) Can use three circuits to display up to seven colors, two circuits to display three colors, or one circuit to display one color.
(4) Must be in top position.
(5) Can use three circuits to play up to seven tones, two circuits to play three tones, or one circuit to play one tone.
(6) Can only be used with Output Color codes 4, 5, or 6 (Table f).
(7) Can only be used with Output Color codes 4 or 5 (Table f).
(8) Can use three circuits to play up to seven messages, two circuits to play three messages, or one circuit to play one message.
(9) Can only be selected with Module Type codes P, H, T, and W (Table e).
(10) Cannot be used with Module Type codes R, D, K, and Z (Table e).

Accessories

	Description	Cat. No.
	Replacement O-ring for lenses and bases (bag of 1)	856T-ARNG
	Replacement flat gasket for SN and SH surface bases (bag of 1)	856T-ASFG
	Replacement vertical mount gasket (bag of 1)	856T-AVFG
	Cap (black)	856T-ABCAP
	Transition module for mounting Bulletin 856T modules on existing Bulletin 855T DeviceNet bases (five circuits, max)	856T-ATM
	Diffuser kit	856T-ADK
	Vertical Mount Kit Kit includes vertical bracket and set of three sealing washers. For use with 856T and 855E pole mount bases, 856T surface mount bases, and 856T M12 QD bases.	855T-AVM
	M5 x 50 mm mounting screws (bag of 4) For mounting Bulletin 856T pole foot base to Bulletin 855T pole connection box	856T-AJBS

Specifications

Table 125 - Shock and Vibration (1)

Attribute		Based on the weight and style of mounting; tower lights are subject to damage from shock and vibration. The following are reference guidelines for maximum acceptable conditions.			
		Control Tower Stack Lights		IO-Link Module	
		Shock, Peak [G]	Vibration, Peak [G]	Shock, Peak [G]	Vibration, Peak [G]
Surface mount base	24V and AC three-circuit	50	3	20 (2)	3 (2)
	AC seven-circuit	25	3	—	—
Vertical mount base		50	3	50	3
Pole/tube base	10 cm	50	3	50	3
	25 cm	50	3	50	3
Pole base	40 cm	50	3	50	3
	60 cm	50	3	50	3
QR base		50	3	—	—
QD base		50	3	—	—
Recommended wire size		24...14 AWG (UL)/0.2...1.5 mm^2 (IEC) (push-in type terminal block)			

(1) For the IO-Link module (856T-B24LC), vibration is according to EN 60068-2-6, EN60721-3-2 Class 2M2 and shock is according to EN60068-2-27.
(2) These values are for a surface mount base with seven modules stacked. If only five modules are stacked, shock, peak = 30 G and vibration, peak = 3 G.

Table 126 - Environmental

Attribute		Control Tower Stack Lights and IO-Link Module
Ingress ratings		UL Type 4/4X/ 13, IP66/67 (1) Suitable for indoor and outdoor use
Temperature ranges	Operating	-30...+70 °C (-22...+158 °F) (2)
	Storage	-30...+85 °C (-22...+185 °F)
Relative humidity		90% noncondensing

(1) QR bases are IP66.
(2) -30...+45 °C (-22...+113 °F) for QD bases.

Table 127 - Materials

Device	Part	Material [1]
Control Tower stack lights	Bases, cap, sound module housing, lens, pole foot, diffuser	Polycarbonate
	Threaded tube/pole bases	Aluminum with clear powder coat
	Gaskets and O-rings	Nitrile rubber
	Mounting screw washers	Polypropylene
IO-Link module	Housing and cover	Polycarbonate
	M12 connector	Nylon
	Connector O-rings	Silicone [2]
	IO-Link module O-ring	Nitrile rubber

(1) RoHS compliant
(2) The O-ring was tested to be well below 1% by weight when tested according to GMW17224 (Test for Volatiles in Silicone Rubber).

Table 128 - Decibel Rating (Sound Modules)

Device	Decibel Rating [1]	Volume Control	Number of Tones/Messages
856T-BP1, piezo, top mount	105 dB(A), max	Adjustable -20 dB	8
856T-BTR3, transducer	Rated: 105 dB(A) (107 dB(A), max @ 2700 Hz)	Adjustable -10 dB (also three adjustment pots for tone customization)	80 tones, seven stages configured via DIP switch and three inputs
856T-BPL1, piezo, in-line	102 dB(A), max	Adjustable -20 dB	8
856T-BH3, recordable	Voice: 90 dB(A), max Tone: 95 dB(A)	Adjustable -10 dB	Plays up to seven user-recorded voice messages

(1) All dB(A) ratings are determined at a distance of 1 m (3.3 ft) from sound module.

Table 129 - IO-Link Module Specifications

Attribute		IO-Link Module (856T-B24LC)
Status indicator		Bicolor (red/green) LED
Communication rate		COM3 (230.4 kBd)
IO-Link cycle time, min		2 ms
Process data	Input bit length	48 bits (6 Bytes)
	Output bit length	56 bits (7 Bytes)
IO-Link standard (version)		1.1.2
M12 connector		5-pin, Class B
MTTF		41,600 hr

Table 130 - Light Output

Device		Light Output [mcd]
Steady		
856T-BT3 (green)		7200
856T-BT4 (red)		5200
856T-BT5 (amber)		9500
856T-BT6 (blue)		1300
856T-BT7 (white)		17,200
856T-BT8 (yellow)		15,800
856T-BT9 (magenta)		5600
Multifunction		
856T-BB3 (green)	Four functions: • Steady • Flashing (2 Hz) • Single strobe (1.4 Hz) • Double flash strobe (1.4 Hz) (Selectable via DIP switches)	12,600
856T-BB4 (red)		6900
856T-BB5 (amber)		16,700
856T-BB6 (blue)		2300
856T-BB7 (white)		30,300
856T-BB8 (yellow)		27,800
856T-BB9 (magenta)		9900
Rotating		
856T-BR3 (green)	Two rotating speeds: • Speed 1 = 90 RPM • Speed 2 = 180 RPM (Selectable via DIP switch)	6300
856T-BR4 (red)		5000
856T-BR5 (amber)		8300
856T-BR6 (blue)		1100
856T-BR7 (white)		15,000
856T-BR8 (yellow)		13,800

Device		Light Output [mcd]
Multicolor		
856T-BMC	Seven colors: • Green • Red • Yellow • Blue • White • Magenta • Turquoise (Selectable via three inputs)	4800
Beacon (Steady/Flashing)		
856T-BGB3 (green)	Steady or flashing function selectable via DIP switch or by using two inputs (Flashing frequency = 2 Hz)	8400
856T-BGB4 (red)		7200
856T-BGB5 (amber)		11,100
856T-BGB6 (blue)		1500
856T-BGB7 (white)		20,000
856T-BGB8 (yellow)		18,400
Beacon (Strobe)		
856T-BSB4 (red)	Single or double strobe function selectable via DIP switch (1.4 Hz)	10,600
856T-BSB5 (amber)		21,300
856T-BSB6 (blue)		2900
Beacon (Rotating)		
856T-BRB4 (red)	Two speeds: • Speed 1 = 90 RPM • Speed 2 = 180 RPM (Selectable via DIP switch)	7500
856T-BRB5 (amber)		23,200
Beacon (Multicolor)		
856T-BMB	Seven colors: • Green • Red • Yellow • Blue • White • Magenta • Turquoise (Selectable via three inputs)	8100

Table 131 - Operating Voltage (1)

Device	Operating Voltage	
	Nominal Voltage	Voltage Range
All modules	24V AC/DC, 50/60 Hz	21...30V DC/ 21.6...26.4V AC
856T-B24C		
856T-BAC3C, three-circuit SMPS	120/240V AC	90...250V AC, 50/60Hz
856T-BAC7C, seven-circuit SMPS	120/240V AC	90...250V AC, 50/60Hz
856T-B24LC (2)	24V DC	18...30V DC per IO-Link specification

(1) Maximum input switching frequency for SMPS (that is, from a PLC) is 5 Hz.
(2) At 24V DC, operating current consumption is 30 mA and inrush current is 0.1 A.

Table 132 - Current Consumption and Life

Device	Nominal Current	Inrush Current	Life
Power Modules			
856T-B24C	—	—	—
856T-BAC3C, three-circuit SMPS	150 mA, max	6 A, max	30,000 hr
856T-BAC7C, seven-circuit SMPS	340 mA, max	3.5 A, max	30,000 hr
Sound Modules			
856T-BP1, piezo, top mount	120 mA	1.8 A DC 2.15 A AC	20,000 hr
856T-BTR3, transducer	200 mA	1.06 A DC 1.24 A AC	20,000 hr
856T-BPL1, piezo, in-line	120 mA	1.8 A DC 2.15 A AC	20,000 hr
856T-BH3, recordable	140 mA	0.5A DC 1.0 A AC	10,000 hr
Steady Light Modules			
856T-BT3 (green)	58 mA	—	>60,000 hr
856T-BT4 (red)		—	>40,000 hr
856T-BT5 (amber)		—	>60,000 hr
856T-BT6 (blue)		—	
856T-BT7 (white)		—	
856T-BT8 (yellow)		—	
856T-BT9 (magenta)		—	
Multifunction Light Modules			
856T-BB3 (green)	100 mA	1.79 A DC 2.66 A AC	>60,000 hr
856T-BB4 (red)		1.82 A DC 2.66 A AC	>40,000 hr
856T-BB5 (amber)		1.79 A DC 2.66 A AC	>60,000 hr
856T-BB6 (blue)			
856T-BB7 (white)			
856T-BB8 (yellow)			
856T-BB9 (magenta)			

Device	Nominal Current	Inrush Current	Life
Rotating Light Modules			
856T-BR3 (green)	40 mA	1.79 A DC 2.64 A AC	>60,000 hr
856T-BR4 (red)	45 mA	1.79 A DC 2.66 A AC	>40,000 hr
856T-BR5 (amber)	40 mA	1.79 A DC 2.64 A AC	>60,000 hr
856T-BR6 (blue)			
856T-BR7 (white)			
856T-BR8 (yellow)			
Multicolor Light Modules			
856T-BMC	110 mA	1.30 A DC 1.94 A AC	30,000 hr
Beacon Light Modules (Steady/Flashing)			
856T-BGB3 (green)	100 mA	0.74 A DC 1.24 A AC	>60,000 hr
856T-BGB4 (red)	108 mA	0.70 A DC 1.16 A AC	>40,000 hr
856T-BGB5 (amber)	100 mA	0.74 A DC 1.24 A AC	>60,000 hr
856T-BGB6 (blue)			
856T-BGB7 (white)			
856T-BGB8 (yellow)			
Beacon Light Modules (Strobe)			
856T-BSB4 (red)	190 mA	0.76 A DC 1.11 A AC	>40,000 hr
856T-BSB5 (amber)		0.77 A DC 1.11 A AC	>60,000 hr
856T-BSB6 (blue)			
Beacon Light Modules (Rotating)			
856T-BRB4 (red)	65 mA	0.74 A DC 1.09 A AC	>40,000 hr
856T-BRB5 (amber)		0.75 A DC 1.11 A AC	>60,000 hr
Beacon Light Modules (Multicolor)			
856T-BMB	200 mA	1.65 A DC 2.46 A AC	30,000 hr

Table 133 - Certifications

70 mm Control Tower Stack Lights	IO-Link Module (856T-B24LC)
• UL 60947-5-1 • CSA C22.2 No. 14 • CE Marked – EN 60947-5-1:2004 + A1:2009 – EN 61000-6-2:2005 – EN 61000-6-3:2007 + A1:2011 – EN 50581: 2012 2014/35/EU (Low Voltage Directive) 2014/30/EU (EMC Directive) 2011/65/EU (RoHS Directive) • c-UL-us Listed (File No. E14840, Guides NKCR, NKCR7) • KCC (Registration No. R-REM-RAA-856T) • China RoHS • WEEE • RCM (EN 61000-6-2:2005 and EN 61000-6-3:2007 + A1:2011)	• c-UL-us • CE (EMC and RoHS) • EMC compliance: 60947-5-1 standard • UKCA • RCM • KCC • Morocco

Approximate Dimensions

Dimensions in millimeters (inches). Dimensions are not intended to be used for manufacturing purposes.

Figure 13 - Pole Mount Bases

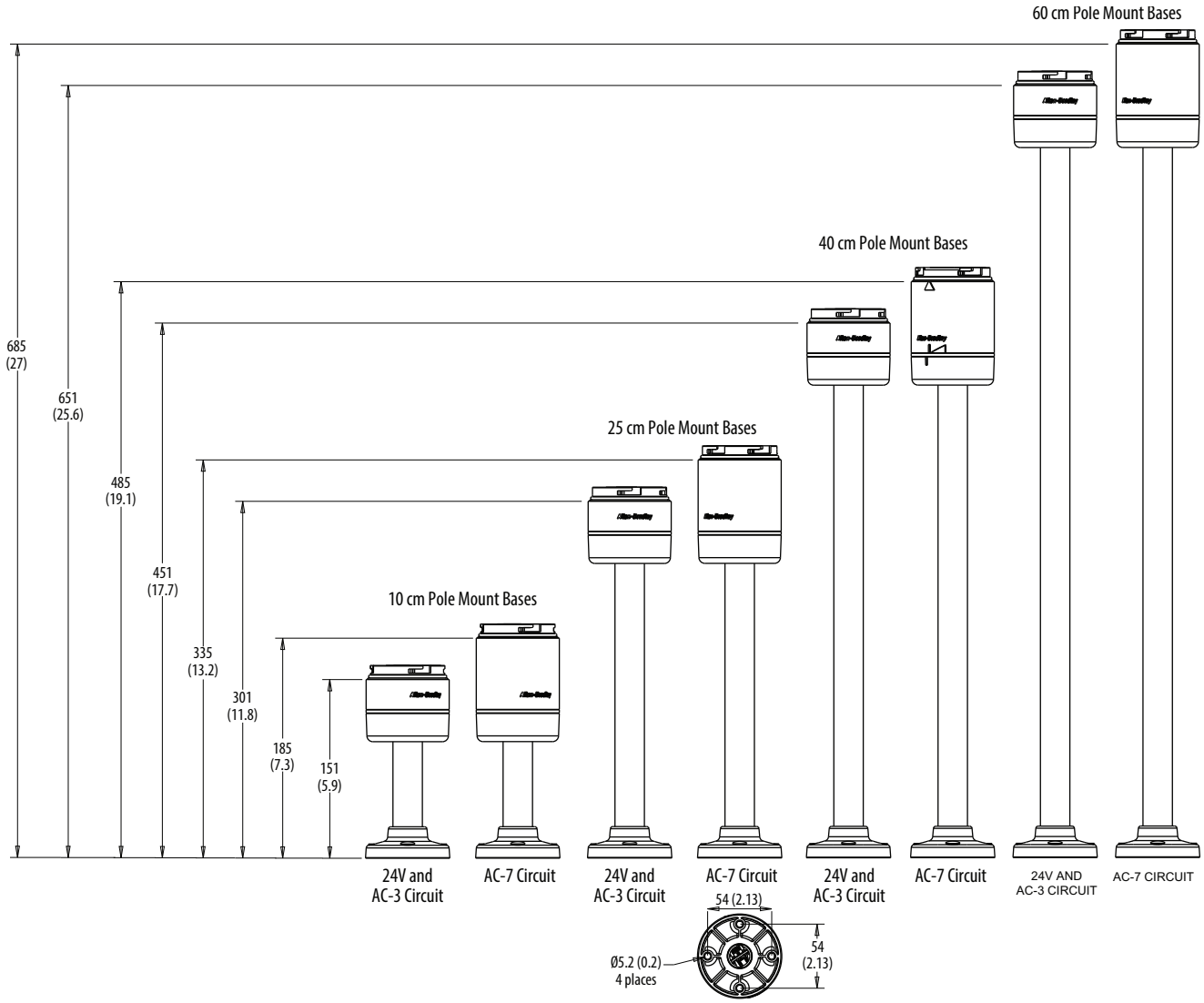

Dimensions in millimeters (inches). Dimensions are not intended to be used for manufacturing purposes.

Figure 14 - LED Light Modules

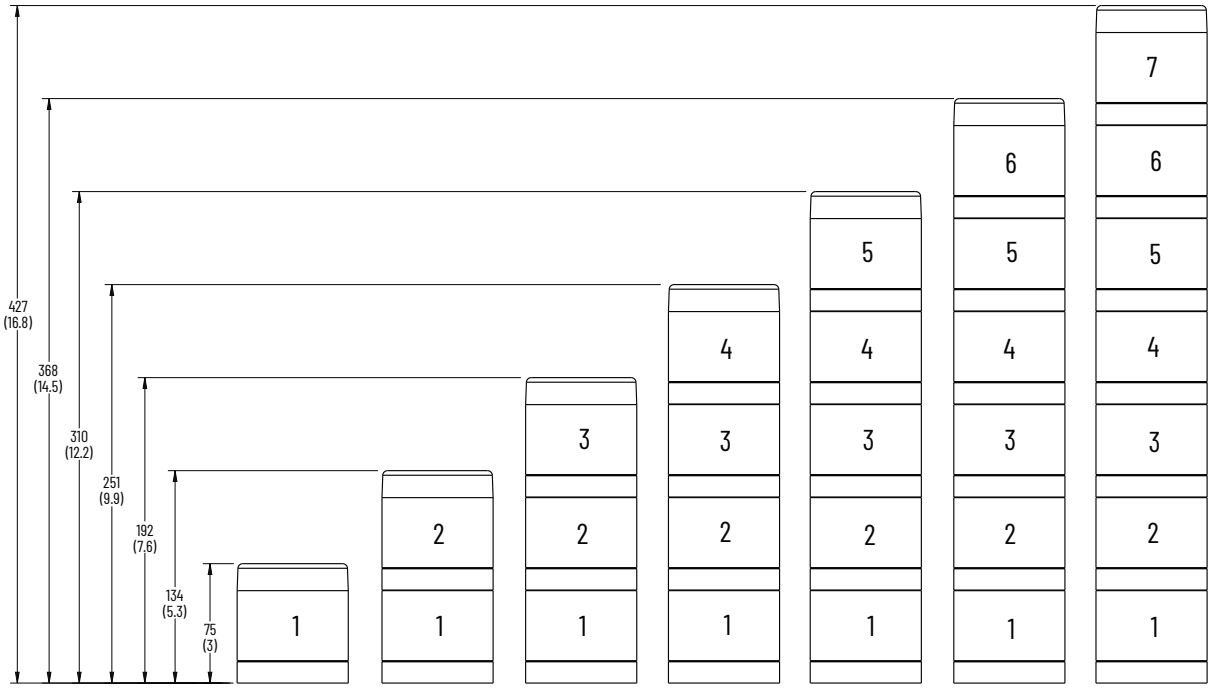

Figure 15 - IO-Link Module Dimensions

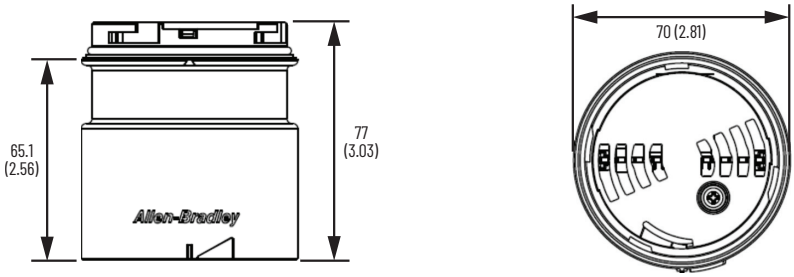

Figure 16 - Component and Accessory Dimensions

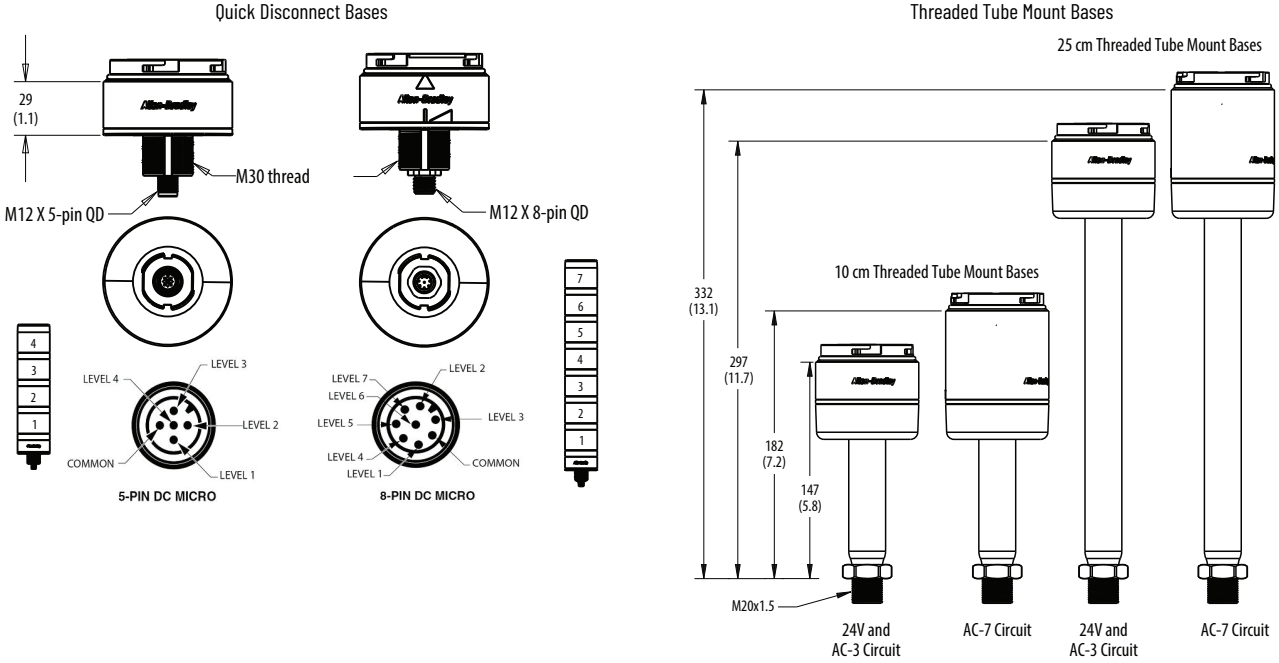

Dimensions in millimeters (inches). Dimensions are not intended to be used for manufacturing purposes.

Figure 17 - Component and Accessory Dimensions

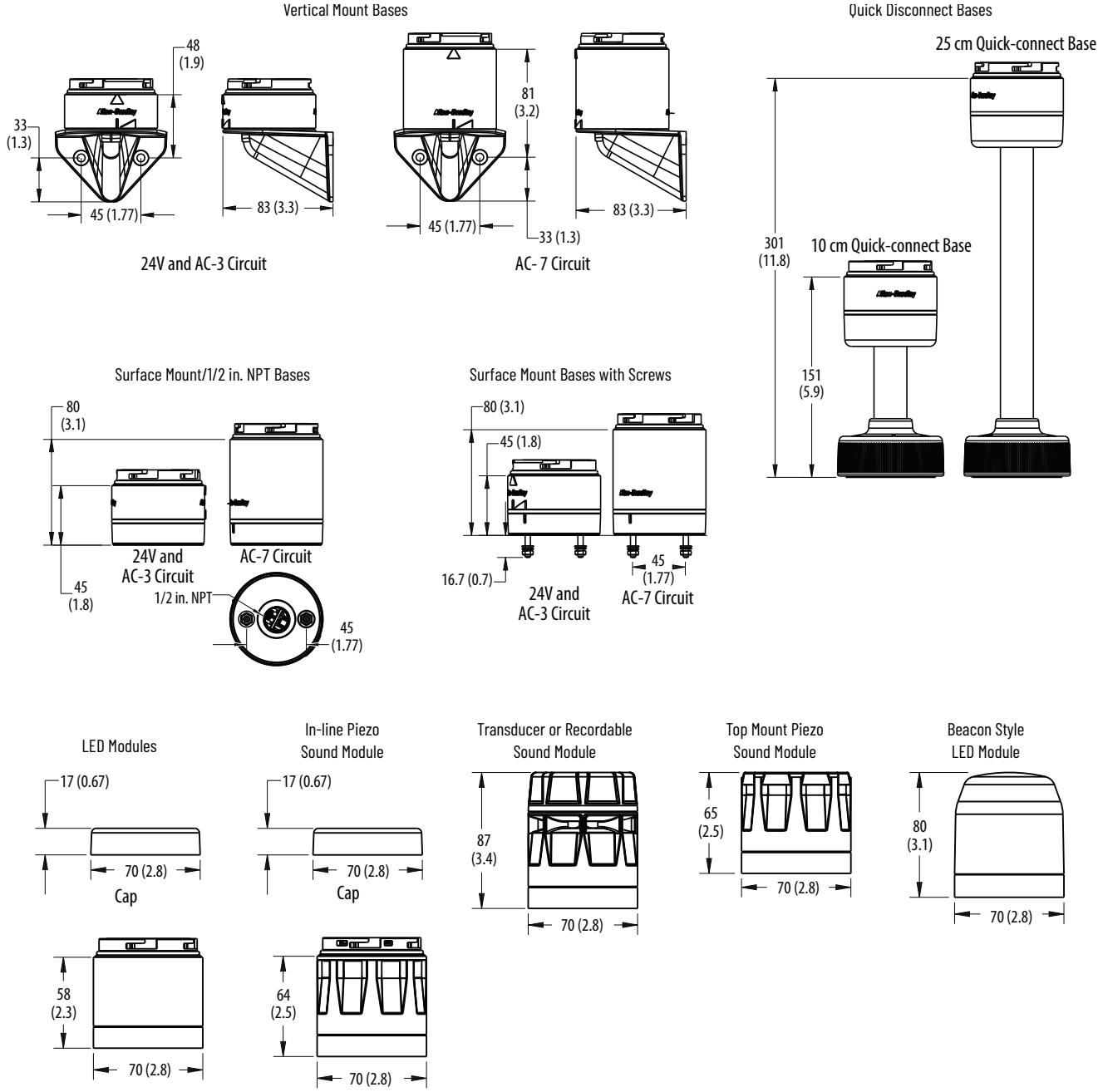

These devices are designed to communicate the status of different conditions in the machine or critical equipment in a compact size housing. Our signal lights are available in configurations from two to five light indicators with the ability to add the sound in the same unit. These devices provide the versatility to meet your application requirements without any mounting orientation restriction. We offer two color enclosures that allow you to choose the one that best fits the aesthetics of your machine or equipment.

Pre-assembled Wall-mount Signal Lights, 2...5 Light Levels

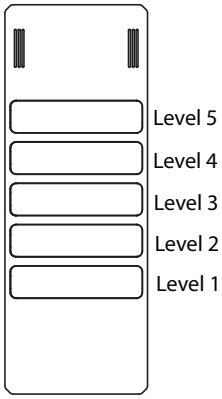

855W	_____	-	G	10	Y	7	Y	6	Y	3	Y	5	L	4	P1
	a		b	c	d	e	d	e	d	e	d	e	d	e	f
					(Level 1, d+e)		(Level 2, d+e)		(Level 3, d+e)		(Level 4, d+e)		(Level 5, d+e)		

a	
Network Option	
Code	**Description**
Blank	No network option

b	
Housing Color	
Code	**Description**
C	Chrome plated
G	Gray

c	
Voltage	
Code	**Description**
24	24V AC/DC
10	120V AC
20	240V AC

d	
Module Type	
Code	**Description**
Y	Steady LED
L	Flashing LED

e	
Lens Color	
Code	**Description**
3	Green
4	Red
5	Amber
6	Blue
7	Clear
8	Yellow

f	
Sound	
Code	**Description**
Blank	No sound
P1	Piezo sounder (continuous/pulsing)

Specifications

Table 134 - Environmental

Attribute		Value
Ingress ratings	Light/sound modules	UL Type 4/4X/13, IP65
Temperature ranges	Operating	-25...+50 °C (-13...+122 °F)
	Storage	-25...+85 °C (-13...+185 °F)

Table 135 - Materials

Part	Material
Lenses and base	Polycarbonate (94V-0)
Cover	ABS
Rubber seals and gaskets	NBR 70

Table 136 - Operating Voltage

Device	Operating Voltage		
	24V AC/DC	120V AC	240V AC
Light modules and sound modules	24V AC/DC (±10%)	110V AC, 50 Hz (±10%) 120V AC, 60 Hz (±10%)	230V AC, 50 Hz (±10%) 240V AC, 60 Hz (±10%)

Table 137 - Current Consumption

Device	Current Consumption [mA]		
	24V AC/DC	120V AC	240V AC
Steady or flashing LED	43 mA per channel, max	33 mA per channel, max	30 mA per channel, max
Piezo sounder	62	24	24

Table 138 - Leakage Current Impact

All light and sound modules can absorb up to 3 mA of leakage current from solid-state outputs without module activation.

Table 139 - Mechanical

Attribute		Value
Design life rating (average life under static, no vibration conditions)	Steady or flashing LED	30,000...50,000 hr
	Piezo sounder	>10,000 hr
Frequency	Flashing LED	2 Hz
Decibel rating	Piezo sounder	90 dB(A) (potentiometer adjustable down to 70 dB(A)) All dB(A) ratings are determined at a distance of 1 m (3.3 ft) from the sound module

Approximate Dimensions

Dimensions in millimeters (inches). Dimensions are not intended to be used for manufacturing purposes.

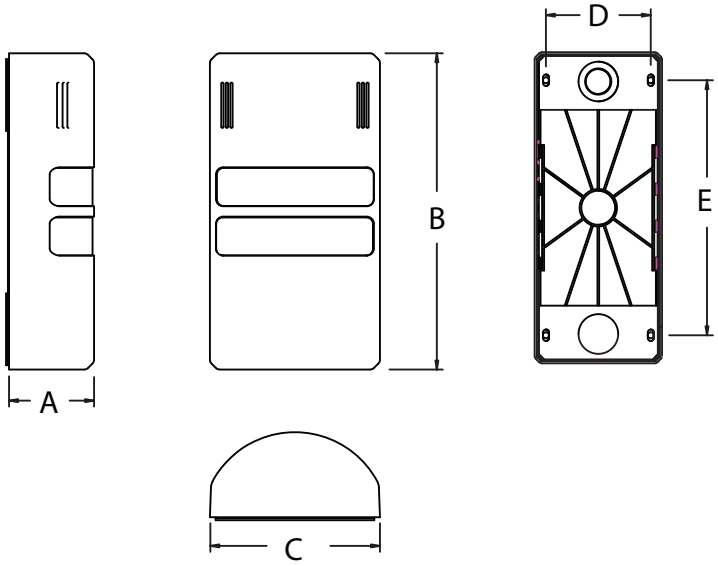

Number of Levels	Dimension A [mm (in.)]	Dimension B [mm (in.)]	Dimension C [mm (in.)]	Dimension D [mm (in.)]	Dimension E [mm (in.)]
2	45 (1.77)	167.4 (6.59)	90 (3.54)	74 (2.91)	125 (4.92)
3		193.5 (7.62)			150 (5.91)
4		219.6 (8.65)			180 (7.09)
5		245.7 (9.67)			210 (8.27)

These devices are designed to alert you to critical equipment and system needs on the plant floor. These alarms are available in a wide variety of light and sound functions, sizes, colors, voltages, and mounting options. These devices are also offered pre-assembled to save time.

- Provides low power consumption and long life
- Offers horn only or horn and attached beacon with six lens colors
- Offers 24V DC, 120V AC, and 240V AC voltage options
- Includes glass reinforced plastic and impact resistant ABS enclosure
- Offers -20...+55 °C (-4...+131 °F) operating temperature for Class 1 Division 2
- NEMA Type 4/4X/13, IP 66/67 certified
- UL listed, ATEX/IECEx certified

Alarm Horn Sounders

855XH	-	BN	D30	B
		a	b	c

a	
Product Type	
Code	**Description**
BN	1/2 in. NPT and M20x1.5 conduit entrance, black housing

b	
Voltage	
Code	**Description**
D30	10...30V DC
A10	115...120V AC
A20	220...230V AC

c	
Horn Type	
Code	**Description**
A	110 dB @ 1 m (3.3 ft), 45 tone, 3 stage
B	117 dB @ 1 m (3.3 ft), 45 tone, 3 stage

Xenon Strobe Beacons

855XB	-	BN	A10	B	4
		a	b	c	d

a	
Product Type	
Code	Description
BN	1/2 in. NPT and M20x1.5 conduit entrance, black housing

b	
Voltage	
Code	Description
D24	24V DC
A10	115...120V AC
A20	220...230V AC

c	
Beacon Type	
Code	Description
A	Xenon strobe - 5 J, 1 Hz
B	Xenon strobe - 10 J, 1 Hz
L	LED - multifunction

c	
Lens Color	
Code	Description
4	Red
5	Amber
7	Clear

Combined Horn Sounder and Strobe Beacons

Xenon/Flare

LED/Radial

855XC	-	BN	A10	A	3
		a	b	c	d

a	
Product Type	
Code	Description
BN	1/2 in. NPT and M20x1.5 conduit entrance, black housing

b	
Voltage	
Code	Description
D24	24V DC
A10	115...120V AC
A20	220...230V AC

c	
Horn/Beacon Type	
Code	Description
A	Xenon strobe - 5 J, Flare horn 110 dB @ 1 m (3.3 ft), 45 tones, 3 stages
RL	LED - multifunction Radial horn 110dB @ 1 m (3.3 ft), 45 tones, 3 stages

c	
Lens Color	
Code	Description
4	Red
5	Amber
7	Clear

Specifications

Table 140 - Mechanical (Bul. 855XH, 855XB, and 855XC)

Attribute	Value
Shock	30 G peak
Vibration	2 G peak

Table 141 - Environmental (Bul. 855XH, 855XB, and 855XC)

Attribute		Value
Ingress ratings		UL Type 4/4X13, IP 66/67
Temperature ranges	Operating	-20...+55 °C (-4...+131 °F)
	Storage	-40...+70 °C (-40...+158 °F)
Relative humidity		90% at 20 °C (68 °F)

Table 142 - Materials (Bul. 855XH, 855XB, and 855XC)

Part		Value
Housing		PPS: RYTON type R-4 02 XT
Lens		Polycarbonate over glass
Lens cage		Stainless steel 304/A2
Mounting bracket		Stainless steel 304/A3
O-ring		Viton (housing and glass dome)
Horn	Flare	Polycarbonate
	Radial	Stat-Kon
Screws, washers, and nuts		Stainless steel 302/304
Dome glass		Borosilicate glass
Cemented joint material (1)		Moisture-cure silicon adhesive 7091

(1) Horn (855XH) and combo (855XC) only.

Table 143 - Performance Ratings

Attribute	855XH (1)		855XC
	855XH-BNxxxAy	855XH-BNxxxBy	
Sound output @ 1 m (3.3 ft) (2)	110 dB(A)	117 dB(A)	110 dB(A)
Volume control	Adjustable -8 dB		Adjustable -8 dB
Number of tones	45		45
Stages	3		3

(1) Replace the *y* with color code: Red (4), Amber (5), or Clear (7).
(2) SPL data ±3dB(A). Measured at optimum voltage.

Table 144 - Light Output

Attribute	855XB-BNxxxAy 855XC-BNxxxAy (Xenon 5J) (1)	855XB-BNxxxBy (Xenon 10J) (1)	855XB-BNxxxLy 855XC-BNxxxRLy (LED) (1)
Measured ref. to I.E.S. (2)	34,122 cd peak 108 cd effective	61,164 cd peak 272 cd effective	87 cd effective (high power steady) 160 cd effective (1 Hz flash)
Calculated from energy [J]	500,000 cd peak 250 cd effective	1,00,000 cd peak 500 cd effective	—

(1) Replace the *y* with color code: Red (4), Amber (5), or Clear (7).
(2) All candela data is representative of performance with clear lens at optimum voltage

Table 145 - Beacon Flashing Frequency

Device (1)	Flashing Frequency
855XB-BNxxxAy 855XC-BNxxxAy	1 Hz
855XB-BNxxxBy	1 Hz
855XB-BND24Ly 855XC-BND24Ly	High: Steady, 1 Hz, 2 Hz, 2X, 3X, 80FPM Low: Steady (S1) + 1 Hz flashing (S2) + 3X (S3)
855XB-BNA10Ly 855XC-BNA10Ly	High: Steady, 1 Hz, 2 Hz, 2X, 3X, 80FPM Low: Steady
855XB-BNA20Ly 855XC-BNA20Ly	High: Steady, 1 Hz, 2 Hz, 2X, 3X, 80FPM Low: Steady

(1) Replace the *y* with color code: Red (4), Amber (5), or Clear (7).

Table 146 - Operating Voltage and Current Consumption

Cat. No. (1)	Operating Voltage	Current Consumption, Nom	Inrush Current	Leakage Immunity
855XH-BND30A	10...30V DC	284 mA	16.79 A @ 0.29 ms	>3mA
855XH-BNA10A	115V AC 50/60Hz ±10%	104 mA	1.235 A @ 6.72 ms	>3 mA
855XH-BNA20A	230V AC 50/60Hz ±10%	54 mA	1.413 A @ 0.576 ms	>3mA
855XH-BND30B	10...30V DC	280 mA	13.53 A @ 0.19 ms	>3 mA
855XH-BNA10B	115V AC 50/60Hz ±10%	142 mA	1.405 A @ 4.03 ms	>3 mA
855XH-BNA20B	230V AC 50/60Hz ±10%	76 mA	1.722 A @ 0.96 ms	>3 mA
855XB-BND24Ay	20...28V DC	275 mA	6.40 A @ 1.15 ms	>3 mA
855XB-BNA10Ay	115V AC 50/60Hz ±10%	80 mA	963 mA @ 3.07 ms	>3 mA
855XB-BNA20Ay	230V AC 50/60Hz ±10%	30 mA	630 mA @ 0.58 ms	>3 mA
855XB-BND24By	20...28V DC	560 mA	6.71 A @ 0.77 ms	>3 mA
855XB-BNA10By	115V AC 50/60Hz ±10%	185 mA	739 mA @ 3.07 ms	>3 mA
855XB-BNA20By	230V AC 50/60Hz ±10%	107 mA	993 mA @ 1.15 ms	>3 mA
855XB-BND24Ly	18...54V DC	240 mA (Steady high power) 134 mA (Steady low power) 110 mA (1Hz Flashing)	1.9A @ 1.6 ms	>3 mA
855XB-BNA10Ly	103.5...126.5V AC 50/60 Hz	95 mA (Steady high power) 78 mA (Steady low power) 90 mA (1Hz Flashing)	1.04 A @ 11.1ms	>3mA (horn) 3 mA @ <13V AC (LED)
855XB-BNA20Ly	207...253V AC 50/60 Hz	48 mA (Steady high power) 37 mA (Steady low power) 45 mA (1Hz Flashing)	0.61 A @ 11.5ms	>3mA (horn) 3 mA @ <40V AC (LED)
855XC-BND24Ay	10...30V DC Horn 20...28V DC Beacon	284 mA Horn 275 mA Beacon	16.79 A @ 0.29 ms (horn) 6.40 A @ 1.15 ms (beacon)	>3 mA
855XC-BNA10Ay	115V AC 50/60Hz ±10%	104 mA Horn 80 mA Beacon	1.235 A @ 6.72 ms (horn) 963 mA @ 3.07 ms (beacon)	>3 mA
855XC-BNA20Ay	230V AC 50/60Hz ±10%	54 mA Horn 30 mA Beacon	1.413 A @ 0.576 ms (horn) 630 mA @ 0.58 ms (beacon)	>3 mA
855XC-BND24RLy	24V DC ±25% Horn 18...54V DC Beacon	265 mA Horn 240 mA (LED-Steady high power) 134 mA (LED-Steady low power) 110 mA (LED-1Hz Flashing)	16.79 A @ 0.29 ms (horn) 1.9 A @ 1.6 ms (beacon)	>3 mA
855XC-BNA10RLy	115V AC 50/60Hz ±10%	110 mA Horn 95 mA (LED-Steady high power) 78 mA (LED-Steady low power) 90 mA (LED-1Hz Flashing)	1.235 A @ 6.72 ms (horn) 1.04 A @ 11.1 ms (beacon)	3 mA @ <13V AC
855XC-BNA20RLy	230V AC 50/60Hz ±10%	56 mA horn 48 mA (LED-Steady high power) 37 mA (LED-Steady low power) 45 mA (LED-1Hz Flashing)	1.413 A @ 0.576 ms (horn) 0.61 A @ 11.5 ms (beacon)	3 mA @ <40V AC

(1) Replace the *y* with color code: Red (4), Amber (5), or Clear (7).

Table 147 - Wiring

Haz Loc Device (1)	Tightening Torque [N•m (lb•in)]	Wire Strip Length [mm (in.)]	Wire Cross Section	AWG (Solid/Stranded)	Voltage Rating	Temperature
855XH-BN*xxx*A	0.45 (4)	8 (0.31)	0.2...4.0 mm²	12...30	300V	-30...+105 °C (-22...+221 °F)
855XH-BN*xxx*B						
855XC-BN*xxx*Ay (beacon PCB)	0.56 (5)	7...8 (0.28...0.31)		12...24		-40...+115 °C (-40...+239 °F)
855XC-BN*xxx*Ay (horn PCB)	0.45 (4)	8 (0.31)		12...30		-30...+105 °C (-22...+221 °F)
855XC-BN*xxx*RLy (beacon PCB)	0.56 (5)	7...8 (0.28...0.31)		12...24		-40...+115 °C (-40...+239 °F)
855XC-BN*xxx*RLy (horn PCB)	0.45 (4)	8 (0.31)		12...30		-30...+105 °C (-22...+221 °F)
855XB-BN*xxx*Ay	0.56 (5)	7...8 (0.28...0.31)		12...24		-40...+115 °C (-40...+239 °F)
855XB-BN*xxx*By						
855XB-BN*xxx*RLy						

(1) Replace the *y* with color code: Red (4), Amber (5), or Clear (7).

Table 148 - Hazardous Location Certifications

Cat. No.	Description	ATEX/IECEx	NEC Class/Zone	CEC Class/Zone	Class/Div
855XH-BND30A 855XH-BNA10A 855XH-BNA20A	Flare 110dB	• II 3G Ex nA IIC T4 Gc Ta -20...+55 °C (-4...+131 °F) • II 3D Ex tc IIIC T85 °C Dc Ta -20...+55 °C (-4...+131 °F)	• Class I Zone 2 AEx nA IIC T4 Gc Ta -20...+55 °C (-4...+131 °F) • Zone 22 AEx tc IIIC T85°C Dc Ta -20...+55 °C (-4...+131 °F)	• Ex nA IIC T4 Gc Ta -20...+55 °C (-4...+131 °F) • Ex tc IIIC T85°C Dc Ta -20...+55 °C (-4...+131 °F)	• Class I, Div 2, ABCD T3C Ta -20...+55 °C (-4...+131 °F) • Class I, Div 2, ABCD T4 Ta -20...+40 °C (-4...+104 °F) • Class II, Div 2, FG T6 Ta -20...+55 °C (-4...+131 °F) • Class III T6 Ta -20...+55 °C (-4...+131 °F)
855XH-BND30B 855XH-BNA10B 855XH-BNA20B	Flare 117dB	• II 3G Ex nA IIC T4 Gc Ta -20...+55 °C (-4...+131 °F) • II 3D Ex tc IIIC T85°C Dc Ta -20...+55 °C (-4...+131 °F)	• Class I Zone 2 AEx nA IIC T4 Gc Ta -20...+55 °C (-4...+131 °F) • Zone 22 AEx tc IIIC T85°C Dc Ta -20...+55 °C (-4...+131 °F)	• Ex nA IIC T4 Gc Ta -20...+55 °C (-4...+131 °F) • Ex tc IIIC T85°C Dc Ta -20...+55 °C (-4...+131 °F)	• Class I, Div 2, ABCD T3C Ta -20...+55 °C (-4...+131 °F) • Class I, Div 2, ABCD T4 Ta -20...+40 °C (-4...+104 °F) • Class II, Div 2, FG T6 Ta -20...+55 °C (-4...+131 °F) • Class III Ta -20...+55 °C (-4...+131 °F)
855XB-BND24A* 855XB-BNA10A* 855XB-BNA20A*	Xenon 5J beacon	• II 3G Ex nA IIC T3 Gc Ta -20...+40 °C (-4...+104 °F) • II 3G Ex nA IIC T2 Gc Ta -20...+55 °C (-4...+131 °F) • II 3D Ex tc IIIC 85°C Dc Ta -20...+40 °C (-4...+104 °F) • II 3D Ex tc IIIC 100°C Dc Ta -20...+55 °C (-4...+131 °F)	• Class I Zone 2 AEx nA IIC T3 Gc Ta -20...+40 °C (-4...+104 °F) • Class I Zone 2 AEx nA IIC T2 Gc Ta -20...+55 °C (-4...+131 °F) • Zone 22 AEx tc IIIC 85°C Dc Ta -20...+40 °C (-4...+104 °F) • Zone 22 AEx tc IIIC 100°C Dc Ta -20...+55 °C (-4...+131 °F)	• Class I Zone 2 Ex nA IIC T3 Gc Ta -20...+40 °C (-4...+104 °F) • Class I Zone 2 Ex nA IIC T2 Gc Ta -20...+55 °C (-4...+131 °F) • Zone 22 Ex tc IIIC 85°C Dc Ta -20...+40 °C (-4...+104 °F) • Zone 22 Ex tc IIIC 100°C Dc Ta -20...+55 °C (-4...+131 °F)	• Class I, Div 2, ABCD T2D Ta -20...+55 °C (-4...+131 °F) • Class I, Div 2, ABCD T3 Ta -20...+40 °C (-4...+104 °F) • Class II, Div 2, FG T5 Ta -20...+55 °C (-4...+131 °F) • Class II, Div 2, FG T6 Ta -20...+40 °C (-4...+104 °F) • Class III Ta -20...+55 °C (-4...+131 °F)
855XB-BND24B* 855XB-BNA10B* 855XB-BNA20B*	Xenon 10J beacon	• II 3G Ex nA IIC T2 Gc Ta -20...+55 °C (-4...+131 °F) • II 3D Ex tc IIIC 105°C Dc Ta -20...+40 °C (-4...+104 °F) • II 3D Ex tc IIIC 120°C Dc Ta -20...+55 °C (-4...+131 °F)	• Class I Zone 2 AEx nA IIC T2 Gc Ta -20...+55 °C (-4...+131 °F) • Zone 22 AEx tc IIIC 105°C Dc Ta -20...+40 °C (-4...+104 °F) • Zone 22 AEx tc IIIC 120°C Dc Ta -20...+55 °C (-4...+131 °F)	• Class I Zone 2 Ex nA IIC T2 Gc Ta -20...+55 °C (-4...+131 °F) • Class I Zone 2 Ex nA IIC T2 Gc Ta -20...+55 °C (-4...+131 °F) • Zone 22 Ex tc IIIC 105°C Dc Ta -20...+40 °C (-4...+104 °F)	• Class I, Div 2, ABCD T2C Ta -20...+55 °C (-4...+131 °F) • Class I, Div 2, ABCD T2D Ta -20...+40 °C (-4...+104 °F) • Class II, Div 2, FG T5 Ta -20...+55 °C (-4...+131 °F) • Class II, Div 2, FG T6 Ta -20...+40 °C (-4...+104 °F) • Class III Ta -20...+55 °C (-4...+131 °F)
855XC-BND24A* 855XC-BNA10A* 855XC-BNA20A*	Combo-flare with 5J xenon	• II 3G Ex nA IIC T3 Gc Ta -20...+40 °C (-4...+104 °F) • II 3G Ex nA IIC T2 Gc Ta -20...+55 °C (-4...+131 °F) • II 3D Ex tc IIIC 85°C Dc Ta -20...+40 °C (-4...+104 °F) • II 3D Ex tc IIIC 100°C Dc Ta -20...+55 °C (-4...+131 °F)	• Class I Zone 2 AEx nA IIC T3 Gc Ta -20...+40 °C (-4...+104 °F) • Class I Zone 2 AEx nA IIC T2 Gc Ta -20...+55 °C (-4...+131 °F) • Zone 22 AEx tc IIIC 85°C Dc Ta -20...+40 °C (-4...+104 °F) • Zone 22 AEx tc IIIC 100°C Dc Ta -20...+55 °C (-4...+131 °F)	• Ex nA IIC T3 Gc Ta -20...+40 °C (-4...+104 °F) • Ex nA IIC T2 Gc Ta -20...+55 °C (-4...+131 °F) • Ex tc IIIC 85°C Dc Ta -20...+40 °C (-4...+104 °F) • Ex tc IIIC 100°C Dc Ta -20...+55 °C (-4...+131 °F)	• Class I, Div 2, ABCD T2D Ta -20...+55 °C (-4...+131 °F) • Class I, Div 2, ABCD T3 Ta -20...+40 °C (-4...+104 °F) • Class II, Div 2, FG T5 Ta -20...+55 °C (-4...+131 °F) • Class II, Div 2, FG T6 Ta -20...+40 °C (-4...+104 °F) • Class III, Div 1&2 Ta -20...+55 °C (-4...+131 °F)
855XB-BND24L* 855XB-BNA10L* 855XB-BNA20L*	LED beacon	• II 3G Ex nA IIC Gc T4 Ta -20...+55 °C (-4...+131 °F) • II 3D Ex tb IIIC Dc T85°C Ta -20...+55 °C (-4...+131 °F)	• Class I Zone 2 AEx nA IIC Gc T4 Ta -20...+55 °C (-4...+131 °F) • Zone 22 AEx tb IIIC Dc T85°C Ta -20...+55 °C (-4...+131 °F)	• Ex nA IIC Gc T4 Ta -20...+55 °C (-4...+131 °F) • Ex nA IIC Gc T4A Ta -20...+40 °C (-4...+104 °F) • Ex tb IIIC Dc T85°C Ta -20...+55 °C (-4...+131 °F)	• Class I, Div 2, ABCD T4A Ta -20...+55 °C (-4...+131 °F) • Class II, Div 2, FG T6 Ta -20...+55 °C (-4...+131 °F) • Class III, Div 1&2 Ta -20...+55 °C (-4...+131 °F)
855XC-BND24RL* 855XC-BNA10RL* 855XC-BNA20RL*	Combo-radial with LED	• II 3G Ex nA IIC Gc T3 Ta -20...+55 °C (-4...+131 °F) • II 3D Ex tc IIIC Dc T105°C Ta -20...+55 °C (-4...+131 °F) • II 3D Ex tc IIIC Dc T90°C Ta -20...+40 °C (-4...+104 °F)	• Class I Zone 2 AEx nA IIC Gc T3 Ta -20...+55 °C (-4...+131 °F) • Zone 22 AEx tc IIIC Dc T105°C Ta -20...+55 °C (-4...+131 °F) • Zone 22 AEx tc IIIC Dc T90°C Ta -20...+40 °C (-4...+104 °F)	• Ex nA IIC Gc T3B Ta -20...+55 °C (-4...+131 °F) • Ex nA IIC Gc T3C Ta -20...+40 °C (-4...+104 °F) • Ex tc IIIC Dc T105°C Ta -20...+55 °C (-4...+131 °F) • Ex tc IIIC Dc T90°C Ta -20...+40 °C (-4...+104 °F)	• Class I, Div 2, ABCD T3C Ta -20...+55 °C (-4...+131 °F) • Class II, Div 2, FG T4A Ta -20...+55 °C (-4...+131 °F) • Class II, Div 2, FG T5 Ta -20...+40 °C (-4...+104 °F) • Class III, Div 1&2 Ta -20...+55 °C (-4...+131 °F)

Table 149 - Standards and Certifications

Attribute	Bulletin 855X — Hazardous Location Horns, Beacons, and Loudspeakers
Standards compliance	• UL 508 • UL 1604 • CSA C22.2 No. 14 • CSA C22.2 No. 213 • EN/IEC 60947-1 • EN/IEC 60947-5-1
Certifications	• CE Marked • c-UL-us Listed (File No. E305538 for Beacons and File No. E305533 for Horns and Combination units) for Class I, Division 2, Groups A, B, C, and D; Class II, Division 2, Groups F & G, and Class III, Division 1 & 2

Tone Selection Table for 855XH and 855XC Units

Stage 1	Frequency Description	Switch						Stage 2	Stage 3
		1	2	3	4	5	6		
1	340 Hz, Continuous	0	0	0	0	0	0	Tone 2	Tone 5
2	800/1000 Hz @ 0.25 s, Alternating	1	0	0	0	0	0	Tone 17	Tone 5
3	500/1200 Hz @ 0.3 Hz s, Slow Whoop	0	1	0	0	0	0	Tone 2	Tone 5
4	800/1000 Hz @ 1 Hz, Sweeping	1	1	0	0	0	0	Tone 6	Tone 5
5	2400 Hz, Continuous	0	0	1	0	0	0	Tone 3	Tone 20
6	2400/2900 Hz @ 7 Hz, Sweeping	1	0	1	0	0	0	Tone 7	Tone 5
7	2400/2900 Hz @ 1 Hz, Sweeping	0	1	1	0	0	0	Tone 10	Tone 5
8	500/1200/500 Hz @ 0.3 Hz, Sweeping	1	1	1	0	0	0	Tone 2	Tone 5
9	1200/500 Hz @ 1 Hz, - DIN *PFEER P.T.A.P.*	0	0	0	1	0	0	Tone 15	Tone 2
10	2400/2900 Hz @ 2 Hz, Alternating	1	0	0	1	0	0	Tone 7	Tone 5
11	1000 Hz @ 1 Hz, Intermittent	0	1	0	1	0	0	Tone 2	Tone 5
12	800/1000 Hz @ 0.875 Hz, Alternating	1	1	0	1	0	0	Tone 4	Tone 5
13	2400 Hz @ 1 Hz, Intermittent	0	0	1	1	0	0	Tone 15	Tone 5
14	800 Hz, 0.25 s ON, 1 s OFF, Intermittent	1	0	1	1	0	0	Tone 4	Tone 5
15	800 Hz, Continuous	0	1	1	1	0	0	Tone 18	Tone 5
16	660 Hz, 150 ms ON, 150 ms OFF, Intermittent	1	1	1	1	0	0	Tone 2	Tone 27
17	544 Hz (100 ms)/440 Hz (400 ms), - NF S 32-001	0	0	0	0	1	0	Tone 2	Tone 5
18	660 Hz, 1.8 s ON, 1.8 s OFF, Intermittent	1	0	0	0	1	0	Tone 2	Tone 5
19	1.4 kHz...1.6 kHz 1 s, 1.6 kHz...1.4 kHz 0.5 s, - NFC48-265	0	1	0	0	1	0	Tone 2	Tone 5
20	660 Hz, Continuous	1	1	0	0	1	0	Tone 2	Tone 5
21	554 Hz/440 Hz @ 1 Hz, Alternating	0	0	1	0	1	0	Tone 2	Tone 5
22	544 Hz @ 0.875 s, Intermittent	1	0	1	0	1	0	Tone 2	Tone 5
23	800 Hz @ 2 Hz, Intermittent	0	1	1	0	1	0	Tone 6	Tone 5
24	800/1000 Hz @ 50 Hz, Sweeping	1	1	1	0	1	0	Tone 29	Tone 5
25	2400/2900 Hz @ 50 Hz, Sweeping	0	0	0	1	1	0	Tone 29	Tone 5
26	Bell	1	0	0	1	1	0	Tone 2	Tone 15
27	554 Hz, Continuous	0	1	0	1	1	0	Tone 26	Tone 5
28	440 Hz, Continuous	1	1	0	1	1	0	Tone 2	Tone 5
29	800/1000 Hz @ 7 Hz, Sweeping	0	0	1	1	1	0	Tone 7	Tone 5
30	300 Hz, Continuous	1	0	1	1	1	0	Tone 2	Tone 5
31	660/1200 Hz @ 1 Hz, Sweeping	0	1	1	1	1	0	Tone 26	Tone 5
32	Two-tone chime	1	1	1	1	1	0	Tone 26	Tone 15
33	745 Hz @ 1 Hz, Intermittent	0	0	0	0	0	1	Tone 2	Tone 5
34	1000 Hz & 2000 Hz @ 0.5 s, Alternating - Singapore	1	0	0	0	0	1	Tone 38	Tone 45
35	420 Hz @ 0.625 s, Australian Alert	0	1	0	0	0	1	Tone 36	Tone 5
36	500...1200 Hz 3.75 s/0.25 s, Australian Evac.	1	1	0	0	0	1	Tone 35	Tone 5
37	1000 Hz, Continuous, - *PFEER Toxic Gas*	0	0	1	0	0	1	Tone 9	Tone 45
38	2000 Hz, Continuous	1	0	1	0	0	1	Tone 34	Tone 45
39	800 Hz 0.25 s ON, 1 sec OFF, Intermittent	0	1	1	0	0	1	Tone 23	Tone 17
40	544 Hz (100 ms)/440 Hz (400 ms), - NF S 32-001	1	1	1	0	0	1	Tone 31	Tone 27
41	Motor Siren - slow rise to 1200 Hz	0	0	0	1	0	1	Tone 2	Tone 5
42	Motor Siren - slow rise to 800 Hz	1	0	0	1	0	1	Tone 2	Tone 5
43	1200 Hz, Continuous	0	1	0	1	0	1	Tone 2	Tone 5
44	Motor Siren - slow rise to 2400 Hz	1	1	0	1	0	1	Tone 2	Tone 5
45	1 kHz 1 s ON, 1 s OFF, Intermittent, - *PFEER Gen. Alarm*	0	0	1	1	0	1	Tone 38	Tone 34

Approximate Dimensions

Dimensions in millimeters (inches). Dimensions are not intended to be used for manufacturing purposes.

Figure 18 - Bulletin 855XH Horns

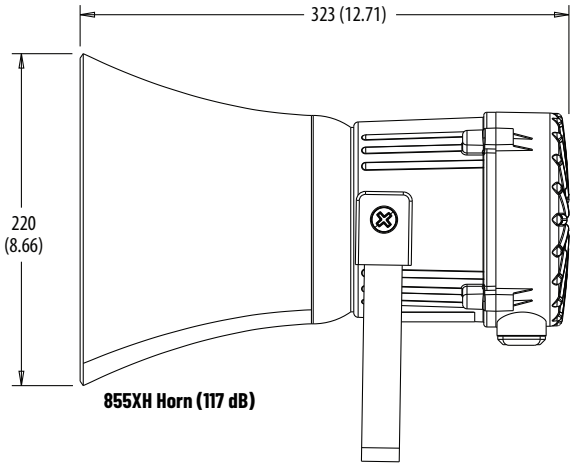

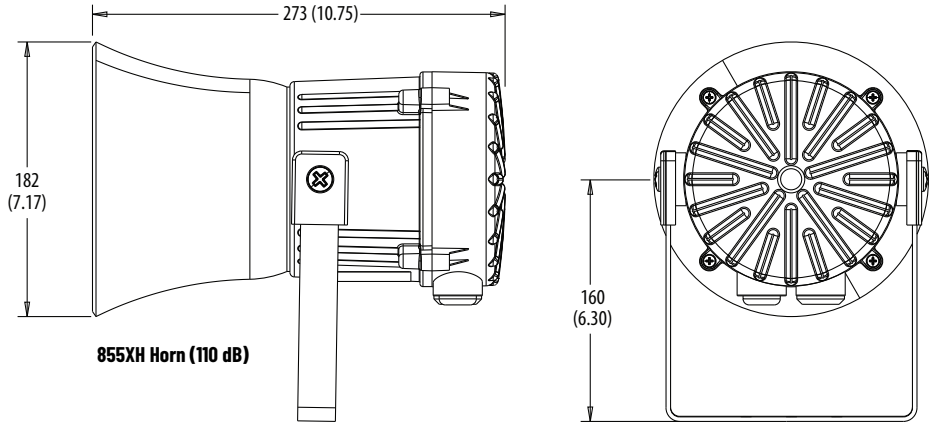

Figure 19 - Bulletin 855XB Beacons

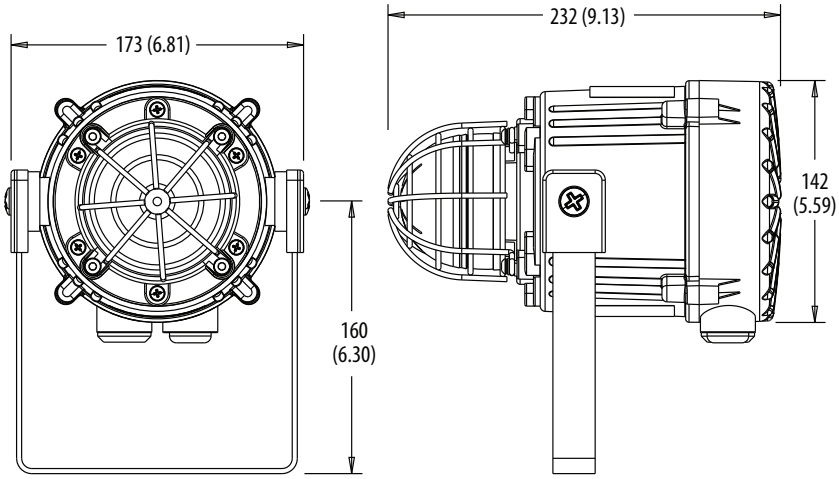

Dimensions in millimeters (inches). Dimensions are not intended to be used for manufacturing purposes.

Figure 20 - Bulletin 855XC Combo Horn/Beacon

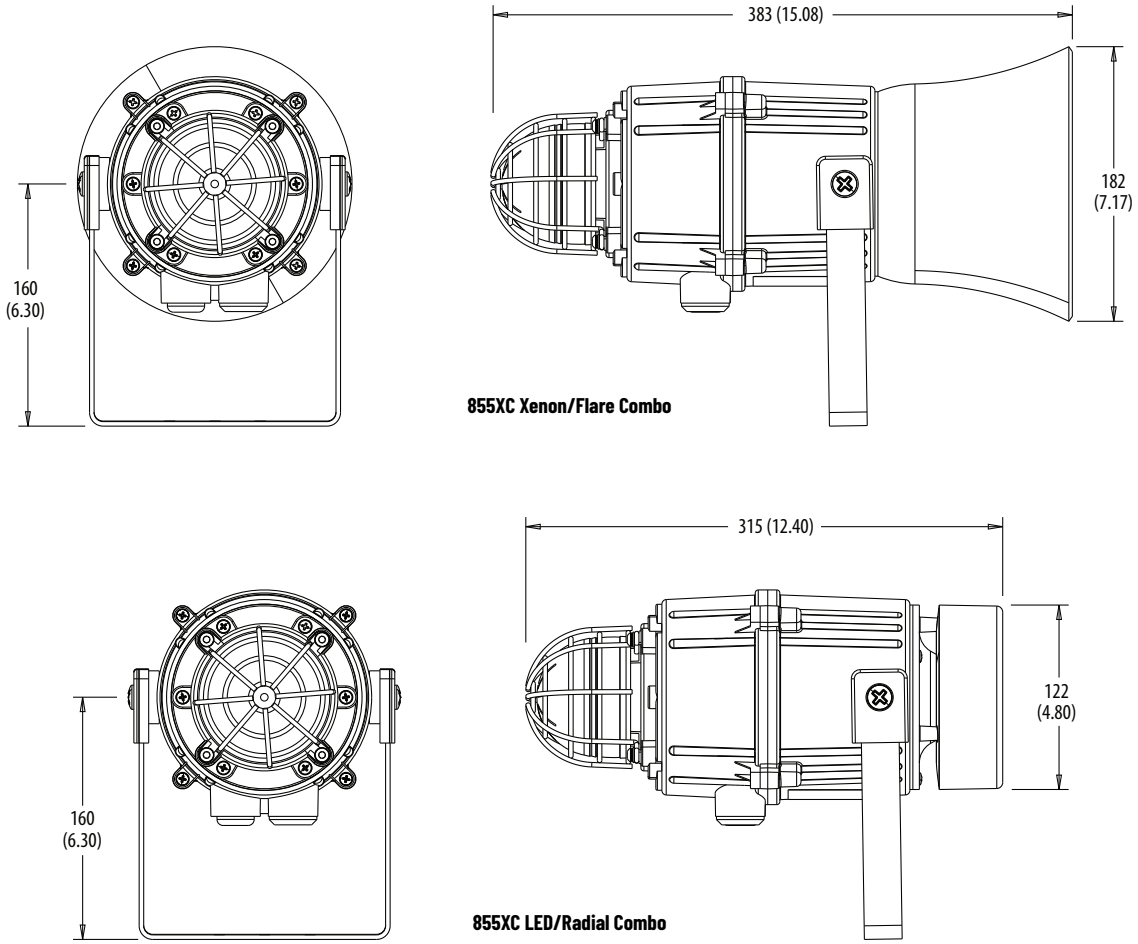

These devices are designed to alert you to critical equipment and system needs on the plant floor. These alarms are available in a wide variety of light and sound functions, sizes, colors, voltages, and mounting options. These devices are also offered pre-assembled to save time.

- Provides low power consumption and long life
- Offers horn only or horn and attached beacon with six lens colors
- Offers 24V DC, 120V AC, and 240V AC voltage options
- Includes marine-grade aluminum enclosure with a compact footprint
- Offers -40...+70 °C (-40...+158 °F) operating temperature for Class 1 Division 2
- NEMA Type 4/4X/13, IP66 certified
- ATEX/IECEx, Zone 2 and Zone 22
- Class 1 Zone 2; Class 1 Zone 22

Alarm Horn Sounders

855XM	-	C	G	M	D24	D	A	4
		a	b	c	d	e	f	g

a	
Product Type	
Code	**Description**
H	Horn only
C	Horn with attached xenon strobe

b	
Housing Color	
Code	**Description**
G	Gray

c	
Conduit Entry	
Code	**Description**
M	Two M20 x 1.5 mm conduit entries

d	
Voltage	
Code	**Description**
D24	20...28V DC (3)
D30	10...30V DC (4)
A10	115...125V AC 60 Hz
A20	215...250V AC 50 Hz

e	
Horn Type	
Code	**Description**
D	116 dB (A) @ 1 m (3.3 ft), 64 tones, 4 stages

f	
Beacon Type (1) (2)	
Code	**Description**
Blank	No light
A	5 J, strobe
B	10 J, strobe

g	
Lens Color (1)(2)	
Code	**Description**
Blank	No light
4	Red
5	Amber
7	Clear

(1) Beacon type and lens color must be Blank for Cat. No. 855XM-H.
(2) Beacon type and lens color cannot be Blank for Cat. No. 855XM-C.
(3) Voltage code D24 only valid with beacon code A and B (Table f).
(4) Voltage code D30 not valid with beacon code A and B (Table f).

Accessories

Plastic Lens Insert Color	Cat. No.
Green	855XM-ABL3
Red	855XM-ABL4
Amber	855XM-ABL5
Blue	855XM-ABL6
Clear	855XM-ABL7
Yellow	855XM-ABL8

Specifications

Table 150 - Mechanical

Device	The following are reference guidelines for maximum shock and vibration standards for the 855XM horn.	
	Shock [G]	Vibration [G]
Metal horn	40	3
Metal horn with attached beacon	30	3

Table 151 - Environmental

Attribute	Device	Value
Ingress rating	Horn and horn with attached beacon	UL Type 4/4X/13/3R, IP66
Temperature ranges	Operating	Electronic horn: -40...+50°C (-40...+122 °F) (1) Horn with attached beacon: -40...+50 °C (-40...+122 °F)
	Storage	Electronic horn and horn with attached beacon: -40...+70 °C (-40...+158 °F)

(1) -40...+158 °F (-40...+70 °C) for Class 1/Div.2

Table 152 - Materials

Part	Material
Housing (gray powder coat)	Marine grade aluminum (Al Si12 Cu)
Screws	Stainless steel
Beacon lens	Polycarbonate over glass
Lens cage	Stainless steel
Gasket (cover to base)	O-ring Fluorosilicone UL
Gasket (screw mounting hole)	Fiber washer

Table 153 - Performance Ratings

Device	Sound Output @ 1 m (3.3 ft) (1)	Volume Control	No. of Tones	Stages
Metal horn	116 dB(A), max	Adjustable -12 dB(A)	64	4
	Light Output (Xenon Strobe Beacon- 5 J)		Light Output (Xenon Strobe Beacon- 10 J)	
Red LED beacon	14.6 cd eff/120,000 cd peak		42.83 cd eff/240,000 cd peak	
Amber LED beacon	45.8 cd eff/350,000 cd peak		130.9 cd eff/700,000 cd peak	
Clear LED beacon	80.6 cd eff/500,000 cd peak		243.1 cd eff/1,000,000 cd peak	

(1) SPL data ±3 dB(A). Measured at optimum voltage.

Table 154 - Operating Voltage and Current Consumption

Device	Operating Voltage	Nominal Maximum	Inrush	Leakage Immunity
Horns				
855XM-HGMD30D	10...30V DC	160 mA @ 12V DC	611 mA, 11 ms	>3 mA
		313 mA @ 24V DC	1809 mA, 9 ms	
		225 mA @ 30V DC	2483 mA, 7 ms @ 30V DC	
855XM-HGMA10D	115V AC 60 Hz ±10%	89 mA @ 115V AC 60 Hz	710 mA, 8 ms	
855XM-HGMA20D	230V AC 50 Hz ±10%	52 mA @ 230V AC 60 Hz	350 mA, 7 ms	
Horns with Beacon				
855XM-CGMD24DA*x*	20...28V DC	513 mA @ 24V DC (5 J)	1932 mA, 10 ms	>3 mA
855XM-CGMD24DB*x*	20...28V DC	876 mA @ 24V DC (10 J)	2074 mA, 11 ms	
855XM-CGMA10DA*x*	115...125V AC, 60 Hz	174 mA @ 115V AC (5 J)	975 mA, 3 ms	
855XM-CGMA10DB*x*	115...125V AC, 60 Hz	320 mA @ 115V AC (10 J)	1031 mA, 3 ms	
855XM-CGMA20DA*x*	215...250V AC, 50 Hz	63 mA @ 230V ACDC (5 J)	1607 mA, 3 ms	
855XM-CGMA20DB*x*	215...250V AC, 50 Hz	100 mA @ 230V AC (10 J)	1628 mA, 3 ms	

Table 155 - Flashing Frequency

Device	Frequency
Horns with strobe	1 Hz

Table 156 - Miscellaneous

Attribute	Value
Cable entry	Two M20x 1.5 mm threaded holes
Terminal blocks	0.5...2.5 mm^2 (20...14 AWG)
Grounding stud	M5

Table 157 - ATEX/IECEx Certification

Zone	Group	Temperature Code
855XM Hazardous Location Metal Horn		
Zone 2	Group IIA (propane) Group IIB (ethylene) Group IIC (hydrogen/acetylene)	T1 (450 °C [842 °F]) T2 (300 °C [572 °F]) T3 (200 °C [392 °F]) T4 (135 °C [275 °F])
Zone 22 (1)	Group IIIA (combustible flyings) Group IIIB (non-conductive dust) Group IIIC (conductive dust)	—
855XM-C Hazardous Location Metal Horn with Strobe		
Zone 2	Group IIA (propane) Group IIB (ethylene) Group IIC (hydrogen/acetylene)	T1 (450 °C [842 °F]) T2 (300 °C [572 °F])
Zone 22 (2)	Group IIIA (combustible flyings) Group IIIB (non-conductive dust) Group IIIC (conductive dust)	—

(1) Maximum surface temperature for dust applications is 90 °C (194 °F).
(2) Maximum surface temperature for dust applications is 90 °C (194 °F) for Cat. No. 855XM-CGMxxxDA* and 110 °C (230 °F) for Cat. No. 855XM-CGMxxxDB*.

Table 158 - Class/Zone Ratings — US

Device	Rating
Horn	• Class I, Zone 2 AEx nA IIC T4 Gc (Ta -40...+50 °C [-40...+122 °F]) • Class I, Zone 22 AEx tc IIIC T90 °C Dc (Ta -40...+50 °C [-40...+122 °F])
Horn with 5 J strobe	• Class I, Zone 2 AEx nA IIC T2 Gc (Ta -40...+50 °C [-40...+122 °F]) • Class I, Zone 22 AEx tc IIIC 120 °C Dc (Ta -40...+50 °C [-40...+122 °F])
Horn with 10 J strobe	• Class I, Zone 2 AEx nA IIC T1 Gc (Ta -40...+50 °C [-40...+122 °F]) • Class I, Zone 2 AEx nA IIC T2 Gc for (Ta -40...+40 °C [-40...+104 °F]) • Class I, Zone 22 AEx tc IIIC 120 °C Dc (Ta -40...+50 °C [-40...+122 °F])

All horns (with and without strobe) comply with the following:

- ANSI/UL 60079-0-2013
- ANSI/UL 60079-15-2013
- ISA60079-31-2013

Table 159 - Class/Zone Ratings — Canada

Device	Rating
Horn	• Ex nA IIC T4 Gc X (Ta -40...+50 °C [-40...+122 °F]) • Ex tc IIIC T90 °C Dc (Ta -40...+50 °C [-40...+122 °F]) • Class II Div 2 FG T5 (Ta -40...+50 °C [-40...+122 °F])
Horn with 5 J strobe	• Ex nA IIC T2B Gc X (Ta -40...+50 °C [-40...+122 °F]) • Ex nA IIC T2C Gc X (Ta -40...+45 °C [-40...+113 °F]) • Ex tc IIIC T120 °C Dc (Ta -40...+50 °C [-40...+122 °F]) • Class II, Div 2 FG T4A (Ta -40...+50 °C [-40...+122 °F])
Horn with 10 J strobe	• Ex nA IIC T1 Gc X (Ta -40...+50 °C [-40...+122 °F]) • Ex nA IIC T2 Gc X (Ta -40...+40 °C [-40...+104 °F]) • Ex tc IIIC T120 °C Dc (Ta -40...+50 °C [-40...+122 °F]) • Class II, Div 2 FG T4A (Ta -40...+50 °C [-40...+122 °F])

All horns (with and without strobe) comply with the following:

- CAN/CSA C22.2 No. 60079-0:11
- CAN/CSA C22.2 No. 60079-15:12
- CAN/CSA C22.2 No. 60079-31:12

Table 160 - Class/Division Ratings — US and Canada

Device	Rating
Horn	• Class I Div 2, ABCD T3C (Ta -40...+70 °C [-40...+158 °F]) • Class I Div 2, ABCD T4 (Ta -40...+65 °C [-40...+149 °F]) • Class I Div 2, ABCD T4A (Ta -40...+50 °C [-40...+122 °F]) • Class II Div 2, FG T5 (Ta -40...+50 °C [-40...+122 °F]) • Class II Div 2, FG T6 (Ta -40...+45 °C [-40...+113 °F]) • Class III Div 1 & 2 (Ta -40...+50 °C [-40...+122 °F])
Horn with 5 J strobe	• Class I Div 2, ABCD T2B (Ta -40...+70 °C [-40...+158 °F]) • Class I Div 2, ABCD T2C (Ta -40...+55 °C [-40...+131 °F]) • Class I Div 2, ABCD T2D (Ta -40...+40 °C [-40...+104 °F]) • Class II Div 2, FG T5 (Ta -40...+50 °C [-40...+122 °F]) • Class III Div 1&2 (Ta -40...+50 °C [-40...+122 °F])
Horn with 10 J strobe	• Class I Div 2, ABCD T1 (Ta -40...+70 °C [-40...+158 °F]) • Class I Div 2, ABCD T2 (Ta -40...+50 °C [-40...+122 °F]) • Class II Div 2, FG T4A (Ta -40...+50 °C [-40...+122 °F]) • Class II Div 2, FG T5 (Ta -40...+104 °F [-40...+40 °C]) • Class III Div 1&2 (Ta -40...+50 °C [-40...+122 °F])

All horns (with and without strobe) comply with the following:

- ANSI/ISA 12.12.01 – 2013
- CSA C22.2 No. 213-M1987
- CSA C22.2 No. 157-92:2006

Table 161 - Standards and Certifications

Attribute	Bulletin 855XM — Hazardous Location Metal Horns
Standards compliance	• c-UL-us Listed UL464/UL 1608 File No. E305533 • CSA C22.2 No. 213-M1987 • CSA C22.2 No. 157-92: 2006 • CE — European Explosive Atmosphere Directive 94/9/EC and European EMC Directive 2004/108/EC • EN60079-0:2012/IEC60079-0: ed. 6.0 (2011-06) • EN60079-15:2010/IEC60079-15: ed. 4.0 (2010-01) • EN60079-31:2009/IEC60079-31:2009 ed. 1.0 (corr. 1 2009)
Certifications	• CE Marked • UL Listed for: – Class I, Division 2, Groups A, B, C, and D – Class II, Division 2, Groups F and G – Class III, Division 1 and 2 (see Temperature Codes in Table 157 on page 116) • ATEX/IECEx: Zone 2 Groups IIA, B, C and Zone 22 Groups IIIA, B, and C • Ex Rating (Horn): II 3G Ex nA IIC T4 Gc and II 3D Ex tc IIIC T90 °C Dc (Ta -40...+50 °C [-40...+122 °F]) • Ex Rating (Horn with 5 J Strobe): II 3G Ex nA IIC T2 Gc and II 3D Ex tc IIIC T90 °C Dc (Ta -40...+50 °C [-40...+122 °F]) • Ex Rating (Horn with 10 J Strobe): II 3G Ex nA IIC T1 Gc and II 3D Ex tc IIIC T110 °C Dc (Ta -40...+50 °C [-40...+122 °F]); [II 3G Ex nA IIC T2 Gc for Ta -40...+40 °C (-40...+104 °F)]

Tone Selection Table for 855XM

Tone Selection – To select the required first stage tone, set the tone switches 1...6 to the tone setting shown in the following table. The table also shows which 2nd, 3rd, and 4th stage tones are available for use with the selected first stage tone if more that one tone output is required.

Stage 1 Tone No.	Tone Description	Tone Visual	Switch						Stage 2 Alarm (S2)	Stage 3 Alarm (S3)	Stage 4 Alarm (S2+S3)
			1	2	3	4	5	6			
1	1000 Hz PFEER toxic gas	1000 Hz	0	0	0	0	0	0	3	2	44
2	1200/500 @ 1 Hz DIN / PFEER P.T.A.P.	1200 Hz 500 Hz 1 s 1 s	1	0	0	0	0	0	1	3	44
3	1000 @ 0.5 Hz(1 s on/1 s off) PFEER gen. alarm	1000 Hz 1 s 1 s	0	1	0	0	0	0	1	2	44
4	1.4...1.6 kHz 1 s, 1.6...1.4 kHz 0.5 s NF C 48-265	1600 Hz 1400 Hz 1 s 1 s	1	1	0	0	0	0	44	24	1
5	544 (100 ms)/440 (400 ms) NF S 32-001	554 Hz 440 Hz 0.1 s 0.4 s	0	0	1	0	0	0	52	19	1
6	1500/500 - (0.5 s on/0.5 s off) x3 + 1 s gap AS4428	1500 Hz 500 Hz 0.5 s 0.5 s 0.5 s 0.5 s 0.5 s 1.5 s	1	0	1	0	0	0	7	44	1
7	500...1500 Hz sweeping 2 s on/1 s off AS4428	1500 Hz 500 Hz 2 s 1 s	0	1	1	0	0	0	6	44	1
8	500/1200 Hz @ 0.26 Hz(3.3 s on/0.5 s off) Netherlands - NEN 2575	1200 Hz 500 Hz 3.3 s 0.5 s	1	1	1	0	0	0	44	24	35
9	1000 (1 s on/1 s off) x7 + (7 s on/1 s off) IMO Code 1a	1000 Hz 1 s 1 s 1 s 1 s 1 s 1 s 1 s 1 s 1 s 1 s 1 s 1 s 1 s 1 s 7 s 7 s	0	0	0	1	0	0	18	34	1
10			1	0	0	1	0	0	21	34	1
11	420 (0.5 s on/0.5 s off) x3 + 1 s gap ISO 8201 temporal pattern	420 Hz 0.5 s 0.5 s 0.5 s 0.5 s 0.5 s 1.5 s	0	1	0	1	0	0	44	1	8
12	1000 (0.5 s on/0.5 s off) x3 + 1 s gap ISO 8201 temporal pattern	1000 Hz 0.5 s 0.5 s 0.5 s 0.5 s 0.5 s 1.5 s	1	1	0	1	0	0	44	1	8
13	422/775 - (0.85 s on/0.5 s off) x3 + 1 s gap NFPA - temporal	775 Hz 422Hz 0.85 s 0.5 s 0.85 s 0.5 s 0.85 s 1.5 s	0	0	1	1	0	0	44	1	8
14	1000/2000 @ 1 Hz Singapore	2000 Hz 1000 Hz 1 s	1	0	1	1	0	0	23	3	35
15	300 continuous	300 Hz	0	1	1	1	0	0	44	24	35
16	440 continuous	440 Hz	1	1	1	1	0	0	44	24	35
17	470 continuous	470 Hz	0	0	0	0	1	0	44	24	35
18	500 continuous IMO Code 2 (low)	500 Hz	1	0	0	0	1	0	44	24	35
19	554 continuous	554 Hz	0	1	0	0	1	0	64	24	35
20	660 continuous	660 Hz	1	1	0	0	1	0	44	24	35
21	800 IMO Code 2 (high)	800 Hz	0	0	1	0	1	0	44	24	35
22	1200 continuous	1200 Hz	1	0	1	0	1	0	44	24	35
23	2000 continuous	2000 Hz	0	1	1	0	1	0	15	3	35
24	2400 continuous	2400 Hz	1	1	1	0	1	0	48	20	35
25	440 @ 0.83 Hz (50 cycles/min) intermittent	440 Hz 0.6 s 0.6 s	0	0	0	1	1	0	1	44	8
26	470 @ 0.9 Hz - 1.1 s intermittent	470 Hz 0.55 s 0.55 s	1	0	0	1	1	0	1	44	8
27	470 @ 5 Hz - (5 cycles/s) intermittent	470 Hz 0.1 s 0.1 s	0	1	0	1	1	0	1	44	8
28	544 @ 1.14 Hz - 0.875 s intermittent	470 Hz 0.43 s 0.44 s	1	1	0	1	1	0	44	24	8
29	655 @ 0.875 Hz intermittent	655 Hz 0.57 s 0.57 s	0	0	1	1	1	0	1	44	8
30	660 @ 0.28 Hz - 1.8 s on/1.8 s off intermittent	660 Hz 1.8 s 1.8 s	1	0	1	1	1	0	44	24	8
31	660 @ 3.34 Hz - 150 ms on/150 ms off intermittent	660 Hz 0.15 s 0.15 s	0	1	1	1	1	0	30	24	8
32	745 @ 1 Hz intermittent	745 Hz 0.5 s 0.5 s	1	1	1	1	1	0	44	24	8
33	800 - 0.25 s on/1 s off intermittent	800 Hz 0.25 s 1 s	0	0	0	0	0	1	53	24	8

Tone Selection – To select the required first stage tone, set the tone switches 1...6 to the tone setting shown in the following table. The table also shows which 2nd, 3rd, and 4th stage tones are available for use with the selected first stage tone if more that one tone output is required.

Stage 1 Tone No.	Tone Description	Tone Visual	Switch						Stage 2	Stage 3	Stage 3
			1	2	3	4	5	6			
34	800 @ 2 Hz IMO Code 3.a (high) intermittent	800 Hz 0.25 s 0.25 s	1	0	0	0	0	1	56	24	8
35	1000 @ 1 Hz intermittent	1000 Hz 0.5 s 0.5 s	0	1	0	0	0	1	44	24	8
36	2400 @ 1 Hz intermittent	2400 Hz 0.5 s 0.5 s	1	1	0	0	0	1	21	24	8
37	2900 @ 5 Hz intermittent	2900 Hz 0.1 s 0.1 s	0	0	1	0	0	1	53	24	8
38	363/518 @ 1 Hz alternating	518 Hz 363 Hz 0.5 s 0.5 s	1	0	1	0	0	1	1	8	19
39	450/500 @ 2 Hz alternating	500 Hz 450 Hz 0.25 s 0.25 s	0	1	1	0	0	1	1	8	19
40	554/440 @ 1 Hz alternating	554 Hz 440 Hz 0.5 s 0.5 s	1	1	1	0	0	1	44	24	19
41	554/440 @ 0.625 Hz alternating	554 Hz 440 Hz 0.8 s 0.8 s	0	0	0	1	0	1	1	8	19
42	561/760 @ 0.83 Hz (50 cycles/min) alternating	760 Hz 561 Hz 0.6 s 0.6 s	1	0	0	1	0	1	1	8	19
43	780/600 @ 0.96 Hz alternating	780 Hz 600 Hz 0.52 s 0.52 s	0	1	0	1	0	1	1	8	19
44	800/1000 @ 2 Hz alternating	1000 Hz 800 Hz 0.25 s 0.25 s	1	1	0	1	0	1	5	24	19
45	970/800 @ 2 Hz alternating	970 Hz 800 Hz 0.25 s 0.25 s	0	0	1	1	0	1	1	8	19
46	800/1000 @ 0.875 Hz alternating	1000 Hz 800 Hz 0.57 s 0.57 s	1	0	1	1	0	1	53	24	19
47	2400/2900 @ 2 Hz alternating	2900 Hz 2400 Hz 0.25 s 0.25 s	0	1	1	1	0	1	57	24	19
48	500/1200 @ 0.3 Hz sweeping	1200 Hz 500 Hz 3.34 s	1	1	1	1	0	1	44	24	12
49	560/1055 @ 0.18 Hz sweeping	1055 Hz 560 Hz 5.47 s	0	0	0	0	1	1	44	24	12
50	560/1055 @ 3.3 Hz sweeping	1055 Hz 560 Hz 0.3 s	1	0	0	0	1	1	44	24	12
51	600/1250 @ 0.125 Hz sweeping	1250 Hz 600 Hz 8 s	0	1	0	0	1	1	44	24	12
52	660/1200 @ 1 Hz sweeping	1200 Hz 660 Hz 1 s	1	1	0	0	1	1	64	24	12
53	800/1000 @ 1 Hz sweeping	1000 Hz 800 Hz 1 s	0	0	1	0	1	1	56	24	12
54	800/1000 @ 7 Hz sweeping	1000 Hz 800 Hz 0.14 s	1	0	1	0	1	1	57	24	12
55	800/1000 @ 50 Hz sweeping	1000 Hz 800 Hz 0.02 s	0	1	1	0	1	1	54	24	12
56	2400/2900 @ 7 Hz sweeping	2900 Hz 2400 Hz 0.14 s	1	1	1	0	1	1	57	24	12
57	2400/2900 @ 1 Hz sweeping	2900 Hz 2400 Hz 1 s	0	0	0	1	1	1	47	24	12
58	2400/2900 @ 50 Hz sweeping	2900 Hz 2400 Hz 0.02 s	1	0	0	1	1	1	54	24	12
59	2500/3000 @ 2 Hz sweeping	3000 Hz 2500 Hz 0.5 s	0	1	0	1	1	1	44	24	12
60	2500/3000 @ 7.7 Hz sweeping	3000 Hz 2500 Hz 0.13 s	1	1	0	1	1	1	44	24	12
61	800 motor siren	800 Hz 1.6 s	0	0	1	1	1	1	44	24	12
62	1200 motor siren	1200 Hz 2 s	1	0	1	1	1	1	44	24	12
63	2400 motor siren	2400 Hz 1.7 s	0	1	1	1	1	1	44	24	12
64	Simulated bell	1450 Hz 0.25 s 0.69 s	1	1	1	1	1	1	44	21	12

Approximate Dimensions

Dimensions in millimeters (inches). Dimensions are not intended to be used for manufacturing purposes.

855XM Hazardous Location Metal Horn

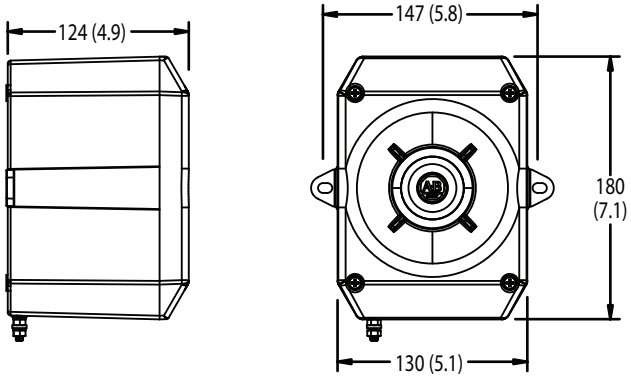

855XM-C Hazardous Location Metal Horn with Xenon Strobe

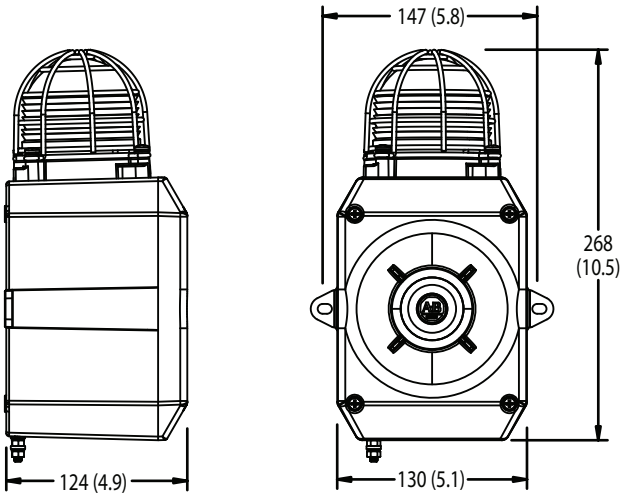

Additional Resources

These documents contain additional information concerning related products from Rockwell Automation.

Resource	Description
855 Metal Horns Selection Guide, publication 855-SG002	Provides product selection for 855XM and 855HM metal horns.
Bulletin 855 Signaling Solutions Brochure, publication 855-BR001	Provides information on the complete portfolio of signaling solutions for optimized monitoring.
Signaling Device Installation Instructions, Literature Library	Provides installation instructions for various signaling devices.
Industrial Automation Wiring and Grounding Guidelines, publication 1770-4.1	Provides general guidelines for installing a Rockwell Automation industrial system.
Product Certifications website, rok.auto/certifications	Provides declarations of conformity, certificates, and other certification details.
EtherNet/IP Network Devices User Manual, ENET-UM006	Describes how to configure and use EtherNet/IP devices to communicate on the EtherNet/IP network.
Ethernet Reference Manual, ENET-RM002	Describes basic Ethernet concepts, infrastructure components, and infrastructure features.
System Security Design Guidelines Reference Manual, SECURE-RM001	Provides guidance on how to conduct security assessments, implement Rockwell Automation products in a secure system, harden the control system, manage user access, and dispose of equipment.
Industrial Components Preventive Maintenance, Enclosures, and Contact Ratings Specifications, publication IC-TD002	Provides a quick reference tool for Allen-Bradley industrial automation controls and assemblies.
Safety Guidelines for the Application, Installation, and Maintenance of Solid-state Control, publication SGI-1.1	Designed to harmonize with NEMA Standards Publication No. ICS 1.1-1987 and provides general guidelines for the application, installation, and maintenance of solid-state control in the form of individual devices or packaged assemblies incorporating solid-state components.
Industrial Automation Wiring and Grounding Guidelines, publication 1770-4.1	Provides general guidelines for installing a Rockwell Automation industrial system.
Product Certifications website, rok.auto/certifications.	Provides declarations of conformity, certificates, and other certification details.

You can view or download publications at rok.auto/literature.

Rockwell Automation Support

Use these resources to access support information.

Technical Support Center	Find help with how-to videos, FAQs, chat, user forums, and product notification updates.	rok.auto/support
Knowledgebase	Access Knowledgebase articles.	rok.auto/knowledgebase
Local Technical Support Phone Numbers	Locate the telephone number for your country.	rok.auto/phonesupport
Literature Library	Find installation instructions, manuals, brochures, and technical data publications.	rok.auto/literature
Product Compatibility and Download Center (PCDC)	Download firmware, associated files (such as AOP, EDS, and DTM), and access product release notes.	rok.auto/pcdc

Documentation Feedback

Your comments help us serve your documentation needs better. If you have any suggestions on how to improve our content, complete the form at rok.auto/docfeedback.

Allen-Bradley, Control Tower, expanding human possibility, On-Machine, and Rockwell Automation are trademarks of Rockwell Automation, Inc.
Trademarks not belonging to Rockwell Automation are property of their respective companies.

Rockwell Automation maintains current product environmental compliance information on its website at rok.auto/pec.

Rockwell Otomasyon Ticaret A.Ş. Kar Plaza İş Merkezi E Blok Kat:6 34752, İçerenköy, İstanbul, Tel: +90 (216) 5698400 EEE Yönetmeliğine Uygundur

Connect with us.

rockwellautomation.com — expanding **human possibility**™

AMERICAS: Rockwell Automation, 1201 South Second Street, Milwaukee, WI 53204-2496 USA, Tel: (1) 414.382.2000, Fax: (1) 414.382.4444
EUROPE/MIDDLE EAST/AFRICA: Rockwell Automation NV, Pegasus Park, De Kleetlaan 12a, 1831 Diegem, Belgium, Tel: (32) 2 663 0600, Fax: (32) 2 663 0640
ASIA PACIFIC: Rockwell Automation, Level 14, Core F, Cyberport 3, 100 Cyberport Road, Hong Kong, Tel: (852) 2887 4788, Fax: (852) 2508 1846

Publication 855-TD001K-EN-P - March 2021
Supersedes Publication 855-TD001J-EN-P - November 2020

Copyright © 2021 Rockwell Automation, Inc. All rights reserved. Printed in the U.S.A.