Technical Data

Allen-Bradley

# Condition Sensing Specifications

Bulletin Numbers 808, 836, 836T, 837, 840


| Topic | Page |
|---|---|
| 836 Pressure Controls | 2 |
| 836T Pressure Controls, Traditional Machine Tool | 21 |
| 837 Mechanical Temperature Controls | 47 |
| 840 Automatic Float Switches | 65 |
| 808 Speed Sensing Switches | 79 |


LISTEN.
THINK.
SOLVE.®

Allen-Bradley • Rockwell Software

Rockwell Automation

Allen Bradley 836-A4A | gesrepair.com

## Summary of Changes

This publication contains new and updated information as indicated in the following table.

| Topic | Page |
|---|---|
| Added product selection, accessories, and modifications to all products | throughout |

## 836 Pressure Controls

- Operating ranges from 30 in. Hg vacuum...900 psi
- Independently adjustable range and differential
- Copper alloy and stainless steel bellows
- 7/16-20 S.A.E. and 1/4 in. N.P.T.F. connections
- Variety of contact blocks available
- Open Type, Type 1, Type 4 & 13, Type 4X, and Type 7 & 9 and 4 & 13 combination enclosures

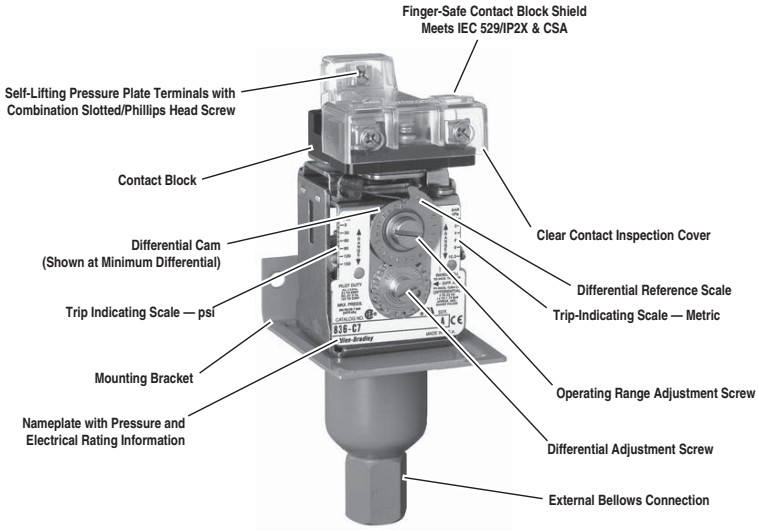


Bulletin 836 Pressure Controls are designed for general industrial use to control and detect pressure. Allen-Bradley Bulletin 836 Pressure Controls can be used in pneumatic and hydraulic systems. Pressure controls use copper alloy or stainless steel bellows. The design and high-quality components provide long life operation with air, water, oil, noncorrosive liquids, vapors, gases, and some corrosive liquids and gases.

Pressure controls feature snap action precision switches equipped with silver contacts. The straight in-line and relatively friction-free construction provides accurate and consistent operation regardless of the angle at which the controls are mounted. Pressure controls are designed for easy adjustment of both trip and reset pressures.

Allen-Bradley Bulletin 836 Pressure Controls are used in many types of industries and applications. They can be used to control pneumatic systems, maintaining preset pressures between two values. Pressure controls can be used to detect overpressures of gases or liquids to help protect machines, processes, and personnel. They can also be used to detect low pressures to help protect equipment from loss of coolants and lubrication.

Bulletin 836 Pressure Controls are offered in various styles to meet a wide range of applications. The devices are available in Type 1, 4 & 13, 4X, 7 & 9 and 4 & 13 combined and open type without enclosure for panel mounting. Pressure controls have a wide variety of contact modifications to meet most control circuit requirements. The controls have adjustable pressure ranges from 30 in. Hg vacuum...900 psi with corresponding differentials. Accessories and modifications are available to tailor the device to meet most application requirements.

## Applications

- Air compressors
- Compressed air monitor systems
- Liquid level control
- Vacuum transfer systems
- High-pressure alert
- Low-pressure alert
- Monitor low and high pressure

## Product Overview

| Type | Description |
|---|---|
| **Style A — Small Size, Internal Copper Alloy Bellows** | |
| | • Independently adjustable range and differential<br>• 7/16-20 SAE flare for 1/4 in. copper tubing connection<br>• Adjustable operating range — 30 in. Hg vacuum…375 psi<br>• Maximum line pressure — up to 750 psi<br>• Occasional surge pressure — up to 850 psi |
| **Style C — Wider Ranges, External Bellows** | |
| | **Style C**<br>• Independently adjustable range and differential<br>• 1/4 in N.P.T.F. internal pipe connection<br>• 3/8 in N.P.S.F. internal pipe connection (836-C1 and 836-C1A only)<br>**Copper Alloy Bellows**<br>• Adjustable operating range — 30 in. Hg vacuum…900 psi<br>• Maximum line pressure — up to 1300 psi<br>• Occasional surge pressure — up to 1600 psi<br>**Type 316 Stainless Steel Bellows**<br>• Adjustable operating range — 30 in. Hg vacuum…375 psi<br>• Maximum line pressure — up to 650 psi<br>• Occasional surge pressure — up to 650 psi |
| **Refrigeration Controls** | |
| | **Style H**<br>• High-pressure refrigeration controls<br>**Style L**<br>• Low-pressure refrigeration controls<br>**Style P**<br>• High-pressure definite purpose controls |

| Standards Compliance |
|---|
| • UL 508<br>• UL 698 (Haz. Loc.)<br>• UL 1604 (Haz. Loc.)<br>• CSA 22.2 No. 14<br>• NEMA ICS-2<br>• IEC 529/IP2X |

| File and Guide Numbers | | | |
|---|---|---|---|
| UL | | CSA | |
| File Number | Guide Number | File Number | Class |
| E14842<br>E53048 (Haz. Loc.)(1) | NKPZ, NOWT | LR1234 ,<br>LR11924 (Haz. Loc.) | 3211-03<br>3218-05 |

**Certifications**

(1) Hazardous Location Enclosure not CE compliant. All other enclosed devices are CE-compliant

## Technical Terms

| Term | Definition |
|---|---|
| Adjustable operating range | Total span within which the contacts can be adjusted to trip and reset. |
| Trip setting | Higher pressure setting at which value the contacts transfer from their normal state to a changed state. |
| Reset setting | Lower pressure setting at which value the contacts return to their normal state. |
| Adjustable differential | Difference between the trip and reset values. |
| Minimum differential | When the differential is set to the lowest pressure difference between trip and reset. |
| Maximum differential | When the differential is set to the widest pressure difference between trip and reset. |
| Maximum occasional surge pressure | Maximum surge pressure that can be applied to the actuator. Surges or transients can occur during startup and shutdown of a machine or system. Expressed in milliseconds, complex electronic instrumentation is required to measure the varying amplitude, frequency, and duration of this wave form. Extreme surges that occur approximately eight times in a 24-hour period are negligible. |
| Maximum line pressure | Maximum sustained pressure that can be applied to the bellows without permanent damage. The control should not be cycled at this pressure. |
| Positive pressure | Any pressure more than 0 psi. See Figure 2 |
| Trip setting | Increasing pressure setting when contacts change state. |
| Reset setting | Decreasing pressure setting when contacts return to their normal state. |
| Vacuum (negative pressure) | Any pressure less than 0 psi, inches of Hg vacuum. See Figure 2 |
| Trip setting | Decreasing vacuum setting when contacts change state. |
| Reset setting | Increasing vacuum setting when contacts return to their normal state. |
| psi | Pounds per square inch. Devices that are listed are in gauge pressure units that use atmospheric pressure as a reference. Atmospheric pressure at sea level is approximately 14.7 psi or 30 in. Hg. |
| Operating range adjustment screw | This screw is used to adjust the trip setting by varying the force of the main spring. |
| Differential adjustment screw | This screw is used to adjust reset setting by varying the force of the differential blade spring. |
| Pressure media | There are many types of pressure media that are controlled. Examples include air, water, hydraulic fluids, and other types of gases and liquids. The type of media and maximum system pressure will determine the type of actuator that is used for the pressure control application. See Pressure Control Selection on page 8. |
| Pressure connection | Common types of pressure connections that are used in control systems are 1/4 in. and 3/8 in. internal pipe threads, and 7/16 in. — 20 SAE copper tubing. |
| Contact configuration | There are many types of contact configurations available. Bulletin 836 Style A and C pressure controls offer a wide variety of contact configurations for both automatic operation and manual reset. See Modifications on page 13 |

**Figure 1 - Technical Terms Illustration**

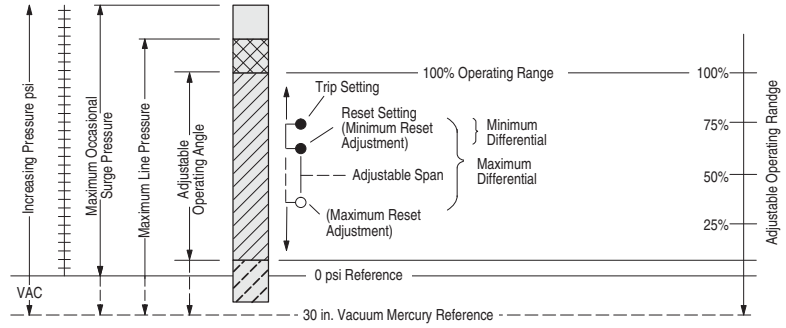


**Figure 2 - Positive Pressure or Vacuum**

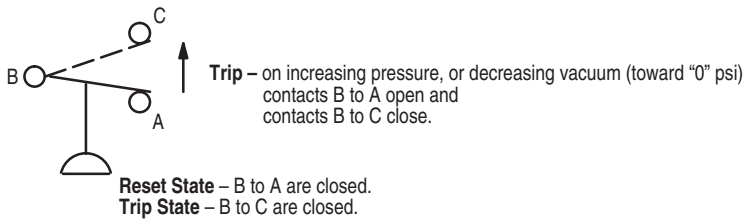

## Operation

Bulletin 836 Pressure Controls are designed to open or close electrical circuits in response to changes in pneumatic (air or gas) or hydraulic (water or oil) pressure. Figure 3 is a simplified drawing of a pressure control.

The system pressure is connected to the control at the pressure connection. The system pressure is applied directly to the bellows. As pressure rises, the bellows exert force on the main spring. When the threshold force of the main spring is overcome, it transfers the motion to the contact block, causing the contacts to actuate — this is referred to as the trip setting. As pressure decreases, the main spring will retract, causing the secondary differential blade spring to activate and return the contacts to their normal state — this is referred to as reset setting.

Varying the force of the main spring (by turning the operating range adjustment screw) determines where the contacts will trip. Varying the force of the secondary differential blade spring (by turning the differential adjustment screw) determines where the contacts will reset.

**Figure 3 - Basic Mechanical Structure**

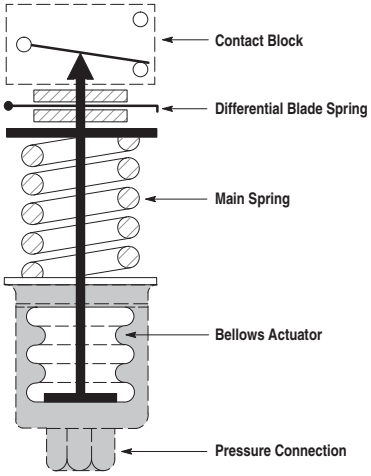


### *Applications for Control*

Pressure controls can be used to either control or monitor a machine or process. Figure 4 shows a typical control application. Here, pressure is controlled within predetermined high and low values. Figure 5 shows a typical monitoring application. Here, pressure is monitored between a high and low value, signaling when a preset limit has been exceeded.

**Figure 4 - Typical Control Application**

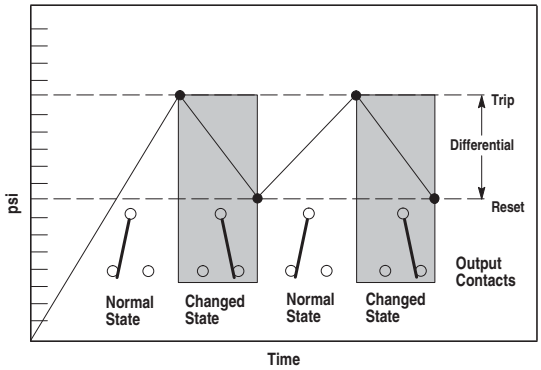


**Figure 5 - Typical Monitoring Application**

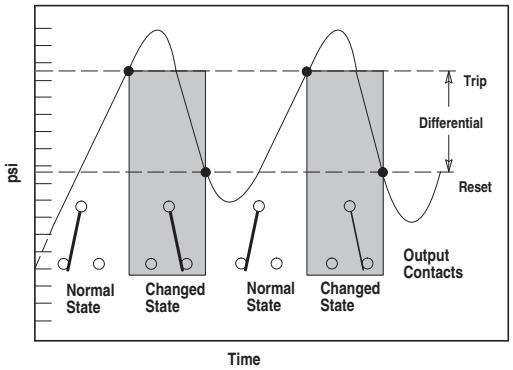

### *Control Settings*

Allen-Bradley controls are designed for ease of setting to help minimize installation time. Standard controls that are shipped from the factory are set at the maximum operating range and minimum differential. By following this simple two-step process, the control can be set to the specific requirements for each application. See Figure 6.

1. Adjust the trip setting.

   The trip setting is achieved by turning the operating range adjustment screw. Turn the range screw counterclockwise to lower the trip setting, or clockwise to raise the trip setting. The approximate trip setting is shown on the indicating scale.

   Turning the operating range adjustment screw will change both the trip and reset settings in equal increments.

2. Adjust the reset setting.

   The reset setting is achieved by turning the differential adjustment screw counterclockwise to increase the differential, or clockwise to decrease the differential.

**IMPORTANT** Adjusting the differential has little or no effect upon the trip setting.

**Figure 6 - Trip and reset adjustment**

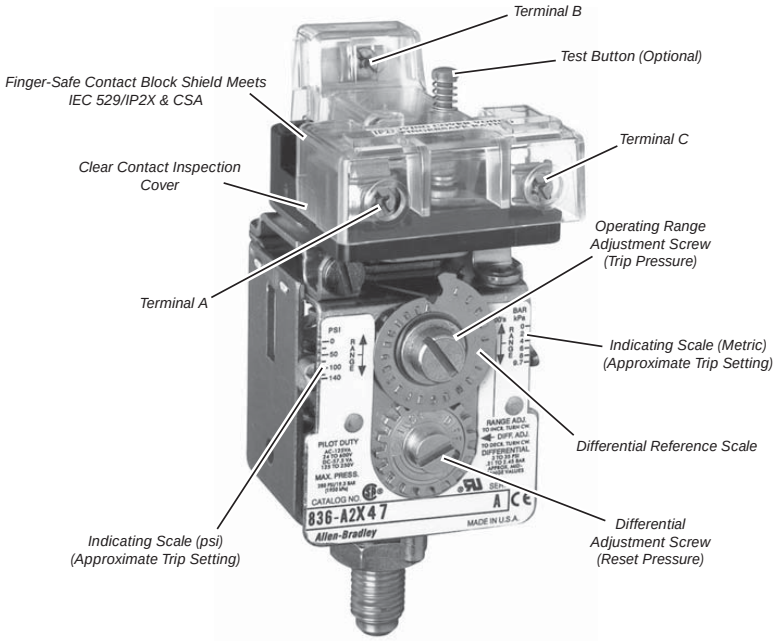


### *Repeat Accuracy and Mechanical Life*

The design and construction of Bulletin 836 Styles A and C controls provide a typical repeat accuracy of + 0.5% or better. Repeat accuracy is based on percent of maximum range, evaluated from test data, and calculated using the formula per ICS 2-225 standards.

Repeat accuracy and mechanical life of bellows type controls is graphically illustrated in Figure 7 on page 7. For general applications, controls selected where the contacts operate between 30...80% of the operating range and where the maximum line and surge pressures do not exceed the specified values will provide excellent life and repeat accuracy. For more specific applications, it is important to note that the controls are designed to operate below or above these values. However, there can be a small trade-off between the factors of repeat accuracy and mechanical life.

**Figure 7 - Repeat accuracy versus mechanical life graph**

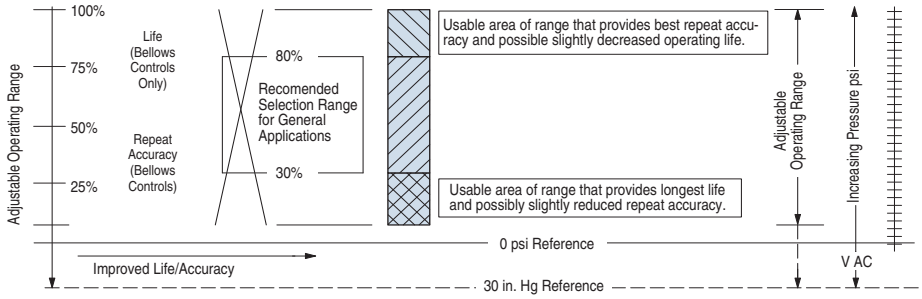


| Standard Contacts | |
|---|---|
| Snap action contact operation | Contact blocks are single-pole, double-throw and can be wired to open or close on increasing or decreasing pressures. |
| Non-inductive ratings | 5 A, 240V |
| | 3 A, 600V |
| Control circuit ratings | AC - 125VA, 24…600V |
| | DC - 57.5VA, 115…230V |

**Figure 8 - Standard Contact Wiring Configurations, Single Pole Double Throw**

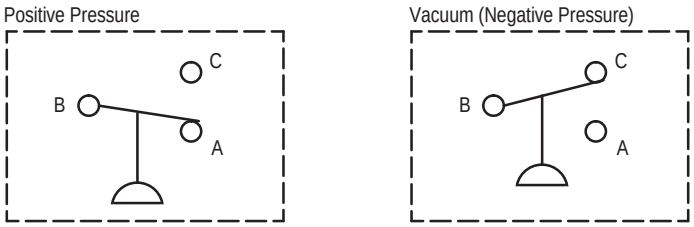


**IMPORTANT** NEMA does not rate contacts to switch low voltage and current.

Bulletin 836 Styles A and C Pressure Controls are supplied with silver contacts. The devices are designed to deliver high-force snap action to the contacts. This provides exceptional contact fidelity at 24V DC I/O card current level entry when the control is protected in a suitable enclosure for the surrounding environment.

### *Special Controls*

- Many unlisted catalog modifications and complete devices are available for specific and OEM applications.
- Special controls and modification service is available to meet many applications unique to the OEM market.
- Please contact your local Rockwell Automation sales office or Allen-Bradley distributor for assistance with specific modified controls and accessories.

### *Temperature Range*

- Temperature range at +32 °F (0 °C) or below is based on the absence of freezing moisture, water, or other fluids that can solidify and impede operation of the control. Temperature ratings are as follows:
  - Operating:–22... +150 °F (–30...+66 °C)
  - Storage:–22...+200 °F (–30...+93 °C)

### *Factory-Set Pressure Controls*

Rockwell Automation will factory set pressure control values to customer-specified values only if a Cat. No. 836-_C device is ordered. Catalog numbers that are ordered without the "C" suffix are set at the maximum operating range and minimum differential. See Ordering Factory-Set Pressure Controls on page 15.

## Pressure Control Selection

The selection table below is an overview of the three types of Allen-Bradley Bulletin 836 Pressure Controls. Each type of control is suitable for use on many types of applications. Pressure ranges, pressure connections, enclosure types, and the compatibility of the actuator with different types of pressure media are given to assist in the selection of which type of control to use.

| **Style** | | **836 Style A** | **836 Style C** | |
|---|---|---|---|---|
| Actuator Type | | Internal Bellows, Copper Alloy | External Bellows, Copper Alloy | External Bellows, Stainless Steel Type 316 |
| Adjustable Operating Ranges | | 30 in. Hg Vacuum…375 psi | 30 in. Hg Vacuum…900 psi | 30 in. Hg Vacuum…375 psi |
| Adjustable Differentials | | 2…95 psi | 0.2…125 psi | 0.4…80 psi |
| Maximum Line Pressures | | up to 750 psi | up to 1300 psi | up to 650 psi |
| Occasional Surge Pressures | | up to 850 psi | up to 1600 psi | up to 650 psi |
| Pressure Media | | | | |
| Air | | • | • | • |
| Water | | • | • | • |
| Hydraulic Fluids | | • | • | • |
| Liquids | Corrosive(1) | | | • |
| | Noncorrosive | • | • | • |
| Gases | Corrosive(2) | | | • |
| | Noncorrosive | • | • | • |
| Enclosures | | | | |
| Open Type | | • | • | • |
| Type 1 | | • | • | • |
| Type 4 & 13 | | • | • | • |
| Type 4X | | | • | • |
| Type 7 & 9 and 4 & 13 | | • | • | • |
| Pipe Connections | | | | |
| Pressure Connection | | 7/16 in.-20 SAE Flare for 1/4 in. Copper Tubing | 1/4 in. N.P.T.F. Internal Pipe Thread or 3/8 in. N.P.S.F. Internal Pipe connection (836-C1 and 836-C1A only) | 1/4 in. N.P.T.F. Internal Pipe Thread |

(1) Corrosive liquids compatible with Type 316 Stainless Steel.
(2) Corrosive gases compatible with Type 316 Stainless Steel.

## Ordering Information

When ordering Bulletin 836 Pressure Controls, consider the following:

- Device style
- Occasional surge pressure
- Adjustable operating range
- Pressure media
- Adjustable differential
- Enclosure type
- Maximum line pressure
- Pressure connection

### How to Order

| 1. Select Basic Device | 2. Modifications | 3. Accessories | 3. Factory Options |
|---|---|---|---|
| Select a catalog number for the basic device. See Product Selection on page 10 | If necessary, add one or more appropriate modification suffix codes to the catalog number of the basic device. See Modifications on page 13 | If necessary, select appropriate accessories. See Accessories on page 14 | Factory-set pressure controls. See Ordering Factory-Set Pressure Controls on page 15 |

## Catalog Number Explanation

| 836 | – | A | 1 | A | X2 | C |
|---|---|---|---|---|---|---|
| | | a | Pressure specifications | b | Modifications<br>Add suffix codes in descending order whenever possible.<br>See Modifications on page 13 | c |

**a**

**Style of Device**

| Code | Description |
|---|---|
| A | Internal bellows |
| C | External bellows |

**b**

**Enclosure Type**

| Code | Description |
|---|---|
| A | Type 1 |
| E | Type 7 & 9 and 4 & 13 Combined Metallic (Aluminum) |
| J | Type 4 & 13 Metallic (Aluminum) |
| S | Type 4X Non-Metallic |
| blank | Without enclosure |

**c**

**Modifications**

| Code | Description |
|---|---|
| blank | Max. range/ min. differential |
| C | Customer specified trip/reset setting(1) |

(1) The requested trip/reset setting must be within the adjustable operating and differential ranges for the pre-configured product, refer to Product Selection.

### Conversion Factors (Rounded)

| psi x (multiplied by factor below)(1) | Equals | psi x (multiplied by factor below) | Equals |
|---|---|---|---|
| 703.1 | mm/$H_2O$ | 0.0689 | bar |
| 27.68 | in. $H_2O$ | 68.95 | mbar |
| 51.71 | mm/Hg | 6895 | Pa |
| 2.036 | in. Hg | 6.895 | kPa |
| 0.0703 | kg/cm$^2$ | | |

(1) psi — pounds per square inch (gauge) $H_2O$ at 39.2°F/Hg at 32 °F

## Product Selection

*Style A Internal Bellows[1]— Copper Alloy[2] Bellows With 7/16 in. — 20 SAE Flare for 1/4 in. Copper Tubing Connection*

**Figure 9 - Style A Internal Bellows —Copper Alloy, Type 1**

**Figure 10 - Style A Internal Bellows —Copper Alloy, Type 4 & 13**

| Pressure Specifications | | | | Enclosure Type | | | |
|---|---|---|---|---|---|---|---|
| Adjustable Operating Range [in. Hg Vacuum…psi][1] | Adjustable Differential [psi] (Approximate Mid-Range Values)[2] | Maximum psi | | Open Type (Without Enclosure) | Type 1 | Type 4 & 13 | Type 7 & 9 and 4 & 13[4] |
| | | Line Pressure | Occasional Surge Pressure[3] | Cat. No. | Cat. No. | Cat. No. | Cat. No. |
| 30 in. Vacuum…75 | 2…20 | 160 | 160 | 836-A1 | 836-A1A | 836-A1J | 836-A1E |
| 6…140 | 3…35 | 280 | 340 | 836-A2 | 836-A2A | 836-A2J | 836-A2E |
| 12…250 | 6…65 | 500 | 600 | 836-A3 | 836-A3A | 836-A3J | 836-A3E |
| 16…375 | 8…95 | 750 | 850 | 836-A4 | 836-A4A | 836-A4J | 836-A4E |

(1) For applications where settings approach 0 psi, select a control that has an adjustable range that goes into vacuum.
(2) To determine differential in inches of mercury vacuum multiply value in table by 2.036 (or approximately 2).
(3) Transients (pulses) can occur in a system prior to reaching a steady-state condition. Surge pressures within published values that are generated during startup or shutdown of a machine or system, not exceeding eight times in a 24-hour period, are negligible.
(4) The combined Type 7 & 9 and 4 & 13 Hazardous Gas and Dust service enclosure is supplied with a special gasket and O-ring seal to diminish/exclude moisture, fluids, and dust from entering the enclosure. Enclosures rated 7 & 9 only are not designed to restrict moisture from entering the enclosure, which is common to outdoor service. Enclosure is rated for the following environments: CLASS I: Groups C and D, CLASS II: Groups E,F, and G, and CLASS III.

(1) Standard pressure controls shipped from the factory are set at the maximum operating range and minimum differential. For more information on standard pressure control settings and customer-specified pressure control settings, consult your local Rockwell Automation sales office or Allen-Bradley distributor.
(2) Copper alloy bellows can be used on water or air, and other liquids or gases not corrosive to this alloy.

*Style C External Bellows —Copper Alloy Bellows With 1/4 in. N.P.T.F. Internal Pipe Connection*

**Figure 11 - Style C External Bellows —Copper Alloy, Type 1 With Pilot Light Option**

**Figure 12 - Style C External Bellows —Copper Alloy, Type 4 & 13**

| Pressure Specifications | | | | Enclosure Type | | | | |
|---|---|---|---|---|---|---|---|---|
| Adjustable Operating Range [in. Hg Vacuum…psi] | Adjustable Differential [psi] (Approximate Mid-Range Values)(2) | Maximum psi | | Open Type (Without Enclosure) | Type 1 | Type 4 & 13 | Type 4X | Type 7 & 9 and 4 & 13(4) |
| | | Line Pressure | Occasional Surge Pressure (3) | Cat. No. | Cat. No. | Cat. No. | Cat. No. | Cat. No. |
| 12 in. Vacuum…8(1) | 0.2…2.5 | 25 | 30 | 836-C1 | 836-C1A | — | — | — |
| 30 in. Vacuum…10 | 0.4…6 | 65 | 75 | 836-C2 | 836-C2A | 836-C2J | 836-C2S | 836-C2E |
| 0.8…30 | 0.5...6 | 80 | 80 | 836-C3 | 836-C3A | 836-C3J | 836-C3S | 836-C3E |
| 30 in. Vacuum…45 | 1…12 | 175 | 190 | 836-C4 | 836-C4A | 836-C4J | 836-C4S | 836-C4E |
| 2…80 | 1…12 | 190 | 210 | 836-C5 | 836-C5A | 836-C5J | 836-C5S | 836-C5E |
| 30 in. Vacuum…100 | 2…25 | 300 | 375 | 836-C6 | 836-C6A | 836-C6J | 836-C6S | 836-C6E |
| 4…150 | 2.5…25 | 300 | 375 | 836-C7 | 836-C7A | 836-C7J | 836-C7S | 836-C7E |
| 6…250 | 4…45 | 500 | 650 | 836-C8 | 836-C8A | 836-C8J | 836-C8S | 836-C8E |
| 35…375 | 6…80 | 900 | 1200 | 836-C9 | 836-C9A | 836-C9J | 836-C9S | 836-C9E |
| 50…500 | 12…115 | 1300 | 1600 | 836-C10 | 836-C10A | 836-C10J | 836-C10S | 836-C10E |
| 50…650 | 16…115 | 1300 | 1600 | 836-C11 | 836-C11A | 836-C11J | 836-C11S | 836-C11E |
| 200…900 | 25…115 | 1300 | 1600 | 836-C12 | 836-C12A | 836-C12J | 836-C12S | 836-C12E |

(1) For applications where settings approach 0 psi, select a control that has an adjustable range that goes into vacuum.
(2) To determine differential in inches of mercury vacuum multiply value in table by 2.036 (or approximately 2).
(3) Transients (pulses) can occur in a system prior to reaching a steady-state condition. Surge pressures within published values that are generated during startup or shutdown of a machine or system, not exceeding eight times in a 24-hour period, are negligible.
(4) The combined Type 7 & 9 and 4 & 13 Hazardous Gas and Dust service enclosure is supplied with special gasket and O-ring seal to diminish/exclude moisture, fluids, and dust from entering the enclosure. Enclosures rated 7 & 9 only are not designed to restrict moisture from entering the enclosure, which is common to outdoor service. Enclosure is rated for the following environments: CLASS I: Groups C and D, CLASS II: Groups E,F, and G, and CLASS III

## *Style C External Bellows —Type 316 Stainless Steel Bellows[1] With 1/4 in. N.P.T.F. Internal Pipe Connection*

Standard pressure controls shipped from the factory are set at the maximum operating range and minimum differential. For more information on standard pressure control settings and customer-specified pressure control settings, consult your local Rockwell Automation sales office or Allen-Bradley distributor.

**Figure 13 - Style C External Bellows —Type 4X Glass Reinforced Polyester Enclosure**

**Figure 14 - Style C External Bellows —Stainless Steel, Type 7 & 9 and 4 & 13 Combined**

| Pressure Specifications | | | | Enclosure Type | | | | |
|---|---|---|---|---|---|---|---|---|
| Adjustable Operating Range [in. Hg Vacuum…psi] [1] | Adjustable Differential [psi] (Approximate Mid-Range Values) | Maximum psi | | Open Type (Without Enclosure) | Type 1 | Type 4 & 13 | Type 4X | Type 7 & 9 and 4 & 13[2] |
| | | Line Pressure | Occasional Surge Pressure§ | Cat. No. | Cat. No. | Cat. No. | Cat. No. | Cat. No. |
| 30 in. Vacuum…10 | 0.4…6 | 65 | 65 | 836-C60 | 836-C60A | 836-C60J | 836-C60S | 836-C60E |
| 0.8…30 | 0.4…6 | 65 | 65 | 836-C61 | 836-C61A | 836-C61J | 836-C61S | 836-C61E |
| 30 in. Vacuum…100 | 2…25 | 270 | 270 | 836-C62 | 836-C62A | 836-C62J | 836-C62S | 836-C62E |
| 4…150 | 2.5…25 | 270 | 270 | 836-C63 | 836-C63A | 836-C63J | 836-C63S | 836-C63E |
| 6…250 | 4…45 | 450 | 450 | 836-C64 | 836-C64A | 836-C64J | 836-C64S | 836-C64E |
| 35…375 | 8…80 | 650 | 650 | 836-C65 | 836-C65A | 836-C65J | 836-C65S | 836-C65E |

(1) For applications where settings approach 0 psi, select a control that has an adjustable range that goes into vacuum.
(2) The combined Type 7 & 9 and 4 & 13 Hazardous Gas and Dust service enclosure is supplied with special gasket and O-ring seal to diminish/exclude moisture, fluids, and dust from entering the enclosure. Enclosures rated 7 & 9 only are not designed to restrict moisture from entering the enclosure, which is common to outdoor service. Enclosure is rated for the following environments: CLASS I: Groups C and D, CLASS II: Groups E,F, and G, and CLASS III

(1) Type 316 stainless steel bellows are available fore more corrosive liquids or gases.

## Modifications

Modifications are ordered by adding the appropriate modification suffix code to the catalog number of the basic device. Add suffix codes to the catalog number in descending order (highest number first).

| Description | | | Suffix Code |
|---|---|---|---|
| **Contact Blocks** | | | |
| **Standard Contact Blocks, Automatic Operation** | | | |
| Single pole, double throw, snap action [1][2] | Supplied when a contact block suffix is not added to the catalog number. Control Circuit Rating: See Specifications on Standard Contacts | | — |
| Single pole, double throw, slow-acting contact with no snap action[1][2] | Contacts close on rise and close on fall with an open circuit between contact closures. Control Circuit Rating: AC-125VA, 24…250V | | X171 |
| Single pole, single throw, normally open, closes on rise[1][2] | 0.5 Hp, 115V AC1 HP, 230V AC Control Circuit Rating: AC-125 VA, 24…110V AC-345 VA, 110…600V DC-57.5 VA, 110…250V | | X221 |
| Single pole, single throw, normally closed, opens on rise[1][2] | | | X231 |
| Single pole, single throw, normally open, closes on rise[1][2] | 1 Hp, 115V AC 1.5 Hp, 230V AC Control Circuit Rating: AC-600 VA, 110…600V DC-57.5 VA, 110…250V | | X321 |
| Single pole, single throw, normally closed, opens on rise[1][2] | | | X331 |
| **External Manual Reset**<br>**Non-inductive: 5 A, 240V 3 A, 600V Control Circuit Rating: AC-125 VA, 24…600V DC-57.5 VA, 115…230V (Not available in Type 4X Enclosures)[1][3]** | | | |
| **Single-pole single-throw, normally open —** contacts open at a predetermined setting on fall and remain open until system is restored to normal run conditions, at which time contacts can be manually reset. | | | X140 |
| **Single pole single throw, normally closed —** contacts open on rise and remain open until system is restored to normal run conditions, at which time contacts can be manually reset. | | | X150 |
| **Single pole double throw, one contact normally closed —** contact opens on rise and remains open until system is restored to normal run conditions, at which time contact can be manually reset. A second contact closes when the first contact opens. | | | X15A |
| **Other Modifications** | | | |
| **Oxygen/Nitrous Oxide Service -** Bellows and fittings are specially prepared for oxygen and nitrous oxide service. The devices are tested with pure oxygen, bellows are plugged for protection from contamination, and a tag warning against contamination is applied. | | | X2 |
| **Tamper-Resistant Adjustment -** Range and differential adjustment screws are designed so that after a setting has been applied to the control, the adjustment screws can be broken off with pliers. Note: The "break-off" adjustment screws will not be broken off unless a factory setting is given and the order specifies "Break-off Adjustment Screws". See Ordering Factory-Set Pressure Controls on page 15 | | | X4 |
| **Pilot Lights[4]** | | | |
| **LED Pilot Light, 120V AC** | Contact modified industrial controls team to select LED color and to configure catalog number. | | — |
| **Red LED Pilot Light, 24V DC** - A high intensity LED 24V DC pilot light is available to meet the requirements of the automotive, machine tool builders and other industries. The current rating is 22 mA and can be wired for ON or OFF operation. | | | X15 |
| **Green LED Pilot Light, 24V DC -** A high intensity LED 24V DC pilot light is available to meet the requirements of the automotive, machine tool builders and other industries. The current rating is 22 mA and can be wired for ON or OFF operation. | | | X18 |

(1) Contact blocks are not available for field conversion or replacement. Trip pressure-indicating scales are supplied on controls with standard contact block.
(2) Minimum specified differential value approximately doubles.
(3) Manual reset devices cannot be supplied with an adjustable differential. Inherent differential is approximately three times the differential of the corresponding adjustable differential control. Available only for replacement of complete open type control in an existing Type 1 or 4 & 13 enclosure. Replacement in a Type 7 & 9 enclosure is not available because it would void UL and CSA. Type 7 & 9 enclosures for manual reset devices are not also rated Type 4 & 13.
(4) Not available on combined Type 7 & 9 and 4 & 13, Type 4X, and manual reset devices.

**IMPORTANT** NEMA does not rate contacts to switch low voltage and current. Bulletin 836 Styles A and C Pressure Controls are supplied with silver contacts. The devices are designed to deliver high-force, snap-action to the contacts. This provides exceptional contact fidelity at 24V DC I/O card current level entry when the control is protected in a suitable enclosure for the surrounding environment.

## Accessories

Accessories are ordered as separate catalog numbers. Select the required accessories from the following tables.

| Description | | | Cat. No. |
|---|---|---|---|
| Pipe Adapter | 1/4 in. male pipe adapter with copper seating washer for Style A only. | | 836-N1 |
| Contact Block Replacement Kit | Kit consists of a standard contact block and instructions. | | 836-N2 |
| Fingersafe Contact Block Cover | Clear contact block cover provides IP2X fingersafe protection. | | 41162-908-01 |
| Hardware Kits for Mounting Open Type Controls in Special Enclosures | Hardware kits for mounting open type controls in special enclosures allow ease of connecting pressure lines to the enclosure. For use with Type 1 and Type 4 & 13 enclosures with wall thickness up to 0.25 in. (6.35 mm). | Style A Controls, Open type controls, Plated steel | 836-N5 |
| | | Style C Controls, Open type controls, Brass | 836-N8 |
| | | Style C Controls, Stainless steel | 836-N10 |
| Angle Mounting Brackets | For mounting one or two open type Bulletin 836 Style A Pressure Controls or Bulletin 837 Temperature Controls on an enclosure mounting plate. | Single bracket | 836-N11 |
| | | Dual mounting bracket | 836-N12 |
| Isolation Traps, Steam and/or Corrosive Media Applications | An isolation trap is available for high-temperature media applications from 150. . .600 °F or corrosive applications compatible with Type 316 stainless steel tubing and fittings. The isolation coil is inserted between the bellows of the pressure control and the elevated temperature line of the system. The isolation trap will fill with condensed water or can be filled with water or suitable fluid when installed. A silicone buffer fluid is available in a convenient dispenser. Copper alloy lower and higher pressure range bellows can be applied to many applications using the isolation trap. The silicone buffer fluid is used to isolate many corrosive substances from coming in contact with the bellows. The isolation trap is rated at 3000 psi working pressure. Not available for piston-type controls | Isolation trap with two 1/4 in. male pipe fittings | 836-N25 |
| | | Isolation trap with one 1/4 in. male and one 1/4 in. female pipe fitting | 836-N26 |
| | | 2 oz. of buffer fluid to fill bellows and tubing | 836-N27 |
| External Fixed Pulsation Snubbers | Controls are supplied as standard with an internal pulsation snubber. However, a control that is properly selected and used within the adjustable range values yet having a short bellows life is a good indication of the presence of extreme surge pressures. External fixed pulsation snubbers are available to provide additional dampening when extreme pulsations or surges are present. Recommended if more than eight line surges occur in a 24-hr. time period. | Style A Controls | 836-N6 |
| | | Style C Controls | 836-N7 |
| Selectable Element Pulsation Snubbers | Controls are supplied as standard with an internal pulsation snubber. However, a control that is properly selected and used within the adjustable range values, yet having a short bellows life, is a good indication of the presence of extreme surge pressures. Selectable element pulsation snubbers are supplied with five different elements to provide a selectable balance between maximizing pressure control life and minimizing control response time. Pulsation snubbers are supplied with the mid-range element already mounted and four other color-coded porosity elements included in the package. | Style C Controls | 836-N40 |

**Figure 16 - Isolation Trap and Silicone Buffer Fluid**

**Figure 15 - Selectable Pulsation Snubber Porosity Elements**

| Description | Recommended Type of Service[1] | Color Code | Porosity |
|---|---|---|---|
| Elements are color-coded on the ends for easy identification. Elements are available in five different porosities for a wide range of applications. | Viscous fluids (over 500 SSU) | None | Coarser |
| | Medium type oils (225…500 SSU) | Black | ↕ |
| | Water and light oils (30… 225 SSU) | Brown | ↕ |
| | Low viscosity fluids (under 30 SSU) | Green | ↕ |
| | Air and other gases | Red | Finer |
| | One of each of the above | — | Assorted |

(1) SSU= Saybolt Seconds Universal — units of viscosity measurement.

Fixed Pulsation Snubbers Male/Female Pipe Threads

Selectable Element Pulsation Snubbers Male/Female Threads

Porosity Elements

## Ordering Factory-Set Pressure Controls

This section describes the factory-set pressure controls options.

### *Standard Product Offering*

Standard pressure controls shipped from the factory are set at the maximum operating range and minimum differential. These settings vary for each pressure switch family depending on the combination of Style, Operator Type, and Pressure Specification configuration options. These pressure switches do not require a custom trip / reset setting characteristic. Customers still have the ability to set the operating range and differential in the field as long as they are within the limitation of switch.

### *Custom Product Offering (Customer-Specified Settings)*

Pressure controls shipped from the factory can be set to customer-requested values as long as they are within the limitation of the switch. See Product Selection, and reference Adjustable Operating Range and Adjustable Differential values in the tables. These trip and reset ranges vary depending on the Style, Operator Type, and Pressure Specification configuration. These switches require a custom trip/reset setting characteristic. To request a pressure switch with customer specified trip and/or reset settings, order a pressure control catalog number ending with the "C" Custom Trip Reset Setting characteristic and include one of the following factory-set pressure control statements when the order is placed (within the Customer Review Request Notes field):

**EXAMPLE**

Normally Closed (N.C.) contacts to open at * psi increasing pressure and close at * psi decreasing pressure.
—OR—
Normally Open (N.O.) contacts to close at * psi increasing pressure and open at * psi decreasing pressure.

*If minimum differential is not critical and the inherent minimum differential satisfies the application, specify the factory setting as follows:*

Normally Closed (N.C.) contacts to open at * psi increasing pressure. Minimum differential.
—OR—
Normally Open (N.O.) contacts to close at * psi increasing pressure. Minimum differential.

* Specify psi (pounds per square inch) or, in. Hg vacuum (inches of mercury vacuum)

When a specific factory setting is requested, the specific terminal connections must be specified — for example, N.O. or N.C. It must also be specified whether the contact operation is occurring on either increasing or decreasing pressure.

If not specified, settings tolerances will be as shown in table.

**Setting Tolerances**

| Pressure Range | Tolerance |
|---|---|
| 30 in. Hg Vac. . . . 0 psi | +/- 1 in. Hg Vac. |
| > 0 . . . 100 psi | +/- 1 psi |
| > 100 . . . 300 psi | +/- 2 psi |
| > 300 . . . 500 psi | +/- 5 psi |
| > 500 . . . 1000 psi | +/- 10 psi |
| > 1000 . . . 5000 psi | +/- 50 psi |

Quality analog Test(1) gauges are used when applying requested factory settings to these rugged industrial-grade pressure controls. (Gauges are calibrated and the accuracy is traceable to National Bureau of Standards.)

The actual requested setting is applied to the control by reading the setpoint directly from the test gauge being used. However, traceable gauge tolerance variance between source and user, and possible severe shock during shipping and installation, can contribute to the factory settings deviating slightly from the specified values. Slight recalibration can easily be accomplished upon final installation to meet specific requirements for the more demanding applications. When installed, the controls will perform with a repeat accuracy as established in the paragraph on Repeat Accuracy and Mechanical Life entitled “Repeat Accuracy and Mechanical Life”.

Special service is available to factory set controls on Digital Laboratory Instruments, up to 600 psi, when required for the more critical applications. An additional charge can be added for this service contingent upon setting tolerance and quantity.

Two Style A Controls In One Enclosure Bulletin 836 Style pressure controls which function independently can be mounted side by side in one Type 1 enclosure. This design is ideal for installations where two controls would ordinarily be mounted. Each dual unit can be a combination of a Style A pressure control and a bulb and capillary type temperature control. See respective product tables.

To order this arrangement, specify the two desired catalog numbers in their mounted position within the dual enclosure to form one catalog number. The list price is the sum of the two Type 1 enclosed devices.

**IMPORTANT** For more information on special controls, contact your local Rockwell Automation sales office or Allen-Bradley distributor.

## Refrigeration Controls

Bulletin 836 Refrigeration Controls are similar to Bulletin 836 Style A Pressure Controls. However, refrigeration controls are constructed with additional pulsation dampening to filter out the severe pulsations generated by reciprocating refrigeration compressors. Pressure controls not supplied with the added snubber function can result in reduced bellows life. The reduced life results from pulsations severe enough to cause the bellows to "squeal" at the pump frequency or at the harmonic wave that is generated at specific pump loading demands. Refrigeration controls are supplied as standard with the pulsation snubber built into the stem of the bellows.

Allen-Bradley heavy-duty refrigeration controls have copper alloy bellows(2) for use with noncorrosive refrigerants. The devices can be supplied as single Open Type devices or mounted in a Type 1 enclosure. Standard controls have 7/16 in. – 20 SAE male threads for a 45° flare fuel and lubricant fitting. Optionally, the refrigeration controls can be supplied with capillary tubing. The capillary terminates with 1/4 in. tubing, which is flared and supplied with a 7/16 in. – 20 female nut. To modify the standard pressure connection, add suffix “-36” (denotes 36 in.) to the catalog number. There is no price addition for changing to a capillary-type pressure connection. Example: Cat. No. 836-H11-XHC, modified for a 36 in. capillary connection, is Cat. No. 836-H11-XHC-36.

(1) Per ANSI B40.1 Grade 2 A (0.5% accuracy full scale), Grade 3 A (0.25% accuracy full scale).
(2) Copper alloy bellows can be used on water or air, and other liquids not corrosive to this alloy.

## Product Overview

| Photo | Description |
|---|---|
| **Style H — High-Pressure Refrigeration Controls** | |
| | • Copper alloy bellows with built-in pulsation snubber<br>• 7/16 in. — 20 SAE male thread for 45° flare fitting<br>• Adjustable operating range — 30...120 psi<br>• Maximum line pressure — 450 psi<br>• Occasional surge pressure — 800 psi<br>• With capillary and flare connection |
| **Style L — Low-Pressure Refrigeration Controls** | |
| | • Copper alloy bellows with built-in pulsation snubber<br>• With capillary and tubing connection<br>• Adjustable operating range — 20 in. Hg vacuum...120 psi<br>• Maximum line pressure — 220 psi |
| **Style P — High-Pressure Definite-Purpose Refrigeration Controls** | |
| | • Copper alloy bellows with built-in pulsation snubber<br>• 7/16 in. — 20 SAE male thread for 45° flare fitting<br>• Operating range — 30...700 psi<br>• Line and occasional surge pressure — 800 psi<br>• Fixed differential — 30 psi |

## Product Selection

**Style H — High-Pressure Refrigeration Controls**

| Pressure Specifications | | | | Enclosure Type | | Contact Reference Number (See Contact Reference Number Table on page 18) |
|---|---|---|---|---|---|---|
| Adjustable Operating Range [psi] | Adjustable Differential [psi] (Approximate Mid-Range Values) | Maximum Line Pressure [psi] | Limited Maximum Stop [psi] | Open Type Without Enclosure<br>Cat. No. | Type 1<br>Cat. No. | |
| 30…270 | 30…80 | 600 | — | 836-H11-XHCS | 836-H11-XHC | 1 |
| 50…450 | 40…100 | 800 | — | 836-H11-BLCS | 836-H11-BLC | 1 |
| 100…285 | 40…90 | 600 | 285 | 836-H33-XKKS | 836-H33-XKK | 3 |
| 200…425 | 40…90 | 800 | 425 | 836-H33-BLKS | 836-H33-BLK | 3 |
| 125…280 | 60…120 | 800 | 280 | 836-H33-BKKS | 836-H33-BKK | 3 |
| **Customer Specified, Factory Locked Operating Range With Fixed Differential of 30 psi** | | | | | | |
| 75…350 | 35 | 800 | — | 836-H33-XNAS | 836-H33-XNA | 3 |

**Style L — Low-Pressure Refrigeration Controls - Copper Alloy Bellows**

| Pressure Specifications | | | Enclosure Type | | Contact Reference Number (See Contact Reference Number Table) |
|---|---|---|---|---|---|
| Adjustable Operating Range [in. Hg Vacuum…psi] | Adjustable Differential [psi] (Approximate Mid-Range Values)(1) | Maximum Line Pressure [psi] | Open Type (Without Enclosure) | Type 1 | |
| | | | Cat. No. | Cat. No. | |
| 20 in. Hg Vacuum…120 psi | 5…30 | 220 | 836-AL11-NKCS | 836-AL11-NKC | 1 |
| 20 in. Hg Vacuum…120 psi | 9…50 | 220 | 836-AL32-NKCHS | 836-AL32-NKCH | 2 |

(1) To determine differential in in. Hg vacuum, multiply the value in the table by 2.036 (or approximately 2).

**Style P High-Pressure Definite Purpose—Copper Alloy Bellows**

| Pressure Specifications | | | | Enclosure Type | | Contact Reference Number (See Contact Reference Number Table) |
|---|---|---|---|---|---|---|
| Adjustable Operating Range [psi] | Fixed Differential [psi] | Maximum Line Pressure [psi] | Limited Maximum Stop [psi] | Open Type (Without Enclosure) | Type 1 | |
| | | | | Cat. No. | Cat. No. | |
| 30…700 | 30 | 800 | — | 836-P11-ARBS | 836-P11-ARB | 1 |

### Contact Reference Number Table

| Reference Number | Description | Symbol | Rating |
|---|---|---|---|
| 1 | Single pole double throw — automatically opens or closes on rise or fall | | Non-inductive: 5 A, 240V … 3 A, 600V Control Circuit Rating: AC-125VA, 24…600V DC-57.5VA, 115…230V |
| 2 | Single pole single throw, normally open — closes on rise | | 1 Hp, 115V AC 1.5 Hp, 230V AC Control Circuit Rating: AC-600VA, 110…600V DC-57.5VA, 110…250V |
| 3 | Single pole single throw, normally closed — opens on rise | | |

## Factory Options for Refrigeration Controls

It is common in the industry to supply a low-pressure Style L and a high-pressure Style H mounted in a common, dual Type 1 enclosure. This factory option can be supplied with the low-pressure control on the left and the high-pressure control on the right. To order, combine the two desired Type 1 catalog numbers into one number.

**EXAMPLE** Low-pressure control 836-AL11-NKC-36, plus high-pressure control 836-H11-BLC-36, becomes an 836-AL11-NKC-36/836-H11-BLC-36.

Two Style A Pressure Controls in One Type 1 Enclosure

## Approximate Dimensions and Shipping Weights

Dimensions in inches (millimeters). Dimensions are not intended to be used for manufacturing purposes.

*Style A*

**Figure 17 - Open Type**

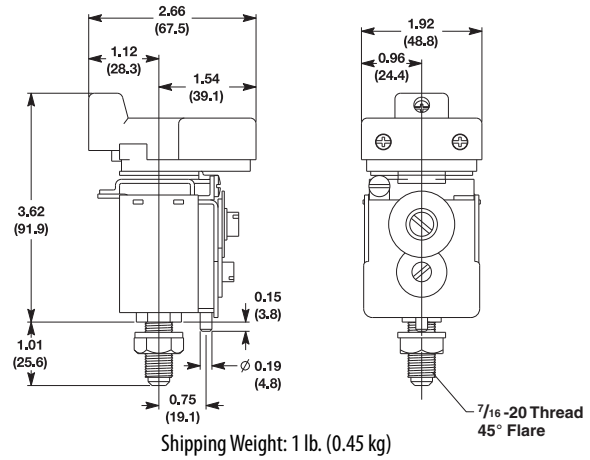


Shipping Weight: 1 lb. (0.45 kg)

**Figure 18 - Type 1**

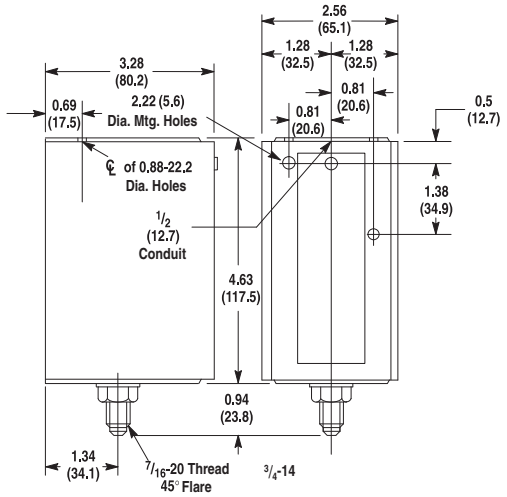


Shipping Weight: 2 lbs (0.91 kg)

**Figure 19 - Type 4 & 13**

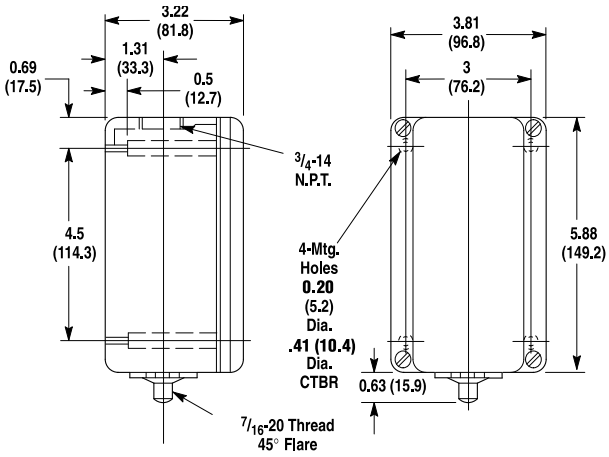


Shipping Weight: 3 lbs (1.4 kg)

**Figure 20 - Type 7 & 9 and 4 & 13**

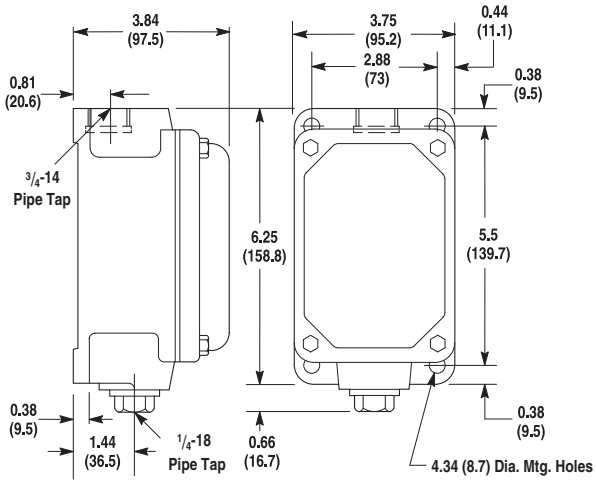


Shipping Weight: 9 lbs (4.1 kg)

**Figure 21 - Cat. No. 836-N1**

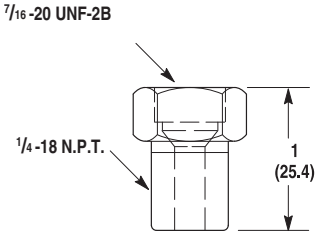


Shipping Weight: 1/4 lb (0.1 kg)

**Figure 22 - Cat. No. 836-N40**

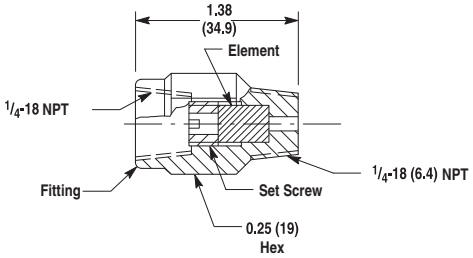


Shipping Weight: 1/4 lb (0.1 kg)

*Style C*

**Figure 23 - Cat. No. 836-C**

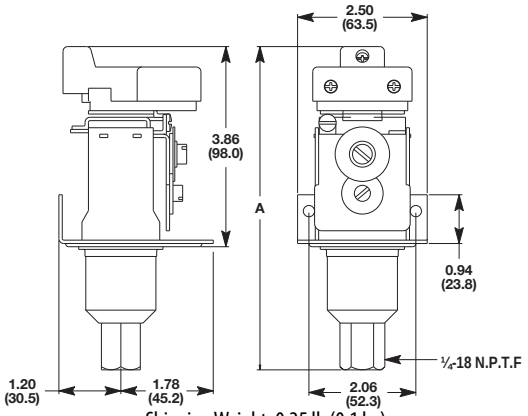


Shipping Weight: 0.25 lb (0.1 kg)

| Cat. No. | Dimension A in. (mm) |
|---|---|
| C2, C3, C60, C61 | 6.11 (155) |
| C4 | 5.99 (152) |
| C5, C64 | 5.94 (151) |
| C6, C62 | 6.29 (160) |
| C7, C63 | 6.24 (158) |
| C8, C9 | 5.56 (141) |
| C10, C11, C12, C65 | 5.78 (147) |

Catalog Numbers 836-C1 and 836-C1A: Require a 2 in. swing radius from centerline of pressure connection. Mount control on 7/8 in. minimum spacers, 3/8-18 N.P.S.F. internal pipe connection.

**Figure 24 - Type 1**

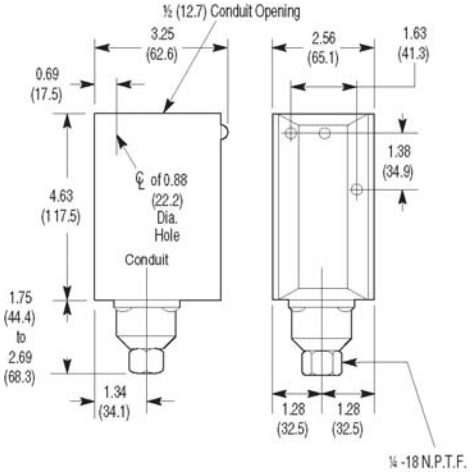


Shipping Weight: 2.0lb (0.9 kg)

**Figure 25 - Type 7 & 9 and 4 and13**

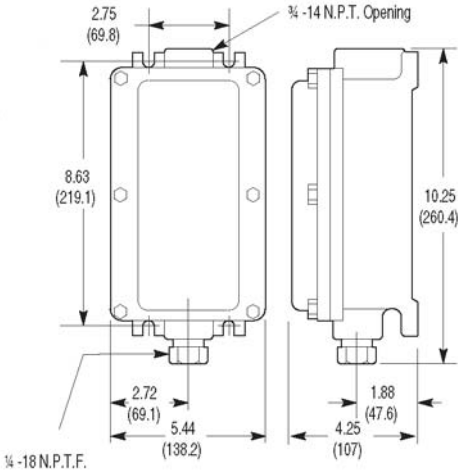


Shipping Weight: 10 lb (4.5 kg)

**Figure 26 - Type 4 & 13**

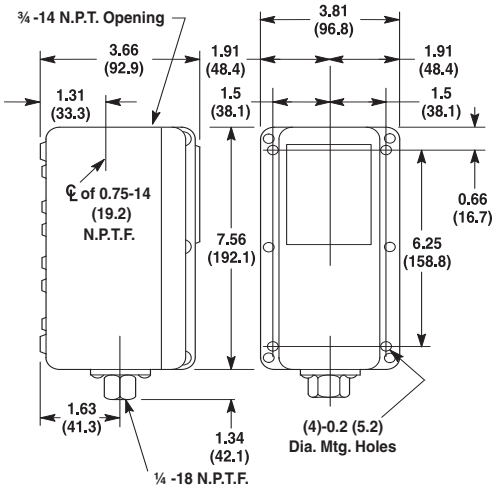


Shipping Weight: 5 lb (2.3 kg)

**Figure 27 - Type 4X**

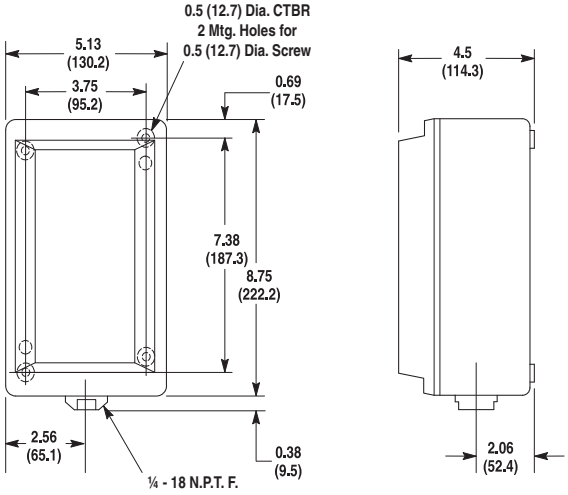


Shipping Weight: 6 lb (2.7 kg)

## 836T Pressure Controls, Traditional Machine Tool

- Operating ranges from 30 in. Hg vacuum...5000 psi
- Independently adjustable range and differential
- Copper alloy and stainless steel bellows
- 2 and 4-Circuit contact block
- Pressure difference controls available
- 1/4 in. and 3/8 in. N.P.T.F. and O-ring straight thread connections
- Type 4 & 13 and Type 7 & 9 and 4 & 13 combination enclosures

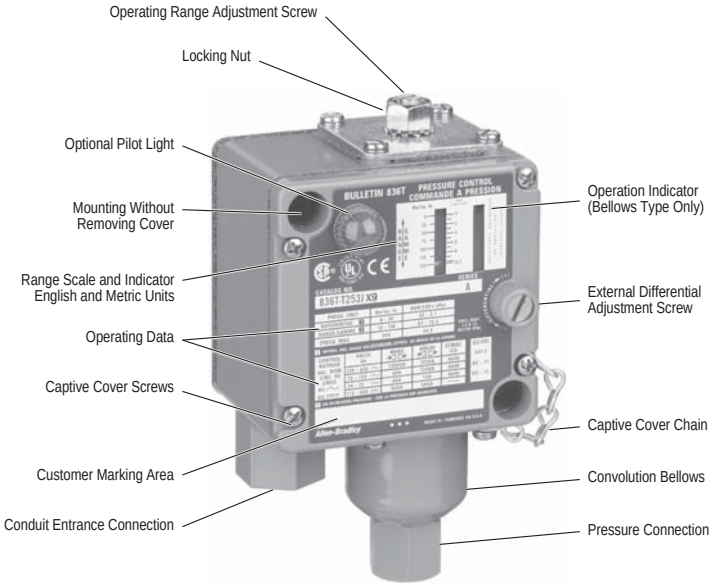


Bulletin 836T Pressure Controls are control circuit devices designed to meet the traditional requirements of the transportation, machine tool, and other heavy-duty industries. Allen-Bradley Bulletin 836T Pressure Controls can be used in pneumatic and hydraulic applications. The copper alloy bellows actuators can be used with air, water, oil, vapor, and other non-corrosive gases and liquids. Type 316 stainless steel bellows are available for more corrosive gases, vapors, and fluids.

A rugged stainless steel cylinder and stainless steel piston assembly is used for the higher-pressure coolant and hydraulic oil applications. can also be used with water and water-based fluids. The controls feature snap-action precision switches equipped with silver contacts. A relatively friction-free mechanism provides consistent operation regardless of mounting position. Devices are designed to allow easy adjustment of pressure settings.

Allen-Bradley Bulletin 836T Pressure Controls are used in many types of applications with adjustable ranges from 30 in. Hg vacuum...5000 psi. They can be used to control pneumatic systems and maintain a pressure tank within a preset and constant pressure range. They can be used to detect over-pressures of gases and liquids to prevent damage to valuable equipment. Pressure controls can also detect low pressure to protect equipment from loss of coolants and lubrication.

Bulletin 836T Pressure Controls are offered in a variety of styles to fit a wide range of applications. The devices are available with either a Type 1, 4 & 13, or 7 & 9 and 4 & 13 combined enclosure. They are available with two-circuit or four-circuit contact blocks. Accessories and modifications are available to tailor the devices to meet most application requirements.

### Applications

- Machine tools
- Machine hydraulic pressures
- Material clamping fixtures
- Lubricant and coolant pressures
- Compactor ram pressures
- Air compressors

## Product Overview

| Photo | Description |
|---|---|
| **Style T— Pressure Control** | |
| | **Style T**<br>• Independently adjustable operating range and differential<br>• Single bellows or piston operation<br>**Copper Alloy Bellows**<br>• 1/4 in. N.P.T.F. female pipe connection<br>• Adjustable operating range — 30 in. Hg vacuum…650 psi<br>• Maximum line pressure — up to 1300 psi<br>• Occasional surge pressure — up to 1600 psi<br>**Type 316 Stainless Steel Bellows**<br>• 1/4 in. N.P.T.F. female pipe connection<br>• Adjustable operating range — 30 in. Hg vacuum…375 psi<br>• Maximum line pressure — up to 600 psi<br>• Occasional surge pressure — up to 600 psi<br>**Piston**<br>• 3/8 in. N.P.T.F. female pipe connection<br>• SAE 7/16-20 UNF-2B thread O-ring boss seal<br>• SAE 9/16-18 UNF-2B thread O-ring boss seal<br>• Adjustable operating range — 40…5000 psi<br>• Occasional surge pressure — up to 15,000 psi |
| **Style D — Pressure Difference Control** | |
| | **Style D**<br>• Independently adjustable system difference range and differential<br>• Two-bellows operation, one bellows connected to each system<br>**Copper Alloy Bellows**<br>• 1/4 in. N.P.T.F. female pipe connection<br>• Adjustable system difference range — 1…70 psi<br>• Maximum line pressure — up to 600 psi<br>• Occasional surge pressure — up to 650 psi<br>**Type 316 Stainless Steel Bellows**<br>• 1/4 in. N.P.T.F. female pipe connection<br>• Adjustable system difference range — 1…70 psi<br>• Maximum line pressure — up to 500 psi<br>• Occasional surge pressure — up to 500 psi |

| Standards Compliance |
|---|
| • UL 508<br>• UL 698 (Haz. Loc.)<br>• UL 1604 (Haz. Loc.)<br>• CSA 22.2 No. 14<br>• NEMA ICS-2 |

| File and Guide Numbers | | | |
|---|---|---|---|
| UL | | CSA | |
| File Number | Guide Number | File Number | Class |
| E14842<br>E53048 (Haz. Loc.)(1) | NKPZ<br>NOWT | LR1234 ,<br>LR11924 (Haz. Loc.) | 3211-03<br>3218-05 |

**Certifications**

(1) Hazardous Location Enclosure not CE compliant. All other enclosed devices are CE compliant

## Technical Terms

| Term | Definition |
|---|---|
| Adjustable operating range | Total span within which the contacts can be adjusted to trip and reset. |
| Trip setting | Higher pressure setting at which value the contacts transfer from their normal state to a change state. |
| Reset setting | Lower pressure setting at which value the contacts return to their normal state. |
| Adjustable differential | Difference between the trip and reset values |
| Minimum differential | When the differential is set to the lowest possible difference between trip and reset. |
| Maximum differential | When the differential is set to the highest possible difference between trip and reset. |
| Max. occasional surge pressure | Maximum surge pressure that can be applied to the actuator. Surges or ransients can occur during start-up and shut-down of a machine or system. Expressed in milliseconds, complex electronic instrumentation is required to measure the varying amplitude, frequency, and duration of this wave form. Extreme surges that occur approximately 8 times in a 24-hour period are negligible. |
| Maximum line pressure | Maximum sustained pressure that can be applied to the actuator without permanent damage. The control should not be cycled at this pressure. Note: Does not apply to piston type controls. |
| psi | Pounds per square inch gauge (positive pressure). Devices listed are in gauge pressure units which use atmospheric pressure as a reference. Atmospheric pressure at sea level is approximately 14.7 psi or 30 in. Hg. |
| Vacuum | Inches of mercury (in. Hg) vacuum (negative pressure). |
| Operating range adjustment screw | This screw is used to adjust the trip setting by varying the force of the main spring. |
| Differential adjustment screw | This screw is used to adjust reset setting by varying the force of the differential blade spring. |
| Pressure media | There are many types of pressure media that can be controlled. Examples include air, water, hydraulic fluids, and other types of gases and liquids. The type of media and the maximum system pressure will determine the type of actuator used for the pressure control application. See Pressure Control Selection. |
| Pressure connection | Common standard types of pressure connections used in control systems are 1/4 in. and 3/8 in. N.P.T.F. female pipe threads. SAE 7/16 and SAE 9/16 O-ring boss seals are also available (piston versions only). |
| Contact configuration | Bulletin 836T controls are available with either a 2-circuit or 4-circuit contact block. See Contacts. |
| **Style D Specific Terms** | |
| Style D — pressure difference controls adjustable system difference range | The adjustable operating range for a pressure difference control. |
| System difference pressure bushing | This bushing is used to adjust the trip setting by varying the force on the main spring. |
| Trip setting | Desired difference in pressure between the two bellows at which value the contacts transfer from their normal state to a changed state. This occurs in one of the following conditions:<br>• The pressure in the bottom bellows is higher than the pressure in the top bellows by a value equal to the trip setting.<br>• The pressure in the bottom bellows remains constant and the pressure in the top bellows decreases by a value equal to the trip setting. |
| Reset setting | Predetermined normal difference in pressure between the two bellows, at which value the contacts return to their normal state. This occurs in one of the following conditions:<br>• The pressure in the bottom bellows is lower than the top bellows.<br>• The pressure in the bottom bellows remains constant and the pressure in the top bellows increases. |

**Figure 28 - Graphic to Illustrate Technical Terms**

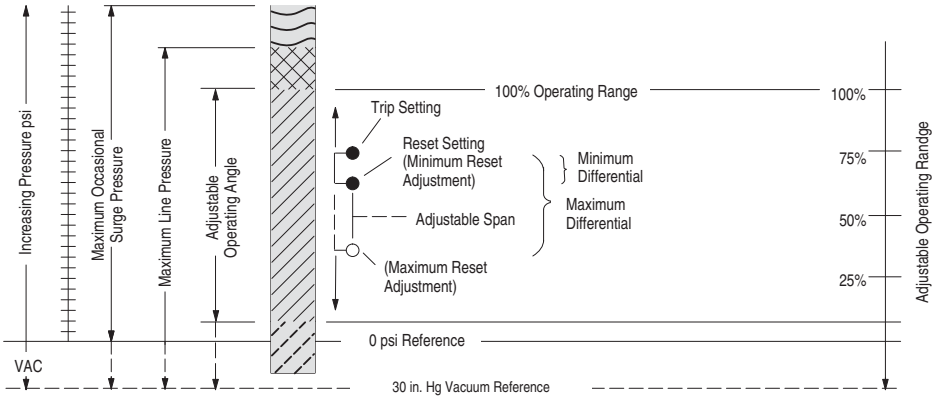

## Operation

Bulletin 836T Pressure Controls are designed to open or close electrical circuits in response to changes in pneumatic (air or gas) or hydraulic (oil or non-corrosive liquids) pressure. Piston controls are not intended for use with air or water. Figure 2 shows the basic operating mechanism.

Pressure is applied to the actuator which can be either a bellows or piston type. As pressure rises, the actuator exerts force on the main spring. When the threshold force of the main spring is overcome, levers transfer the motion to the contact block, displacing the contacts — this is referred to as the trip setting. The unique lever design amplifies the actuator motion, providing shorter stroke, which results in maximizing bellows life.

The lever assembly also includes a virtually friction-free over-center toggle arrangement, providing positive snap action to the contact block for long contact life. As pressure falls, force on the differential spring increases and contacts return to their normal state — this is referred to as reset setting. Varying the force of the main spring (by turning the operating range adjustment screw) determines when the contacts will trip. Varying the force of the differential spring (by turning the differential adjustment screw) determines when the contacts will reset. Setting trip and reset values determines the operating parameters of the application.

**Figure 29 - Basic Mechanical Structure**

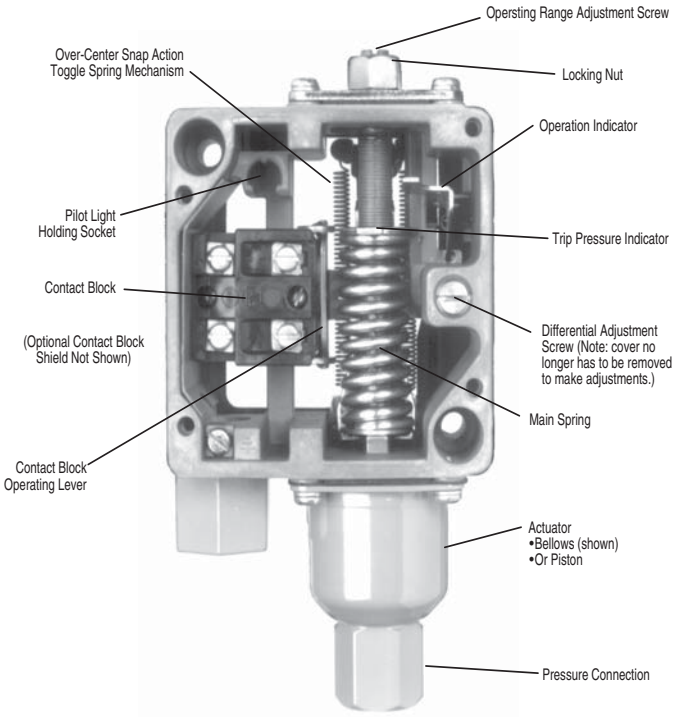


### *Applications for Control*

Pressure controls can be used to either control or monitor a machine or process. Figure 30 shows a typical control application. Here, pressure is controlled within predetermined high and low values. Figure 31 shows a typical monitoring application. Here, pressure is monitored between a high and low value, signaling when a preset limit has been exceeded.

**Figure 30 - Typical Control Application**

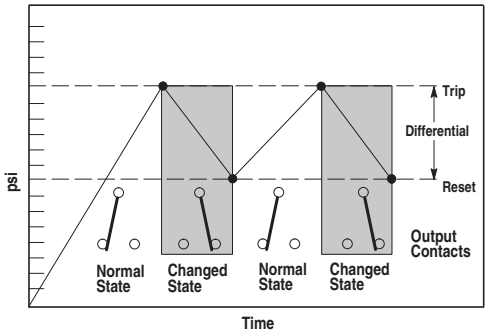


**Figure 31 - Typical Monitoring Application**

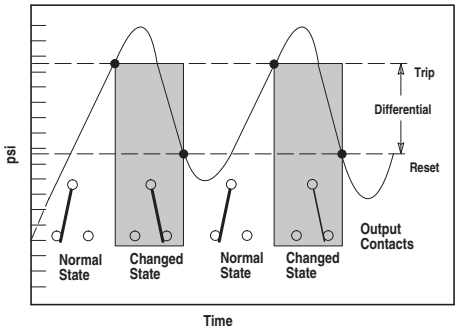

### *Control Setting — Style T Pressure Controls*

Allen-Bradley controls are designed for ease of setting to help minimize installation time. Standard pressure controls shipped from the factory are set at the maximum operating range and minimum differential. By using a pressure gauge and following these simple directions, the control can be set to the specific requirements for each application. See Figure 32 on page 25.

1. Adjust trip setting

   The trip setting is controlled by the operating range adjustment screw and is adjusted externally. After loosening the lock nut, the trip setting is set by turning the operating range adjustment screw counterclockwise to lower the trip setting or clockwise to raise the trip setting. The approximate trip setting is shown on the indicating scale. When the proper setting is reached, simply tighten the lock nut.

   **IMPORTANT** Turning the operating range adjustment screw causes the trip and reset settings to change in equal increments.

2. Adjust reset setting

   The reset setting is controlled by an external differential adjustment screw. The reset setting is set by turning the differential adjustment screw clockwise to increase the differential or counterclockwise to decrease the differential.

   **IMPORTANT** Adjusting the differential has little or no affect on the trip setting.

**Figure 32 - Trip and reset adjustment for pressure controls**

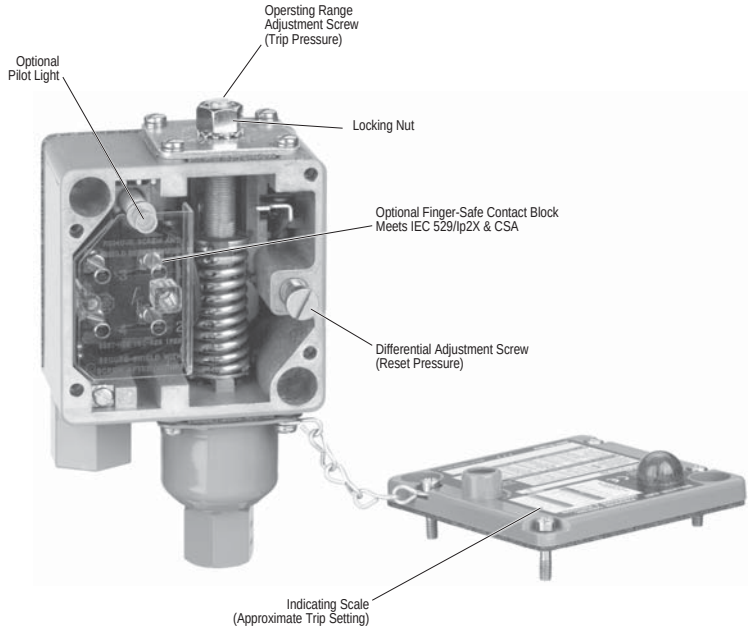

### *Control Setting — Style D Pressure Difference Controls*

Standard pressure difference controls shipped from the factory are set at the maximum adjustable difference range and minimum differential. Remove the front cover and use a pressure gauge to make the following adjustments. See Figure 33.

1. Adjust trip setting (difference pressure)

   The trip setting is controlled by the system difference pressure bushing and is adjusted internally. With no pressure (open to atmosphere) applied to top bellows, apply a constant pressure to bottom bellows equal to the desired difference in pressure at which the contacts are to trip. Insert a 1/8 in. diameter rod into a hole in the bushing and turn bushing to the left. Continue to turn bushing until the mechanism trips; circuit 1-2 will open. At this value, the trip setting is set at the pressure which is being applied to the bottom bellows.

   **IMPORTANT** Turning the system difference pressure bushing will cause both the trip and reset settings to change in virtually equal increments.

2. Adjust reset setting (differential pressure)

   The reset setting is controlled by differential adjustment screw (this adjustment can be made with the cover on). The reset setting is adjusted by turning the differential adjustment screw clockwise to increase the differential or counterclockwise to decrease the differential.

   **IMPORTANT** Adjusting the differential has little or no affect upon the trip setting (difference pressure).

**Figure 33 - Trip and reset adjustment for pressure difference controls — 4-circuit contact block**

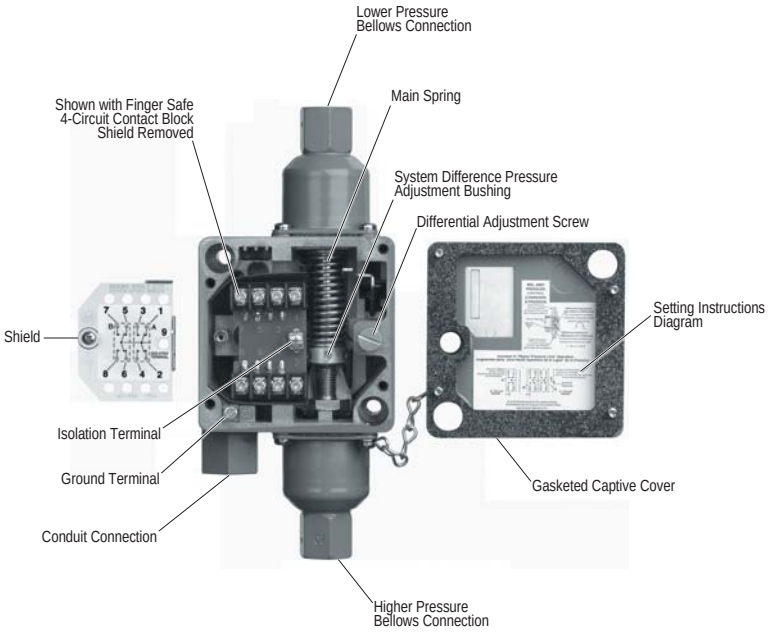

### *Repeat Accuracy and Mechanical Life*

The design and construction of Bulletin 836T Pressure Controls provide a typical repeat accuracy equal to or better than the values shown in the repeat accuracy table below. Repeat accuracy is based on percent of maximum range, evaluated from test data and calculated using the formula per ICS 2-225 standards. Repeat accuracy and mechanical life of bellows type controls is graphically illustrated inFigure 34 The life curve does not apply to piston type controls.

For general applications, controls selected where the contacts operate between 30% and 80% of the operating range and where the maximum line and surge pressures do not exceed the specified values will provide excellent life and repeat accuracy. For more specific applications, it is important to note that the controls are designed to operate below or above these values. However, there can be a small trade-off between the factors of repeat accuracy and mechanical life.

**Figure 34 - Repeat accuracy versus mechanical life graph**

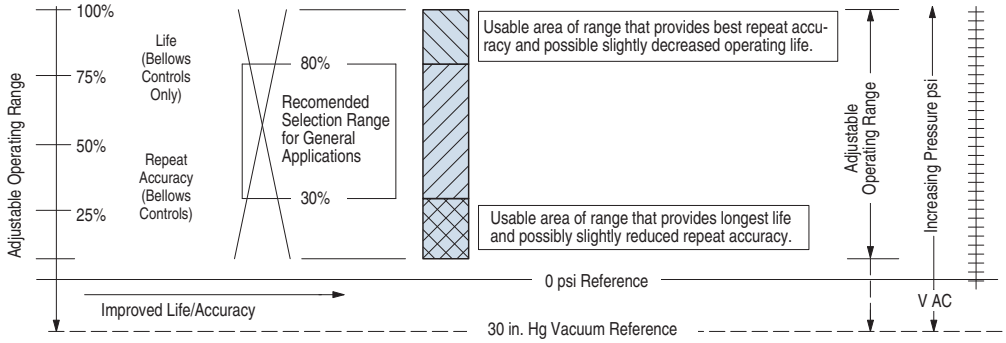


**Repeat Accuracy**

| Type | Typical Characteristics (% of Maximum Range)(1) |
|---|---|
| Bellows | ± 1% |
| Piston with seal | ± 5% (2) |
| Piston without seal | ± 3% |

(1) Evaluation made from test data and calculated using formula per ICS 2-225 standards

(2) Seal adds additional friction and value shown takes into consideration initial breakaway frictional force incurred during start-up or infrequent cycle operation. On continual cycle operation the repeat accuracy approaches ±3%.

**Conversion Factors (Rounded)Mounting without Removing Cover**

| | |
|---|---|
| psi x 703.1 | mm/H20 |
| psi x 27.68 | in. H20 |
| psi x 51.71 | mm/Hg |
| psi x 2.036 | in. Hg |
| psi x 0.0703 | kg/cm2 |
| psi x 0.0689 | bar |
| psi x 68.95 | mbar |
| psi x 6895 | Pa |
| psi x 6.895 | kPa |

**IMPORTANT** psi - pounds per square inch (gauge). $H_2O$ at 39.2 °F. Hg at 32 °F

Bulletin 836T controls can be mounted without removing the front cover. This helps prevent foreign materials from entering the opened enclosure during the interval between mounting and wiring of the control.

### *Factory Set Pressure Controls*

Rockwell Automation will factory set pressure controls to customer specified values only if a Cat. No. 836T-__C device is selected. Unspecified pressure controls (cat. nos. without the "C" suffix) shipped from the factory are set at the maximum operating range and minimum differential. See Ordering Factory-Set Pressure Controls on page 39.

### *Temperature Range*

The temperature range at +32 °F (0 °C) or below is based on the absence of freezing moisture, water, or other fluids that can solidify and impede the operation of the control.

**Temperature Ratings**

| | |
|---|---|
| Operating | –22…+150 °F (–30…+66 °C) |
| Storage | –22…+200 °F (–30…+93 °C) |

### Contacts

Bulletin 836T controls feature 2 and 4-circuit contact blocks for added control circuit flexibility. Two-circuit contact blocks have one normally open contact and one normally closed contact and can be arranged for single-pole double-throw operation or separate circuit operation having the same polarity. 4-circuit contact blocks can be arranged for double-pole double-throw operation or separate circuit operation having the same polarity.

#### 2-Circuit Contact Ratings

| Maximum Operational Volts Ue | Utilization Category | | Rated Operational Currents | | |
|---|---|---|---|---|---|
| | IEC | NEMA | Volts Ue | Make | Break |
| AC 600 | AC-15 | A600 | 120…600 | 7200 VA | 720 VA |
| | | | 72…120 | 60 A | 720 VA |
| | | | 24…72 | 60 A | 10 A |
| DC 600 | DC-13 | — | 115…600 | 50 VA | 50 VA |

#### 4-Circuit Contact Ratings

| Maximum Operational Volts Ue | Utilization Category | | Rated Operational Currents | | |
|---|---|---|---|---|---|
| | IEC | NEMA | Volts Ue | Make | Break |
| AC 240 | AC-15 | B300 | 120…240 | 3600 VA | 360 VA |
| DC 250 | DC-13 | R300 | 125…250 | 28 VA | 28 VA |

**IMPORTANT** NEMA does not rate contacts to switch low voltage and current. Bulletin 836T Styles T and D Pressure Controls are supplied with silver contacts. The devices are designed to deliver high force snap action to the contacts. This provides exceptional contact fidelity at 24V DC I/O card current level entry when the integrity of the enclosure is maintained.

**Figure 35 - 2-Circuit Contact Block Wiring Configuration**

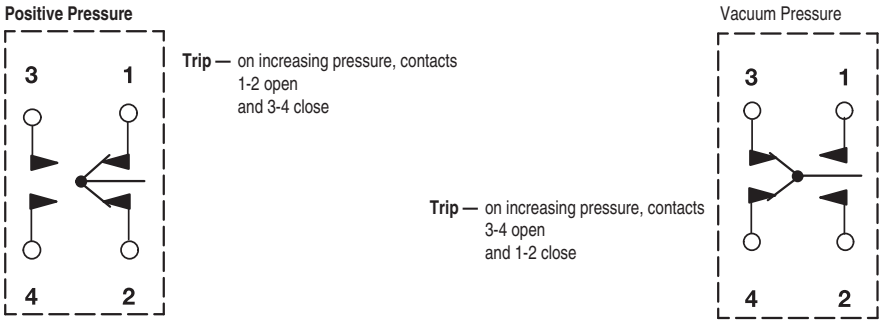


**Figure 36 - 4-Circuit Contact Blocks**

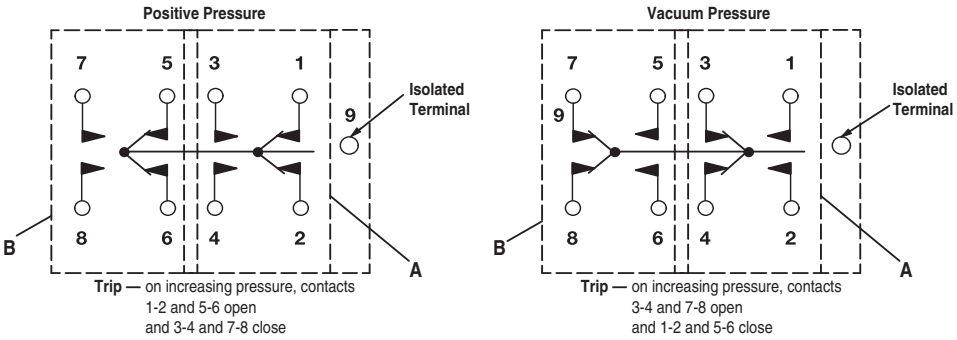


**Note**: Cicuits A and B are electrically isolated from one another.
**A or C circuits must be the same polarity.**

### *Nameplate with Removable Paint Mask*

The masks are convenient for the many users who repaint controls to match the machine or color code equipment. Saves costly time-consuming hand masking necessary so as not to conceal product functional specifications and approval listings. This feature is standard on most controls at no additional cost. The paint mask feature cannot be supplied on controls with pilot lights. They are also not available on those devices where it is necessary to remove the mask and add suffix modifications to the catalog number or specific customer identification in the space provided.

**Figure 37 - Cover with Transparent Mask and Instruction Label in Place**

**Figure 38 - Cover with Mask Partially Removed**

### *Pressure Control Selection*

The selection table below is an overview of the five types of AugustBulletin 836T Pressure Controls Rockwell Automation offers. Each type of control is suitable for use on many types of applications. Pressure ranges, pressure connections, enclosure types, and the compatibility of the actulator with different types of pressure media are given to assist in the selection of which type of control to use.

| **836T** | | | | |
|---|---|---|---|---|
| **Actuator Type** | **Copper Alloy Bellows** | **Type 316 Stainless Steel Bellows** | **Piston Type Without Seal** | **Piston Type With Seal** |
| Adjustable operating ranges | 30 in. Hg vacuum…650 psi | 30 in. Hg vacuum…375 psi | 40…5000 psi | 80…5000 psi |
| Adjustable differentials | 2…125 psi | 2…90 psi | 20…650 psi | 40…650 psi |
| Maximum line pressures | up to 1300 psi | up to 600 psi | — | — |
| Occasional surge pressures | up to 1600 psi | up to 600 psi | up to 15,000 psi | up to 15,000 psi |
| **Pressure Media** | | | | |
| Air | • | • | | |
| Water | • | • | • | • |
| Hydraulic fluids | • | • | • | • |
| Corrosive liquids(1) | | • | | |
| Non-corrosive liquids | • | • | • | • |
| Corrosive gases(2) | | • | | |
| Non-corrosive gases | • | • | | |
| **Enclosures** | | | | |
| Type 1, 4 & 13 | • | • | • | • |
| Type 7 & 9 and 4 & 13, IP66 | • | • | • | • |
| **Pipe Connections** | | | | |
| Standard pressure connection | 1/4 in. N.P.T.F. female pipe thread | 1/4 in. N.P.T.F. female pipe thread | 3/8 in. N.P.T.F. female pipe thread SAE 7/16-20 UNF-2B thread O-ring boss seal SAE 9/16-18 UNF-2B thread O-ring boss seal | 3/8 in. N.P.T.F. female pipe thread SAE 7/16-20 UNF-2B thread O-ring boss seal SAE 9/16-18 UNF-2B thread O-ring boss seal |

(1) Corrosive liquids must be compatible with Type 316 Stainless Steel Bellows.
(2) Corrosive gases must be compatible with Type 316 Stainless Steel Bellows.

**IMPORTANT** Pressure difference controls are supplied with either copper alloy or stainless steel bellows. See Product Selection at Style D Pressure Difference Controls with Copper Alloy Bellows — S.P.D.T. 2-Circuit Contact Block§ and Style D Pressure Difference Controls with Type 316 Stainless Steel Bellows — S.P.D.T. 2-Circuit Contact Block for details.

## Ordering Information

When ordering Bulletin 836T Pressure Controls, consider the following:

- Device style
- Occasional surge pressure
- Adjustable operating range
- Pressure media
- Adjustable differential
- Enclosure type
- Maximum line pressure
- Pressure connection

| 1. Select Basic Device | 2. Modifications | 3. Accessories | 3. Factory Options |
|---|---|---|---|
| Select a catalog number for the basic device. See Product Selection - Style T on page 31 | If required, add one or more appropriate modification suffix codes to the catalog number of the basic device. See Modifications on page 37 | If required, select appropriate accessories. See Accessories on page 38 | Factory-set pressure controls. See Ordering Factory-Set Pressure Controls on page 39 |

## Catalog Number Explanation

| 836T | – | T | 25 | 1 | J | X40 | X15 | C |
|---|---|---|---|---|---|---|---|---|
| | | a | b | pressure specifications | c | d | Modifications Add suffix codes in descending order whenever possible. See Modifications on page 37. | e |

**a**

**Style of Device**

| Code | Description |
|---|---|
| T | Pressure Control |
| D | Pressure Difference Control |

**b**

**Operator Type**

| Code | Style | Description |
|---|---|---|
| 25 | T | Copper alloy bellows |
| 26 | T | Type 316 stainless steel bellows |
| 30 | T | Piston without seal |
| 35 | T | Piston with seal |
| 40 | T | Piston with seal (independent trip and reset adjustment) |
| 45 | D | Copper alloy bellows |
| 46 | D | Type 316 stainless steel bellows |

**c**

**Enclosure Type**

| Code | Description |
|---|---|
| J | 1, 4 & 13 Industrial use |
| E | 7 & 9 and 4 & 13 Combined hazardous locations |

**d**

**Contact Block Type**

| Code | Description |
|---|---|
| blank | 2-circuit contact block - standard |
| X40 | 4-circuit contact block - |

**e**

**Customer Specified Trip or Reset**

| Code | Description |
|---|---|
| blank | Max. range/ min. differential |
| C | Customer specified trip/ reset setting(1) |

(1) The requested trip/reset setting must be within the adjustable operating and differential ranges for the pre-configured product, refer to Product Selection.

## Product Selection - Style T

**Figure 39 - Style T — Type 1, 4 & 13 with Pilot Light, Range Locking Cap, and 5-Pin Mini-Receptacle**

**Figure 40 - Style T — Type 1, 4 & 13 with Pilot Light Option**

### Style T Pressure Controls with Copper Alloy Bellows [1]

Standard pressure controls shipped from the factory are set at the maximum operating range and minimum differential. For more information on standard pressure control settings and customer-specified pressure control settings, consult your local Rockwell Automation sales office or Allen-Bradley distributor.

| Pressure Specifications | | | | Enclosure Type | |
|---|---|---|---|---|---|
| Adjustable Operating Range [psi] | Adjustable Differential [psi] (Approximate Mid-Range Values) | Maximum psi | | Type 1, 4 & 13 | Type 7 & 9 and 4 & 13 [2] |
| | | Line Pressure | Occasional Surge Pressure[1] | Cat. No. | Cat. No. |
| **S.P.D.T. 2-Circuit Contact Block** | | | | | |
| 30 in. Hg vacuum…35 | 2…7 | 80 | 90 | 836T-T251J | 836T-T251E |
| 6…75 | 3…15 | 200 | 220 | 836T-T252J | 836T-T252E |
| 12…150 | 6…30 | 350 | 450 | 836T-T253J | 836T-T253E |
| 20…300 | 10…55 | 600 | 750 | 836T-T254J | 836T-T254E |
| 40…450 | 20…90 | 900 | 1200 | 836T-T255J | 836T-T255E |
| 60…650 | 30…125 | 1300 | 1600 | 836T-T256J | 836T-T256E |
| **D.P.D.T. 4-Circuit Contact Block** | | | | | |
| 30 in. Hg vacuum…35 | 2.2…7 | 80 | 90 | 836T-T251JX40 | 836T-T251EX40 |
| 6…75 | 4.5…15 | 200 | 220 | 836T-T252JX40 | 836T-T252EX40 |
| 12…150 | 9…30 | 350 | 450 | 836T-T253JX40 | 836T-T253EX40 |
| 20…300 | 15…55 | 600 | 750 | 836T-T254JX40 | 836T-T254EX40 |
| 40…450 | 30…90 | 900 | 1200 | 836T-T255JX40 | 836T-T255EX40 |
| 60…650 | 45…125 | 1300 | 1600 | 836T-T256JX40 | 836T-T256EX40 |

(1) Transients (pulses) can occur in a system prior to reaching a steady-state condition. Surge pressures within published values generated during start-up or shut-down of a machine or system, not exceeding eight times in a 24-hour period, are negligible.

(2) The combined Type 7 & 9 and 4 & 13 Hazardous Gas and Dust service enclosure is supplied with special gasket and O-ring seal to diminish/exclude moisture, fluids, and dust from entering the enclosure. Enclosure is Rated for the Following Environments: CLASS I Groups C and D, CLASS II Groups E,F, and G, CLASS III

(1) Copper alloy bellows can be used on water or air, and other liquids or gases not corrosive to this alloy.

**Figure 41 - Style T — Type 1, 4 & 13 with Pilot Light Option**

**Figure 42 - Style T —Type 7 & 9 and 4 & 13**

### Style T Pressure Controls with Type 316 Stainless Steel Bellows(1)

Standard pressure controls shipped from the factory are set at the maximum operating range and minimum differential. For more information on standard pressure control settings and customer-specified pressure control settings, consult your local Rockwell Automation sales office or Allen-Bradley distributor.

| Pressure Specifications | | | | Enclosure Type | |
|---|---|---|---|---|---|
| Adjustable Operating Range [psi] | Adjustable Differential [psi] (Approximate Mid-Range Values) | Maximum psi | | Type 1, 4 & 13 | Type 7 & 9 and 4 & 13 (2) |
| | | Line Pressure | Occasional Surge Pressure(1) | Cat. No. | Cat. No. |
| **S.P.D.T. 2-Circuit Contact Block** | | | | | |
| 30 in. Hg vacuum…35 | 2…7 | 65 | 65 | 836T-T260J | 836T-T260E |
| 8…100 | 4…20 | 200 | 200 | 836T-T261J | 836T-T261E |
| 24…250 | 12…50 | 500 | 500 | 836T-T262J | 836T-T262E |
| 40…375 | 20…90 | 600 | 600 | 836T-T263J | 836T-T263E |
| **D.P.D.T. 4-Circuit Contact Block** | | | | | |
| 30 in. Hg vacuum…35 | 2.2…7 | 65 | 65 | 836T-T260JX40 | 836T-T260EX40 |
| 8…100 | 6…20 | 200 | 200 | 836T-T261JX40 | 836T-T261EX40 |
| 24…250 | 18…50 | 500 | 500 | 836T-T262JX40 | 836T-T262EX40 |
| 40…375 | 30…90 | 600 | 600 | 836T-T263JX40 | 836T-T263EX40 |

(1) Transients (pulses) can occur in a system prior to reaching a steady-state condition. Surge pressures within published values generated during startup or shutdown of a machine or system, not exceeding eight times in a 24-hour period, are negligible.

(2) The combined Type 7 & 9 and 4 & 13 hazardous gas and dust service enclosure is supplied with special gasket and O-ring seal to diminish/exclude moisture, fluids, and dust from entering the enclosure. Enclosure is rated for the following environments: CLASS I Groups C,D, CLASS II Groups E,F,G, and CLASS III

(1) Type 316 stainless steel bellows are available for more corrosive liquids or gases.

### *Piston-type Controls, Important Application Information*

Piston-type controls are designed for use with oil and high water-based hydraulic fluids containing high-lubricity substances which will not attack alloy steel. Piston-type controls are available without seals to reduce piston friction. Reduced friction results in narrower switch differentials required for some applications.

All piston-type controls are equipped with a diaphragm assembly that conveys the motion of the piston to the mechanism, and prevents any fluid from entering the enclosure. Controls without seals are provided with a drain that should be connected to a line returning the piston by-pass fluid to a reservoir for reuse. The reservoir must be vented to the atmosphere. Manifold-type return lines that are fed by other equipment and/or contain a back-up check valve are not satisfactory. Extreme transient pulses can develop from hydraulic inertia in the line and rupture the diaphragm located on the secondary side of the piston, forcing fluid into the enclosure. For systems of this type, pressure controls with seals are recommended as return lines are not required if a slight amount of leakage, over time, can be tolerated. Drains should never be plugged. It is not recommended that a back pressure of more than the head pressure be applied to the diaphragm. This can occur if the reservoir is located above the machine. Variable back pressure can cause setting instability.

**IMPORTANT**
- Listed differentials can vary due to piston and cylinder tolerance, and characteristics of the fluid and application.
- Do not use piston-type controls on air, gases, or other liquids that will corrode stainless steel.
- Hydraulic fluid return line to reservoir is recommended

**Figure 43 - Style T — Type 1, 4 & 13**

**Figure 44 - Style T —Type 1, 4 & 13 with Pilot Light, Mini-Receptacle, SAE Thread**

### Style T Pressure Controls Piston without Seal(1)

Standard Pressure Controls shipped from the factory are set at the maximum operating range and minimum differential.

| Pressure Specifications | | | | Enclosure Type | |
|---|---|---|---|---|---|
| Adjustable Operating Range [psi] | Adjustable Differential [psi] (Approximate Mid-Range Values) | Maximum psi | | Type 1, 4 & 13 | Type 7 & 9 and 4 & 13 (2) |
| | | Line Pressure | Occasional Surge Pressure(1) | Cat. No. | Cat. No. |
| **S.P.D.T. 2-Circuit Contact Block** | | | | | |
| 40…550 | 30...75 | — | 5000 | 836T-T300J | 836T-T300E |
| 70…1000 | 75...175 | — | 10000 | 836T-T301J | 836T-T301E |
| 200…3000 | 175...400 | — | 15000 | 836T-T302J | 836T-T302E |
| 350…5000 | 260...650 | — | 15000 | 836T-T303J | 836T-T303E |
| **D.P.D.T. 4-Circuit Contact Block (Hydraulic fluid return line to reservoir is recommended)** | | | | | |
| 40…550 | 30…75 | — | 5000 | 836T-T300JX40 | 836T-T300EX40 |
| 70…1000 | 60…175 | — | 10000 | 836T-T301JX40 | 836T-T301EX40 |
| 200…3000 | 150…400 | — | 15000 | 836T-T302JX40 | 836T-T302EX40 |
| 350…5000 | 260…650 | — | 15000 | 836T-T303JX40 | 836T-T303EX40 |

(1) Transients (pulses) can occur in a system prior to reaching a steady-state condition. Surge pressures within published values generated during start-up or shut-down of a machine or system, not exceeding eight times in a 24-hour period, are negligible.

(2) The combined Type 7 & 9 and 4 & 13 Hazardous Gas and Dust service enclosure is supplied with special gasket and O-ring seal to diminish/exclude moisture, fluids, and dust from entering the enclosure. Enclosure is Rated for the Following Environments: CLASS I Groups C,D; CLASS II Groups E,F,G; CLASS III

(1) When phosphate ester base hydraulic fluid is present, a special diaphragm assembly is required. See Modifications on page 37.

**Figure 45 - Style T — Type 1, 4 & 13**

**Figure 46 - Style T —Type 1, 4 & 13 with Pilot Light, Mini-Receptacle, SAE Thread**

**Style T Pressure Controls Piston with Seal (Hydraulic fluid return line to reservoir is not required)**
**Standard Pressure Controls shipped from the factory are set at the maximum operating range and minimum differential.**

| Pressure Specifications | | | | Enclosure Type | |
|---|---|---|---|---|---|
| Adjustable Operating Range [psi] | Adjustable Differential [psi] (Approximate Mid-Range Values) | Maximum psi | | Type 1, 4 & 13 | Type 7 & 9 and 4 & 13 (2) |
| | | Line Pressure | Occasional Surge Pressure(1) | Cat. No. | Cat. No. |
| **S.P.D.T. 2-Circuit Contact Block** | | | | | |
| 80…550 | 60...75 | — | 5000 | 836T-T350J | 836T-T350E |
| 140…1000 | 100...175 | — | 10 000 | 836T-T351J | 836T-T351E |
| 400…3000 | 300...400 | — | 15 000 | 836T-T352J | 836T-T352E |
| 700…5000 | 525...650 | — | 15 000 | 836T-T353J | 836T-T353E |
| **D.P.D.T. 4-Circuit Contact Block** | | | | | |
| 80…550 | 60…75 | — | 5000 | 836T-T350JX40 | 836T-T350EX40 |
| 140…1000 | 100…175 | — | 10 000 | 836T-T351JX40 | 836T-T351EX40 |
| 400…3000 | 300…400 | — | 10 000 | 836T-T352JX40 | 836T-T352EX40 |
| 700…5000 | 525…650 | — | 15 000 | 836T-T353JX40 | 836T-T353EX40 |

(1) Transients (pulses) can occur in a system prior to reaching a steady-state condition. Surge pressures within published values generated during start-up or shut-down of a machine or system, not exceeding eight times in a 24-hour period, are negligible.
(2) The combined Type 7 & 9 and 4 & 13 Hazardous Gas and Dust service enclosure is supplied with special gasket and O-ring seal to diminish/exclude moisture, fluids, and dust from entering the enclosure. Enclosure is Rated for the Following Environments: CLASS I Groups C,D; CLASS II Groups E,F,G;CLASS III

**IMPORTANT** When phosphate ester base hydraulic fluid is present, a special diaphragm assembly is required. See Modifications on page 37.

**Independent Trip and Reset Adjustment for Wide Differential Applications — Piston with Seal, S.P.D.T. 2-Circuit Contact Block (Hydraulic fluid return line to reservoir is not required)**

Standard Pressure Controls shipped from the factory are set at the maximum operating range and minimum differential.

| Pressure Specifications | | | Enclosure Type | |
|---|---|---|---|---|
| Adjustable High Trip Setting [psi] | Adjustable Low Reset Setting [psi] | Occasional Surge Pressure [psi] | Type 1, 4 & 13 | Type 7 & 9 and 4 & 13(1) |
| | | | Cat. No. | Cat. No. |
| 500…3000 | 0…250 | 15 000 | 836T-T400J | 836T-T400E |

(1) The combined Type 7 & 9 and 4 & 13 Hazardous Gas and Dust service enclosure is supplied with special gasket and O-ring seal to diminish/exclude moisture, fluids, and dust from entering the enclosure. Enclosure is Rated for the Following Environments: CLASS I Groups C,D; CLASS II Groups E,F,G;CLASS III

## Product Selection - Style D

**Figure 47 - Style D — Type 1, 4 & 13with Pilot Light Option**

**Figure 48 - Style D — Type 1, 4 & 13**

### Style D Pressure Difference Controls with Copper Alloy Bellows(1) (2) (3)

Standard Pressure Difference Controls shipped from the factory are set at the maximum adjustable difference range and minimum differential.

| Pressure Specifications | | | | | Enclosure Type 1, 4 & 13 |
|---|---|---|---|---|---|
| Adjustable System Difference Range [psi] | Adjustable Differential [psi] (Approximate Mid-Range Values) | Line Pressure psi | | Max. Occasional Surge Pressure [psi] | Cat. No. |
| | | Minimum | Maximum | | |
| **S.P.D.T. 2-Circuit Contact Block** | | | | | |
| 1…9 | 1…7 | 30 in. Hg Vac. | 80 | 90 | 836T-D450J |
| 2.5…20 | 2.5…15 | 30 in. Hg Vac. | 175 | 200 | 836T-D451J |
| 5…40 | 5…30 | 30 in. Hg Vac. | 350 | 375 | 836T-D452J |
| 10…70 | 10…50 | 0 | 600 | 650 | 836T-D453J |
| **D.P.D.T. 4-Circuit Contact Block** | | | | | |
| 1…9 | 1.5…7 | 30 in. Hg Vac. | 80 | 90 | 836T-D450JX40 |
| 2.5…20 | 3.75…15 | 30 in. Hg Vac. | 175 | 200 | 836T-D451JX40 |
| 5…40 | 7.5…30 | 30 in. Hg Vac. | 350 | 375 | 836T-D452JX40 |
| 10…70 | 15…50 | 0 | 600 | 650 | 836T-D453JX40 |

(1) Copper alloy bellows can be used on water or air, and other liquids or gases not corrosive to this alloy.

(2) Finger-safe shield supplied as standard.

(3) Transients (pulses) can occur in a system prior to reaching a steady-state condition. Surge pressures within published values generated during startup or shutdown of a machine or system, not exceeding eight times in a 24-hour period, are negligible.

**Figure 49 - Style D — Type 1, 4 & 13 with Pilot Light Option**

**Figure 50 - Style D — Type 1, 4 & 13**

### Style D Pressure Difference Controls with Type 316 Stainless Steel Bellows(1)(2)(3)

Standard Pressure Difference Controls shipped from the factory are set at the maximum adjustable difference range and minimum differential.

| Pressure Specifications | | | | | Enclosure Type 1, 4 & 13 |
|---|---|---|---|---|---|
| Adjustable System Difference Range [psi] | Adjustable Differential [psi] (Approximate Mid-Range Values) | Line Pressure [psi] | | Max. Occasional Surge Pressure [psi] | Cat. No. |
| | | Minimum | Maximum | | |
| **S.P.D.T. 2-Circuit Contact Block** | | | | | |
| 1…9 | 1…7 | 30 in. Hg Vac. | 65 | 65 | 836T-D460J |
| 5…25 | 4…15 | 0 | 175 | 200 | 836T-D462J |
| 12…70 | 12…50 | 0 | 500 | 500 | 836T-D463J |
| **D.P.D.T. 4-Circuit Contact Block** | | | | | |
| 1…9 | 1.5…7 | 30 in. Hg Vac. | 65 | 65 | 836T-D460JX40 |
| 5…25 | 6…15 | 0 | 175 | 200 | 836T-D462JX40 |
| 12…70 | 18…50 | 0 | 500 | 500 | 836T-D463JX40 |

(1) Type 316 stainless steel bellows are available for corrosive liquids or gases
(2) Transients (pulses) can occur in a system prior to reaching a steady-state condition. Surge pressures within published values generated during startup or shutdown of a machine or system, not exceeding eight times in a 24-hour period, are negligible.
(3) Finger-safe shield supplied as standard.

## Modifications

Modifications are ordered by adding the appropriate modification suffix code to the catalog number of the basic device. Add suffix codes to the catalog number in descending order.

| Item | Description | Suffix Code |
|---|---|---|
| Oxygen/nitrous oxide service | Bellows and fittings specially prepared for oxygen and nitrous oxide service. Devices tested with pure oxygen, bellows plugged for protection from contamination and a tag warning against contamination is applied. | X2 |
| External adjustment sealed | The 836T external adjustment is sealed, requiring cover removal to adjust differential (includes contact block shield) | X3 |
| Tamper resistant setting | Range and differential adjustments are factory sealed. Price includes factory setting charge.(2) | X4 |
| SAE 7/16-20 UNF thread O-ring boss seal (piston type pressure control) | Female SAE straight thread O-ring seal designed to prevent leaks and minimize loss of hydraulic fluids. | X6 |
| SAE 9/16-18 UNF thread O-ring boss seal (piston type pressure control) | | X7 |
| LED Pilot Light, 120V AC | Contact modified industrial controls team to select LED color and to configure catalog number. | — |
| Red LED pilot light 24V DC | A high-intensity LED 24V DC pilot light is available to meet the requirements of the automotive, machine tool builders, and other industries. The current rating is 22 mA and can be wired for ON or OFF operation.‡ | X15 |
| Green LED pilot light 24V DC | | X18 |
| Special diaphragm assembly (piston type pressure control) | Diaphragm is made of Viton® and Nomex® fabric. Required when phosphate ester base and other adverse hydraulic fluids are present. Use on Catalog Numbers **836T-T300J** through **836T-T303J** series controls. | X25 |
| Special diaphragm and O-ring assembly (piston type pressure control) | Diaphragm is made of Viton® and Nomex® fabric, O-ring is made of Viton®. Required when phosphate esterbase and other adverse hydraulic fluids are present. Use on Catalog Numbers **836T-T350J, -T351J, -T352J, -T353J** and **-T400J** series controls. | X26 |
| Viton® enclosure gaskets | Special enclosure gaskets made of Viton® are available for applications where the standard gasket materials are not fluid compatible. Viton® is generally specified by the user for use with existing and newly developed coolants and hydraulic fluids to maintain enclosure integrity. These include cover, backplate, cover, and bellows or piston gaskets. **Note**: Viton® enclosure gaskets are often used with special diaphragm assemblies **(X25 or X26)**. See description above. | X29 |
| 4-Pin micro-type receptacle without pilot light‡ | Select the desired pin wiring configuration. Rated at 4 A, 250V. Pin/Wiring Code: 1 – Brown, 2 – White, 3 – Blue, 4 – Black | Refer to Wiring Diagrams on page 40 |
| 4-Pin micro-type receptacle with prewired pilot light‡ | Select the desired pin wiring configuration and pilot light (X9, X15, or X18; see above for specifications) from the Wiring Diagrams. Rated at 4 A, 250V. Pin/Wiring Code: 1 – Brown, 2 – White, 3 – Blue, 4 – Black<br>The X139 modification is only applicable for 4-circuit contact block configurations and includes a 10 kW resistor. | |
| 5-Pin mini-type receptacle without pilot light‡ | Select the desired pin wiring configuration. Rated at 8 A, 600V. | |
| 5-Pin mini-type receptacle with prewired pilot light‡ | Select the desired pin wiring configuration. Includes receptacle and pilot light. Rated at 8 A, 600V. | |
| 5-Pin micro-connect receptacle without pilot light‡ | Select the desired pin wiring configuration. Add number "1" to the suffix number immediately following the letter "X." **Example: "X19" becomes "X119."** Rated at 3 A, 300V. Pin/Wiring Code: 1 – Red with white tracer, 2 – Red, 3 – Green (Gnd), 4 – Red with yellow tracer, 5 – Red with Black Tracer | |
| 5-Pin micro-connect receptacle with prewired pilot light‡ | Select the desired pin wiring configuration and pilot light (X9 or X15, see above for specifications. Add number "1" to the Suffix Number immediately following the letter "X." **Example: "X21X9" becomes "X121X9."** Rated at 3 A, 300V. Also included is modification X145 and X181. Pin/Wiring Code: 1 – Red with white tracer, 2 – Red, 3 – Green (Gnd), 4 – Red with yellow tracer, 5 – Red with black tracer | |
| Additional optional receptacles and wiring(1) | For assistance, please consult your local Rockwell Automation sales office or Allen-Bradley distributor. | |

(1) Not available on the Type 7 & 9 and 4 & 13 combined enclosed devices.
(2) See Ordering Factory-Set Pressure Controls on page 39

## Accessories

Accessories are ordered as separate catalog numbers. Select the required accessories from the accessories table below.

| Item | Description | Type | Cat. No. |
|---|---|---|---|
| External fixed pulsation snubbers | Controls are supplied as standard with an internal pulsation snubber. However, a control properly selected and used within the adjustable range values, yet having a short bellows life, is a good indication of the presence of extreme surge pressures. External fixed pulsation snubbers are available to provide **additional** dampening when extreme pulsations or surges are present. Recommended if more than eight line surges occur in a 24-hour time period. | Snubber for bellows control 1/4-18 N.P.T.F. thread | 836-N7 |
| | | Snubber for piston control 3/8-18 N.P.T.F. thread | 836T-N8 |
| Selectable element pulsation snubbers | Controls are supplied as standard with an internal pulsation snubber. However, a control properly selected and used within the adjustable range values, yet having a short bellows life, is a good indication of the presence of extreme surge pressures. Selectable element pulsation snubbers are supplied with five different elements to provide a selectable balance between maximizing pressure control life and minimizing control response time. Pulsation snubbers are supplied with the mid-range element already mounted and four other color-coded porosity elements included in the package. See "Selectable Pulsation Snubber Porosity Elements" table on for porosity specifications. | Snubber for bellows control 1/4-18 N.P.T.F. thread | 836-N40 |
| Locking cap | Deters unauthorized tampering of range setting. Once installed, the locking cap can be removed with a screwdriver to re-adjust the control. | — | 836T-N13 |
| Isolation trap with two 1/4 in. male pipe fittings | An isolation trap is available for high-temperature media applications from 150…600 °F or corrosive applications compatible with Type 316 stainless steel tubing and fittings. The isolation coil is inserted between the bellows of the pressure control and the elevated temperature line of the system. The isolation trap will fill with condensed water or can be filled with water or suitable fluid when installed. A silicone buffer fluid is available in a convenient dispenser. Copper alloy lower and higher pressure range bellows can be applied to many applications using the isolation trap. The silicone buffer fluid is used to isolate many corrosive substances from coming in contact with the bellows. The isolation trap is rated at 3000 psi working pressure. Not available for piston-type controls.See photo below. | | 836-N25 |
| Isolation trap with one 1/4 in. male and one 1/4 in. female pipe fittings | | | 836-N26 |
| 2 oz. of buffer fluid to fill bellows and tubing | | | 836-N27 |
| Metric electrical entry conduit adapters | BS 20 mm thread adapter | | 836T-N36 |
| | Pg 13.5 thread adapter | | 836T-N37 |

### Selectable Pulsation Snubber Porosity Elements

| Recommended Type of Service[1] | Color Code[2] | Porosity |
|---|---|---|
| Viscous fluids (over 500 SSU) | None | Coarser |
| Medium type oils (225…500 SSU) | Black | ↕ |
| Water and light oils (30… 225 SSU) | Brown | |
| Low viscosity fluids (under 30 SSU) | Green | |
| Air and other gases | Red | Finer |
| One of each of the above | — | Assorted |

(1) Saybolt Seconds Universal (SSU) — units of viscosity measurement.
(2) Color code is located on end of element.

**Figure 51 - Isolation Trap and Silicone Buffer Fluid**

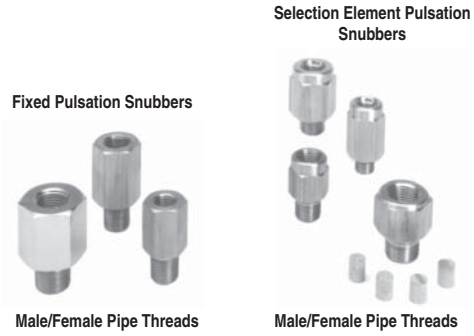


**Figure 51 - Pulsation Snubbers**

## Conversion Kits

Conversion Kits are ordered by adding the appropriate suffix code to the catalog number of the basic device. Select the required conversion kits from the table below.

| Item | Description | Suffix Code |
|---|---|---|
| Red LED pilot light conversion kit | Converts standard control to control with 24V DC LED pilot light; has a 22 mA current rating. Not available on Type 7 & 9 devices. Kit includes pilot light and cover assembly. | N15 |
| Green LED pilot light conversion kit | | N18 |

**EXAMPLE** To convert a Cat. No. **836T-T301J** to a Cat. No. **836T-T301JX15**, order Cat. No. **836T-T301JN15**.

## Renewal Parts

Renewal Parts are ordered as separate catalog numbers. Select the required renewal parts from the table below.

| Item | Description | Cat. No. |
|---|---|---|
| 2-Circuit contact block renewal kit | Allows renewal of worn contacts for Bulletin 836T controls. | 836T-N1 |
| Renewal seals for piston-type controls | For use on Cat. No. 836T-T350J. | 836T-N20 |
| | For use on Cat. No. 836T-T351J. | 836T-N21 |
| | For use on Cat. No. 836T-T352J and 836T-T400J. | 836T-N22 |
| | For use on Cat. No. 836T-T353J. | 836T-N23 |

## Ordering Factory-Set Pressure Controls

### *Standard Product Offering*

Standard pressure controls shipped from the factory are set at the maximum operating range and minimum differential. These settings vary for each pressure switch family depending on the combination of Style, Operator Type, and Pressure Specification configuration options. These pressure switches do not require a custom trip / reset setting characteristic. Customers still have the ability to set the operating range and differential in the field as long as they are within the limitation of switch.

### *Custom Product Offering (Customer-Specified Settings)*

Pressure controls shipped from the factory can be set to customer-requested values as long as they are within the limitation of the switch. See Product Selection, and reference Adjustable Operating Range and Adjustable Differential values in the tables. These trip and reset ranges vary depending on the Style, Operator Type, and Pressure Specification configuration. These switches require a custom trip / reset setting characteristic. To request a pressure switch with customer specified trip and/or reset settings, order a pressure control catalog number ending with the "C" Custom Trip Reset Setting characteristic and include one of the following factory-set pressure control statements when the order is placed (within the Customer Review Request Notes field):

**EXAMPLE**

Normally Closed (N.C.) contacts to open at * psi increasing pressure and close at * psi decreasing pressure.
—OR—
Normally Open (N.O.) contacts to close at * psi increasing pressure and open at * psi decreasing pressure.

*If minimum differential is not critical and the inherent minimum differential satisfies the application, specify the factory setting as follows:*

Normally Closed (N.C.) contacts to open at * psi increasing pressure. Minimum differential.
—OR—
Normally Open (N.O.) contacts to close at * psi increasing pressure. Minimum differential.

* Specify psi (pounds per square inch) or, in. Hg vacuum (inches of mercury vacuum)

When a specific factory setting is requested, the specific terminal connections must be specified — e.g., N.O. or N.C. It must also be specified whether the contact operation is occurring on either increasing or decreasing pressure.

If not specified, settings tolerances will be as shown in table.

**Setting Tolerances**

| Pressure Range | Tolerance |
|---|---|
| 30 in. Hg Vac.…0 psi | +/- 1 in. Hg Vac. |
| > 0…100 psi | +/- 1 psi |
| > 100…300 psi | +/- 2 psi |
| > 300…500 psi | +/- 5 psi |
| > 500…1000 psi | +/- 10 psi |
| > 1000…5000 psi | +/- 50 psi |

## Wiring Diagrams

*Bulletin 836T 5-Pin Mini-Type Receptacle Option Wiring Reference (J1 Wiring).*[(1)(2)]

### Figure 52 - Without Pilot Light

**Suffix X19**

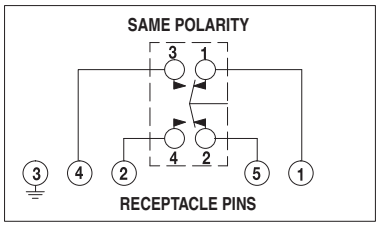


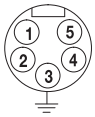


**PIN/WIRE CODE**
**1= White**
**2= Red**
**3= Green**
**4= Orange**
**5= Black**

**PRESSURE: CIRCUIT 1-2 (PINS 1&5)**
**OPENS ON RISING PRESSURE**
**VACUUM: CIRCUIT 3-4 (PINS 4 & 2)**
**OPENS ON INCREASING VACUUM**
**(TOWARD 30 in. HG)**

### Figure 53 - With Pilot Light[(1)]

Suffix X21X9

WITH LED PILOT LIGHT 120V AC ONLY PILOT LIGHT WIRED ACROSS CIRCUIT 1-2 (PINS 1 & 5)

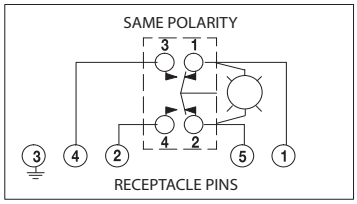


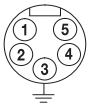


PIN/WIRE CODE
1= White
2= Red
3= Green
4= Orange
5= Black

PRESSURE: CIRCUIT 1-2 (PINS 1&5)
OPENS ON RISING PRESSURE
VACUUM: CIRCUIT 3-4 (PINS 4 & 2)
OPENS ON INCREASING VACUUM
(TOWARD 30 in. HG)

**Suffix X21X15**

**WITH LED PILOT LIGHT 24V DC ONLY PILOT LIGHT WIRED ACROSS CIRCUIT 1-2 (PINS 1 & 5)**

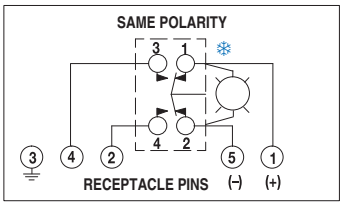


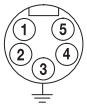


**PIN/WIRE CODE**
**1= White**
**2= Red**
**3= Green**
**4= Orange**
**5= Black**

**PRESSURE: CIRCUIT 1-2 (PINS 1 & 5)**
**OPENS ON RISING PRESSURE**
**VACUUM: CIRCUIT 3-4 (PINS 4 & 2)**
**OPENS ON INCREASING VACUUM**
**(TOWARD 30 in. HG)**

Suffix X22X9‡

WITH LED PILOT LIGHT 120V AC ONLY PILOT LIGHT WIRED ACROSS CIRCUIT 3-4 (PINS 4 & 2)

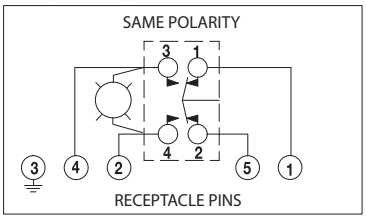


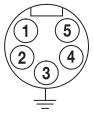


PIN/WIRE CODE
1= White
2= Red
3= Green
4= Orange
5= Black

PRESSURE: CIRCUIT 1-2 (PINS 1 & 5)
OPENS ON RISING PRESSURE
VACUUM: CIRCUIT 3-4 (PINS 4 & 2)
OPENS ON INCREASING VACUUM
(TOWARD 30 in. HG)

**Suffix X22X15 ‡**

**WITH LED PILOT LIGHT 24V DC ONLY PILOT LIGHT WIRED ACROSS CIRCUIT 3–4 (PINS 4 & 2)**

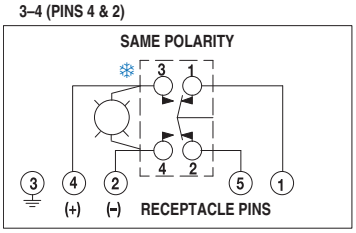


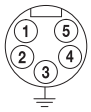


**PIN/WIRE CODE**
**1= White**
**2= Red**
**3= Green**
**4= Orange**
**5= Black**

**PRESSURE: CIRCUIT 1-2 (PINS 1 & 5)**
**OPENS ON RISING PRESSURE**
**VACUUM: CIRCUIT 3-4 (PINS 4 & 2)**
**OPENS ON INCREASING VACUUM**
**(TOWARD 30 in. HG)**

‡ Note pilot light polarity. § X22 not available with 4-circuit pressure controls.

(1) The pilot lights shown in these diagrams are wired across the terminals and in series with the load. Pilot light is OFF when the load is energized, ON when the load is de-energized. For simultaneous energization of the load and pilot light, or other optional wiring configurations, consult your local Rockwell Automation sales office or Allen-Bradley distributor. You can only select ONE wiring configuration per device.

(1) See applicable codes and laws.
(2) The X9 pilot light option is a part of the Modified Industrial Controls product offering, see Rockwell Automation publication CMPNTS-BR002 for more information.

## *Bulletin 836T 5-Pin Mini-Type Receptacle Option Wiring Reference (J9 Wiring)*[1]

### Figure 54 - Without Pilot Light

**Suffix X20**

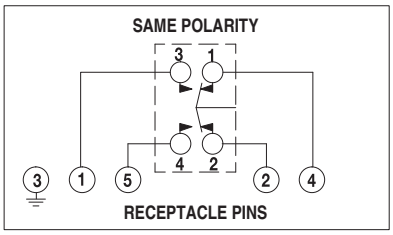


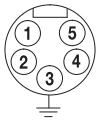


**PIN/WIRE CODE**
**1= White**
**2= Red**
**3= Green**
**4= Orange**
**5= Black**

**PRESSURE: CIRCUIT 1–2 (PINS 4 & 2)**
**OPENS ON RISING PRESSURE**
**VACUUM: CIRCUIT 3–4 (PINS 1 & 5)**
**OPENS ON INCREASING VACUUM**
**(TOWARD 30 in. HG)**

### Figure 55 - With Pilot Light[2]

Suffix X21X9

WITH LED PILOT LIGHT 120V AC ONLY PILOT LIGHT WIRED ACROSS CIRCUIT 1-2 (PINS 1 & 5)

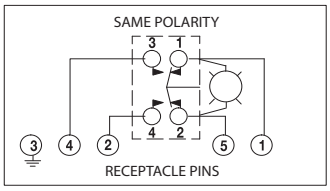


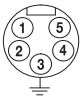


PIN/WIRE CODE
1= White
2= Red
3= Green
4= Orange
5= Black

PRESSURE: CIRCUIT 1-2 (PINS 1&5)
OPENS ON RISING PRESSURE
VACUUM: CIRCUIT 3-4 (PINS 4 & 2)
OPENS ON INCREASING VACUUM
(TOWARD 30 in. HG)

**Suffix X21X15**

**WITH LED PILOT LIGHT 24V DC ONLY PILOT LIGHT WIRED ACROSS CIRCUIT 1-2 (PINS 1 & 5)**

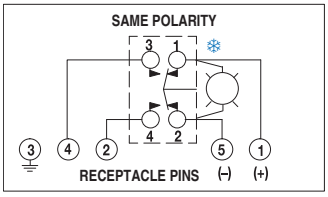


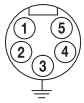


**PIN/WIRE CODE**
**1= White**
**2= Red**
**3= Green**
**4= Orange**
**5= Black**

**PRESSURE: CIRCUIT 1-2 (PINS 1 & 5)**
**OPENS ON RISING PRESSURE**
**VACUUM: CIRCUIT 3-4 (PINS 4 & 2)**
**OPENS ON INCREASING VACUUM**
**(TOWARD 30 in. HG)**

Suffix X22X9‡

WITH LED PILOT LIGHT 120V AC ONLY PILOT LIGHT WIRED ACROSS CIRCUIT 3-4 (PINS 4 & 2)

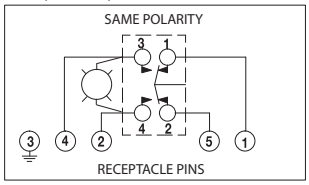

PIN/WIRE CODE
1= White
2= Red
3= Green
4= Orange
5= Black

PRESSURE: CIRCUIT 1-2 (PINS 1 & 5)
OPENS ON RISING PRESSURE
VACUUM: CIRCUIT 3-4 (PINS 4 & 2)
OPENS ON INCREASING VACUUM
(TOWARD 30 in. HG)

**Suffix X22X15 ‡**

**WITH LED PILOT LIGHT 24V DC ONLY PILOT LIGHT WIRED ACROSS CIRCUIT 3–4 (PINS 4 & 2)**

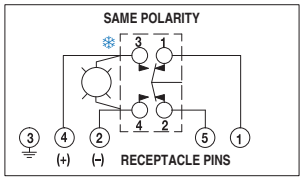

**PIN/WIRE CODE**
**1= White**
**2= Red**
**3= Green**
**4= Orange**
**5= Black**

**PRESSURE: CIRCUIT 1-2 (PINS 1 & 5)**
**OPENS ON RISING PRESSURE**
**VACUUM: CIRCUIT 3-4 (PINS 4 & 2)**
**OPENS ON INCREASING VACUUM**
**(TOWARD 30 in. HG)**

‡ Note pilot light polarity.
§ X22 not available with 4-circuit pressure controls.

(1) See applicable codes and laws
(2) The pilot lights shown in these diagrams are wired across the terminals and in series with the load. Pilot light is OFF when the load is energized, ON when the load is de-energized. For simultaneous energization of the load and pilot light, or other optional wiring configurations, consult your local Rockwell Automation sales office or Allen-Bradley distributor. You can only select ONE wiring configuration per device.

*Bulletin 836T 5-Pin Mini-Type Receptacle Option Wiring Reference*[1]

**Figure 56 - With Pilot Light**[2]

Suffix X81X9

WITH LED LIGHT 120V AC ONLY RATED
600V 8 AMPS

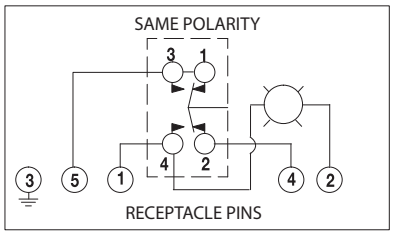


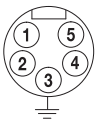


PIN/WIRE CODE
1= White
2= Red
3= Green
4= Orange
5= Black

PRESSURE: CIRCUIT 1–2 (PINS 5 & 4)
OPENS ON RISING PRESSURE
VACUUM: CIRCUIT 3–4 (PINS 5 & 1)
OPENS ON INCREASING VACUUM
(TOWARD 30 in. HG)

**Suffix X81X15**

**WITH LED PILOT LIGHT 24V DC ONLY**
**RATED 600V 8 AMPS**

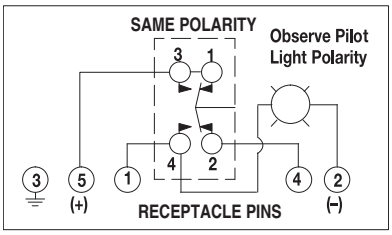


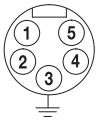


**PIN/WIRE CODE**
**1= White**
**2= Red**
**3= Green**
**4= Orange**
**5= Black**

**PRESSURE: CIRCUIT 1–2 (PINS 5 & 4)**
**OPENS ON RISING PRESSURE**
**VACUUM: CIRCUIT 3–4 (PINS 5 & 1)**
**OPENS ON INCREASING VACUUM**
**(TOWARD 30 in. HG)**

**IMPORTANT** Bulletin 836T Suffix "X81" Wiring — load and pilot light simultaneously energize when contacts displace (contact terminals 3 and 4 close) at a predetermined pressure setting.

*Bulletin 836T 4-Pin Micro-Type Receptacle Option Wiring Reference*[1]

**Figure 57 - Without Pilot Light**

**Suffix X136**

**4-PIN MICRO-TYPE RECEPTACLE VERSION**
**RATED 250V 4 AMPS**

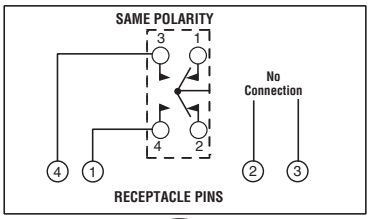


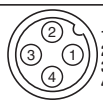


**PIN/WIRE CODE**
**1 = BROWN**
**2 = WHITE (REMOVED)**
**3 = BLUE (REMOVED)**
**4 = BLACK**

**PRESSURE: CIRCUIT 3-4 (PINS 1 & 4)**
**CLOSES ON RISING PRESSURE**
**VACUUM: CIRCUIT 1-2**
**CLOSES ON INCREASING VACUUM**
**(TOWARD 30" HG)**

(1) See applicable codes and laws.
(2) The X9 pilot light option is a part of the Modified Industrial Controls product offering, see Rockwell Automation publication CMPNTS-BR002 for more information.

## Figure 58 - With Pilot Light[1]

**Suffix X130X15**

**4-PIN MICRO-TYPE RECEPTACLE VERSION**
**RATED 250V 4 AMPS**
**WITH LED PILOT LIGHT 24V DC ONLY**

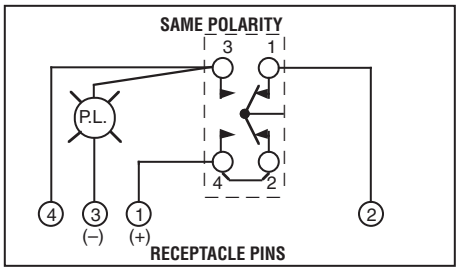


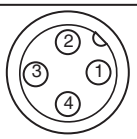


**PIN/WIRE CODE**
**1 = BROWN**
**2 = WHITE**
**3 = BLUE**
**4 = BLACK**

**PRESSURE: CIRCUIT 3-4 (PINS 1 & 4)**
**CLOSES ON RISING PRESSURE**
**VACUUM: CIRCUIT 1-2**
**CLOSES ON INCREASING VACUUM**
**(TOWARD 30" HG.)**

**Suffix X135X15**

**4-PIN MICRO-TYPE RECEPTACLE VERSION**
**RATED 250V 4 AMPS**
**WITH LED PILOT LIGHT 24 VDC ONLY**

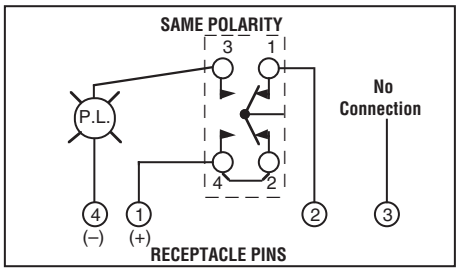


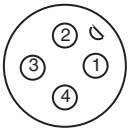


**PIN/WIRE CODE**
**1 = BROWN**
**2 = WHITE**
**3 = BLUE (REMOVED)**
**4 = BLACK**

**PRESSURE: CIRCUIT 3-4 (PINS 1 & 4)**
**CLOSES ON RISING PRESSURE**
**VACUUM: CIRCUIT 1-2**
**CLOSES ON INCREASING VACUUM**
**(TOWARD 30" HG.)**

**Suffix X137X15, X137X18**

**4-PIN MICRO-TYPE RECEPTACLE VERSION RATED**
**250V 4 AMPS**
**WITH LED PILOT LIGHT 24 VDC ONLY**

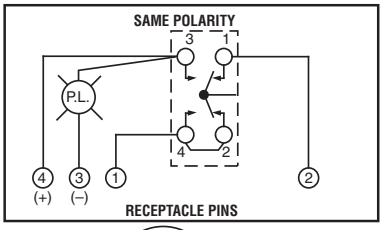


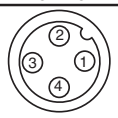


**PIN/WIRE CODE**
**1 = BROWN**
**2 = WHITE**
**3 = BLUE**
**4 = BLACK**

**PRESSURE: CIRCUIT 3-4 (PINS 1 & 4)**
**CLOSES ON RISING PRESSURE**
**VACUUM: CIRCUIT 1-2**
**CLOSES ON INCREASING VACUUM**
**(TOWARD 30" HG.)**

**Suffix X139X15**

**4-PIN MICRO-TYPE RECEPTACLE VERSION RATED**
**250V 4 AMPS**
**WITH LED PILOT LIGHT 24 VDC ONLY**
**WITH 10 kΩ RESISTOR, 4-CIRCUIT APPLICATIONS**

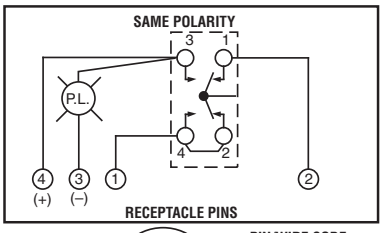


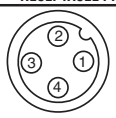


**PIN/WIRE CODE**
**1 = BROWN**
**2 = WHITE**
**3 = BLUE**
**4 = BLACK**

**PRESSURE: CIRCUIT 3-4 (PINS 1 & 4)**
**CLOSES ON RISING PRESSURE**
**VACUUM: CIRCUIT 1-2**
**CLOSES ON INCREASING VACUUM**
**(TOWARD 30" HG.)**

‡ Note pilot light polarity.
§ X22 not available with 4-circuit pressure controls.

(1) The pilot lights shown in these diagrams are wired across the terminals and in series with the load. Pilot light is OFF when the load is energized, ON when the load is de-energized. For simultaneous energization of the load and pilot light, or other optional wiring configurations, consult your local Rockwell Automation sales office or Allen-Bradley distributor. You can only select ONE wiring configuration per device.

## *Bulletin 836T 5-Pin Micro-Type Receptacle Option Wiring Reference*[1]

### Figure 59 - With Pilot Light[2]

**Suffix X145X9 (120V AC), X145X15 (24V DC), X145X18 (24V DC)**

**5-PIN MICRO-TYPE RECEPTACLE VERSION**
**RATED 300V 3 AMPS**
**WITH LED PILOT LIGHT 24VDC ONLY**

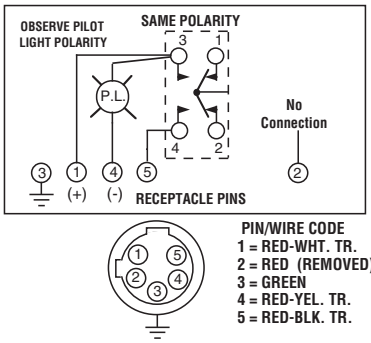





**PIN/WIRE CODE**
**1 = RED-WHT. TR.**
**2 = RED (REMOVED)**
**3 = GREEN**
**4 = RED-YEL. TR.**
**5 = RED-BLK. TR.**

**PRESSURE: CIRCUIT 3-4 (PINS 1&5)**
**CLOSES ON RISING PRESSURE**
**VACUUM: CIRCUIT 1-2**
**CLOSES ON INCREASING VACUUM**
**(TOWARD 30" HG.)**

Suffix X181X9, X181X15, X181X18

5-PIN MICRO-TYPE RECEPTACLE VERSION
RATED 300V 3 AMPS
WITH LED PILOT LIGHT 120VAC ONLY

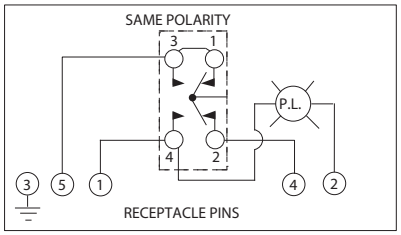


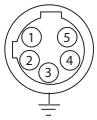


PIN/WIRE CODE
1 = RED-WHITE TR.
2 = RED
3 = GREEN
4 = RED-YEL. TR.
5 = RED-BLACK TR.

PRESSURE: CIRCUIT 1-2 (PINS 5 & 4)
OPENS ON RISING PRESSURE
VACUUM: CIRCUIT 3-4 (PINS 5 & 1)
OPENS ON INCREASING VACUUM
(TOWARD 30" HG.)

‡ Note pilot light polarity.
§ X22 not available with 4-circuit pressure controls.

(1) See applicable codes and laws.

(2) The pilot lights shown in these diagrams are wired across the terminals and in series with the load. Pilot light is OFF when the load is energized, ON when the load is de-energized. For simultaneous energization of the load and pilot light, or other optional wiring configurations, consult your local Rockwell Automation sales office or Allen-Bradley distributor. You can only select ONE wiring configuration per device.

## Approximate Dimensions and Shipping Weights

Dimensions in inches (millimeters). Dimensions are not intended to be used for manufacturing purposes.

**Figure 60 - Type 4 & 13 (Bellows)**

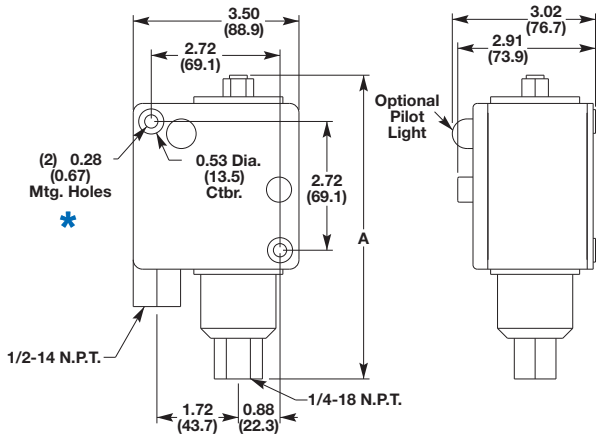


Approximate Shipping Weight 3-1/2 lbs. (1.6 kg)

**Figure 61 - Type 4 & 13 Pressure Difference Control Operator**

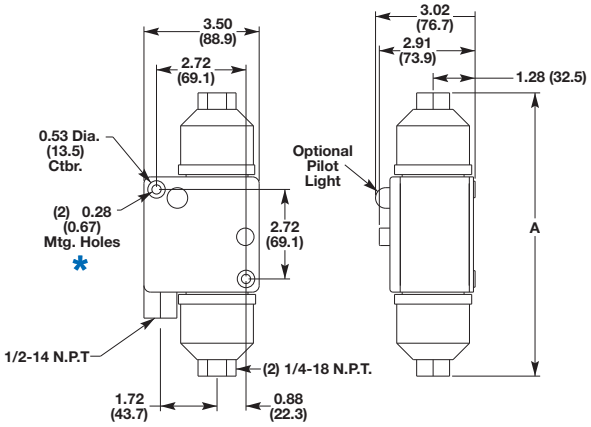


Approximate Shipping Weight 4 lbs. (1.8 kg)

| Cat. No. | A Dimension |
|---|---|
| 836T-T251J | 6.65 (169) |
| 836T-T260J | |
| 836T-T252J | 6.41(163) |
| 836T-T253J | |
| 836T-T261J | |
| 836T-T254J | 6.95 (176) |
| 836T-T255J | |
| 836T-T256J | 7.09 (180) |
| 836T-T262J | 7.33 (186) |
| 836T-T263J | 7.25 (184) |
| 836T-D450J | 8.60 (218) |
| 836T-D451J | 8.14 (207) |
| 836T-D452J | |
| 836T-D453J | 9.5 (241) |
| 836T-D460J | 8.60 (218) |
| 836T-T252J | 8.5 (216) |
| 836T-D463J | 10.06 (256) |

Dimensions in inches (millimeters). Dimensions are not intended to be used for manufacturing purposes.

**Figure 62 - Type 4 & 13 (Piston)**

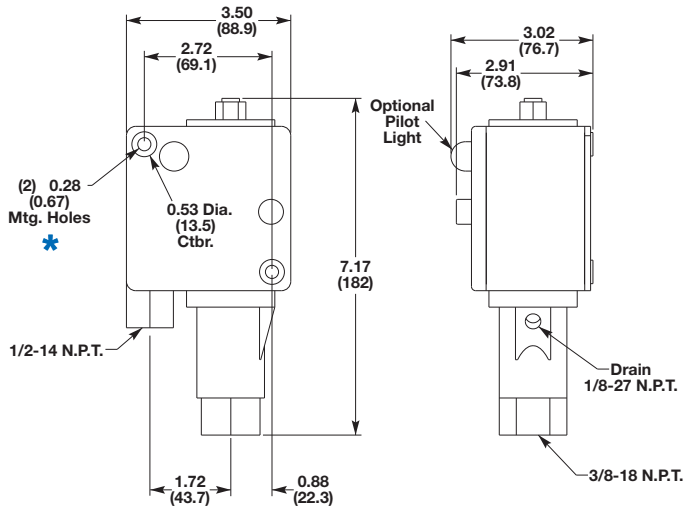


Approximate Shipping Weight 4.5 lbs. (2.0 kg)

**Figure 63 - Type 4 & 13 and 7 & 9 Bellows and Piston Type(1)**

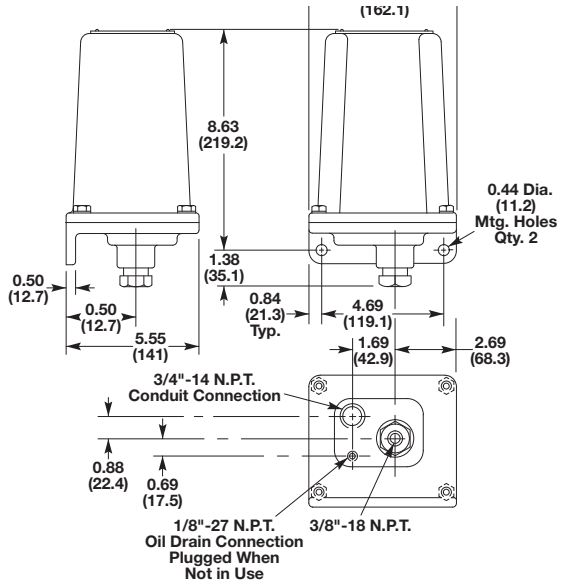


Approximate Shipping Weight 10 lbs. (4.5 kg)

(1) Does not include Dual Bellows Devices

* (2) mounting screws are required: 3/16 x 20 x 2 in. Counter bore depth is 1-1/8 in. Overall depth of mtg hole (front to back) is 2-1/4 in.

| Cat. No. | |
|---|---|
| 836T-T300J | 836T-T350J |
| | 836T-T351J |
| 836T-T301J | 836T-T352J |
| 836T-T302J | 836T-T353J |
| 836T-T303J | 836T-T400J |

## 837 Mechanical Temperature Controls

- Operating ranges from -60...+570 °F
- Adjustable range and differential
- Remote bulb sensing or direct immersion types
- Stainless steel bulb, capillary, and armor available
- Variety of contact blocks available
- Open Type, Type 1, Type 4 & 13, Type 4X, and Type 7 & 9 and 4 & 13 combination enclosures

**Figure 64 - Bulletin 837 Bulb and Capillary Type without Enclosure**

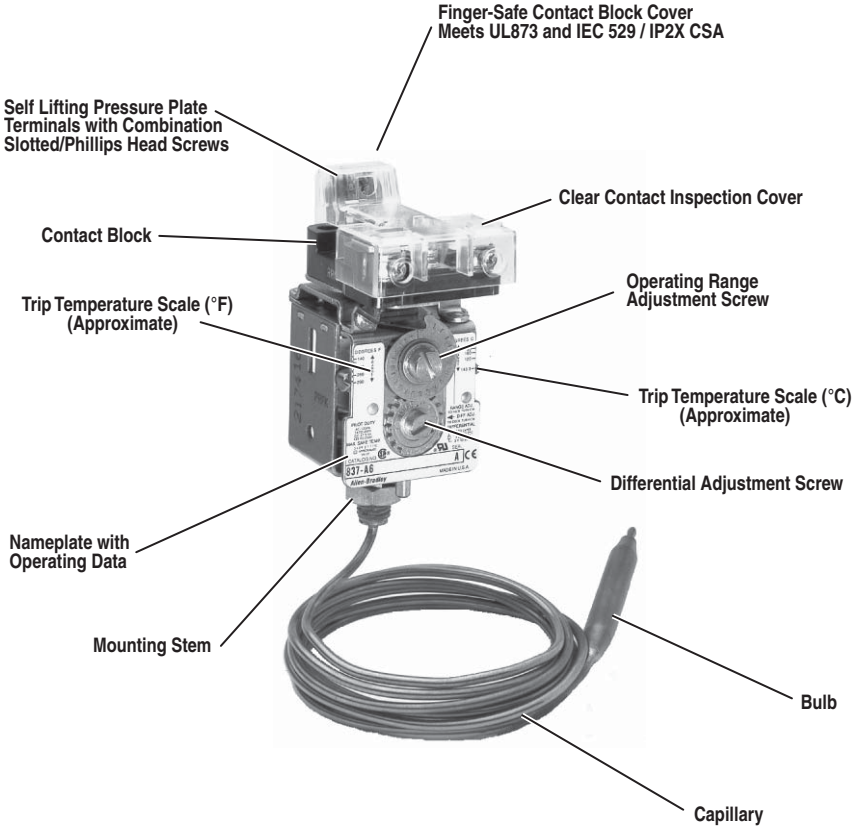


## Description

Bulletin 837 Temperature Controls are heavy-duty control circuit devices that are used in industrial applications where the temperature must be maintained within preset limits. These devices use a vapor pressure technology to sense changes in temperature. The pressure change is transmitted to the bellows through a bulb and capillary tube. Pressure in the system changes in proportion to the temperature of the bulb. Vapor pressure technology provides excellent repeat accuracy and exceptionally long life. Bulletin 837 Temperature Controls are designed for long life and heavy-duty operation. Standard controls have precision snap action silver contacts, and are offered in three different styles. All styles make use of bulbs and capillaries that are filled with a temperature-responsive liquid for detecting temperature changes. The controls are available in a wide variety of enclosures. There are many options and modifications available to meet most application requirements.

## Applications

- Ovens
- Refrigeration units
- Machine coolants
- Bearing temperature
- Die temperature
- Water freeze protection

## Product Overview

| Photo | Description |
|---|---|
| **Style A —Remote Bulb and Capillary** | |
| | **Copper alloy bulb and capillary**<br>• Adjustable operating range from –60…+360 °F<br>• Bulb can be located 3, 6, 12, 20, or 30 feet from the control (standard capillary lengths)<br>• Adjustable range and differential<br>• Enclosure types: Open Type, Type 1, 4 & 13, and combined 7 & 9 and 4 & 13<br>• Maximum temperature up to 400 °F<br>**Stainless steel bulb and capillary**<br>• Adjustable operating range from 260…570 °F<br>• Bulb and capillary resist oxide due to high temperature<br>• Bulb can be located 3, 6, 12, 20, or 30 feet from the control (standard capillary lengths)<br>• Adjustable range and differential<br>• Enclosure types: Open Type, Type 1, 4 & 13, 4X, and combined 7 & 9 and 4 & 13<br>• Maximum temperature up to 600 °F |
| **Style H — Direct Horizontal Immersion** | |
| | **Brass bulb**<br>• Adjustable operating range from 25…290 °F<br>• Direct horizontal mount on equipment<br>• Enclosure types: Open Type, and Type 1<br>• Maximum temperature up to 340 °F<br>• Maximum pressure is 300 psi without thermostat well |
| **Style V — Direct Vertical Immersion** | |
| | **Brass bulb**<br>• Adjustable operating range from 25…290 °F<br>• Direct vertical mount on equipment<br>• Enclosure types: Open Type, Type 1 and 4 & 13<br>• Maximum temperature up to 340 °F<br>• Maximum pressure is 300 psi without thermostat well |

| Standards Compliance |
|---|
| • UL 873<br>• UL 1203 (Haz. Loc.)<br>• CSA 22.2 No. 14<br>• NEMA ICS-2<br>• IEC 529/IP2X |
| **Certifications** |
| |

| File and Guide Numbers | | | |
|---|---|---|---|
| UL | | CSA | |
| File Number | Guide Number | File Number | Class |
| E65556<br>E64971 (Haz.Loc.) (1) | XAPX<br>XBDV | LR1234<br>LR11924 | 1222-01<br>3218-02 |

(1) Hazardous Location enclosed devices are not CE-compliant.

## Technical Terms

| Term | Definition |
|---|---|
| Adjustable operating range | Total span within which the contacts can be adjusted to trip and reset. |
| Trip setting | Higher temperature setting when the contacts transfer from their normal state to a changed state. |
| Reset setting | Lower temperature setting when the contacts return to their normal state. |
| Adjustable differential | Difference between the trip and reset values. |
| Minimum differential | When the differential is set to the lowest temperature difference between trip and reset. |
| Maximum differential | When the differential is set to the highest temperature difference between trip and reset. |
| Maximum temperature | The maximum temperature that can be applied to the bulb. This includes temperature override that can occur in the system. This rating must NOT be exceeded. |
| Operating range adjustment screw | This screw is used to adjust the trip setting by varying the force of the main spring. |
| Differential adjustment screw | This screw is used to adjust reset setting by varying the force of the differential blade spring. |
| Contact configuration | There are many types of contact configurations available. Bulletin 837 Temperature Controls are offered in a wide variety of contact configurations for both automatic operation and manual reset. See Contact Blocks — Trip temperature-indicating scales are supplied on controls with standard contact block. |
| Mounting | There are two methods of mounting temperature controls: remote or direct immersion. |
| Remote Method | A bulb and capillary system is used for mounting the control away from the machine or process. |
| Direct Immersion | The control is mounted directly on the machine or process. Rockwell Automation offers both horizontal and vertical immersion types. |
| Conversion factor | Temperatures that are given in Fahrenheit can be converted to Celsius using this equation: °C = 0.56 (°F –32°) |
| Temperatures that are given in Celsius can be converted to Fahrenheit using this equation: °F = (1.8 x °C) +32° | |

**Figure 65 - Graphics to illustrate technical terms**

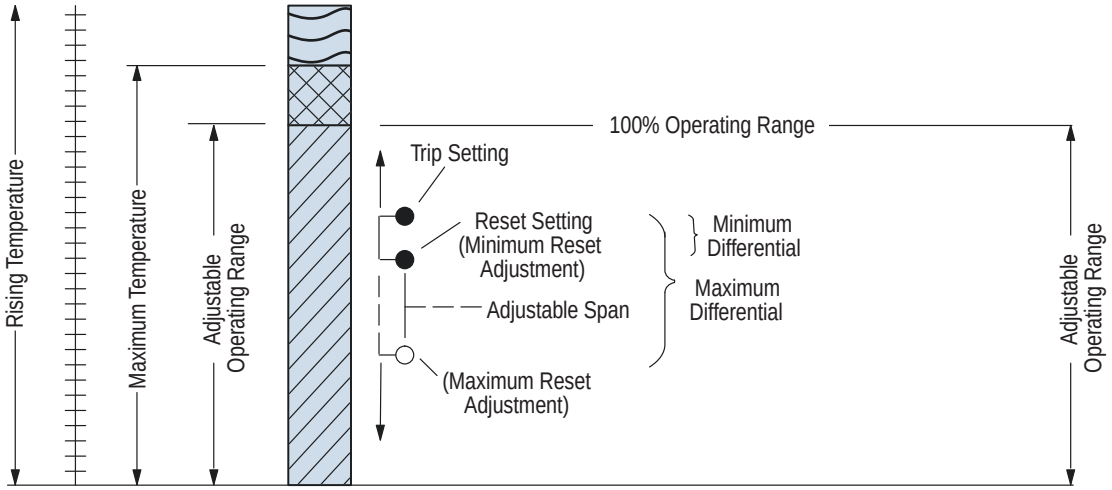

## Operation

Bulletin 837 Temperature Controls are designed to open or close electrical circuits in response to changes in temperature. Figure 2 is a simplified drawing of a temperature control. The bellows, bulb, and capillary are filled with a temperature-responsive liquid. The vapor pressure of the liquid increases as the temperature of the bulb increases. System temperature is converted to pressure through the bulb and capillary, which are connected to the control at the mounting stem. Pressure that is applied to the actuator changes in proportion to the temperature of the bulb. As temperature rises, the bellows exert force on the main spring. When the threshold force of the main spring is overcome, it transfers the motion to the contact block and actuates the contacts — this is referred to as the trip setting. As temperature decreases, the main spring will retract. When the threshold force on the differential blade spring is overcome, the contacts will return to their normal state —this is referred to as reset setting. Varying the force of the main spring (by turning the operating range adjustment screw) determines when the contacts will trip. Varying the force on the secondary differential blade spring (by turning the differential adjustment screw) determines when the contacts will reset. Setting trip and reset determines control operation.

**Figure 66 - Basic Mechanical Structure**

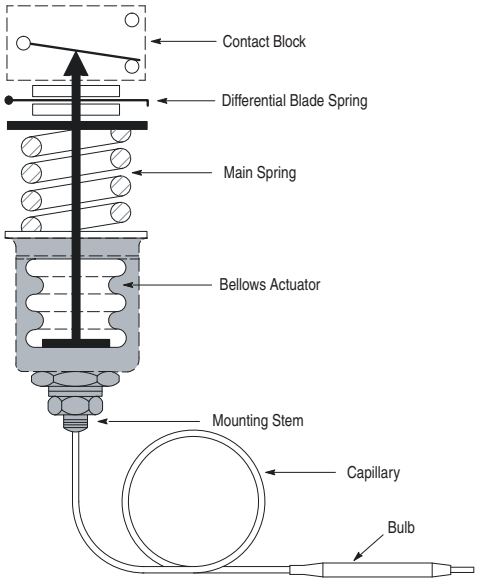


### *Applications for Control*

Temperature controls can be used to either control or monitor a machine or process. Figure 67 shows a typical control application. Here, temperature is controlled within predetermined high and low values. Figure 68 shows a typical monitoring application. Here, temperature is monitored between a high and low value, signaling when a preset limit has been exceeded.

**Figure 67 - Typical Control Application**

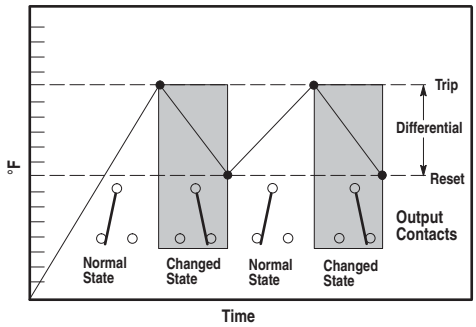


**Figure 68 - Typical Monitoring Application**

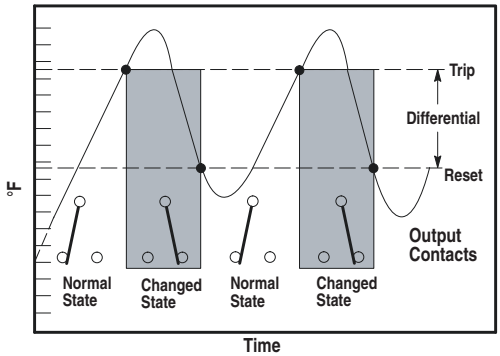

### *Control Settings*

Allen-Bradley Temperature Controls are designed for ease of setting to help minimize installation time. Standard controls that are shipped from the factory are set at the maximum operating range and minimum differential. By following this simple two-step process, the control can be set to the specific requirements for each application. See Figure 69.

1. Adjust trip setting

   The trip setting is achieved by turning the operating range adjustment screw. Turn the screw counterclockwise to lower the trip setting or clockwise to raise the trip setting. The approximate trip setting is shown on the indicating scale.

2. Adjust reset setting

   The reset setting is achieved by turning the differential adjustment screw counterclockwise to increase the differential or clockwise to decrease the differential.

**Figure 69 - Trip and reset adjustment**

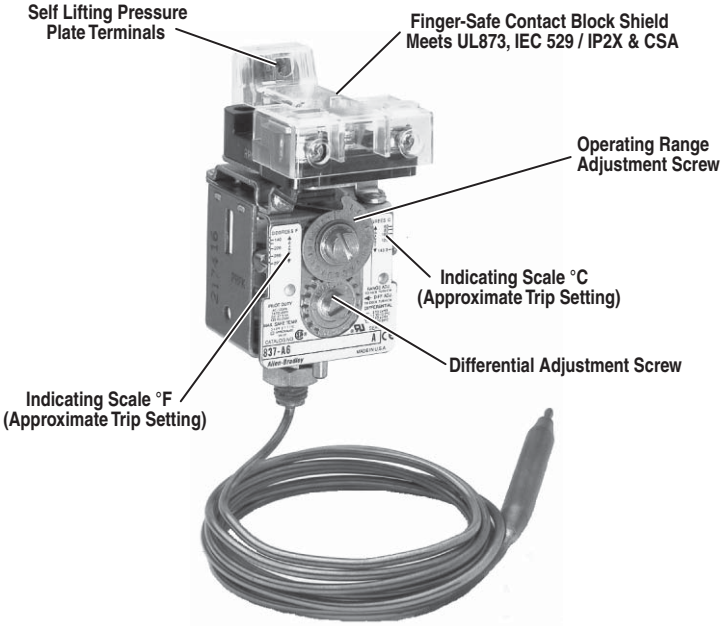


### *Thermostat Wells*

Thermostat wells are sealed tubes on one end with threads on the other that allow mounting directly into a system. Thermostat wells protect the bulbs and allow installing or removing controls for calibration without discharging or draining an entire system. The bulb of a temperature control is inserted into the well that is secured with a locking nut for standard bulb and capillary devices. Bulbs for armored capillary devices are secured with a sleeve nut and set screw to help prevent the armor from sliding back exposing the capillary. The bulbs of direct immersion devices are secured with a set screw that is also used to mount the control. Thermostat wells are rated for 1000 psi at 600 °F. Thermostat wells used when mounting direct horizontal immersion controls will allow mounting the control in a confined space. These devices otherwise require an 11 in. swing diameter to secure the bulb into the system.

### *Packing Glands*

Packing glands are used when the application requires the bulb to be located deeper into a process than would be possible with a thermostat well. The glands provide a seal at any desired length along a standard capillary device. The bulb must be supported to resist damage from flow or turbulence within the system. The capillary of armored capillary devices can only be sealed at the small exposed section of capillary located at the

bulb. Packing glands are not intended to seal around the armor. They are designed to withstand sealing pressures up to 50 psi. The packing gland cannot be assembled into a thermostat well.

**Figure 70 - Thermostat Wells**

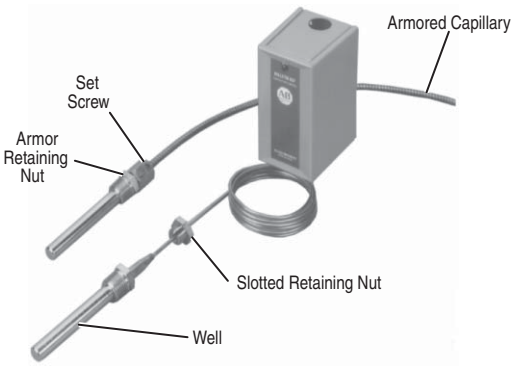


**Figure 71 - Packing Glands**

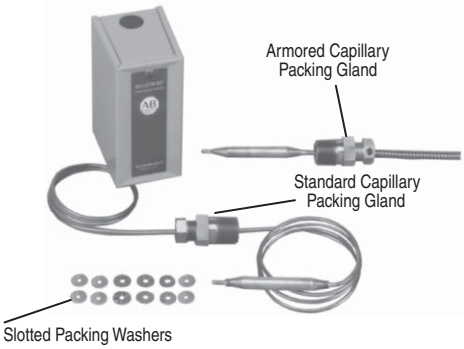


### *Bulb and Capillaries*

Copper bulbs and capillaries are supplied for lower temperature ranges. Stainless steel is used for temperatures above 260 °F. Stainless steel is also available on lower ranges for more corrosive applications. Capillary lengths of 3, 6, 12, 20, and 30 feet are available for all styles of temperature control devices.

### *Armor*

Bronze or stainless steel armor is available for added protection of the capillary. See Modifications on Tamper-Resistant Adjustment for ordering instructions.

### *Capillary Bending Radius*

| Material | Bending Radius |
|---|---|
| Copper and Stainless Steel | 0.5 in. (12.7 mm) minimum |
| with Bronze and Stainless Steel Armor | 2 in. (50.8 mm) minimum |

### *Direct Immersion*

Horizontal and vertical immersion devices are used when the controls are required to be mounted directly on the machine or in a process.

### *Standard Contact*[1]

### *Contact Operation*

Contact blocks are single-pole, double-throw and can be wired to open or close on increasing or decreasing temperature.

### *Non-Inductive Ratings*

5 A, 240V

3 A, 600V

### *Control Circuit Ratings*

AC: 125 VA, 24...600V

DC: 57.5 VA, 115...230V

(1) NEMA does not rate contacts to switch low-voltage and current. Bulletin 837 Styles A, H, and V Temperature Controls are supplied with silver contacts. The devices are designed to deliver high force snap action to the contacts. This provides exceptional contact fidelity at 24V DC I/O card current level entry when the integrity of the enclosure is maintained.

**Figure 72 - Standard Contact Wiring Configuration**

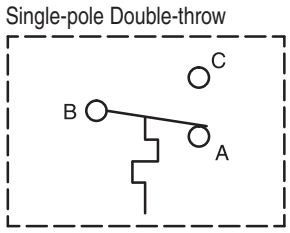


### *Repeat Accuracy*

The vapor pressure technology used in Bulletin 837 controls to sense temperature provides an exceptionally long operating life. High quality chemicals and rigid control during manufacturing provide a typical repeat accuracy of ±2 °F. Repeat accuracy is based on percent of maximum range, evaluated from test data and calculated using the formula per ICS 2-225 standards.

### *Special Controls*

A large number of unlisted catalog modifications and complete devices are available for specific and OEM applications. Special controls and modification service is available to meet many applications unique to the OEM market.

Please consult your local Rockwell Automation sales office or Allen-Bradley distributor for assistance with specific modified controls and accessories.

### *Temperature Range*

The temperature range for the mechanism at +32 °F (0 °C) or below is based on the absence of freezing moisture, water or other fluids that can solidify and impede the operation of the control. Temperature ratings are as follows:

**Temperature Ratings**

| | |
|---|---|
| Operating | –22… +150 °F(–30…+66 °C) |
| Storage | –22…+200 °F (–30…+93 °C) |

### *Factory-Set Temperature Controls*

Rockwell Automation will factory set temperature controls to customer-specified values if a Cat. No. 837-_C device is ordered. Unspecified temperature controls (cat. nos. without the "C" suffix) shipped from the factory are set at the maximum operating range and minimum differential. See Factory Options, Factory Options.

### *Application Note*

When the ambient temperature surrounding the mechanism of the temperature control approaches 30 °F (-1.1 °C) on either side of the setting, a cross-ambient type control should be used. This will protect against false temperature-sensing, as the bellows within the mechanism can otherwise respond to changes in temperature. Cat. Nos. 837-A3 and 837-A4 bulb and capillary Types, all 837-V direct vertical immersion, and all 837-H direct horizontal immersion devices are cross-ambient.

When the bulb of cross-ambient bulb and capillary controls 837-A3 and 837-A4 is to be mounted vertically, the capillary end of the bulb should always be positioned higher than the termination end of the bulb.

When mounting the bulb horizontally, the word “TOP” stamped near the capillary of the bulb should be positioned upward toward the 12 o' clock position. The capillary end of the bulb should never be higher than the termination end of the bulb. The direct vertical immersion devices in the catalog series 837-V are conventionally mounted with the bulb downward, below the mechanism.

They must not be mounted with the bulb up. Since the horizontal immersion device is not available in a Type 4 & 13 enclosure, the corresponding vertical immersion device can be used. When the vertical immersion device is mounted horizontally, the word “TOP” stamped on the mounting thread “hex” should point upward toward the 12 o' clock position.

The direct horizontal Immersion devices, in catalog series 837-H should always be mounted with the mechanism above the bulb. The word “TOP” stamped on the mounting thread “hex” should point upward toward the 12 o' clock position. Cat. No. 837-A2 is not cross-ambient and should not be used if the ambient temperature approaches or crosses over the setpoint as false temperature can occur.

Consult your local Rockwell Automation sales office or Allen-Bradley distributor for assistance on special applications.

## Ordering Information

When ordering Bulletin 837 Temperature Controls, consider the following:

- Device Style
- Maximum Temperature
- Adjustable Operating Range
- Mounting — Direct or Remote
- Adjustable Differential

| 1. Select Basic Device | 2. Modifications | 3. Accessories | 4. Factory Options: |
|---|---|---|---|
| Select a catalog number for the Float Switch.See Product Selection- Style A — Remote Bulb and Capillary on page 55 | If necessary, add modification suffix to catalog.See Modifications on page 58 | If necessary, select appropriate accessories as separate catalog numbers.See Accessories on page 59 | **Factory Set Temperature Controls** See Factory-Set Temperature Controls on page 53 |

## Catalog Number Explanation

| 837 | – | A | 4 | A | X | 5 | 03 | X171 | C |
|---|---|---|---|---|---|---|---|---|---|
| | | a | **Temperature Settings** See Product Selection on pages 55 -57 for Temperature Specifications | b | | c | **Capillary Length** Measure in feet, from end of bellows stem to end of bulb tip. **03** = 3 ft **06** = 6 ft **12** = 12 ft **20** = 20 ft **30** = 30 ft | **Modifications** SeeModifications on page 58 Add Suffix codes in descending order whenever possible. | d |

**a**

**Style of Device**

| Code | Description |
|---|---|
| A | Remote bulb and capillary |
| H | Direct horizontal immersion |
| V | Direct vertical immersion |

**b**

**Enclosure Type**

| Code | Description |
|---|---|
| A | Type 1 |
| E | Type 7 & 9, 4 & 13 |
| J | Type 4 & 13, Metallic |
| S | Type 4X |
| None | Without Enclosure |

**c**

**Type of Bulb and Capillary**

| Code | Description |
|---|---|
| 5 | Copper bulb and capillary |
| 6 | Stainless steel bulb and capillary (required for Type 4X) |
| 7 | Copper capillary and bulb bronze armor |
| 9 | Stainless steel bulb and capillary and armor (required for Type 4X) |

**d**

**Modifications**

| Code | Description |
|---|---|
| Blank | Max. range/ min. differential |
| C | Customer specified trip/reset setting(1) |

(1) The requested trip/reset setting must be within the adjustable operating and differential ranges for the pre-configured product, refer to Product Selection.

## Product Selection- Style A — Remote Bulb and Capillary

**Figure 73 - Style A — Type 1 with external manual reset option**

**Figure 74 - Style A — Type 7 & 9 and 4 & 13 combined**

Standard temperature controls shipped from the factory are set at the maximum operating range and minimum differential. For more information on standard pressure control settings and customer-specified pressure control settings, consult your local Rockwell Automation sales office or Allen-Bradley distributor.

| Temperature Specifications | | | | | Enclosure Type | | | | |
|---|---|---|---|---|---|---|---|---|---|
| Adjustable Operating Range [°F] | Adjustable Differential [°F] (1) | | | Maximum Temperature [°F] | Bulb Length [in. (mm)] | Open Type (Without Enclosure) | | Type 1 | |
| | Minimum Range | Mid-range | Maximum Range | | | Cat. No. | | Cat. No. | |
| –60…+50 | 6…46 | 2…38 | 2…16 | 250 | 3-3/4 (95) | | 837-A2 | | 837-A2A |
| 25…125 | 4…36 | 2…30 | 2…16 | 160 | 8-1/2 (216) | (2) | 837-A3 | (2) | 837-A3A |
| 80…190 | 14…54 | 7…45 | 3…20 | 240 | 8-1/2 (216) | (2) | 837-A4 | (2) | 837-A4A |
| 130…200 | 5…28 | 5…26 | 3…18 | 240 | 3-3/4 (95) | | 837-A5 | | 837-A5A |
| 140…290 | 13…63 | 7…52 | 3…24 | 340 | 3-3/4 (95) | | 837-A6 | | 837-A6A |
| 200…360 | 8…72 | 4…62 | 3…30 | 400 | 3-3/4 (95) | | 837-A7 | | 837-A7A |
| 260…430 | 9…72 | 5…62 | 3…28 | 470 | 3-3/4 (95) | (3) | 837-A60 | (3) | 837-A60A |
| 310…490 | 10…78 | 5…67 | 3…21 | 520 | 3-3/4 (95) | (3) | 837-A61 | (3) | 837-A61A |
| 380…570 | 12…87 | 5…78 | 4…35 | 600 | 3-3/4 (95) | (3) | 837-A62 | (3) | 837-A62A |

(1) The vapor pressure characteristics of the chemical enter the bellows system do not respond linearly to temperature change from minimum to the maximum range setting of the control. The result is larger differential values at minimum temperature range setting and smaller values at the maximum temperature range setting. Differentials in the table are not constant over the adjustable range of the control. Therefore, the control should be selected based on the setting being at minimum, mid or maximum range. It can be necessary to move up or down in the table to select the most desirable control for the application.

(2) Cross-ambient controls are supplied with 8-1/2" long bulbs. Cross-ambient controls in the ranges of 25°…190 °F require a larger volume of temperature-sensitive chemicals in the bulb than the additive volume contained in the capillary and bellows. For this reason, Bulb and Capillary type cross-ambient controls cannot be supplied with bulbs shorter than 8-1/2".

(3) Supplied with stainless steel bulb and capillary to minimize oxides caused by elevated temperatures.

## Product Selection - Style A — Remote Bulb and Capillary(1)

**Figure 75 - Style A — Type 1 with external manual reset option**

**Figure 76 - Style A — Type 7 & 9 and 4 & 13 combined**

Standard temperature controls shipped from the factory are set at the maximum operating range and minimum differential. For more information on standard pressure control settings and customer-specified pressure control settings, consult your local Rockwell Automation sales office or Allen-Bradley distributor.

| Temperature Specifications | | | | | Enclosure Type | | | | |
|---|---|---|---|---|---|---|---|---|---|
| Adjustable Operating Range [°F] | Adjustable Differential [°F]‡ | | | Maximum Temperature [°F] | Bulb Length [in. (mm)] | Type 4 & 13 | | Type 7 & 9 and 4 & 13(3) | |
| | Minimum Range | Mid-range | Maximum Range | | | Cat. No. | | Cat. No. | |
| –60…+50 | 6…46 | 2…38 | 2…16 | 250 | 3-3/4 (95) | 837-A2J | | 837-A2E | |
| 25…125 | 4…36 | 2…30 | 2…16 | 160 | 8-1/2 (216) | (1) | 837-A3J | (1) | 837-A3E |
| 80…190 | 14…54 | 7…45 | 3…20 | 240 | 8-1/2 (216) | (1) | 837-A4J | (1) | 837-A4E |
| 130…200 | 5…28 | 5…26 | 3…18 | 240 | 3-3/4 (95) | 837-A5J | | 837-A5E | |
| 140…290 | 13…63 | 7…52 | 3…24 | 340 | 3-3/4 (95) | 837-A6J | | 837-A6E | |
| 200…360 | 8…72 | 4…62 | 3…30 | 400 | 3-3/4 (95) | 837-A7J | | 837-A7E | |
| 260…430 | 9…72 | 5…62 | 3…28 | 470 | 3-3/4 (95) | (2) | 837-A60J | (2) | 837-A60E |
| 310…490 | 10…78 | 5…67 | 3…21 | 520 | 3-3/4 (95) | (2) | 837-A61J | (2) | 837-A61E |
| 380…570 | 12…87 | 5…78 | 4…35 | 600 | 3-3/4 (95) | (2) | 837-A62J | (2) | 837-A62E |

(1) Cross-ambient controls are supplied with 8.5 in. long bulbs. Cross-ambient controls in the ranges of 25…190 °F require a larger volume of temperature-sensitive chemicals in the bulb than the additive volume contained in the capillary and bellows. For this reason, bulb and capillary type cross-ambient controls cannot be supplied with bulbs shorter than 8.5 in..

(2) Supplied with stainless steel bulb and capillary to minimize oxides caused by elevated temperatures.

(3) The combined Type 7 & 9 and 4 & 13 hazardous gas and dust service enclosure is supplied with special gasket and O-ring seal to diminish/exclude moisture, fluids, and dust from entering the enclosure. Enclosures rated 7 & 9 only are not designed to restrict moisture from entering the enclosure, which is common to outdoor service. Enclosure is rated for the following environments:
CLASS I Groups C,D
CLASS II Groups E,F,G
CLASS III

(1) Bulb and capillary controls have a 72 in. long capillary that includes the length of the bulb. Bulbs are 3/8 in. in diameter. Material is copper unless otherwise specified. See Renewal Parts
Special longer length capillaries, generally over 30 feet, will be equipped with longer bulbs depending upon temperature range and chemical fill. Capillary diameter (outside diameter) is 0.125 in.
Minimum differentials that are shown are approximate values. Deviations are negligible for most applications.
The vapor pressure characteristics of the chemical enter the bellows system do not respond linearly to temperature change from minimum to the maximum range setting of the control. The result is larger differential values at minimum temperature range setting and smaller values at the maximum temperature range setting. Differentials in the table are not constant over the adjustable range of the control. Therefore, the control should be selected based on the setting being at minimum, mid or maximum range. It can be necessary to move up or down in the table to select the most desirable control for the application.

## Product Selection, Style H — Direct Horizontal Immersion(1)

**Figure 77 - Style H — Type 1 Direct horizontal immersion shown with external manual reset**

Standard temperature controls shipped from the factory are set at the maximum operating range and minimum differential. For more information on standard pressure control settings and customer-specified pressure control settings, consult your local Rockwell Automation sales office or Allen-Bradley distributor.

| Temperature Specifications | | | | | Enclosure Type (1) | |
|---|---|---|---|---|---|---|
| Adjustable Operating Range [°F] | Adjustable Differential [°F]‡ | | | Maximum Temperature [°F] | Open Type (Without Enclosure) | Type 1 |
| | Minimum Range | Mid-range | Maximum Range | | Cat. No. | Cat. No. |
| 25…125 | 4…36 | 2…30 | 2…16 | 160 | 837-H1 | 837-H1A |
| 110…200 | 8…41 | 6…34 | 3…18 | 240 | 837-H2 | 837-H2A |
| 140…290 | 13…63 | 7…52 | 3…24 | 340 | 837-H3 | 837-H3A |

(1) Direct immersion controls are not available in Combined Type 7 & 9 and 4 & 13 Hazardous Duty enclosures.

## Product Selection, Style V — Direct Vertical Immersion (1)

**Figure 78 - Style V — Type 4 & 13 Direct vertical immersion**

Standard temperature controls shipped from the factory are set at the maximum operating range and minimum differential. For more information on standard pressure control settings and customer-specified pressure control settings, consult your local Rockwell Automation sales office or Allen-Bradley distributor.

| Temperature Specifications | | | | | Enclosure Type (2) | | |
|---|---|---|---|---|---|---|---|
| Adjustable Operating Range [°F] | Adjustable Differential [°F] (1) | | | Maximum Temperature [°F] | Open Type (Without Enclosure) | Type 1 | Type 4 & 13 |
| | Minimum Range | Mid-range | Maximum Range | | Cat. No. | Cat. No. | Cat. No. |
| 25…125 | 4…36 | 2…30 | 2…16 | 160 | 837-V1 | 837-V1A | 837-V1J |
| 110…200 | 8…41 | 6…34 | 3…18 | 240 | 837-V2 | 837-V2A | 837-V2J |
| 140…290 | 13…63 | 7…52 | 3…24 | 340 | 837-V3 | 837-V3A | 837-V3J |

(1) Minimum differentials that are shown are approximate values. Deviations are negligible for most applications.
(2) Direct immersion controls are not available in Combined Type 7 & 9 and 4 & 13 Hazardous Duty enclosures.

(1) The vapor pressure characteristics of the chemical enter the bellows system do not respond linearly to temperature change from minimum to the maximum range setting of the control. The result is larger differential values at minimum temperature range setting and smaller values at the maximum temperature range setting. Differentials in the table are not constant over the adjustable range of the control. Therefore, the control should be selected based on the adjustable operating range and the differential based on the setting being at minimum, mid or maximum range. It can be necessary to move up or down in the table to select the most desirable control for the application.

## Modifications

Modifications are ordered by adding the appropriate modification suffix code to the catalog number of the basic device. Add suffix codes to the catalog number in descending order whenever possible (highest number first).

### *Contact Blocks*

- Trip temperature-indicating scales are supplied on controls with standard contact block.
- Contact blocks are not available for field conversion or replacement.
- NEMA does not rate contacts to switch low voltage and current. Bulletin 837 Styles A, H, and V temperature controls are supplied with silver contacts. The devices are designed to deliver high force snap action to the contacts. This provides exceptional contact fidelity at 24V DC I/O card current level entry when the integrity of the enclosure is maintained.

| Description | Rating | Symbol | Suffix Code |
|---|---|---|---|
| **Standard Contact Block - Automatic Operation** | | | |
| Single-pole, double-throw, snap action. Supplied when a contact block suffix is not added to the catalog number. | Control circuit rating: See Control Circuit Ratings | | – |
| **Contact Blocks - Automatic Operation(1)** | | | |
| Single pole double throw — slow acting contact with no snap action. Contacts close on rise and close on fall with an open circuit between contact closures. | Control circuit rating: AC-125VA, 24…250V | | X171 |
| Single pole single throw, normally open — closes on rise. | 0.5 Hp, 115V AC<br>1 Hp, 230V AC<br>Control circuit rating:<br>AC-125VA, 24…110V<br>AC-345VA, 110…600V<br>DC-57.5VA, 110…250V | | X221 |
| Single pole single throw, normally closed — opens on rise. | | | X231 |
| Single pole single throw, normally open — closes on rise. | 1 Hp, 115V AC<br>1.5 Hp, 230V AC<br>Control circuit rating:<br>AC-600VA, 110…600V<br>DC-57.5VA, 110…250V | | X321 |
| Single pole single throw, normally closed — opens on rise. | | 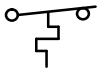 | X331 |
| **External Manual Reset(2) (3) (4)** | | | |
| Single pole single throw, normally open — contacts open at a predetermined setting on fall and remain open until system is restored to normal run conditions, at which time contacts can be manually reset. | Non-inductive:<br>5 A, 240V<br>3 A, 600V<br>Control circuit rating:<br>AC-125VA, 24…600V<br>DC-57.5VA, 115…230V | | X140 |
| Single pole single throw, normally closed — contacts open on rise and remain open until system is restored to normal run conditions, at which time contacts can be manually reset. | | | X150 |
| Single pole double throw, one contact normally closed — contact opens on rise and remains open until system is restored to normal run conditions, at which time contact can be manually reset. A second contact closes when the first contact opens. | | | X15A |

(1) Minimum specified differential value approximately doubles.
(2) Manual reset devices cannot be supplied with an adjustable differential. Differential is approximately three times the minimum published differential of the corresponding adjustable differential control. Not available on Type 4X enclosed devices.
(3) Available only for replacement of complete open type control in an existing Type 1 or 4 & 13 enclosure. Replacement in a Type 7 & 9 enclosure is not available because it would void UL and CSA.
(4) Type 7 & 9 enclosures for manual reset devices are not also rated Type 4 & 13.

*Pilot Lights*

| Modification | Description (1) | Suffix Code |
|---|---|---|
| Light-emitting diode Pilot Light, 120V AC | Contact modified industrial controls team to select light-emitting diode color and to configure catalog number. | — |
| Red light-emitting diode pilot light 24V DC | A high-intensity light-emitting diode 24V DC pilot light is available to meet the requirements of the automotive, machine tool builders, and other industries. The current rating is 22 mA and can be wired for ON or OFF operation. | X15 |

(1) Not available on combined Type 7 & 9 and 4 & 13, Type 4X, and manual reset devices.

## Accessories

Accessories are ordered as separate catalog numbers. Select the required accessories from the accessories table below.

### Angle Mounting Brackets

| Description | Bracket Type | Cat. No. |
|---|---|---|
| For mounting one or two open type Bulletin 836 Style A Pressure Controls or Bulletin 837 Temperature Controls on an enclosure mounting plate. | Single bracket | 836-N11 |
| | Dual mounting bracket | 836-N12 |

### Hardware Kits for Mounting Open Type Controls in Special Enclosures

| Description | Kit Contents | Material | Cat. No. |
|---|---|---|---|
| | Style A Controls | | |
| For mounting open type controls in special enclosures by user. Allows ease of running a capillary external to the enclosure. For use with Type 1 and 4 & 13 enclosures with wall thickness up to 0.25 in. (6.35 mm). | Bulb and capillary with armored capillary | Brass | 837-N17 |

### Thermostat Wells

| Description | | Material | Type of Control | Control Bulb Size [in. (mm)] | Cat. No. |
|---|---|---|---|---|---|
| 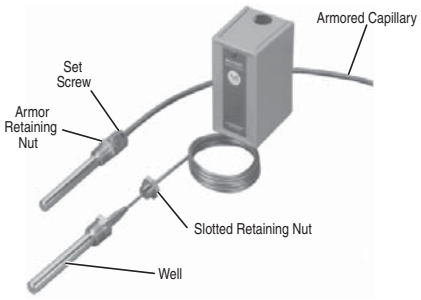 | Thermostat wells are used when inserting the sensing bulb into a pressurized system. This allows removal of the sensing bulb for recalibration or inspection without having to discharge the system (1) | Brass | Remote standard capillary | 3-3/4 (95) | 837-N1 |
| | | | | 8-1/2 (216) | 837-N6 |
| | | | Remote armored capillary | 3-3/4 (95) | 837-N3 |
| | | | | 8-1/2 (216) | 837-N7 |
| | | | Direct immersion | 3-1/2 (89) | 837-N2 |
| | | Type 316 Stainless steel | Remote standard capillary | 3-3/4 (95) | 837-N12 |
| | | | | 8-1/2 (216) | 837-N13 |
| | | | Remote armored capillary | 3-3/4 (95) | 837-N14 |
| | | | | 8-1/2 (216) | 837-N15 |
| | | | Direct immersion | 3-1/2 (89) | 837-N16 |

(1) External pressure rating — 1000 psi at 600 °F maximum.

### Packing Glands

| | Description | Material | Type of Control | Cat. No. |
|---|---|---|---|---|
| | Packing glands form a seal around any desired position of the capillary, allowing any length of capillary to be inserted into the vessel where temperature is to be sensed. (1) | Brass | Remote standard capillary | 837-N5 |
| | | | Remote armored capillary | 837-N4 |

(1) Maximum sealing pressure — 50 psi.

## Renewal Parts

Renewal parts are ordered as separate catalog numbers. See the table below.

### Contact Block Replacement Kit

| Description | Cat. No. |
|---|---|
| Kit consists of a standard contact block and instructions. | 836-N2 |

### Replacement Fingersafe Contact Block Cover Kit

| Description | Cat. No. |
|---|---|
| Clear contact block cover provides IP2X fingersafe protection. | 41162-908-01 |

## Factory-Set Temperature Controls

### *Standard Product Offering*

Standard temperature controls shipped from the factory are set at the maximum operating range and minimum differential. These settings vary for each temperature switch family depending on the combination of Style, Operator Type, and Temperature Specification configuration options. These temperature switches do not require a custom trip / reset setting characteristic. Customers still have the ability to set the operating range and differential in the field as long as they are within the limitation of switch.

### *Custom Product Offering (Customer-Specified Settings)*

Temperature controls shipped from the factory can be set to customer-requested values as long as they are within the limitation of the switch. See Product Selection, and reference Adjustable Operating Range and Adjustable Differential values in the tables. These trip and reset ranges vary depending on the Style, Operator Type, and Temperature Specification configuration. These switches require a custom trip / reset setting characteristic. To request a temperature switch with customer-specified trip and/or reset settings, order a temperature control catalog number ending with the "C" Custom Trip Reset Setting characteristic and include one of the following factory-set temperature control statements when the order is placed (within the Customer Review Request Notes field):

### *Ordering*

| | |
|---|---|
| **EXAMPLE** | Normally Closed (N.C.) contacts to open at *°F increasing temperature and close at * °F decreasing temperature.<br>—OR—<br>Normally Open (N.O.) contacts to close at * °F increasing temperature and open at *°F decreasing temperature. |

If minimum differential is not critical and the inherent minimum differential satisfies the application, specify the factory setting as follows:

| | |
|---|---|
| **EXAMPLE** | Normally Closed (N.C.) contacts to open at * °F increasing temperature. Minimum differential.<br>—OR—<br>Normally Open (N.O.) contacts to close at * °F increasing temperature. Minimum differential. |

| | |
|---|---|
| **IMPORTANT** | * Specify °F (Fahrenheit) unless otherwise noted. Typical setting tolerance is ± 1 °F. |

*When a specific factory setting is requested, the specific terminal connections must be specified — for example N.O. or N.C. It must also be specified whether the contact operation is occurring on either increasing or decreasing pressure.*

### *Two Controls in One Enclosure*

Bulletin 837 Style A Bulb and Capillary Type temperature controls that function independently can be mounted side by side in a single Type 1 enclosure. This design is ideal for installations where two controls would ordinarily be mounted. Each dual unit can be a combination of a bulb and capillary type temperature control and a Bulletin 836 Style A pressure control. See respective product tables.

To order this arrangement, specify the two desired catalog numbers in their mounted position within the dual enclosure to form a single catalog number.

### *Type 4X Enclosures*

Bulb and capillary controls can be furnished in Type 4X ROSITE polyester enclosures. Because of the intended protection by specifying Rosite, temperature controls will be supplied only with stainless steel bulb and capillaries or stainless steel bulb, capillary, and armor.

### *Special Length Capillary and Material*

A price addition, varying with the specific requirements, will be added to each control when requesting non-standard length or material for capillary, bulb, or armor. The non-standard devices are those that are not listed in tables Style A — Remote Bulb and Capillary and Style H — Direct Horizontal Immersion. Consult your Rockwell Automation sales office or Allen-Bradley distributor for pricing and availability.

During the manufacturing process, the bellows assembly is cured in an oven at the maximum range temperature of the control to achieve long control life.

## Approximate Dimensions

Dimensions in inches (millimeters). Dimensions are not intended to be used for manufacturing purposes

**Figure 79 - Remote Bulb and Capillary Type**

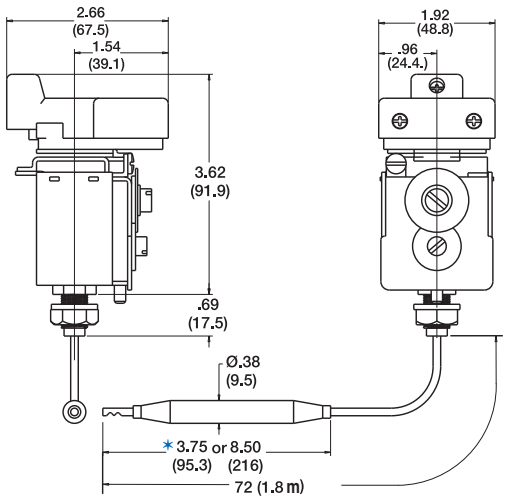


Open Type
Approximate shipping weight 2-1/2 lb (1.1 kg)

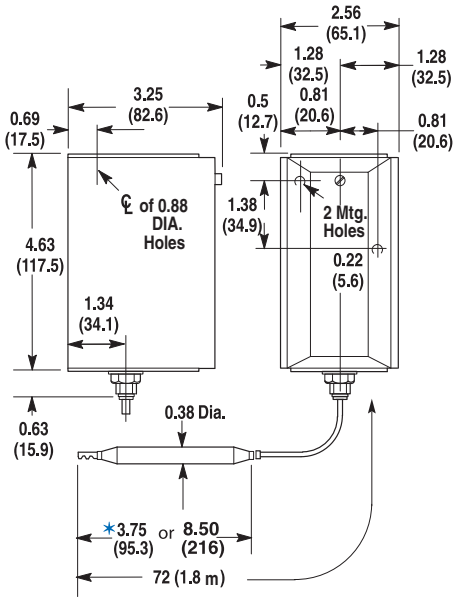


Type 1
Approximate shipping weight 3 lb (1.4 kg)
* Dimension is 8.5 in. for Cat. Nos. 837-A3 and 837-A4 controls.

**Figure 80 - Remote Bulb and Capillary Type**

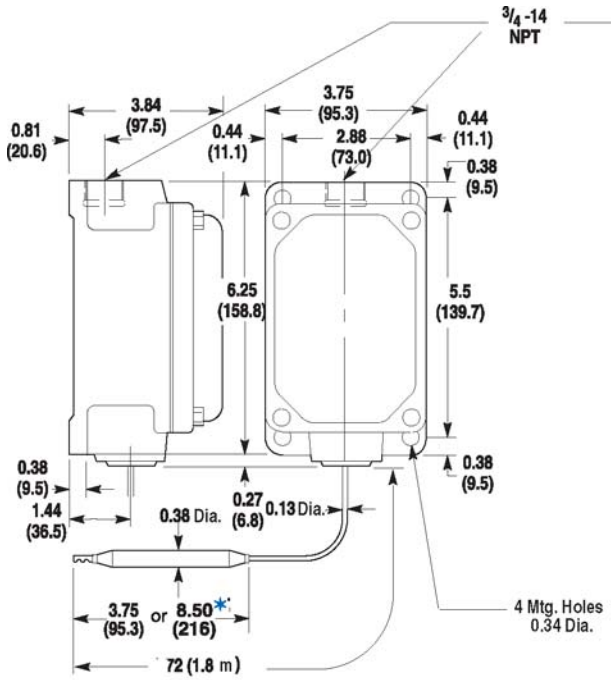


Types 7 & 9 and 4 & 13 combined
Approximate shipping weight 9 lb (4.1 kg)

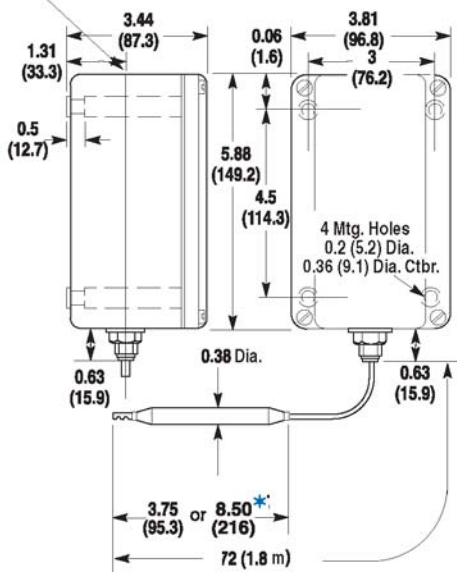


Type 4 & 13
Approximate shipping weight 3 lb (1.4 kg)
* Dimension is 8.5 in. for Cat. Nos. 837-A3 and 837-A4 controls.

**Figure 81 - Direct Vertical Immersion Type**

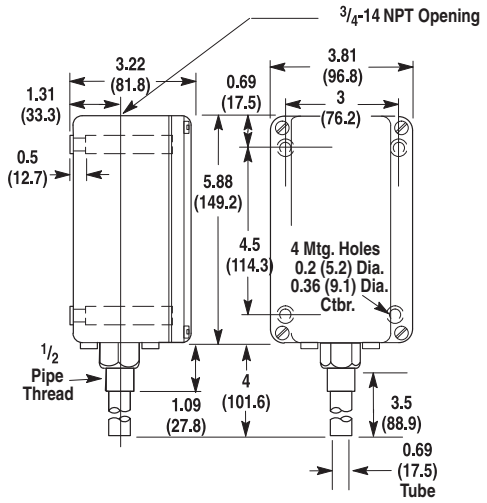


Type 4 & 13
Approximate shipping weight 3 lb (1.4 kg)

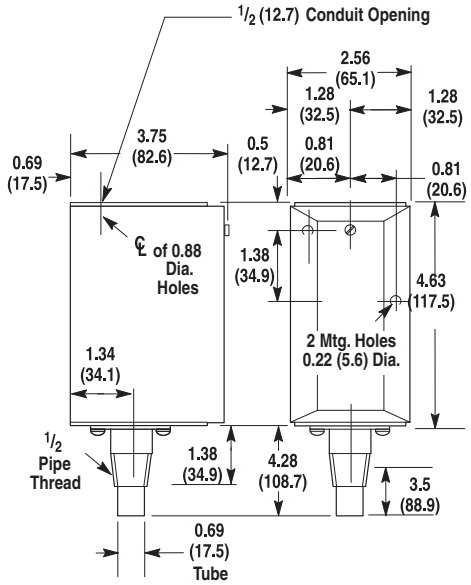


Type 1
Approximate shipping weight 3 lb (1.4 kg)

**Figure 82 - Direct Horizontal Immersion Type**

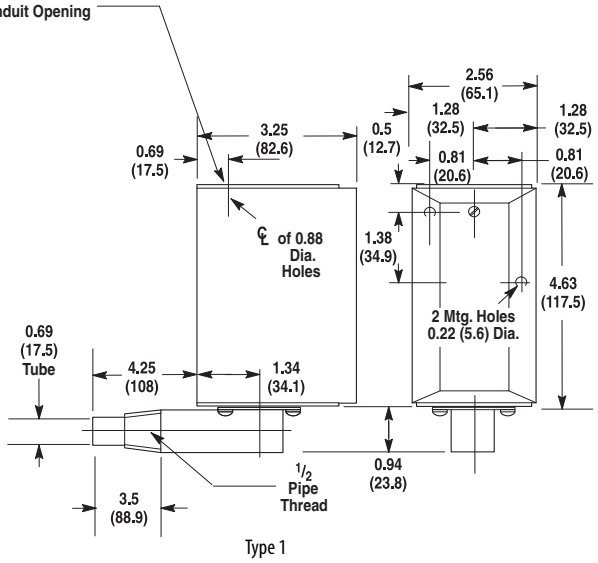


Type 1

Approximate shipping weight 4 lb (1.8 kg)

**Figure 83 - Thermostat Wells and Packing Glands**

| Drawing A | Drawing B | Drawing C |
|---|---|---|
| 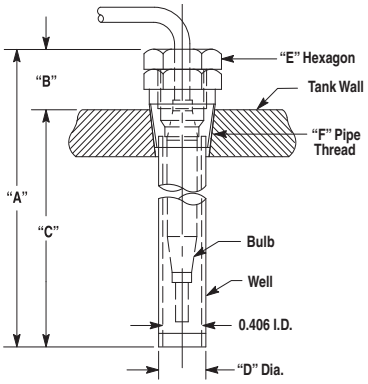 | 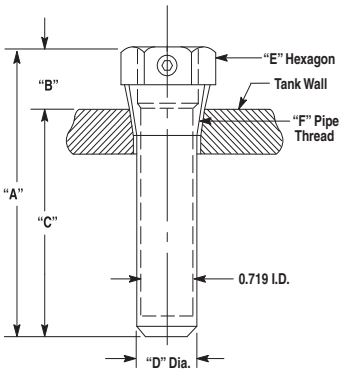 | 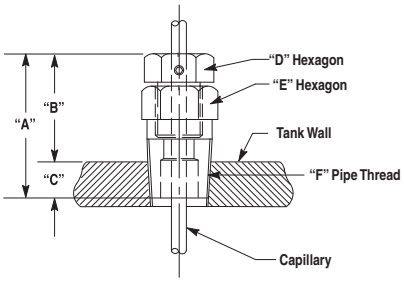 |







| Cat. No. | Drawing | A | B | C | D | E | F |
|---|---|---|---|---|---|---|---|
| 837-N1 | A | 4-5/8 (117.6) | 23/32 (18.3) | 3-29/32 (99.2) | 17/32 (13.5) | 7/8 (22.2) | 1/2 NPT |
| 837-N2 | B | 3-27/32 (97.6) | 27/32 (21.4) | 3 (76.2) | 27/32 (21.4) | 1-1/8 (28.6) | 3/4 NPT |
| 837-N3 | A | 5-13/32 (137.3) | 1-1/2 (38.1) | 3-29/32 (99.2) | 17/32 (13.5) | 7/8 (22.2) | 1/2 NPT |
| 837-N4 | C | 2-5/32 (54.8) | 1-21/32 (42.1) | 7/16 (11.1) | 3/4 (19.1) | 7/8 (22.2) | 1/2 NPT |
| 837-N5 | C | 2-5/32 (54.8) | 1-21/32 (42.1) | 7/16 (11.1) | 3/4 (19.1) | 7/8 (22.2) | 1/2 NPT |
| 837-N6 | A | 9-5/8 (244.5) | 13/16 (20.6) | 8-13/16 (223.8) | 5/8 (15.9) | 7/8 (22.2) | 1/2 NPT |
| 837-N7 | A | 10-5/32 (258) | 1-1/2 (38.1) | 8-13/16 (223.8) | 5/8 (15.9) | 7/8 (22.2) | 1/2 NPT |
| 837-N12 | A | 4-5/8 (117.6) | 23/32 (18.3) | 3-29/32 (99.2) | 17/32 (13.5) | 7/8 (22.2) | 1/2 NPT |
| 837-N13 | A | 9-5/8 (244.6) | 13/16 (20.6) | 8-13/16 (223.8) | 5/8 (15.9) | 7/8 (22.2) | 1/2 NPT |
| 837-N14 | A | 5-13/32 (137.3) | 1-1/2 (38.1) | 3-29/32 (99.2) | 17/32 (13.5) | 7/8 (22.2) | 1/2 NPT |
| 837-N15 | A | 10-5/16 (262) | 1-1/2 (38.1) | 8-13/16 (223.8) | 5/8 (15.9) | 7/8 (22.2) | 1/2 NPT |
| 837-N16 | B | 3-27/32 (97.6) | 27/32 (21.4) | 3 (76.2) | 27/32 (21.4) | 1-1/8 (28.6) | 3/4 NPT |

**IMPORTANT** Packing gland can be used to form a seal anywhere along length of capillary.

## 840 Automatic Float Switches

- Liquid Level Sensitivity from 2...5 Inches
- 0.6 ...3.8 lbs Switch Operating Force
- 2-pole contact configuration
- Tank to sump convertibility
- NEMA A600 and NEMA N300 contact ratings
- Type 1, Type 4, and Type 7 & 9 Enclosures

**Figure 84 - Bulletin 840 Style A Shown With Cover Removed**

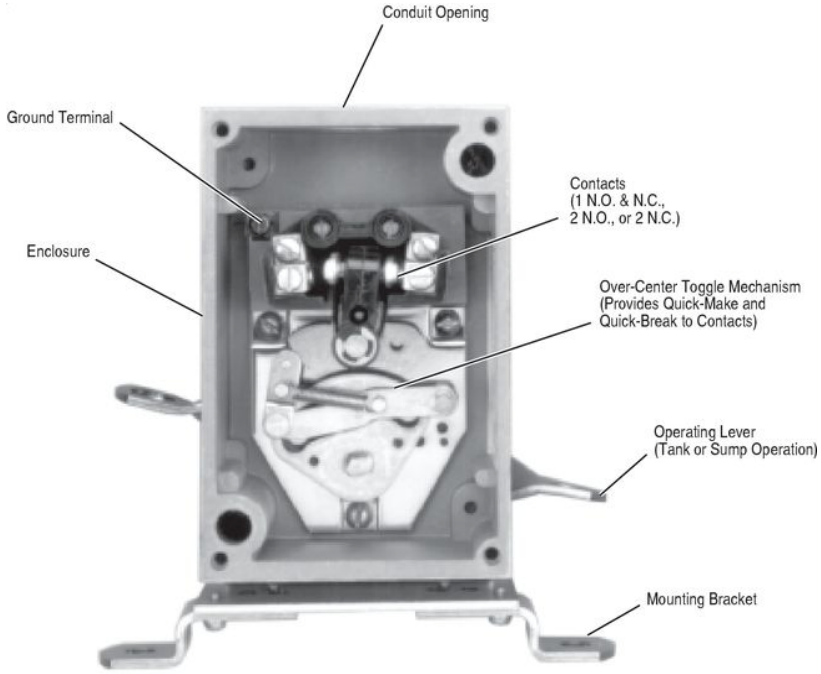


Bulletin 840 Automatic Float Switches are heavy-duty horsepower or control circuit rated devices that can be used to control and monitor liquid levels in a tank or sump. As the liquid level rises or falls in a sump or tank, at a preset level the switch can either start a motor to adjust the liquid level or activate a circuit to turn on a light or sound an alarm. Bulletin 840 Float Switches are designed for long life and heavy-duty operation. They are offered in five different styles with many different float operator assemblies. These assemblies come in either floor or base-mounted versions to meet a wide range of applications.

## Applications

- Water Treatment Plants
- Plating Plants
- Controlling Irrigation Channels
- Almost any other tank or sump application to control or monitor liquid levels

## Product Overview

| Photo | Description |
|---|---|
| **Style A — Industrial Low Operating Force** | |
| | • Wall or floor mounting accessories<br>• 2-pole switch: 1 N.O. and 1 N.C., 2 N.O., or 2 N.C. contacts<br>• Converts from tank to sump operation<br>• Maximum switch operating force of 0.9 lbs<br>• Sensitive to liquid level changes of 2 in.<br>• Type 1, Type 4, and Type 7 & 9 enclosures<br>• Contact ratings: NEMA A600 and N300<br>• Switch temperature operating range from -22…+150 °F (-30…+66 °C) |
| **Style B —Heavy-Duty Industrial** | |
| | • Wall or floor mounting accessories<br>• 2-pole switch with N.O. contacts<br>• Converts from tank to sump operation<br>• Maximum switch operating force of 3.8 lbs<br>• Sensitive to liquid level changes of 5 in.<br>• Type 1, Type 4, and Type 7 & 9 enclosures<br>• Contact ratings: NEMA A600 and N300<br>• Switch temperature operating range from -22…+150 °F (-30…+66 °C) |
| **Styles D and DS — Low Cost, Low Operating Force** | |
| | • Wall or floor mounting accessories<br>• 2-pole switch with N.O. contacts<br>• **Style D**, tank operation only<br>• **Style DS**, sump operation only<br>• Maximum switch operating force of 0.6 lbs<br>• Sensitive to liquid level changes of 3 in.<br>• Type 1 enclosure only<br>• Contact ratings: NEMA A600 and N300<br>• Switch temperature operating range from -22…+150 °F (-30…+66 °C) |

| Standards Compliance | File and Guide Numbers | | | |
|---|---|---|---|---|
| • UL 508<br>• UL 698 (Haz. Loc.)<br>• UL 1604 (Haz. Loc.)<br>• CSA 22.2 No. 14<br>• NEMA ICS-2 | UL | | CSA | |
| **Certifications** | File Number | Guide Number | File Number | Class |
| | E14842<br>E53048 (Haz. Loc.)(1) | NKPZ, NKPZ7<br>NOWT | LR1234 | 3211-06 |

(1) Style A is listed for hazardous locations. Styles B, C, D, and DS are not.

## Operation

Bulletin 840 Float Switches provide automatic control for motors that pump liquids from a sump or into a tank. The switch must be installed above the tank or sump, and the float must be in the liquid for the float switch to operate. Tank Operation: A float operator assembly is attached to the float switch by a rod, chain or cable. The float switch is actuated based on the location of the float in the liquid. The float switch contacts are open when the float forces the operating lever to the UP position. As the liquid level falls, the float and operating lever move downward. When the float reaches a preset low level, the float switch contacts close, activating the circuit and starting the motor. The contacts can directly activate a motor or provide input for a logic system to fill the tank. As the liquid level rises, the float and operating lever move upward. When the float reaches a preset high level, the float switch contacts open, deactivating the circuit and stopping the motor. Sump Operation: Sump operation is opposite tank operation.

**Figure 85 - Tank and Sump Operation**

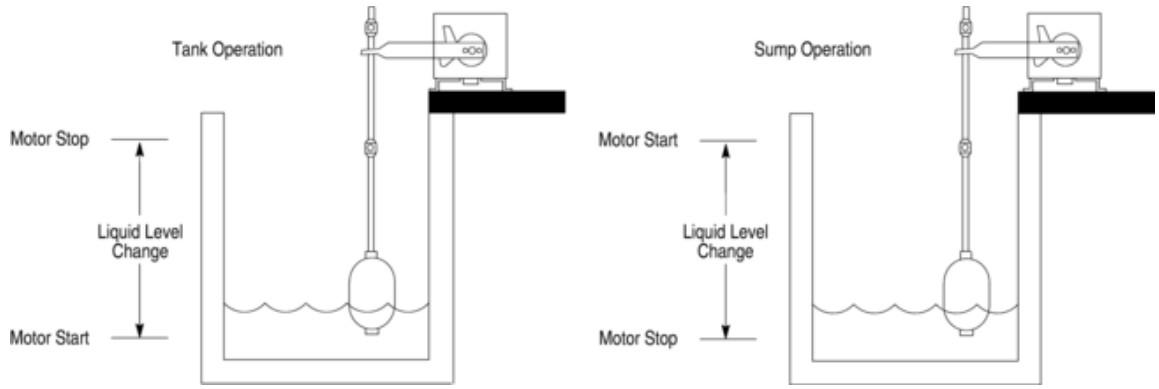


### *Temperature Range (Switch)*

The temperature range for the switch mechanism at +32 °F (0 °C) or below is based on the absence of freezing moisture, water, or other fluids that can solidify and impede the operation of the control. Temperature ratings are as follows:

- Operating: -22...+150 °F (–30...+66 °C)/ Storage:-22...+200 °F (–30...+93 °C)

### *Temperature Range (Float)*

The temperature range for the float mechanism at +32 °F (0 °C) or below is based on the absence of freezing moisture, water, or other fluids that can solidify and impede the operation of the control. Temperature ratings are as follows: Operating and Storage: –22...+200 °F (–30...+93 °C)

### *Conversions*

Bulletin 840 Styles A and B Float Switches are assembled for tank operation but can be easily converted to sump operation. Style A switches can be changed from tank to sump operation by moving the float rod to the opposite end of the double arm lever.

Styles B switches can be converted in either of the following ways:

- Remove the lever, turn the shaft 90° counterclockwise and replace the lever in its original position.
- Remove the lever and replace 180° from the original position.

**IMPORTANT** Style D is for tank operation only. Style DS is for sump operation only. These switches cannot be converted.

## Contacts

Bulletin 840 Float Switches have a snap action mechanism for quick-make and quick-break contact operation. This feature provides high snap-through forces once the mechanism has traveled the required distance.

| Maximum Contact Rating per Pole | | | | | | | |
|---|---|---|---|---|---|---|---|
| **AC — NEMA A600** | | | | | **DC — NEMA N300** | | |
| **Max. V AC** | **Make** | **Break** | **Make** | **Break** | **Max. V DC** | **Make** | **Break** |
| 120 | 60 A | 6.0 A | 7200V A | 720V A | — | — | — |
| 240 | 30 A | 3.0 A | 7200V A | 720V A | 125 | 2.2 A | 2.2 A |
| 480 | 15 A | 1.5 A | 7200V A | 720V A | 250 | 1.1 A | 1.1 A |
| 600 | 12 A | 1.2 A | 7200V A | 720V A | — | — | — |

| Maximum Horsepower Ratings | | | | | | | |
|---|---|---|---|---|---|---|---|
| **Style** | **Single-phase AC** | | **2- or 3-Phase AC** | | **DC** | | |
| | **115V** | **230V** | **115V** | **230-460-575V** | **32V** | **115V** | **230V** |
| **A** — Tank or Sump | 1 | 1 | — | — | 0.025 | 0.25 | 0.125 |
| **B** — Tank or Sump | 1.5 | 3 | — | 2 | — | 1 | 1 |
| **D** — Tank | 1.5 | 2 | 2 | 3 | 0.25 | 0.5 | 0.5 |
| **DS** — Sump | 1.5 | 2 | 2 | 3 | 0.25 | 0.5 | 0.5 |

**Figure 86 - Contact Wiring Configurations**

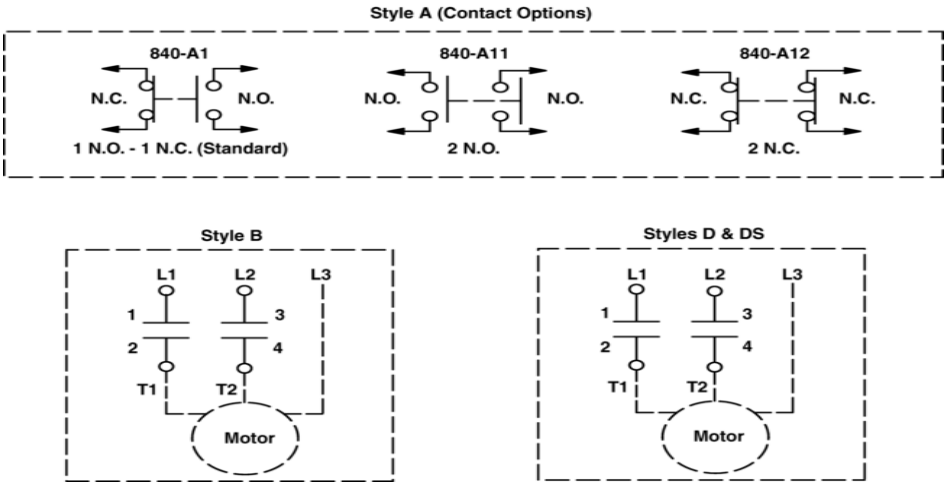

## Ordering Information

When ordering a Bulletin 840 Automatic Float Switch, two cat. nos. must be specified. The first catalog number is used to order the switch. The second cat. no. is used to order the float operator assembly and to indicate cable length modification.

| 1. Select Basic Device | 2. Select Float Operator Assembly | 3. Modifications and Accessories |
|---|---|---|
| Select a catalog number for the Float Switch. | Select a catalog number for the Float Operator Assembly | If necessary, select appropriate modifications and accessories to the float operator assembly. |

### Catalog Number Explanation

| 840 | – | A | 1 | 1 |
|---|---|---|---|---|
| a | | b | c | d |

**a**

| Bulletin Number | |
|---|---|
| **Code** | **Description** |
| 840 | Automatic Float Switch |

**b**

| Style of Device | |
|---|---|
| **Code** | **Description** |
| A | Industrial Low Operating Force |
| B | Heavy-Duty Industrial |
| D | Low Cost, Low Operating Force |
| DS | Low Cost, Low Operating Force |

**c**

| Enclosure Type | |
|---|---|
| **Code** | **Description** |
| 1 | Type 1 |
| 4 | Type 4 |
| 7 | Type 7 & 9 |

**d**

| Contact Modifications (Style A Only) | |
|---|---|
| **Code** | **Description** |
| blank | 1 N. O. and 1 N.C. |
| 1 | 2 N.O. |
| 2 | 2 N.C. |

## Product Selection

### Style A , Type 4— Tank or Sump Operation

| Maximum Horsepower Ratings | | | | | | | Type 1 Enclosure | Type 4 Enclosure (Fiberglass Polyester) | Type 7 & 9 Enclosure(2) |
|---|---|---|---|---|---|---|---|---|---|
| Single-phase AC | | 2 or 3-Phase AC | | DC | | | | | |
| 115V | 230V | 115V | 230/460/575V | 32V | 115V | 230V | Cat. No. (1) | Cat. No. | Cat. No. |
| 1 | 1 | — | — | 0.25 | 0.25 | 0.125 | 840-A1 | 840-A4 | 840-A7 |

(1) Style A devices are supplies with 1 N.O. and 1 N.C. contact. For two N.O. contacts, add Suffix Code 1 to the catalog number. For two N.C. contacts, add Suffix Code 2 to the catalog number.

(2) Class - Groups C, D. Class II - Groups E, F, G

### Style B, Type 1 — Tank or Sump Operation

| Maximum Horsepower Ratings | | | | | | | Type 1 Enclosure | Type 4 Enclosure (Fiberglass Polyester) | Type 7 & 9 Enclosure(1) |
|---|---|---|---|---|---|---|---|---|---|
| Single-phase AC | | 2 or 3-Phase AC | | DC | | | | | |
| 115V | 230V | 115V | 230/460/575V | 32V | 115V | 230V | Cat. No. | Cat. No. | Cat. No. |
| 1.5 | 3 | — | 2 | — | 1 | 1 | 840-B1 | 840-B4 | 840-B7 |

(1) Class - Groups C, D. Class II - Groups E, F, G

### Styles D and DS, Type 1

| Style D — Tank or Sump Operation | | | | | | | |
|---|---|---|---|---|---|---|---|
| Maximum Horsepower Ratings | | | | | | | Type 1 Enclosure |
| Single-phase AC | | 2 or 3-Phase AC | | DC | | | |
| 115V | 230V | 115V | 230/460/575V | 32V | 115V | 230V | Cat. No. |
| 1.5 | 2 | 2 | 3 | 0.25 | 0.5 | 0.5 | 840-D1 |
| **Style DS — Tank or Sump Operation** | | | | | | | |
| Maximum Horsepower Ratings | | | | | | | Type 1 Enclosure |
| Single-phase AC | | 2 or 3-Phase AC | | DC | | | |
| 115V | 230V | 115V | 230/460/575V | 32V | 115V | 230V | Cat. No. |
| 1.5 | 2 | 2 | 3 | 0.25 | 0.5 | 0.5 | 840-DS1 |

## Float Operator Assemblies

A Float Operator Assembly must be included with the basic device for the float switch to operate. Select and specify a catalog number that meets your requirements. Select modifications and accessories to the Float Operator Assembly from tables on Ordering Modifications.

All Allen-Bradley Float Operator Assemblies come equipped with a number of plated steel or stainless steel assembly parts to allow wall or floor mounting and to accommodate different tank or sump depths. The plated steel and stainless steel assembly parts are made of the material that is listed in the table below.

### *Single Arm Lever*

Float is fixed to one end of the rod. Adjustable stop collars at top of the rod operate the switch. The rod can need guides to stabilize vertical float movement. Because of the unlimited number of possible mounting arrangements, guides must be provided by the user.

| Single Arm Lever Maximum Rod Lengths | |
|---|---|
| **Style** | **Stainless Steel** |
| A | 9 ft |
| B | 18 ft |
| D, DS | 9 ft |

### Base-mounted, Stainless Steel Float Operator Assembly

| Description | | Type | Style | Stainless Steel | |
|---|---|---|---|---|---|
| | | | | Float Size (1) | Cat. No. |
| 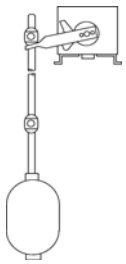 | **Stainless Steel Operator Assemblies include the following:**<br>• Two 3 ft lengths of 3/8 in. tubing with coupling<br>• Two adjustable stop collars<br>• One fixed stop collar (with Cat. No. 840-1BCE only when required) | 1 | A,D,DS | A | 840-1AD |
| | | | B | F | 840-1BCE |
| | | 4 | A | A | 840-1AD |
| | | | B | F | 840-1BCE |
| | | 7 & 9 | A | A | 840-1AD |
| | | | B | F | 840-1BCE |

(1) Float Size: Type A = 6 in. diameter sphere, Type F = 7 x 12.5 in. elongated sphere (diameter x length). Float size dimensions do not imply that Float Operator Assemblies can be interchanged.

### Floor-mounted, Stainless Steel Float Operator Assembly

| Description | | Type | Style | Stainless Steel | |
|---|---|---|---|---|---|
| | | | | Float Size (1) | Cat. No. |
| 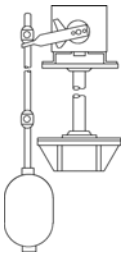 | **Stainless Steel Operator Assemblies include the following:**<br>• 20 in. of 1 in. pipe<br>• Two 3 ft lengths of 3/8 in. tubing with coupling<br>• Two adjustable stop collars<br>• One fixed stop collar (with Cat. Nos. 840-2BC1, -2B47, -2C47 only when required)<br>• Stainless Steel Float<br>• Floor mounting bracket | 1 | A | A | 840-2A1 |
| | | | B | F | 840-2BC1 |
| | | 4 | A | A | 840-2A47 |
| | | | B | F | 840-2B47 |
| | | 7 & 9 | A | A | 840-2A47 |
| | | | B | F | 840-2B47 |

(1) Float Size: Type A = 6 in. diameter sphere, Type F = 7 x 12.5 in. elongated sphere (diameter x length). Float size dimensions do not imply that Float Operator Assemblies can be interchanged.

### *Double Arm Lever*

The double arm has a counterweight to offset weight of rod and float. The float moves up and down between stops on the rod so that large changes in liquid level only move the rod a short distance. Top of the rod is fixed to switch lever. The rod can need user-provided guides to stabilize vertical float movement. See Maximum Rod Lengths table below.

| Double Arm Lever Maximum Rod Lengths | |
|---|---|
| **Style** | **Stainless Steel** |
| A, B | 33 ft |

### Base-mounted, Stainless Steel Float Operator Assembly

| Description | | Type | Style | Stainless Steel | |
|---|---|---|---|---|---|
| | | | | Float Size (1) | Cat. No. |
| 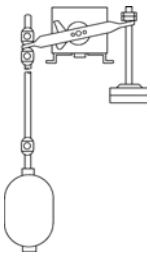 | **Stainless Steel Operator Assemblies include the following:**<br>• Half Arm Lever (when required)<br>• Double Arm Lever<br>• Counterweight<br>• Two 3 ft lengths of 3/8 in. tubing with coupling<br>• Three adjustable stop collars<br>• One fixed stop collar<br>• Stainless Steel Float | 1 | A | A | 840-6A1 |
| | | | B | F | 840-6BCE |
| | | 4 | A | A | 840-6A1 |
| | | | B | F | 840-6BC47 |
| | | 7 & 9 | A | A | 840-6A47 |
| | | | B | F | 840-6BCE47 |

(1) Float Size: Type A = 6 in. diameter sphere, Type F = 7 x 12.5 in. elongated sphere (diameter x length). Float size dimensions do not imply that Float Operator Assemblies can be interchanged.

### Floor-mounted, Stainless Steel Float Operator Assembly

| Description | | Type | Style | Stainless Steel | |
|---|---|---|---|---|---|
| | | | | Float Size (1) | Cat. No. |
| 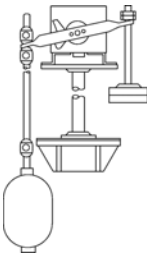 | **Stainless Steel Operator Assemblies include the following:**<br>• 20 in. of 1 in. pipe<br>• Two 3 ft lengths of 3/8 in. tubing with coupling<br>• Two adjustable stop collars<br>• One fixed stop collar (with Cat. Nos. 840-2BC1, -2B47, -2C47 only when required)<br>• Stainless Steel Float<br>• Floor mounting bracket | 1 | A | A | 840-7A1 |
| | | | B | F | 840-7BC1 |
| | | 4 | A | A | 840-7A1 |
| | | | B | F | 840-7BC1 |
| | | 7 & 9 | A | A | 840-7A47 |
| | | | B | F | 840-7B47 |

(1) Float Size: Type A = 6 in. diameter sphere, Type F = 7 x 12.5 in. elongated sphere (diameter x length). Float size dimensions do not imply that Float Operator Assemblies can be interchanged.

### *Double Parallel Arms*

Used with unguided rods up to 33 ft long. The float moves up and down between stops on the rod so that large changes in liquid level only move the rod a short distance. Parallel levers keep the rod vertical and help limit sideways movement. Top of the rod is fixed to switch lever.

#### Base-mounted, Stainless Steel Float Operator Assembly

| Description | | Type | Style | Stainless Steel | |
|---|---|---|---|---|---|
| | | | | Float Size (1) | Cat. No. |
| 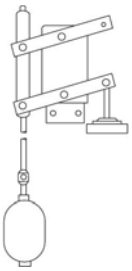 | **Stainless Steel Operator Assemblies include the following:**<br>• Additional Double Arm Levers<br>• Counterweight<br>• Two 3 ft lengths of 3/8 in. tubing with coupling<br>• One adjustable stop collar<br>• One fixed stop collar<br>• Stainless Steel Float | 1 | A | A | 840-8A1 |
| | | | B | F | 840-8B1 |
| | | 4 | A | A | 840-8A4 |
| | | | B | F | 840-8B4 |
| | | 7 & 9 | A | A | 840-8A47 |
| | | | B | F | 840-8B47 |

(1) Float Size: Type A = 6 in. diameter sphere, Type F = 7 x 12.5 in. elongated sphere (diameter x length). Float size dimensions do not imply that Float Operator Assemblies can be interchanged.

#### Floor-mounted, Stainless Steel Float Operator Assembly

| Description | | Type | Style | Stainless Steel | |
|---|---|---|---|---|---|
| | | | | Float Size (1) | Cat. No. |
| 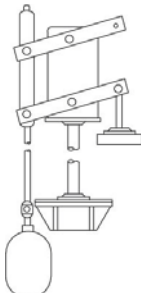 | **Stainless Steel Operator Assemblies include the following:**<br>• Additional Double Arm Levers<br>• Counterweight<br>• Floor mounting bracket<br>• 20 in. of 1 in. pipe<br>• Two 3 ft lengths of 3/8 in. tubing with couplings<br>• One adjustable stop collar<br>• One fixed stop collar<br>• Stainless Steel Float | 1 | A | A | 840-9A1 |
| | | | B | F | 840-9B1 |
| | | 4 | A | A | 840-9A4 |
| | | | B | F | 840-9B4 |
| | | 7, 9 | A | A | 840-9A47 |
| | | | B | F | 840-9B47 |

(1) Float Size: Type A = 6 in. diameter sphere, Type F = 7 x 12.5 in. elongated sphere (diameter x length). Float size dimensions do not imply that Float Operator Assemblies can be interchanged.

### *Double Arm Lever, Double Pulley*

A cable runs over a self-supported double pulley. The cable has a float that is fixed at one end and a counterweight at the other end. Adjustable stop collars on the cable move the switch operating lever.

**Base-mounted, Stainless Steel Float Operator Assembly**

| Description | | Type | Style | Stainless Steel | |
|---|---|---|---|---|---|
| | | | | Float Size (1) | Cat. No. |
| 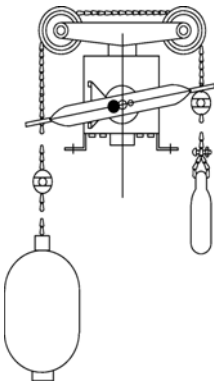 | **Stainless Steel Operator Assemblies include the following:**<br>• Double Pulley Bracket<br>• 15 ft cable/cast iron counterweight assembly<br>• Two adjustable stop collars<br>• Stainless Steel Float | 1 | B | F | 840-4BC1 |
| | | 4 | B | F | 840-4B4 |
| | | 7 & 9 | A | A | 840-4A47 |
| | | | B | F | 840-4BC47 |

(1) Float Size: Type A = 6 in. diameter sphere, Type F = 7 x 12.5 in. elongated sphere (diameter x length). Float size dimensions do not imply that Float Operator Assemblies can be interchanged.

**Floor-mounted, Stainless Steel Float Operator Assembly**

| Description | | Type | Style | Stainless Steel | |
|---|---|---|---|---|---|
| | | | | Float Size (1) | Cat. No. |
| 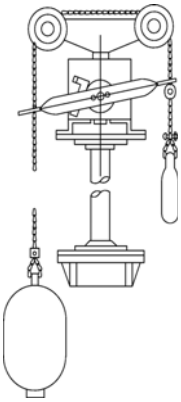 | **Stainless Steel Operator Assemblies include the following:**<br>• Double Arm Bracket<br>• Floor mounting bracket<br>• 20 in. of 1 in. pipe<br>• 15 ft cable/cast iron counterweight assembly<br>• Two adjustable stop collars<br>• Stainless Steel Float | 1 | B | F | 840-5BC1 |
| | | 4 | B | F | 840-5B4 |
| | | 7 & 9 | A | A | 840-5A47 |
| | | | B | F | 840-5B47 |

(1) Float Size: Type A = 6 in. diameter sphere, Type F = 7 x 12.5 in. elongated sphere (diameter x length). Float size dimensions do not imply that Float Operator Assemblies can be interchanged.

### *Double Arm Lever, Single Sheave Wheel*

Used with Style A switch only. A cable runs over a single pulley that is mounted on top of float switch. The cable has a float that is fixed at one end and a counterweight at the other end. Adjustable stop collars on the cable move the switch operating lever.

**Base-mounted, Stainless Steel Float Operator Assembly**

| Description | | Type | Style | Stainless Steel | |
|---|---|---|---|---|---|
| | | | | Float Size (1) | Cat. No. |
| 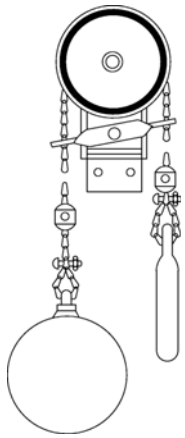 | **Stainless Steel Operator Assemblies include the following:**<br>• Pulley Assembly<br>• 15 ft cable/cast iron counterweight assembly<br>• Two adjustable stop collars<br>• Stainless Steel Float | 1 | A | A | 840-4A1 |
| | | 4 | A | A | 840-4A4 |

(1) Float Size: Type A = 6 in. diameter sphere, Type F = 7 x 12.5 in. elongated sphere (diameter x length). Float size dimensions do not imply that Float Operator Assemblies can be interchanged.

**Floor-mounted, Stainless Steel Float Operator Assembly**

| Description | | Type | Style | Stainless Steel | |
|---|---|---|---|---|---|
| | | | | Float Size (1) | Cat. No. |
| 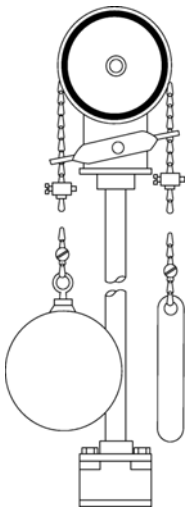 | **Stainless Steel Operator Assemblies include the following:**<br>• Pulley Assembly<br>• Floor mounting bracket<br>• 20 in. of 1 in. pipe<br>• 15 ft cable/cast iron counterweight assembly<br>• Two adjustable stop collars<br>• Stainless Steel Float | 1 | A | A | 840-5A1 |
| | | 4 | A | A | 840-5A4 |

(1) Float Size: Type A = 6 in. diameter sphere, Type F = 7 x 12.5 in. elongated sphere (diameter x length). Float size dimensions do not imply that Float Operator Assemblies can be interchanged.

### *Single Arm Lever, Separate Pulleys*

A cable runs over two pulleys that are separate from the switch. The cable has a float fixed at one end and a counterweight at the other end. Adjustable stop collars on the cable move the switch operating lever.

**Base-mounted, Stainless Steel Float Operator Assembly**

| Description | | Type | Style | Stainless Steel | |
|---|---|---|---|---|---|
| | | | | Float Size (1) | Cat. No. |
| 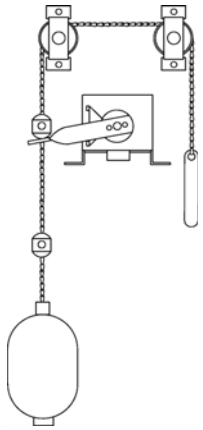 | **Stainless Steel Operator Assemblies include the following:**<br>• Two pulleys for separate mounting<br>• 15 ft cable/cast iron counterweight assembly<br>• Two adjustable stop collars<br>• Stainless Steel Float | 1 | A, D, DS | A | 840-3AD |
| | | | B | F | 840-3BCE |
| | | 4 | A | A | 840-3AD |
| | | | B | F | 840-3BCE |
| | | 7 & 9 | A | A | 840-3AD |
| | | | B | F | 840-3BCE |

(1) Float Size: Type A = 6 in. diameter sphere, Type F = 7 x 12.5 in. elongated sphere (diameter x length). Float size dimensions do not imply that Float Operator Assemblies can be interchanged.

**Operator Assembly Parts Material**

| Stainless Steel | |
|---|---|
| **Assembly Part** | **Material** |
| 3/8 in. Rod | Two 3 ft tubes (Type 304) with coupling (Type 303) |
| Cable | 15 ft Cable, (Type 304) |
| Stop Collars | Type 303 |
| Float | Type 304 |

### *Modifications*

Modifications are ordered by adding the appropriate modification suffix code to the catalog number of the float operator assembly. See the Modifications table below.

| Additional Stainless Steel Cable | |
|---|---|
| **Description** | **Modification Suffix Code** |
| For stainless steel assemblies, additional cable, longer than 15 ft., can be supplied factory-installed. To order, add the suffix code at right followed by a number for the total amount of cable required. **Example:** Float Operator Assembly, **Cat. No. 840-4A1** with five additional feet of stainless steel cable (20 ft. total) would become **840-4A1X920**. | X9_ |

### *Accessories*

Accessories are ordered as separate catalog numbers. Select the required accessories from the Accessories table below.

| Additional Rod | |
|---|---|
| **Description** | **Cat. No.** |
| Additional 3 ft. sections of stainless steel tubing can be supplied for Float Operator Assemblies. All necessary couplings are included. | 840-N1 |

## Approximate Dimensions and Shipping Weights

Dimensions in inches (millimeters). Dimensions are not intended to be used for manufacturing purposes

**Figure 87 - Type 1 - Mounting Bracket**

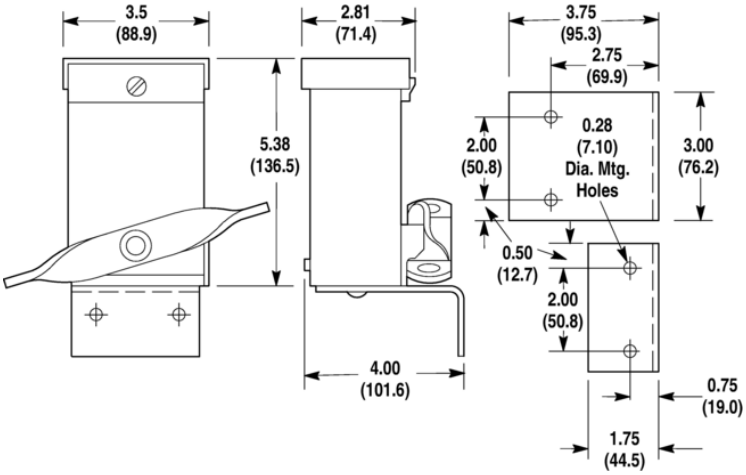


Style A —Approximate Shipping Weight 4 lbs (1.8 kg)

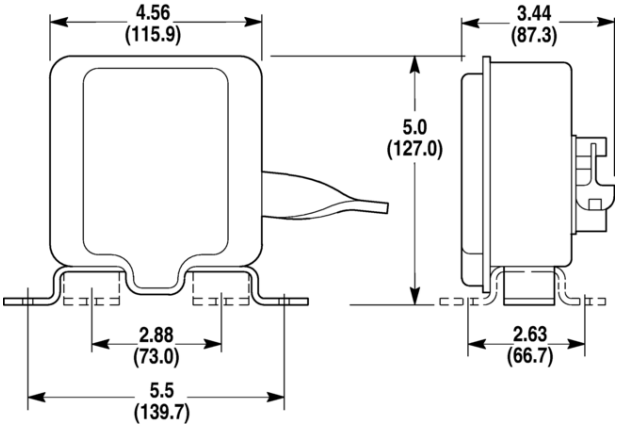


Style B—Approximate Shipping Weight 3 lbs (1.4 kg)

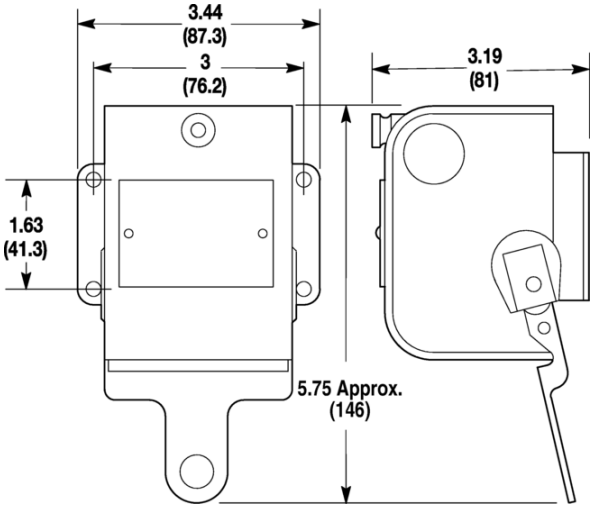


Styles D and DS —Approximate Shipping Weight 2 lbs (0.9 kg)

**Figure 88 - Type 4**

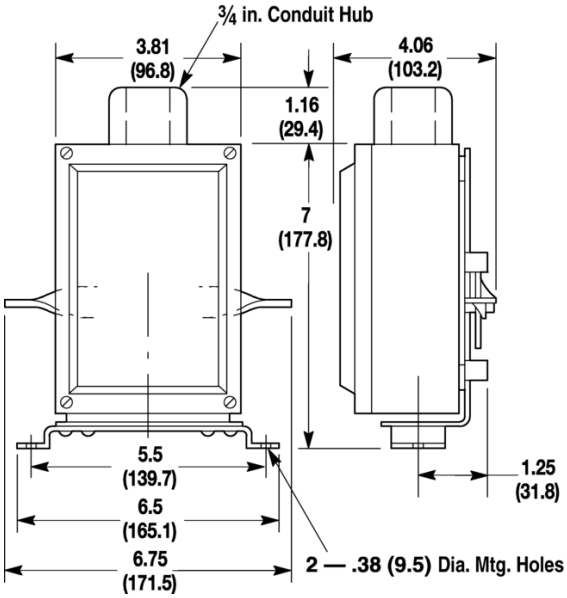


Styles A and B —Approximate Shipping Weight 4 lbs (1.8 kg)

## 808 Speed Sensing Switches

- Maximum Shaft Speeds up to 2000 RPM
- Adjustable Ranges 15...1000 RPM
- Type 1, Type 4 & 13, and Type 7 & 9 Enclosures
- Variety of Mounting Arrangements
- Normally Open or Normally Closed Contacts

Bulletin 808 Type 1, 4 & 13 without Mounting Bracket

Bulletin 808 Speed Switches are pilot devices that are used for detecting speed or direction of rotation. They are commonly used in applications requiring forward plugging, motor sequencing, and anti-plugging circuitry and are an effective means of detecting broken belts or couplings. Allen-Bradley Bulletin 808 Speed Switches utilize magnetic coupling technology to increase product life and reliability, eliminating the possibility of failure due to mechanical and hydraulic couplings that can wear or leak over time. Bulletin 808 Speed Switches are supplied as standard with a sealed outboard bearing and an additional external seal. The external seal reduces the effects of contaminants and increases the life of the device. Bulletin 808 Speed Switches offer various mounting arrangements and have been designed to allow for easy speed adjustments in the field.

Speed switches are not designed to sense shaft speed below 15 RPM, and will not sense zero shaft speed. Low RPM sensing can be achieved by modifying the shaft speed ratio via gearing or pulley arrangements. Speed switches wired for plugging applications achieve zero speed by employing the millisecond decay of the electromagnetic fields of the reversing starter and motor.

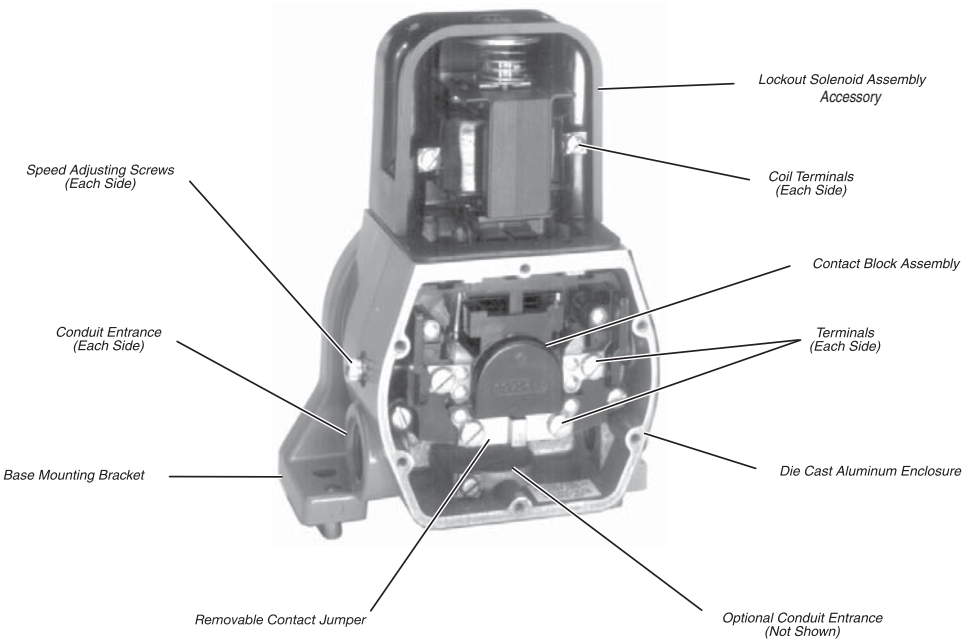


## Applications

- Machine Tools
- Large Conveyors
- Punch Presses
- Material Lift Over/Under Speed
- Fan Rotation
- Pump Operation

## Product Overview

| Photo | Description |
|---|---|
| **Low Speed Switches** | |
| | **Style J**<br>• Normally open contacts<br>• 1200 RPM maximum shaft speed<br>• Type 1, 4 & 13, and 7 & 9<br>• Variety of mounting arrangements<br>• 15…80 RPM adjustment range for contact operation |
| | **Style K**<br>• Normally closed contacts<br>• 1200 RPM maximum shaft speed<br>• Type 1, 4 & 13, and 7 & 9<br>• Variety of mounting arrangements<br>• 15…80 RPM adjustment range for contact operation |
| **High-Speed Switches** | |
| | **Style M**<br>• Normally open contacts<br>• 2000 RPM maximum shaft speed<br>• Type 1, 4 & 13, and 7 & 9<br>• Variety of mounting arrangements<br>• 50…1000 RPM adjustment range for contact operation |
| | **Style R**<br>• Normally closed contacts<br>• 2000 RPM maximum shaft speed<br>• Type 1, 4 & 13, and 7 & 9<br>• Variety of mounting arrangements<br>• 50…1000 RPM adjustment range for contact operation |

**Standards Compliance**

- UL 698 (Haz. Loc.)
- UL 1604 (Haz. Loc.)
- UL 508
- CSA 22.2 No. 14
- NEMA ICS-2

**Certifications**

**File and Guide Numbers**

| UL | | CSA | |
|---|---|---|---|
| **File Number** | **Guide Number** | **File Number** | **Class** |
| E10314 (Haz. Loc.)<br>E14840 | NOIV, NOIV7, NKCR | LR11924 (Haz. Loc.)<br>LR1234 | 3218-02<br>3211-03 |

## Typical Industrial Applications

### *Plugging*

Stops a motor quickly. A speed switch with normally open contacts is used with a contactor or starter that is wired to reverse the field windings of a squirrel cage motor. In plugging applications, the device, when properly adjusted to given conditions, will provide the control circuit logic to apply reverse energy to the motor to reach zero speed. The motor, electrical power distribution, and machine must be designed to handle sudden stopping.

**Application examples include:**

- Milling Machines
- Drill Presses
- Lathes

### *Anti-Plugging*

Allows a machine to coast until it reaches a safe speed. A speed switch with normally closed contacts is wired into a suitable circuit. When properly set, the device will not allow reversing or apply braking, by a designated method, until the machine has reached a safe speed.

Application examples include:

- Punch Press Flywheels
- Large Machining Tables

### *Speed Sensing*

Detects approximate shaft speed. The device with normally open or normally closed contacts can be used, in an appropriate circuit, to sense the approximate speed of a rotating shaft.

Application examples include:

- Conveyors
- Vertical Lift Equipment

### *Direction of Rotation*

Detects direction of shaft rotation. The device can be wired into a circuit to sense clockwise or counterclockwise shaft rotation. Normally open or normally closed contacts can be used depending upon the requirements of the circuit.

Application examples include:

- Pump Rotation
- Ventilating Fans

## Operation of 808 Speed Switch

When the shaft of a speed switch is rotated, a magnetic induction linkage operates a contact. One contact is provided for clockwise operation, and one contact for counterclockwise operation. See Figure 1 for a simplified view of the operating mechanism of a Speed Switch with normally open contacts. Operation of a device with normally closed contacts is similar.

When the shaft (1) rotates, the field of the magnet (2) induces eddy currents in the copper cup (3). These currents produce an electromagnetic torque proportional to the shaft speed, which produces a rotational torque on the cup in the same direction as the shaft rotation. The cup engages a contact operating lever (4) to activate the contacts.

As the shaft speed increases, the operating torque will also increase. When the torque has increased enough to overcome an opposing adjustable spring force (5), the moveable contact (6) is forced against the stationary contact (7). The contacts close and will remain closed as the shaft speed increases to its normal value.

Similarly, as the shaft speed is decreased, a speed is reached where the spring force again exceeds the operating torque and the contacts return to their normal position.

As the shaft speed increases, the contact set speed (the speed at which the contacts operate) will be at a higher RPM than the speed where the contacts reset (return to their normal position) on decreasing RPM. The difference in these contact operating values is called the differential.

### *Temperature Range*

Temperatures below 32 °F (0 °C) are based on the absence of freezing moisture, water, or other fluids that may solidify and impede contact operation of the control.

| | |
|---|---|
| Operating | –22… +150 °F(–30…+66 °C) |
| Storage | –22…+200 °F (–30…+93 °C) |

### *Typical Control Circuits*

Forward Plugging - Circuit that is shown in Figure 2 is a typical control circuit for forward direction plugging with optional lockout protection. Operation is as follows:

Pushing START energizes the forward coil and closes normally open contact F1; the motor runs forward. Normally closed contact F2 opens the circuit so the reverse coil does not energize. The forward contact on the speed switch closes. Pushing STOP drops out the forward contact. Then the reverse contactor or starter is energized and the motor is plugged. When the motor speed decreases to the preset speed setting of the speed switch, the contact opens and drops out the reverse contactor.

Conveyor Sequencing - Circuit that is shown in Figure 2 is a control circuit for conveyor sequencing. Operation is as follows:

Pushing START energizes coil M1 to start the first conveyor and closes the normally open contact. When the first conveyor reaches the preset speed setting of the speed switch, the speed switch contact closes, energizing coil M2 to start the second conveyor. Pushing STOP drops out coils M1 and M2, stopping the conveyors.

Anti-Plugging - Circuit that is shown in Figure 2 is a typical anti-plugging control circuit. The circuit is used where damage would result from a sudden reversal of power. Bulletin 808 contacts keep the reverse circuit open until the motor has coasted to a preset speed.

**Figure 89 - Operating Mechanism**

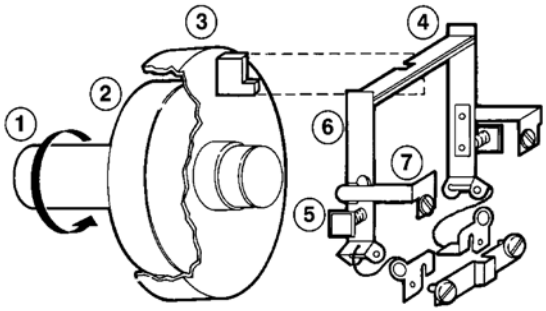


**Figure 90 - Typical Control Circuits**

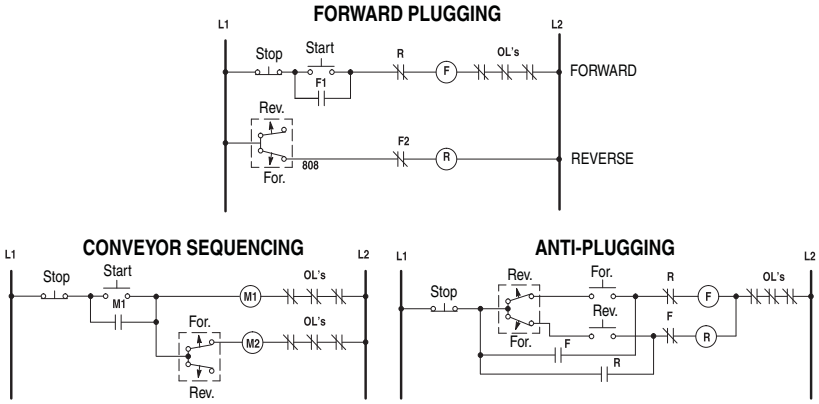


## *Lockout Solenoid*

In some applications, an accidental turn of the shaft can close the Bulletin 808 contacts that jog or start the motor. To guard against this, the Bulletin 808 can be equipped with a lockout solenoid, which mechanically restrains the contacts from operating unless the lockout coil is energized.

## *Mounting*

The Type 1, 4 & 13 enclosure is available in three types of mounting brackets. They are base mounting, 3-point flange mounting and 4-point flange mounting. These devices are also available without mounting bracket for direct mounting. The Type 7 & 9 enclosure is available with base mounting only. Mounting brackets can be assembled at the factory, or ordered separately as accessories.

## *Installation*

For greatest accuracy, the Bulletin 808 shaft should be driven at the highest available speed within its maximum operating speed. It is recommended that the continuous driven speed be at least two times the speed at which the contacts are set to operate. This will provide the torque to hold the contacts in the desired position, reducing false contact operation under severe shock and vibration. The driven speed can be higher than the

adjustable range speed, but must not exceed the maximum shaft operating speed. There must be a positive coupling between the Bulletin 808 and machine. A rigid coupling should not be used. However, flexible couplings are recommended and available from local Power Transmission Equipment Distributors. Gears, chains, or timing belts can be used if it is not possible to mount a flexible coupling. A V-belt is not recommended for plugging applications.

### *Adjustment*

The contact operating speed is easily adjusted with two external adjustment screws, one for each set of contacts. After the speed switch has reached normal operating temperature, the screw is turned to adjust the contact operating speed. Changes in inertia (WR2) of moving equipment can require readjustment of the setpoints.

### *Shaft Loading*

If the radial and axial shaft loading values are exceeded, shortened bearing life can result. The maximum values are listed in the Maximum Shaft Loading table below. In speed sensing or direction of motion applications, a timing belt can be used. A V-belt is not recommended. Proper belt tension must be maintained to keep slippage at a minimum.

**Maximum Shaft Loading**

| Enclosure | Maximum Radial Loads | Maximum Axial Loads (Thrust Loads) |
|---|---|---|
| Type 1, 4 & 13 | 20 lbs. (89 Newtons) | 50 lbs. (222 Newtons) |
| Type 7 & 9 | 25 lbs. (111 Newtons) | 20 lbs. (89 Newtons) |

**IMPORTANT** Timing belt tension must not exceed 25 lbs. (111 Newtons).

**Typical Torque and Temperature Rise Characteristics**

| Contact Operating Range RPM | RPM Shaft Operating Speed Maximum RPM | Driving Torque Maximum lb•in (N•m) | Temperature Rise (Maximum RPM) °F (°C) |
|---|---|---|---|
| 15…80 | 1200 | 6 (.68) | 120 (49) |
| 50…1000 | 2000 | 6 (.68) | 140 (60) |

**Contact Ratings - NEMA B600**

| AC | | | | | | DC | |
|---|---|---|---|---|---|---|---|
| Maximum AC Voltage | Amperes | | Continuous Carrying Current | Voltamperes | | Maximum Voltage | Ampere |
| | Make | Break | | Make | Break | | |
| 120 | 30 | 3.00 | 5 | 3600 | 360 | 115…125<br>230…250 | 0.12<br>0.08 |
| 240 | 15 | 1.50 | 5 | 3600 | 360 | | |
| 480 | 7.5 | 0.75 | 5 | 3600 | 360 | | |
| 600 | 6 | 0.6 | 5 | 3600 | 360 | — | — |

**Figure 91 - Contact Wiring Configurations**

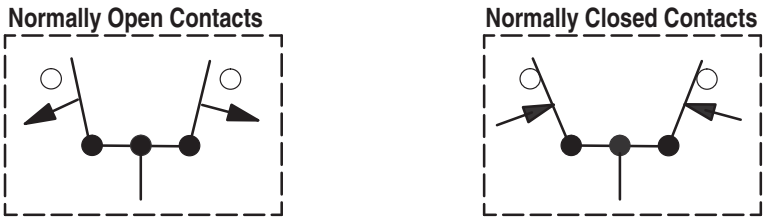


## Ordering Information

When ordering Bulletin 808 Speed Switches, select a catalog number for the device that meets your application requirements. If necessary, add the modification suffix code to the catalog number. Accessories are ordered as separate catalog numbers. Lockout solenoid can be ordered as an accessory in kit form.

### How to Order

| 1. Select Basic Device | 2. Select Modifications | 3. Select Accessories |
|---|---|---|
| Select a catalog number for the Speed Switch.See Product Selection on page 85 | If necessary, add modification suffix code to the catalog number of the basic device. See Modifications on page 86. | If necessary, select appropriate accessories as separate catalog numbers. See Accessories on page 86 |

## Catalog Number Explanation

| 808 | – | K | 1 | | X1 |
|---|---|---|---|---|---|
| | | a | b | c | d |

| a | |
|---|---|
| **Style of Device** | |
| **Code** | **Description** |
| J | Low Speed, Normally Open Contacts |
| K | Low Speed, Normally Closed Contacts |
| M | High Speed, Normally Open Contacts |
| R | High Speed, Normally Closed Contacts |

| b | |
|---|---|
| **Mounting Arrangements** | |
| **Code** | **Description** |
| 1 | Base |
| 2 | 3-point Flange |
| 3 | 4-point Flange |
| 4 | Direct Mounting (Less Bracket) |

| c | |
|---|---|
| **Enclosure Type** | |
| **Code** | **Description** |
| blank | 1, 4, and 13 |
| 7 | Type 7 & 9[(1)] |

| d | |
|---|---|
| **Modifications** | |
| **Code** | **Description** |
| X1 | Optional, Speed Switch with Bottom Conduit Opening |

(1) Available only with Mounting Arrangement 1

## Product Selection

**Style J — Low Speed, N.O. Contacts**

| Mounting Arrangement | Range of Adjustment for Contact Operation (RPM) | Shaft Operating Speed, Max. (RPM) | Type 1, 4, and 13 Enclosure | Type 7 & 9 Enclosure |
|---|---|---|---|---|
| | | | Cat. No. | Cat. No. |
| Base | 15…80 | 1200 | 808-J1 | 808-J17 |
| 3-Point Flange | 15…80 | 1200 | 808-J2 | — |
| 4-Point Flange | 15…80 | 1200 | 808-J3 | — |
| Less Bracket | 15…80 | 1200 | 808-J4 | — |

**Style K — Low Speed, N.C. Contacts**

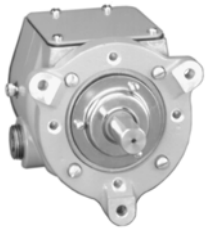

| Mounting Arrangement | Range of Adjustment for Contact Operation (RPM) | Shaft Operating Speed, Max. (RPM) | Type 1, 4, and 13 Enclosure | Type 7 & 9 Enclosure |
|---|---|---|---|---|
| | | | Cat. No. | Cat. No. |
| Base | 15…80 | 1200 | 808-K1 | 808-K17 |
| 3-Point Flange | 15…80 | 1200 | 808-K2 | — |
| 4-Point Flange | 15…80 | 1200 | 808-K3 | — |
| Less Bracket‡ | 15…80 | 1200 | 808-K4 | — |

**Style M — High-Speed, N.O. Contacts**

| Mounting Arrangement | Range of Adjustment for Contact Operation (RPM) | Shaft Operating Speed, Max. (RPM) | Type 1, 4, and 13 Enclosure | Type 7 & 9 Enclosure |
|---|---|---|---|---|
| | | | Cat. No. | Cat. No. |
| Base | 50…1000 | 2000 | 808-M1 | 808-M17 |
| 3-Point Flange | 50…1000 | 2000 | 808-M2 | — |
| 4-Point Flange | 50…1000 | 2000 | 808-M3 | — |
| Less Bracket | 50…1000 | 2000 | 808-M4 | — |

**Style R — High-Speed, N.C. Contacts**

| Mounting Arrangement | Range of Adjustment for Contact Operation (RPM) | Shaft Operating Speed, Max. (RPM) | Type 1, 4, and 13 Enclosure | Type 7 & 9 Enclosure |
|---|---|---|---|---|
| | | | Cat. No. | Cat. No. |
| Base | 50…1000 | 2000 | 808-R1 | 808-R17 |
| 3-Point Flange | 50…1000 | 2000 | 808-R2 | — |
| 4-Point Flange | 50…1000 | 2000 | 808-R3 | — |
| Less Bracket | 50…1000 | 2000 | 808-R4 | — |

## Modifications

Modifications are ordered by adding the appropriate modification suffix code to the catalog number of the float operator assembly. See the Modifications table below.

| Speed Switch with Bottom Conduit Opening | |
|---|---|
| **Description** | **Modification Suffix Code** |
| In addition to the standard conduit openings on each side, an additional opening at the bottom can be supplied. To order, add Suffix Code **X1** to the basic catalog number. Note: Not available for Type 7 & 9 enclosures. | X1 |

## Accessories

Accessories are ordered as separate catalog numbers. Select the required accessories from the Accessories table below.

| Replacement Bearing Seal | |
|---|---|
| **Description** | **Cat. No.** |
| Replacement Bearing Seal | 808-N5 |

| Mounting Brackets | |
|---|---|
| **Description** | **Cat. No.** |
| Base Mounting | 808-N1 |
| 3-Point Flange | 808-N2 |
| 4-Point Flange | 808-N3 |

| Lockout Solenoid Kit | | | |
|---|---|---|---|
| **Description** | **Coil Voltage** | **Hz** | **Cat. No.** |
| In some applications, an accidental turn of the shaft can close the contacts and jog or start the motor. To guard against this, Bulletin 808 Speed Switches can be equipped with a lockout solenoid, which mechanically restrains the contacts from operating until the lockout coil is energized. | 110/120 | 50/60 | 808-NLA1 |

## Approximate Dimensions

Dimensions in inches (millimeters). Dimensions are not intended to be used for manufacturing purposes.

## Type 1, 4, and 13[1]

**Figure 92 - Less Bracket Mounting Arrangement Type (Cat. Nos. 808-J4_, -K4_, -M4_, -R4_)**

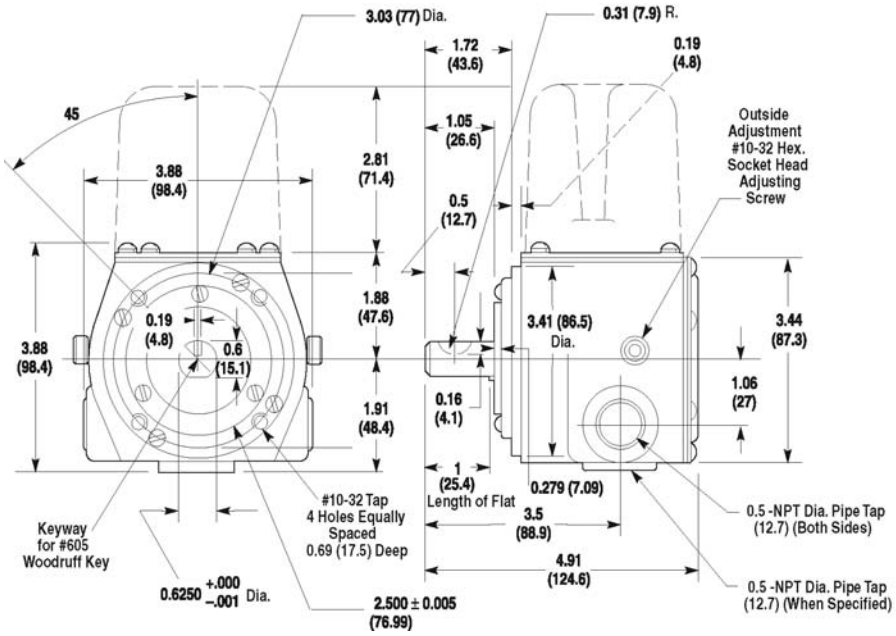


**IMPORTANT** Bulletin 808 Speed Switches with a suffix X1 added to the catalog number are equipped with a 1/2 (12.7) pipe tap in the center of the enclosure bottom on the same center line as the pipe tap at the side.

**Figure 93 - Base Mounting Arrangement Type (Cat. Nos. 808-J1_, -K1_, -M1_, -R1_)**

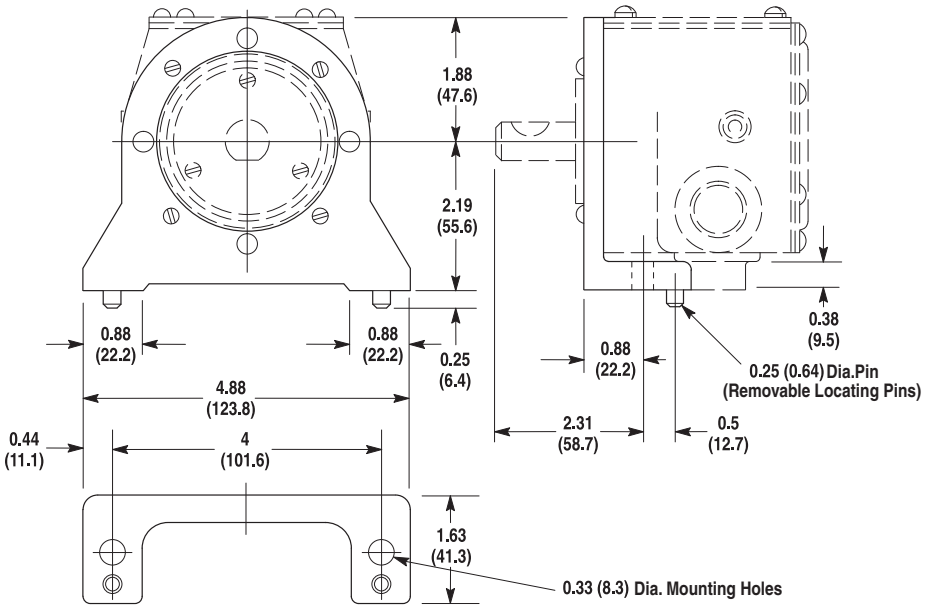


Approximate Shipping Weights:

Type 1, 4 & 13: 6 lbs (2.7 kg); Type 7 & 9: 10 lbs (4.5 kg)

(1) If lockout solenoid is used, see dotted portion of Figure 92 for dimensions.

**Figure 94 - Flange Mounting (Three-Point) Arrangement Type (Cat. Nos. 808-J2_, -K2_, -M2_, -R2_)**

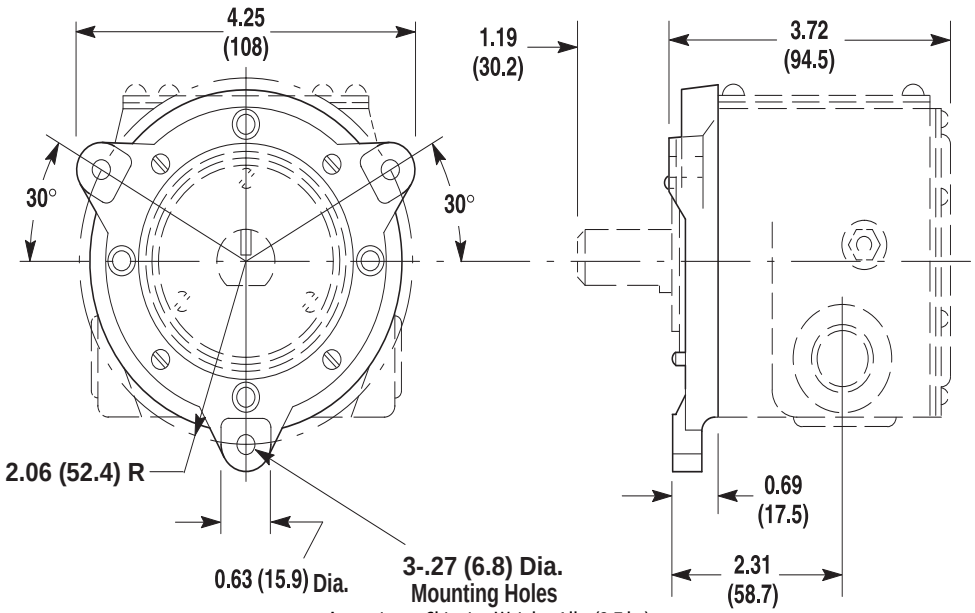


Approximate Shipping Weight: 6 lbs (2.7 kg)

**IMPORTANT** Bulletin 808 Speed Switches with a suffix X1 added to the catalog number are equipped with a 1/2 (12.7) pipe tap in the center of the enclosure bottom on the same center line as the pipe tap at the side.

**Figure 95 - Flange Mounting (Four-Point) Arrangement Type (Cat. Nos. 808-J3_, -K3_, -M3_, -R3_)**

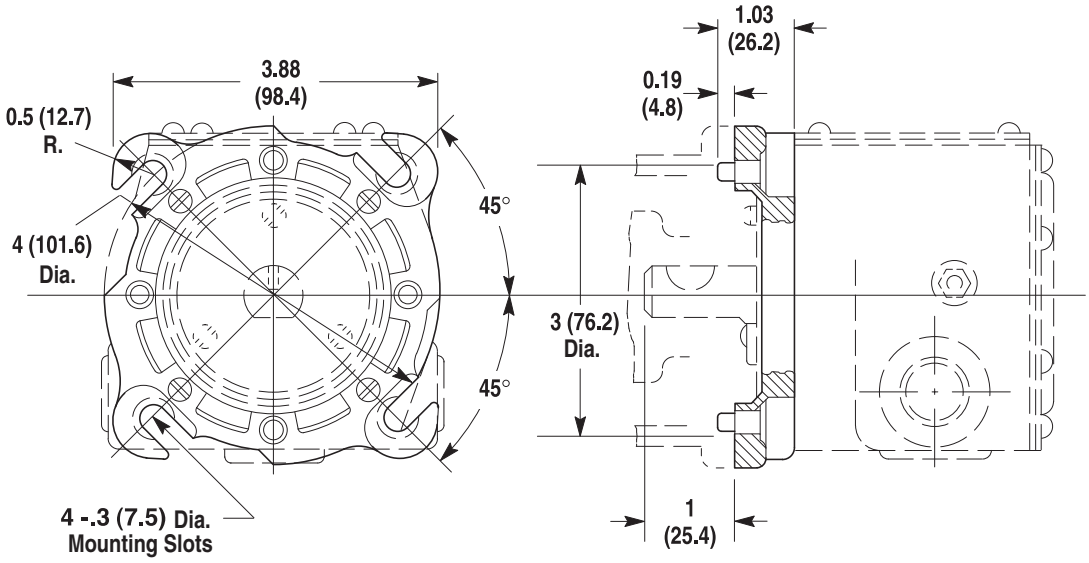


Approximate Shipping Weight: 6 lbs (2.7 kg)

## Type 7 & 9

**Figure 96 - Base Mounting Arrangement Type (Cat. Nos. 808-J17_, -K17_, -M17_, -R17)**

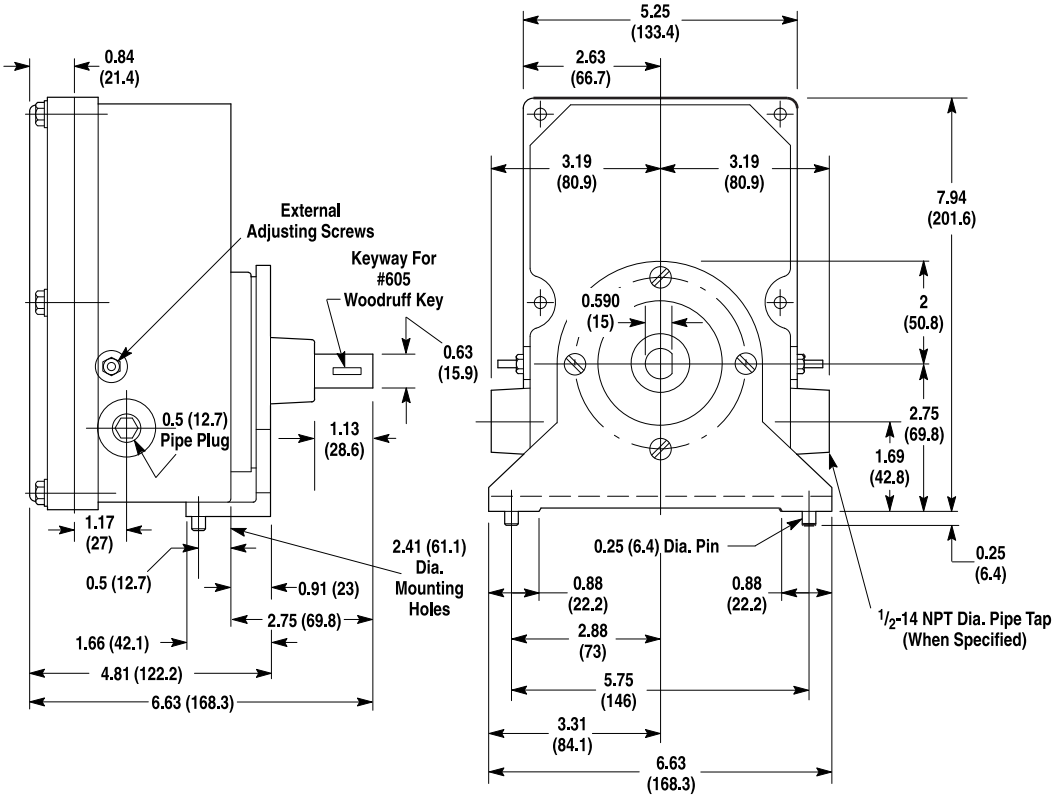


Approximate Shipping Weight: 10 lbs (4.6 kg)

## Additional Resources

These documents contain additional information concerning related products from Rockwell Automation.

| Resource | Description |
|---|---|
| Condition Sensors and Switches Brochure, publication 836E-BR001 | Provides an overview of Condition Sensing products and applications. |
| Industrial Automation Wiring and Grounding Guidelines, publication 1770-4.1 | Provides general guidelines for installing a Rockwell Automation industrial system. |
| Product Certifications website, http://www.rockwellautomation.com/global/certification/overview.page | Provides declarations of conformity, certificates, and other certification details. |

You can view or download publications at http://www.rockwellautomation.com/global/literature-library/overview.page. To order paper copies of technical documentation, contact your local Allen-Bradley distributor or Rockwell Automation sales representative.

## Rockwell Automation Support

Use the following resources to access support information.

| | | |
|---|---|---|
| **Technical Support Center** | Knowledgebase Articles, How-to Videos, FAQs, Chat, User Forums, and Product Notification Updates. | www.rockwellautomation.com/knowledgebase |
| **Local Technical Support Phone Numbers** | Locate the phone number for your country. | www.rockwellautomation.com/global/support/get-support-now.page |
| **Direct Dial Codes** | Find the Direct Dial Code for your product. Use the code to route your call directly to a technical support engineer. | www.rockwellautomation.com/global/support/direct-dial.page |
| **Literature Library** | Installation Instructions, Manuals, Brochures, and Technical Data. | www.rockwellautomation.com/literature |
| **Product Compatibility and Download Center (PCDC)** | Get help determining how products interact, check features and capabilities, and find associated firmware. | www.rockwellautomation.com/global/support/pcdc.page |

## Documentation Feedback

Your comments will help us serve your documentation needs better. If you have any suggestions on how to improve this document, complete the How Are We Doing? form at http://literature.rockwellautomation.com/idc/groups/literature/documents/du/ra-du002_-en-e.pdf.

Rockwell Automation maintains current product environmental information on its website at http://www.rockwellautomation.com/rockwellautomation/about-us/sustainability-ethics/product-environmental-compliance.page.

Allen-Bradley, LISTEN. THINK. SOLVE, Rockwell Automation, and Rockwell Software are trademarks of Rockwell Automation, Inc.
Trademarks not belonging to Rockwell Automation are property of their respective companies.

Rockwell Otomasyon Ticaret A.Ş., Kar Plaza İş Merkezi E Blok Kat:6 34752 İçerenköy, İstanbul, Tel: +90 (216) 5698400

**www.rockwellautomation.com**

**Power, Control and Information Solutions Headquarters**

Americas: Rockwell Automation, 1201 South Second Street, Milwaukee, WI 53204-2496 USA, Tel: (1) 414.382.2000, Fax: (1) 414.382.4444
Europe/Middle East/Africa: Rockwell Automation NV, Pegasus Park, De Kleetlaan 12a, 1831 Diegem, Belgium, Tel: (32) 2 663 0600, Fax: (32) 2 663 0640
Asia Pacific: Rockwell Automation, Level 14, Core F, Cyberport 3, 100 Cyberport Road, Hong Kong, Tel: (852) 2887 4788, Fax: (852) 2508 1846

Publication 836-TD001B-EN-P - August 2019
Supersedes Publication 836-TD001A-EN-P - September 2014

Copyright © 2019 Rockwell Automation, Inc. All rights reserved. Printed in the U.S.A.