Technical Data

Allen-Bradley

Limit Switches

Bulletin Numbers 801, 802DN, 802G, 802K, 802M, 802MC, 802T, 802X, 802XR, 802B, 440P

Topic	Page
801 General Purpose	2
802G Gravity Return	4
802M/802MC Pre-wired Factory Sealed	6
802R Sealed Contact	21
802T Oiltight	26
802T Safety Limit Switches (DALS)	50
802X Watertight or Hazardous Location	52
802XR Sealed Contact Hazardous Location	59
802B Compact, Precicion, and Small Precision	65
440P IEC-Style Safety Limit Switches	77
802K IEC Style Limit Switches	90

LISTEN. THINK. SOLVE.®

Allen-Bradley • Rockwell Software

Rockwell Automation

Allen Bradley 802X-A7 | gesrepair.com

801-ASA11

801-ASC17

801-CMC21

801-FSC148

801-ASC1411

Contact Arrangements & Ratings

AC
- 3 A, 120V
- 1.5 A, 240V
- 0.75 A, 480V
- 0.6 A, 600V

DC
- 1.1 A, 115V
- 0.55 A, 230V
- 0.2 A, 550V

Light Duty

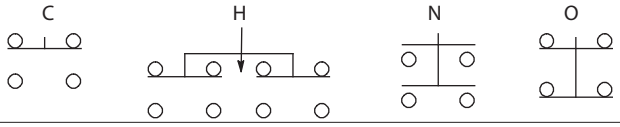

D

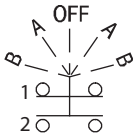

Lever Pos.	Contact Pos. 1	Contact Pos. 2
Off	C	O
A	O	O
B	O	C

F

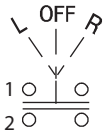

Lever Pos.	Contact Pos. 1	Contact Pos. 2
R	C	O
Off	O	O
L	O	C

G

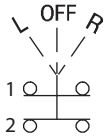

Lever Pos.	Contact Pos. 1	Contact Pos. 2
R	C	O
Off	C	C
L	O	C

K

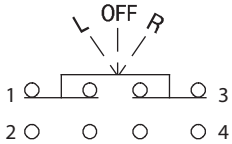

Lever Pos.	Contact Pos. 1	Contact Pos. 2	Contact Pos. 3	Contact Pos. 4
R	C	O	O	C
Off	C	O	C	O
L	O	C	C	O

AC
- 6A, 120V
- 3A, 240V
- 1.5A, 480V
- 1.2A, 600V

DC
- 2.2A, 115V
- 1.1A, 230V
- 0.4A, 550V

Standard Duty

Ambient Temperature Range

0…+40 °C (+32…+104 °F) minimum temperature based on the absence of freezing moisture or water.

Approximate Dimensions [mm (in.)]

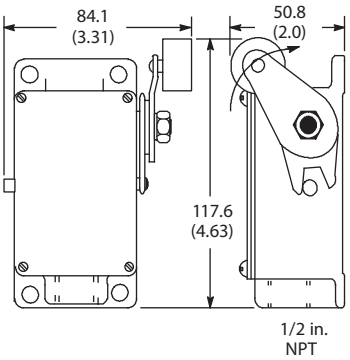

Figure 1, 18

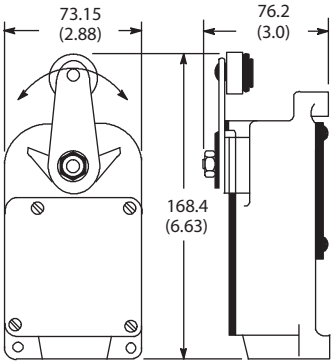

Figure 2, 3, 20

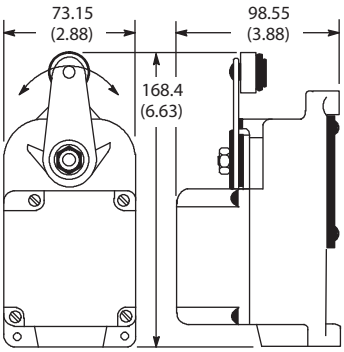

Figure 4

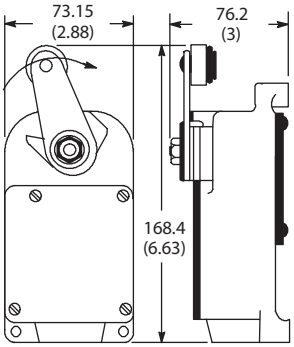

Figure 5, 6, 19

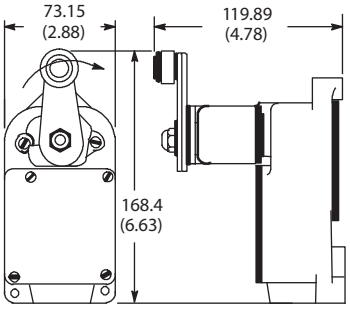

Figure 7, 8

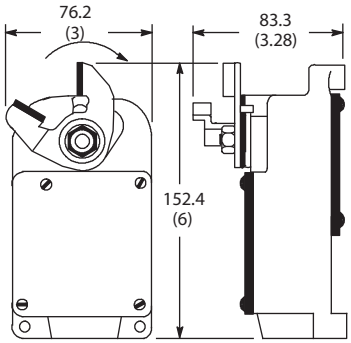

Figure 9

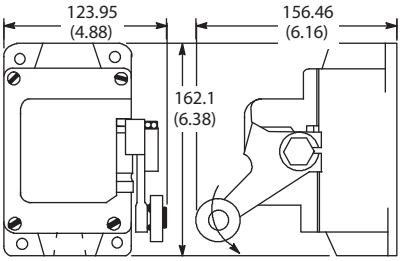

Figure 10, 11

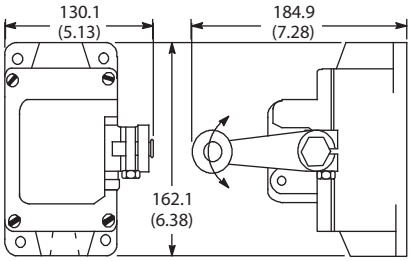

Figure 12

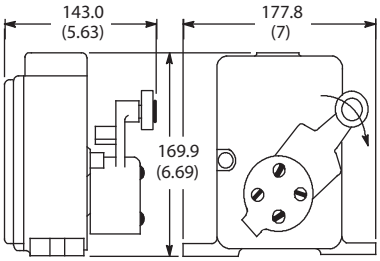

Figure 13

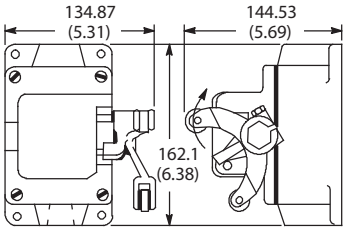

Figure 14

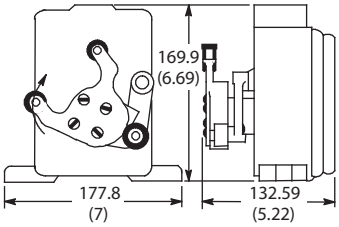

Figure 15

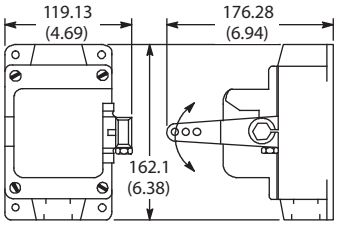

Figure 16

802G-GP with Steel Operating Lever

Slotted Shaft to Aid Adjustment

Specifications

Certifications	UL Listed, CSA Certified, and CE Marked for applicable directives
Environmental	
Enclosure Type Rating	NEMA 1
Ambient Temperature [C (F)]‡	0…110° (32…230°)

AC Contact Rating (Maximum per Pole, 50 or 60 Hz, Same Polarity)

NEMA Rating Designation	Max. AC Voltage	A		Continuous Carrying Current	VA	
		Make	Break		Make	Break
B600	120	30	3.00	5 A	3600	360
	240	15	1.50			
	480	7.5	0.75			
	600	6	0.60			

DC Contact Rating (Maximum per Pole, Same Polarity)

Voltage Range	Current Range
115…125	0.4 A
230…250	0.2 A
550…600	0.1 A

Modification for Neon Indicating Light

The Bulletin 802G gravity return limit switch can be supplied with a neon indicating light. To order, add the letter **N** for 120V AC 50/60 Hz or **N5** for 240V AC 50/60 Hz. Example: Cat. No. 802G-GP, becomes Cat. No. 802G-GPN.

The indicating light is to be internally connected by the user to two isolated terminals in the base assembly allowing complete flexibility in the connection of the light. Switches with an indicating light have a contact rating of NEMA B300.

Approximate Dimensions [mm (in.)]

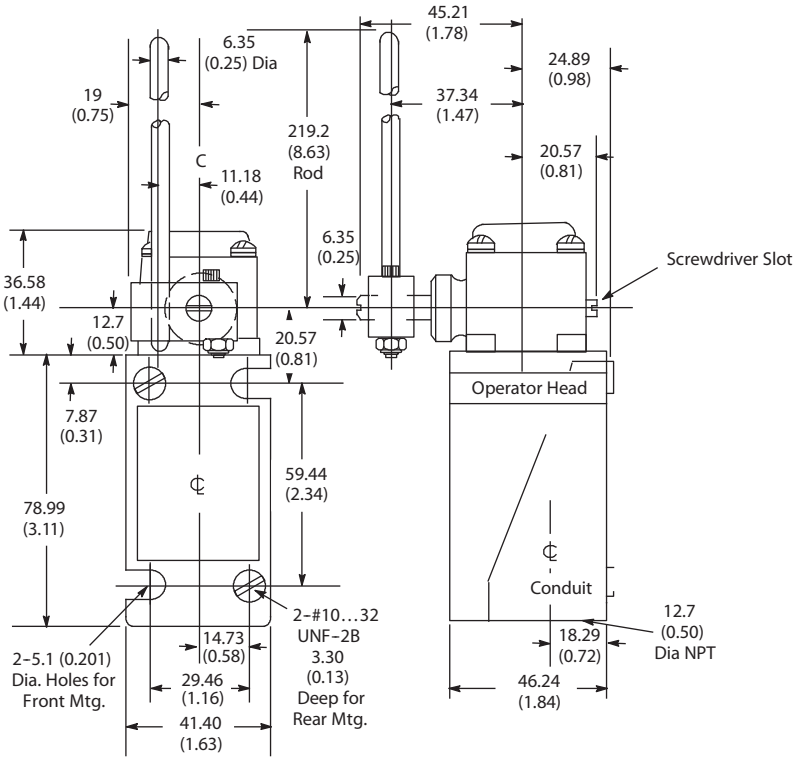

802G-GP with 802G-W10 Lever
Approximate Shipping Wt. 1.5 lb (680g)

Specifications

Certifications	UL Listed, CSA Certified, and CE Marked for application directives
Environmental	
Enclosure Type Rating	NEMA 1, 4, 6P, 13, and IP67
Pollution Degree	3
Ambient Temperature [C (F)]	0…80° (32…176°) minimum temperature based on the absence of freezing moisture or water.

AC Contact Rating (Maximum per Pole, 50 or 60 Hz, 2 Circuits Same Polarity)

NEMA Rating Designation	Max. Voltage	A		Continuous Carrying Current [A]	VA	
		Make	Break		Make	Break
A600 AC-15	120	60	6.00	10	7200	720
	240	30	3.00			
	480	15	1.50			
	600	12	1.20			

AC Contact Rating (Maximum per Pole, 50 or 60 Hz, 4 Circuits Same Polarity)

NEMA Rating Designation	Max. Voltage	A		Continuous Carrying Current [A]	VA	
		Make	Break		Make	Break
B300	120	30	3.00	5	3600	360
	240	15	1.50			

DC Contact Rating (Maximum per Pole, 2 Circuits Same Polarity)

Nominal Voltage	A	Continuous Carrying Current [A]
24	1.1	5

Range of Operation

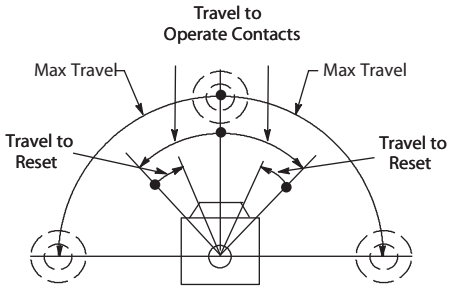

Complete Switch Without Lever

Operator Head Only

Switch Body Only

Approximate Dimensions [mm (in.)]

2-Circuit with Cat. No. 802M-W1 Lever

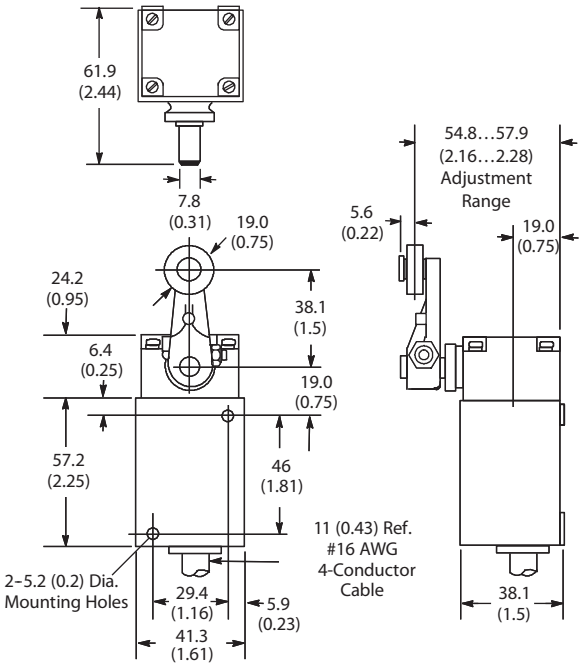

Approximate Shipping Wt.
0.53 kg (1lb 3 oz)

4-Circuit with Cat. No. 802M-W1 Lever

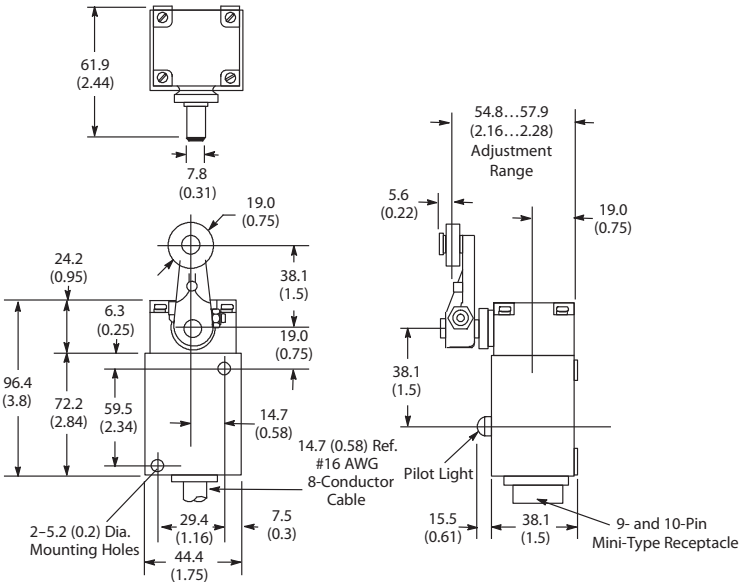

Approximate Shipping Wt.
0.9 kg (2 lb)

Note: Mounting foot adaptor as shown on [54971] is for use with 2-circuit 802M type switches only.

Range of Operation

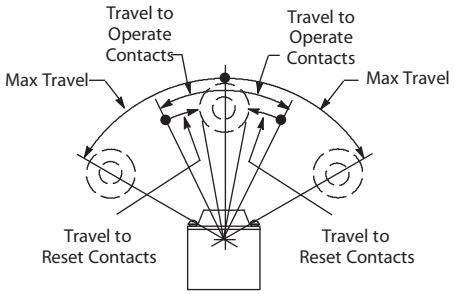

Complete Switch Without Lever

Operator Head Only

Switch Body Only

Approximate Dimensions [mm (in.)]

4-Circuit with Cat. No. 802M-W1 Lever

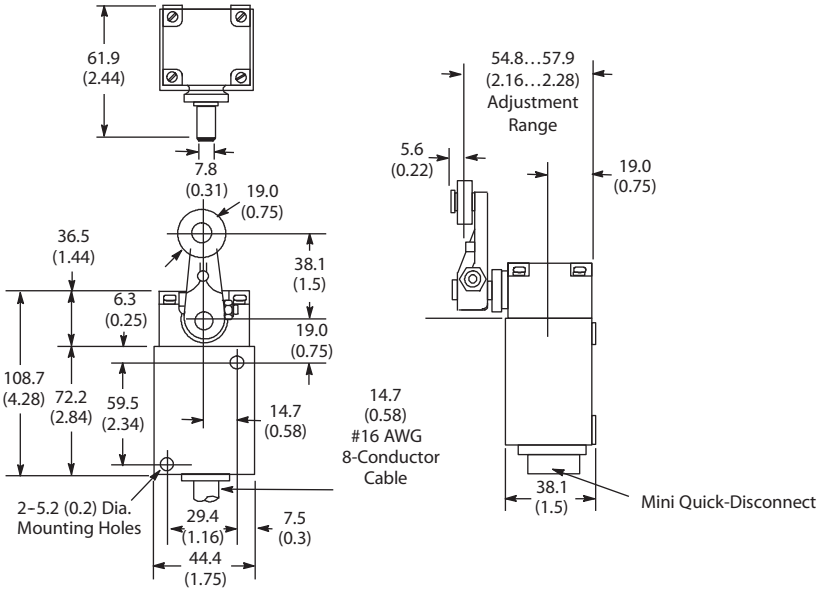

Approximate Shipping Wt.
0.9 kg (2 lb)

Note: Mounting foot adaptor as shown on [54971] is for use with 2-circuit 802M type switches only.

Range of Operation

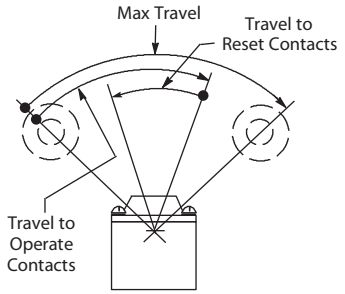

Complete Switch Without Lever

Operator Head Only

Switch Body Only

Approximate Dimensions [mm (in.)]

2-Circuit with Cat. No. 802M-W1 Lever

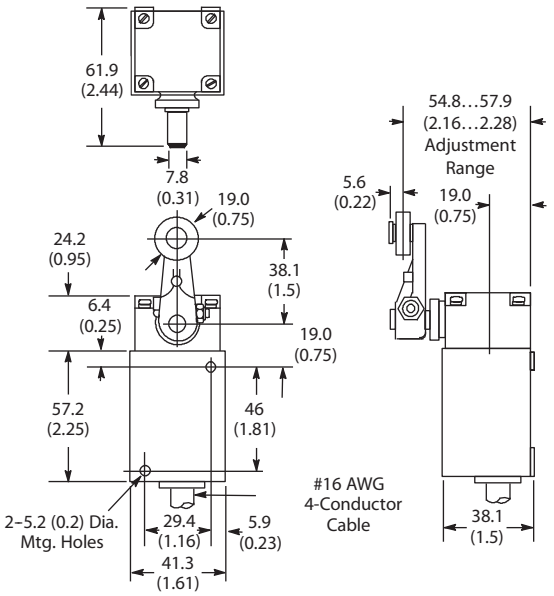

Approximate Shipping Wt. 0.53 kg (1lb 3 oz)

4-Circuit with Cat. No. 802M-W1 Lever

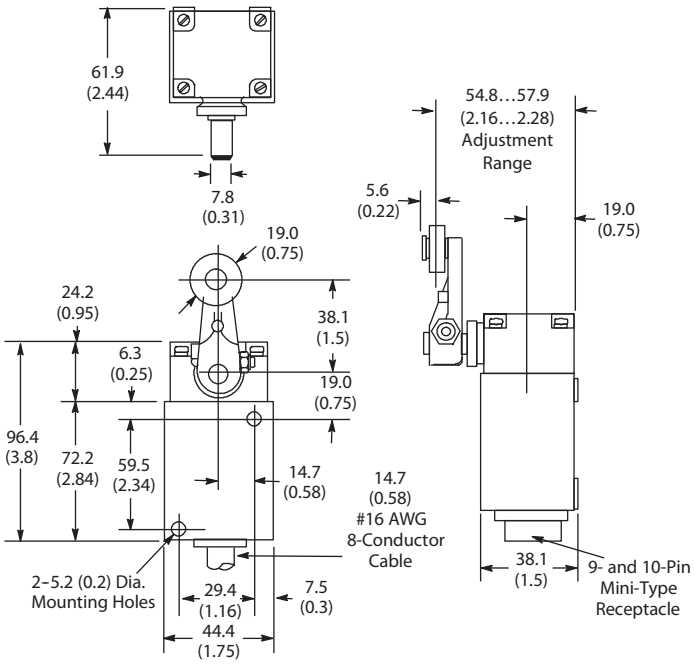

Approximate Shipping Wt. 0.9 kg (2 lb)

802M Lever Type Sequential • Spring Return

Pre-wired—Factory Sealed Switches

Range of Operation

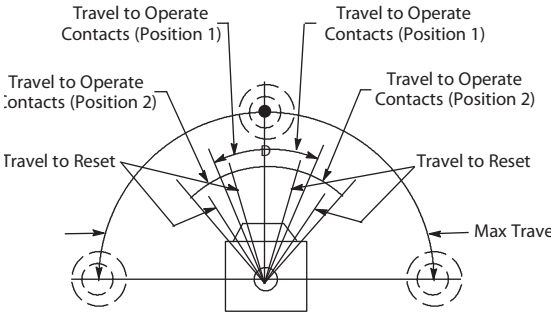

Complete Switch Without Lever

Operator Head Only

Switch Body Only

Approximate Dimensions [mm (in.)]

4-Circuit with Cat. No. 802M-W1 Lever

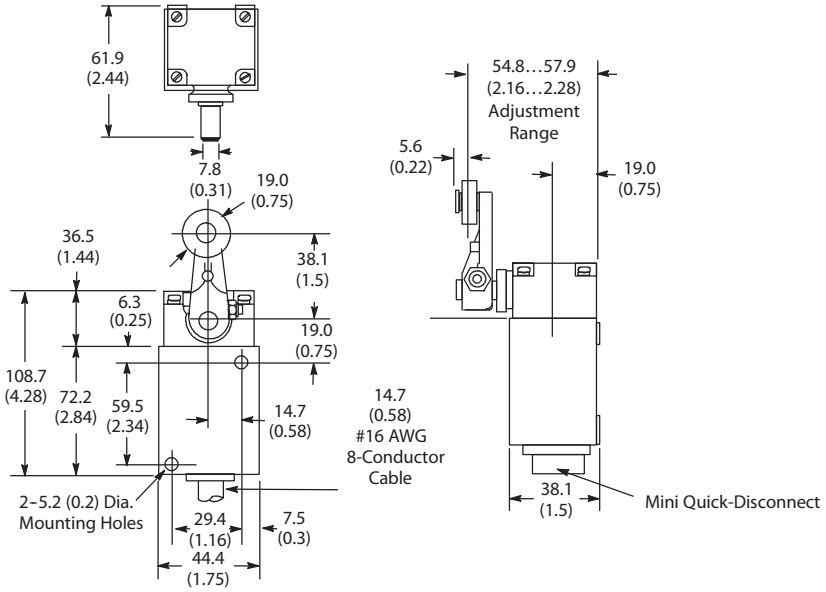

Approximate Shipping Wt.
0.9 kg (2 lb)

Note: Mounting foot adaptor as shown on [54971] is for use with 2-circuit 802M type switches only.

Range of Operation

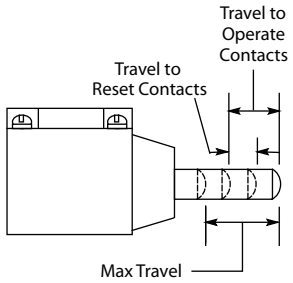

Switch Body Only

Adjustable Top Push Rod Switch and Head

Adjustable Side Push Rod Switch and Head

Top Push Rod Head

Side Push Rod Head

Top Push Roller Head

Side Push Vertical Roller Head

Side Push Horizontal Roller Head

Approximate Dimensions [mm (in.)]

Side Push Types

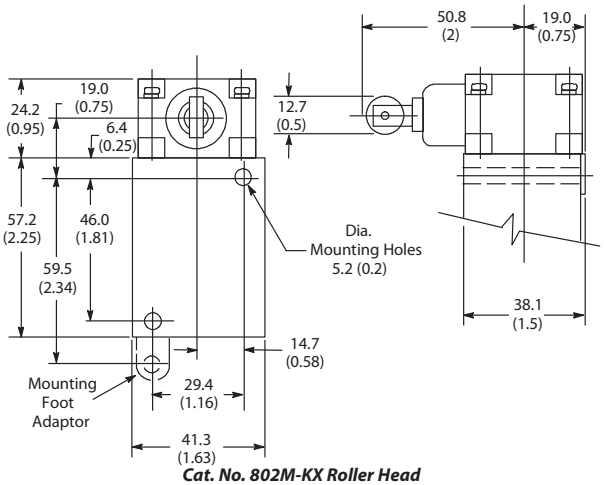

Cat. No. 802M-KX Roller Head
Shipping Wt. 0.53 kg (1 lb 3 oz)

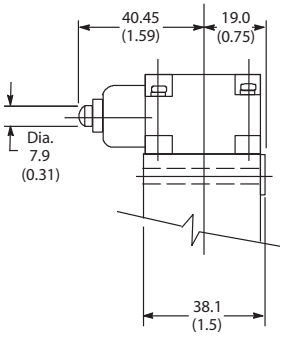

Cat. No. 802M-CX Rod Head
Shipping Wt. 0.53 kg (1 lb 3 oz)

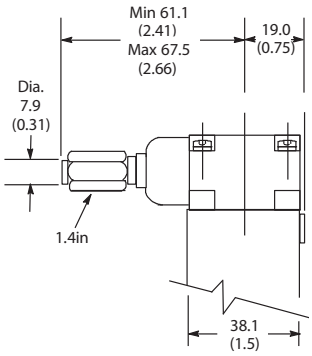

Cat. No. 802M-CAFX Adjustable Head
Shipping Wt. 0.53 kg (1 lb 3 oz)

Top Push Types

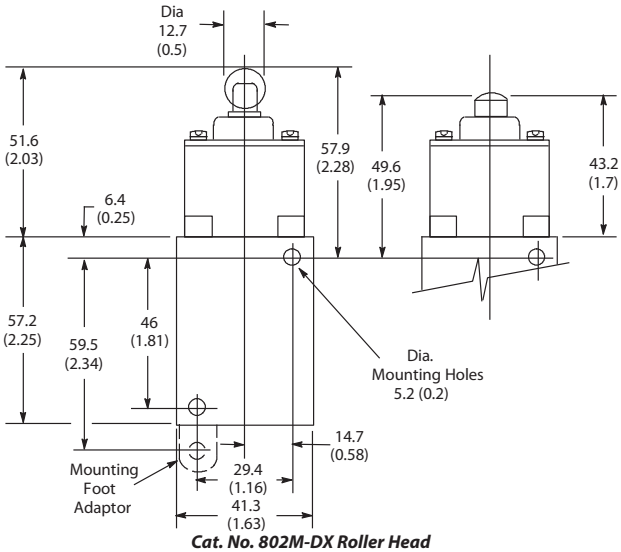

Cat. No. 802M-DX Roller Head
Shipping Wt. 0.53 kg (1 lb 3 oz)

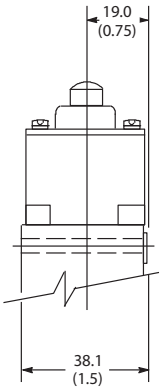

Cat. No. 802M-BX Rod Head
Shipping Wt. 0.53 kg (1 lb 3 oz)

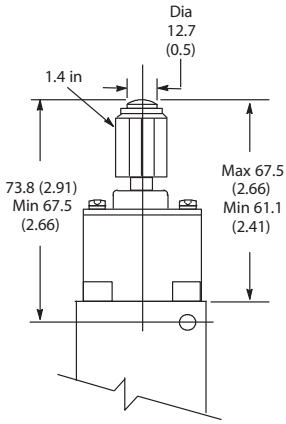

Cat. No. 802M-BAX Adjustable Head
Shipping Wt. 0.53 kg (1 lb 3 oz)

802M Wiring Diagrams for 2-Circuit Models

Pre-wired—Factory Sealed Switches

Two-Circuit Cable Models

(See Applicable Codes & Laws)

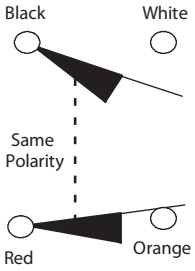

Two-Circuit Cable Models with One Indicating Light

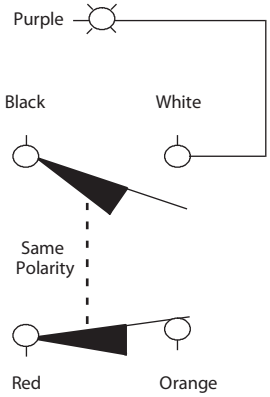

Light Wired to N.O. (White) Wire

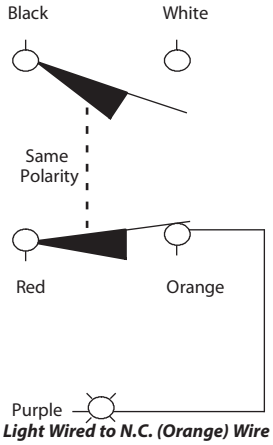

Light Wired to N.C. (Orange) Wire

Two-Circuit 5-Pin Mini-Type Receptacle

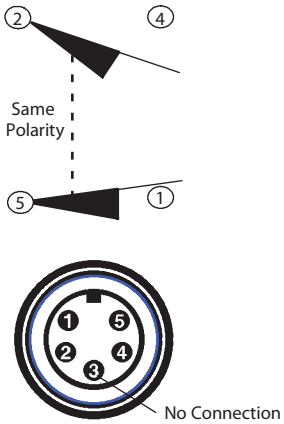

J1 Wiring

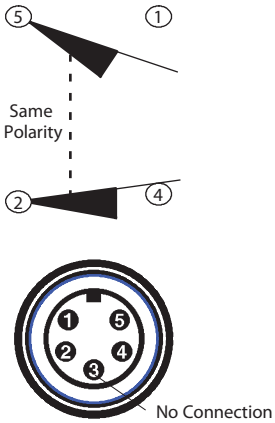

J9 Wiring

Two-Circuit Five-Pin Mini-Type Receptacle with One Indicating Light

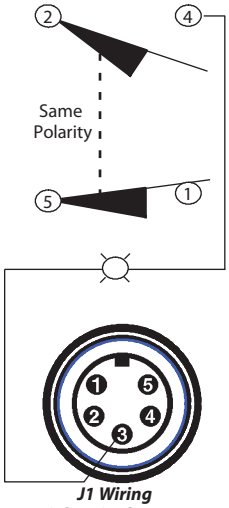

J1 Wiring
Light Wired to N.O.

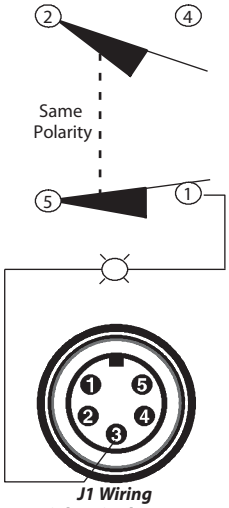

J1 Wiring
Light Wired to N.C.

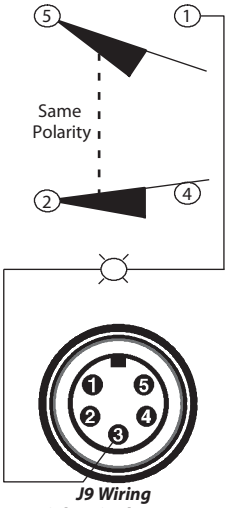

J9 Wiring
Light Wired to N.O.

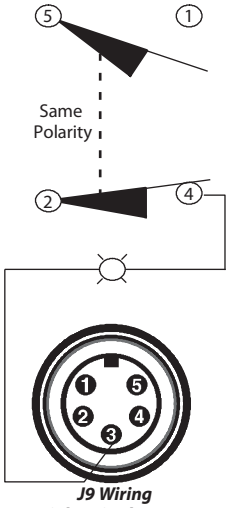

J9 Wiring
Light Wired to N.C.

Two-Circuit Four-Pin Micro-Type Receptacle (DC only)

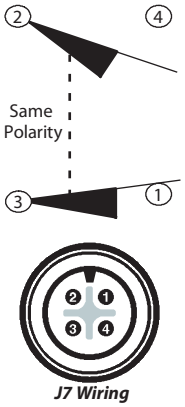

J7 Wiring

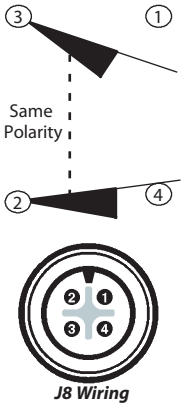

J8 Wiring

Two-Circuit Five-Pin Micro-Type Receptacle (DC only)

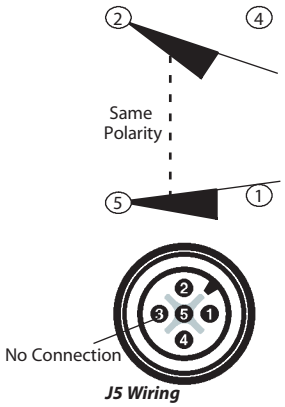

J5 Wiring

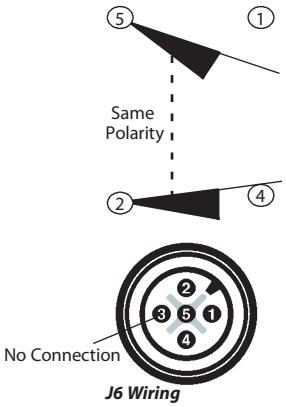

J6 Wiring

802M Wiring Diagrams for 4-Circuit Models

Pre-wired—Factory Sealed Switches

Cable Models

(See Applicable Codes & Laws)

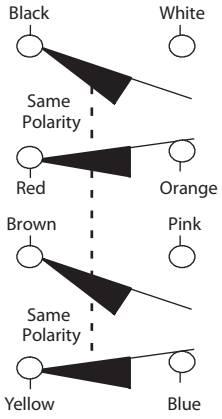

Neutral Position with Cable

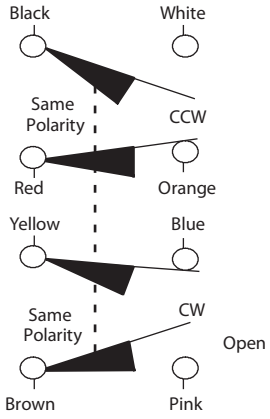

Sequential with Cable

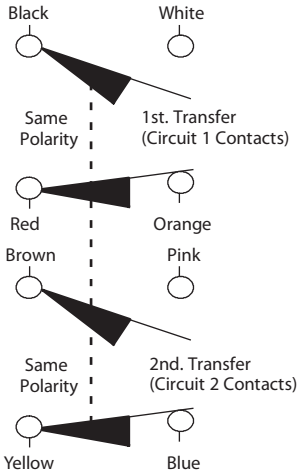

Cable Models with Two Indicating Lights

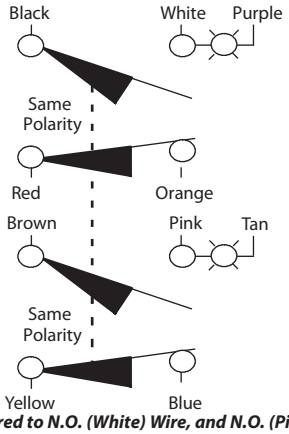

Light Wired to N.O. (White) Wire, and N.O. (Pink) Wire

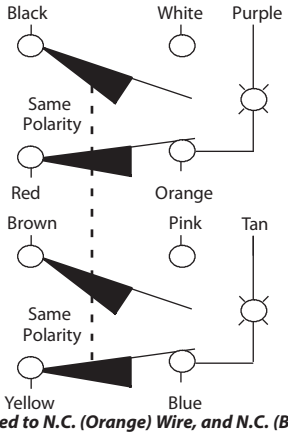

Light Wired to N.C. (Orange) Wire, and N.C. (Blue) Wire

Nine-Pin Mini-Type Receptacle

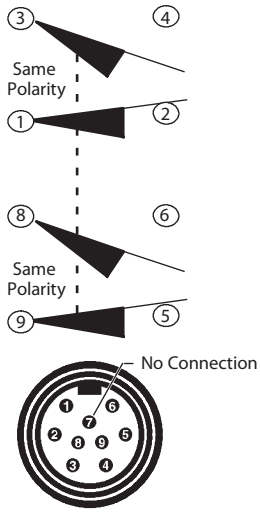

J1 Wiring

Ten-Pin Mini-Type Receptacle with Two Indicating Lights

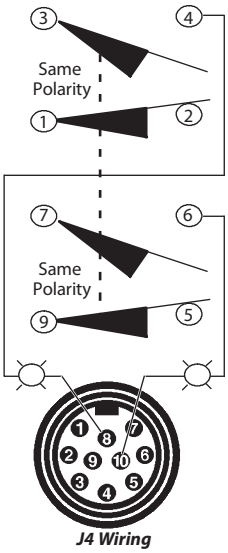

J4 Wiring
Light Wired to N.O.

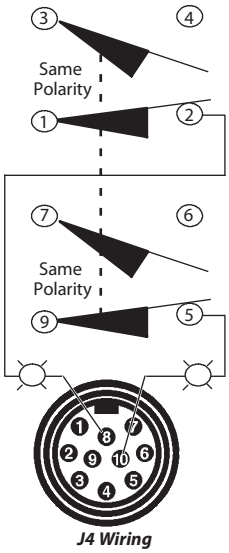

J4 Wiring
Light Wired to N.C.

24V DC Switches

All two-circuit Bul. 802M limit switches are available with silver-nickel contacts rated for 24V DC applications. To order a switch rated for 24V DC use, insert the letter **Z** before the cable or connector designation. Example: Cat. No. 802M-A**Z**Y5 is a 24V DC version of the 802M-AY5. The use of the 24V DC micro connector option or 24V DC indicating light option require the switch be rated for 24V DC operation. Silver-nickel contacts are not available with four-circuit models.

Extended Cable Lengths

The factory installed type STO cable is normally supplied in 1.52 m (5 ft) lengths. Extended cable lengths are available in multiples of four feet. To order, replace the suffix **Y5** in the cat. no. with the appropriate suffix from the table below. Example: To order a lever type two-circuit spring return switch with 1.83 m (8 ft) of STO cable the cat. no. would be 802M-A**Y8**. Cable lengths up to 96 feet are available as a special order.

Additional Cable Lengths

Modifications	Cat. No. Suffix
1.83 m (8 ft) Cable	Y8
3.66 m (12 ft) Cable	Y12
4.78 m (16 ft) Cable	Y16

♠ A 5-pin, 9-pin, or 10-pin plug-in receptacle is supplied to facilitate retrofitting existing installations. The normal ground wire pin is not required and is not connected inside the switch.

‡ STO is a common identification of this cable. The more complete identification of the cable used on the Bulletin 802M is STOOW which incorporates an oil resistant jacket and conductor insulation, for indoor and outdoor use.

Five-Pin Mini-Type Receptacle ♠ (Two-Circuit Models Only)

802M with Mini-Type Receptacle 2-Circuit

To order a Bulletin 802M pre-wired limit switch with a 5-pin mini connector in place of the 1.52 m (5 ft) of STO ‡ cable, replace the **Y5** in the cat. no. with the suffix **J1** or **J9** depending on the wiring configuration required. Maximum voltage rating for this receptacle is 250V AC.

An appropriate female connector with cable (Cat. No. 889N-F5AFC-6F) is available.

Nine-Pin Mini-Type Receptacle ♠ (Four-Circuit Models without Indicator Lights Only)

802M with Mini-Type Receptacle 4-Circuit

To order a Bulletin 802M pre-wired limit switch with a 9-pin mini connector in place of the 1.52 m (5 ft) of STO ‡ cable, replace the **Y5** in the cat. no. with the suffix **J1**. Maximum voltage rating for this receptacle is 250V AC.

An appropriate female connector with cable (Cat. No. 889N-F9AF-2) is available .

Ten-Pin Mini-Type Receptacle ♠ (Four-Circuit Models with Two Indicating Lights Only)

To order a Bulletin 802M pre-wired limit switch with a 10-pin mini connector and two indicating lights, replace the **Y5** in the cat. no. with the suffix **J4**. Maximum voltage rating for this receptacle is 250V AC. Also, specify the indicating lights per the table on [T-11640459].

Example: Cat. No. 802M-AT**Y5** with mini-connector and (2) 120V AC indicating lights wired to one side of each N.O. contact would be Cat. No. 802M-AT**J4**L1F.

An appropriate female connector with cable (Cat. No. 889N-F10AF-2) is available on [T-12064388].

Four-Pin Micro-Type Receptacle (Two-Circuit 24V DC Models Only)

802M with Micro-Type Receptacle 2-Circuit

To order a Bulletin 802M pre-wired limit switch with a 4-pin micro connector in place of the 1.52 m (5 ft) of STO ‡ cable, replace the **Y5** in the cat. no. with the suffix **J7** or **J8** depending upon the wiring configuration required. This option requires that the switch is rated 24V DC.

An appropriate female connector with cable (Cat. No. 889D-F4AC-2) is available.

Five-Pin Micro-Type Receptacle (Two-Circuit 24V DC Models Only)

To order a Bulletin 802M pre-wired limit switch with a 5-pin micro connector in place of the 1.52 m (5 ft) of STO ‡ cable, replace the **Y5** in the cat. no. with the suffix **J5** or **J6** depending upon the wiring configuration required. This option requires that the switch is rated 24V DC.

An appropriate female connector with cable (Cat. No. 889D-F5AC-2) is available.

802M Modifications

Pre-wired—Factory Sealed Switches

Indicating Lights

802M with Indicating Light
2-Circuit

802M with Indicating Light
4-Circuit

Two-Circuit—Bulletin 802M pre-wired limit switches can be supplied with an indicating light which is wired to one side of either the N.O. or N.C. contact. The second lead of the light is available as a fifth conductor for wiring flexibility. See page 12 for wiring diagrams.

To order, add the appropriate suffix listed in the table to the right to the cat. no. Example: Cat. No. 802M-AY5 with a 120V AC LED indicating light wired to one side of the N.O. contact would be Cat. No. 802M-AY5L**1F**.

Example: Cat. No. 802M-AY5 with mini-connector and 120V AC indicating light wired to one side of the N.O. contact would be Cat. No. 802M-AJ1**L1F**.

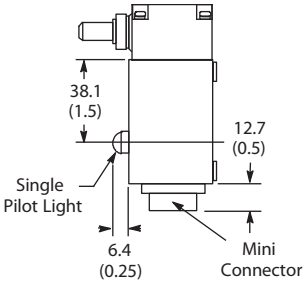

Four-Circuit—Bulletin 802M pre-wired limit switches can be supplied with 2 indicating lights wired to one side of each N.O. or N.C. contact of the 4-circuit contact block. Second leads from each light are available as ninth and tenth conductors for wiring flexibility. See [T-11640062] for wiring diagram.

To order, add the appropriate suffix listed in the table to the right to the cat. no.

Example: Cat. No. 802M-ATY5 with 120V AC LED indicating lights wired to one side of each N.C. contact would be Cat. No. 802M-ATY5**L1C**.

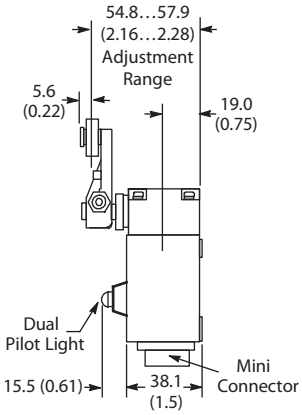

LED Indicating Lights		
Voltage	**Wired to §**	**Cat. No. Suffix**
24V DC ♣	N.O. Contact	LF
	N.C. Contact	LC
120V AC 50…60 Hz	N.O. Contact	L1F
	N.C. Contact	L1C
Neon Indicating Lights		
Voltage	**Wired to §**	**Cat. No. Suffix**
120V AC 50…60 Hz	N.O. Contact	NF
	N.C. Contact	NC
240V AC 50…60 Hz	N.O. Contact	N5F
	N.C. Contact	N5C

Fitting for Liquid-Tight Flexible Metal Conduit

Bul. 802M 2-circuit switches can be obtained provided with a fitting for liquid-tight flexible metal conduit (flexible metal conduit not provided) and a pigtail for wiring. Add the following suffix to the cat. no. (underscore indicate pigtail length):

GS_ straight-out fitting

GF_ front oriented 90° elbow fitting

GL_ left oriented 90° elbow fitting

GB_ back oriented 90° elbow fitting

GR_ right oriented 90° elbow fitting.

Example: GS5 = 5 foot long pigtail. Additional cable length over 1.5 m (5 ft) is available in multiples of 1.2 m (4 ft).

§ See Wiring Diagrams on page 14.
♣ Requires the switch be rated for 24V DC operation. (Not available with four-circuit models.)

Specifications

Certifications	UL Listed, CSA Certified, and CE Marked for application directives
Environmental	
Enclosure Type Rating	NEMA 1, 4X, 6P, 13; IP69K and IP66/67 (IEC 529)
Pollution Degree	3
Ambient Temperature [C (F)]‡	0…80° (32…176°)

AC Contact Rating (Maximum per Pole, 50 or 60 Hz, 2 Circuits Same Polarity)

NEMA Rating Designation	Max. Voltage	A		Continuous Carrying Current [A]	VA	
		Make	Break		Make	Break
A600 AC-15	120	60	6.00	10	7200	720
	240	30	3.00			
	480	15	1.50			
	600	12	1.20			

DC Contact Rating (Maximum per Pole, 2 Circuits Same Polarity)

Nominal Voltage	A	Continuous Carrying Current [A]
24	1.1	5

‡ Minimum temperature is based on the absence of freezing moisture or water.

Range of Operation

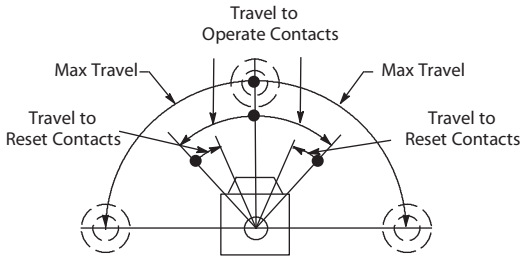

Complete Switch without Lever

Operator Head Only

Base Only

Approximate Dimensions [mm (in.)]

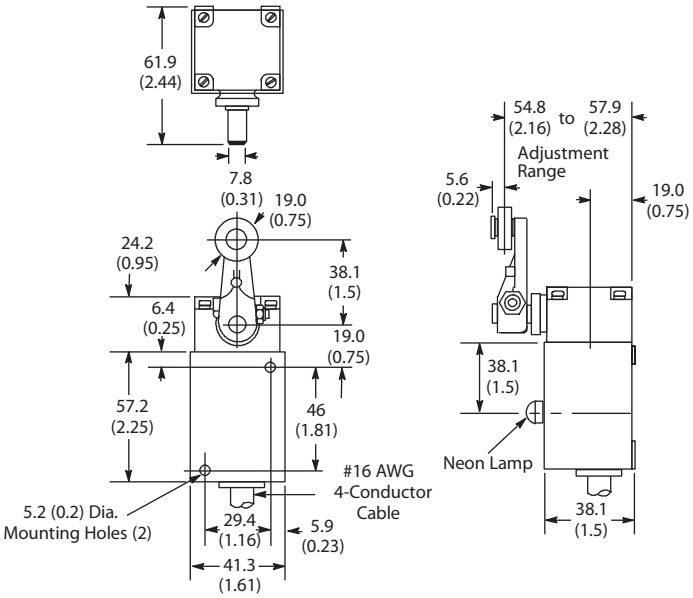

Approximate Shipping Wt.
0.9 kg (2 lb)

Cable Models

(See Applicable Codes & Laws)

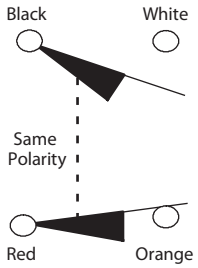

Cable Models with Indicating Light

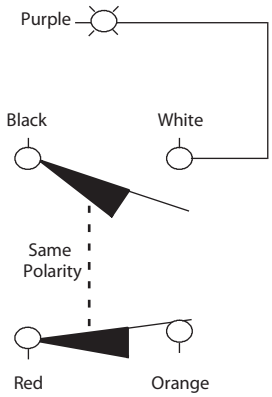

Light Wired to N.O. (White) Wire

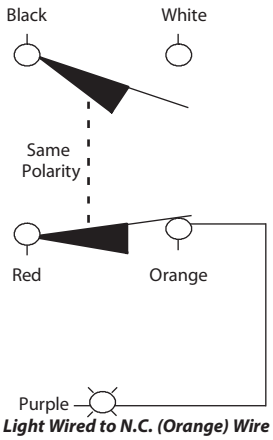

Light Wired to N.C. (Orange) Wire

Five-Pin Mini-Type Receptacle

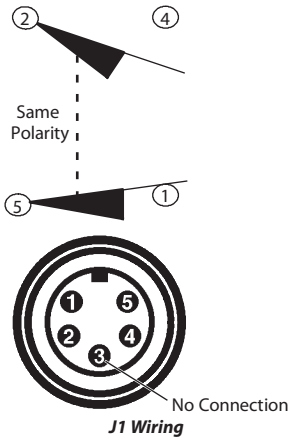

J1 Wiring

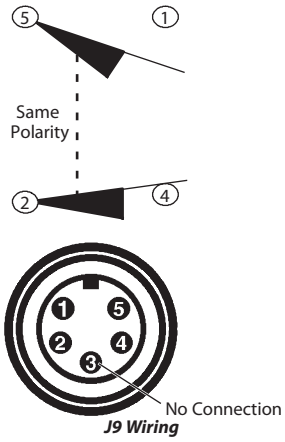

J9 Wiring

Five-Pin Mini-Type Receptacle with Indicating Light

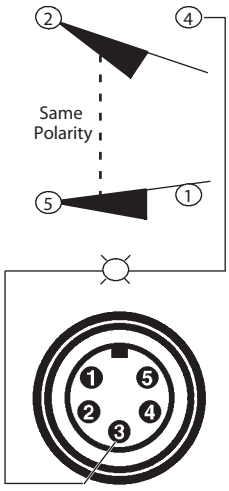

J1 Wiring
Light Wired to N.O.

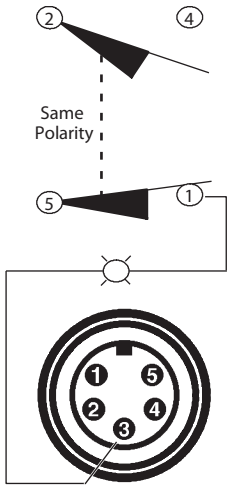

J1 Wiring
Light Wired to N.C.

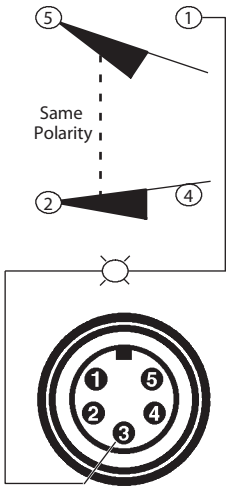

J9 Wiring
Light Wired to N.O.

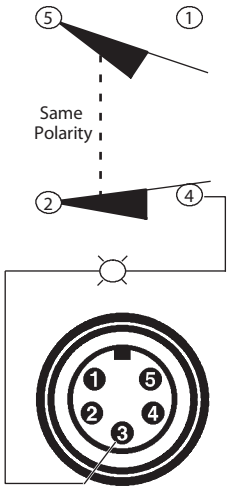

J9 Wiring
Light Wired to N.C.

802MC Modifications

Corrosion-resistant Pre-wired—Factory Sealed Switches

Indicating Light

Neon Indicating Light

Bulletin 802MC pre-wired limit switches can be supplied with an indicating light wired to one side of either the N.O. or N.C. contact. The second lead of the light is available as a fifth conductor for wiring flexibility.

To order, add the appropriate suffix listed in the table below to the cat. no. Example: Cat. No. 802MC-AY5 with a 120V AC LED indicating light wired across the N.O. contact would be Cat. No. 802MC-AY5**L1F**.

LED Indicating Lights		
Voltage	**Wired to**	**Cat. No. Suffix**
24V DC	N.O. Contact	LF
	N.C. Contact	LC
120V AC 50…60 Hz	N.O. Contact	L1F
	N.C. Contact	L1C
Neon Indicating Lights		
Voltage	**Wired to**	**Cat. No. Suffix**
120V AC 50…60 Hz	N.O. Contact	NF
	N.C. Contact	NC
240V AC 50…60 Hz	N.O. Contact	N5F
	N.C. Contact	N5C

Five-Pin Mini-Type Receptacle ‡ (Two-Circuit Contact Block)

5-Pin Mini-Type Receptacle

To order a Bulletin 802MC pre-wired limit switch with a 5-pin mini connector in place of the 1.52 m (5 ft) of STO Δ cable, replace the **Y5** in the cat. no. with the suffix **J1** or **J9** depending upon the wiring configuration required. Maximum voltage rating for this receptacle is 250V AC.

An appropriate female connector with cable (Cat. No. 889N-F5AFC-6F) is available on [T-12061297].

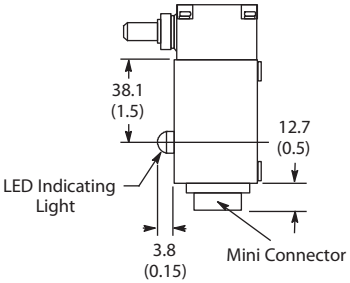

‡ A 5-pin mini-type receptacle is supplied to facilitate retrofitting existing installations. The normal ground wire pin is not required and is not connected inside the switch.

Δ STO is a common identification of this cable. The more complete identification of the cable used on the Bulletin 802M is STOOW which incorporates an oil resistant jacket and conductor insulation, for indoor and outdoor use.

Extended Cable Lengths

The factory installed pre-wired, type STO cable is normally supplied in 1.52 m (5 ft) lengths. Extended cable lengths are available in multiples of 4 feet. To order, replace the suffix **Y5** in the cat. no. with the appropriate suffix from the table below. Example: To order a lever type spring return switch with 1.83 m (8 ft) of STO cable the cat. no. would be Cat. No. 802MC-A**Y8**. Cable lengths up to 96 feet are available as a special order.

Additional Cable Lengths

Modification	Cat. No. Suffix
1.83 m (8 ft) cable	LF
3.66 m (12 ft) cable	Y12
4.78 m (16 ft) cable	Y16

Two-Circuit 24V DC Switches

All 2-circuit Bul. 802MC limit switches are available with silver-nickel contacts and rated for 24V DC applications. To order a switch rated for 24V DC use, insert the letter **Z** before the cable or connection designation. Example: Cat. No. 802MC-AZY5 is a 24V DC version of Cat. No. 802MC-AY5. The use of the 24V DC pilot light option requires the switch be rated for 24V DC operation.

Sealed Contact Switch

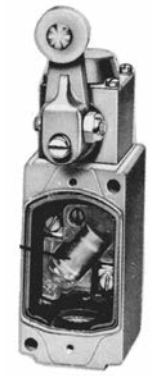

802R-AF (cover removed) with 802T-W1 Lever

802R-AF without Lever

Specifications

Certifications	UL Listed and CSA Certified
Environmental	
Enclosure Type Rating	NEMA 13
Ambient Temperature [C (F)]	-29…+121 ° (-20…+250 °) Exception: Wobble stick & cat whisker devices are rated -18…+54 ° (0…130 °)

AC Contact Rating (Maximum per Pole, 50 or 60 Hz, 2 Circuits Same Polarity)

NEMA Rating Designation	Max. Voltage	A		Continuous Carrying Current [A]	VA	
		Make	Break		Make	Break
B600	120	30	3.00	5	3600	360
	240	15	1.50			
	480	7.5	0.75			
	600	6	0.60			

DC Contact Rating (Maximum per Pole, Same Polarity)

NEMA Rating Designation	Voltage Range	Current Rating
P300	115…125 230…250	1.1 A 0.55 A

Range of Operation

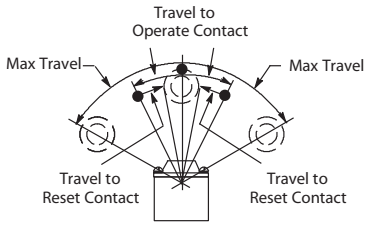

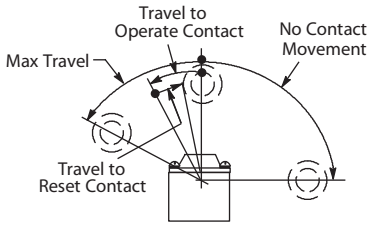

802R-AF without Lever

802R-ALFW5

Approximate Dimensions [mm (in.)]

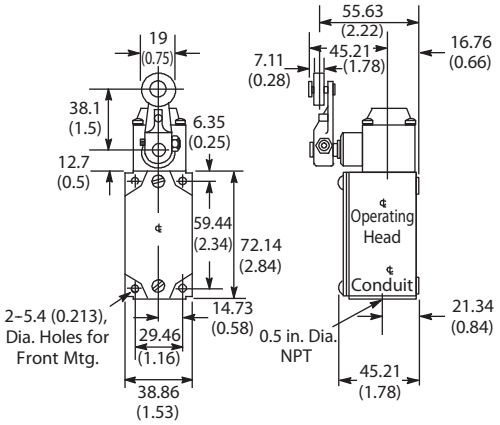

Standard Switch with 802T-W1 Lever
Shipping Wt. 0.35 kg (12.5 oz)

Note: Details regarding wiring Allen-Bradley limit switches to Allen-Bradley PLCs can be found in publications 802T-4.0, -4.1, -4.2, and -4.3.

Range of Operation

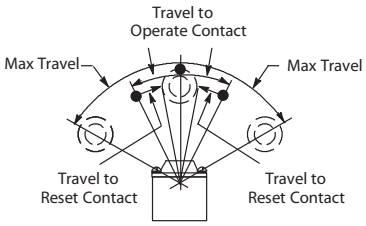

Switch without Lever

Approximate Dimensions [mm (in.)]

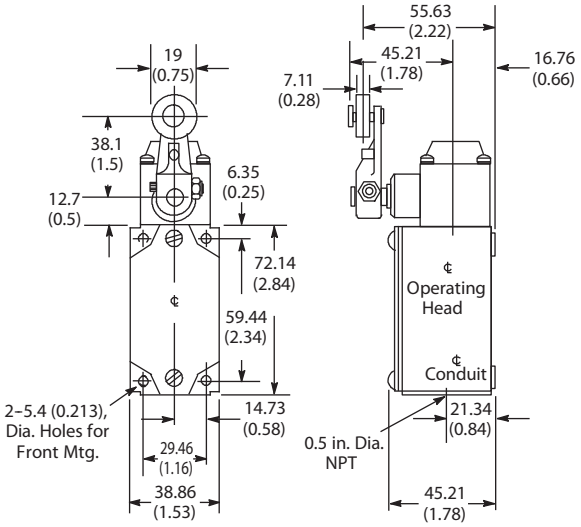

Standard Switch with 802T-W1 Lever
Shipping Wt. 0.35 kg (12.5 oz)

Range of Operation

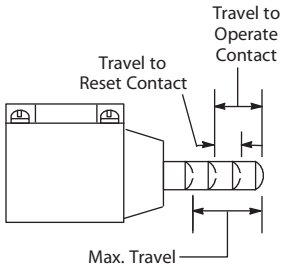

Top Push Rod

Adjustable Top Push Rod

Side Push Rod

Top Push Roller

Side Push Roller

Approximate Dimensions [mm (in.)]

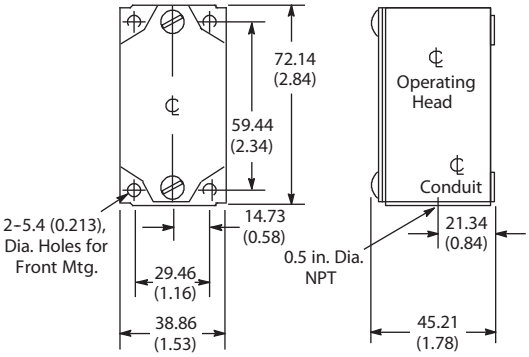

Standard Switch
Shipping Wt. 0.35 kg (12.5 oz)

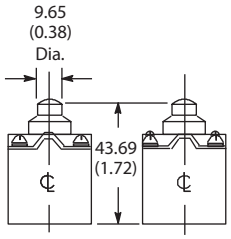

Z-36615
Top Push Rod Head
Shipping Wt. 0.12 kg (4.25 oz)

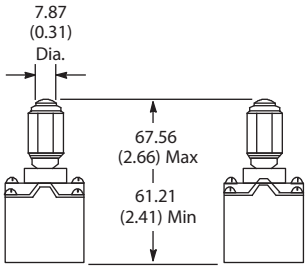

40182-022-52
Adjustable Top Push Rod Head
Shipping Wt. 0.12 kg (4.25 oz)

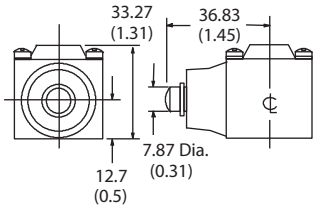

Z-36616
Side Push Rod Head
Shipping Wt. 0.12 kg (4.25 oz)

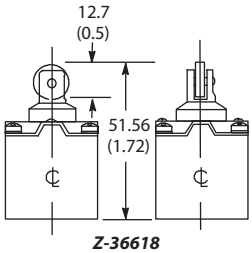

Z-36618
Top Push Roller Head
Shipping Wt. 0.12 kg (4.25 oz)

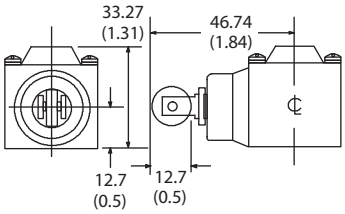

Z-36622
Side Push Vertical Roller Head
Shipping Wt. 0.12 kg (4.25 oz)

Range of Operation‡

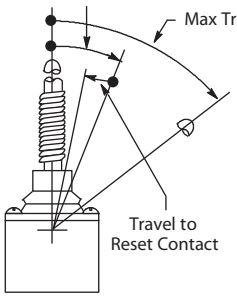

Wire Wobble Stick

Cat Whisker

Approximate Dimensions [mm (in.)]

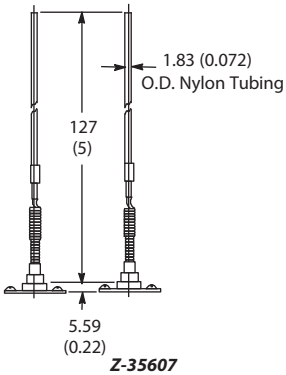

Z-35607
Cat Whisker Head
Shipping Wt. 0.3 kg (1 oz)

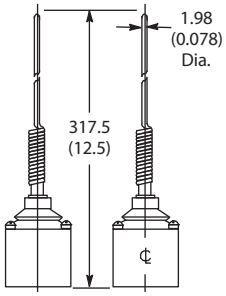

Z-35617
Wire Wobble Stick Head
Shipping Wt. 0.17 kg (6 oz)

Modification for Transparent Cover

Switches can be furnished with a gasketed, transparent plastic cover. This modification enables the electrician to inspect terminal wiring without removing the switch cover. To order, add the letter **Z** to the cat. no. of the standard switch. Example: Cat. No. 802R-DF becomes Cat. No. 802R-DF**Z**.

Conduit Seal (Cat. No. 802T-N3)

A synthetic rubber conduit seal is available to protect the conduit opening against the ingress of oil into the wiring compartment. Each wire hole in the seal has a thin inner wall which is pierced when a wire is passed through. Thus, any unused opening remains sealed.

Special Conduit Lock Nut (Cat. No. 802T-X4)

This option, a "Tru-Seal" lock nut with threaded PTFE insert, is a valuable accessory for any Bulletin 802R which is connected by means of conduit.

NPT to Metric Thread Adaptor

Brass 1/2-inch NPT thread to M20 thread adapter. Used with metric cable glands where conduit entry switch has American NPT tapered threads. Compatible with all 1/2-inch NPT conduit entry limit switches, this adapter is valuable accessory for any bulletin requiring conduit entry conversion to be compatible with metric thread.

Description	Cat. No.
Conduit Adapter 1/2-inch NPT to M20 metric thread	802T-X5

Specifications

Certifications	UL Listed, CSA Certified, and CE Marked for applicable directives
Environmental	
Enclosure Type Rating	NEMA 4, 13, 6P★, and IP67
Pollution Degree	3
Ambient Temperature [C (F)]‡	-18…+110° (0…+230°) Exception: Wobble stick and cat whisker devices are rated from -18…+54° (0…+130°)

AC Contact Rating (Maximum per Pole, 50 or 60 Hz, 2 Circuits Same Polarity)

NEMA Rating Designation	Max. Voltage	A		Continuous Carrying Current	VA	
		Make	Break		Make	Break
A600 AC-15	120	60	6.00	10	7200	720
	240	30	3.00			
	480	15	1.50			
	600	12	1.20			
B600§ AC-15	120	30	3.00	5	3600	360
	240	15	1.50			
	480	7.5	0.75			
	600	6	0.60			

AC Contact Rating (Maximum per Pole, 50 or 60 Hz, 4 Circuits Same Polarity)

NEMA Rating Designation	Max. Voltage	A		Continuous Carrying Current	VA	
		Make	Break		Make	Break
A300	120	60	6.00	10	7200	720
	240	30	3.00			

DC Contact Rating (Maximum per Pole)

Circuits	Voltage Range	Current Range
2	115…125 230…250 550…600	0.4 A 0.2 A 0.1 A
4	115…125 230…250	0.4 A 0.2 A

Range of Operation

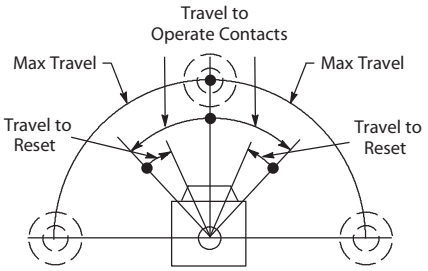

Lever Operation with Standard Levers

Switch without Lever

Switch without Lever and Base

Approximate Dimensions [mm (in.)]

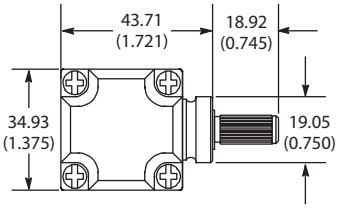

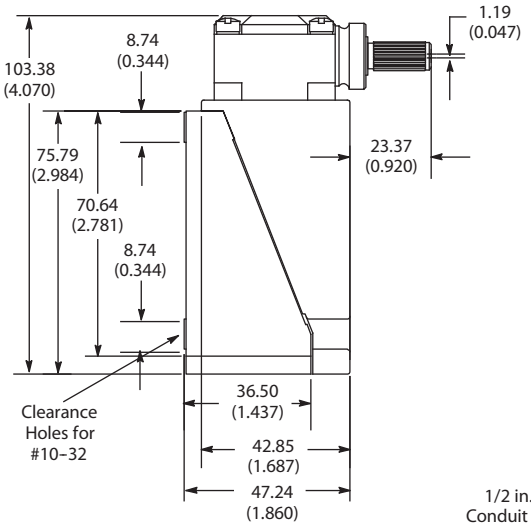

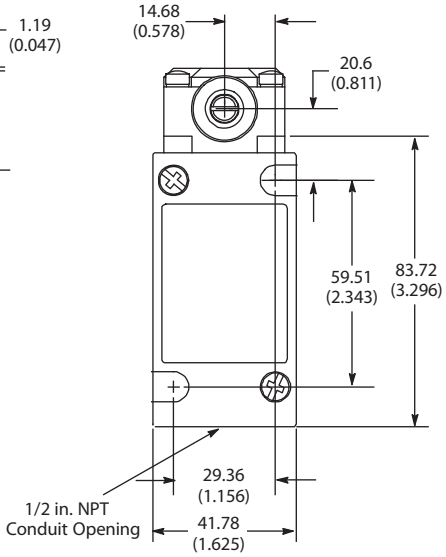

Plug-in Switch
Shipping Wt. 0.57 1 kg (1.25 lb)

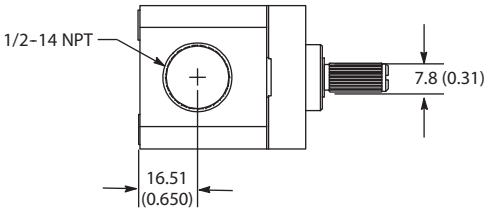

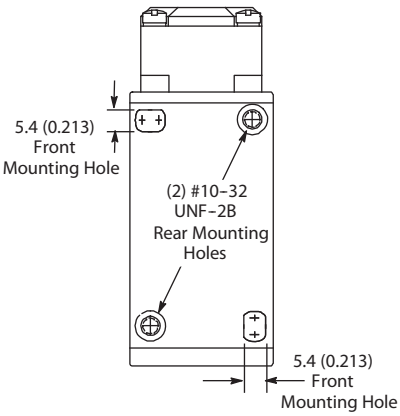

802T Lever Type • Maintained Contact and Neutral Position

Plug-in Style Oiltight Switches

Range of Operation

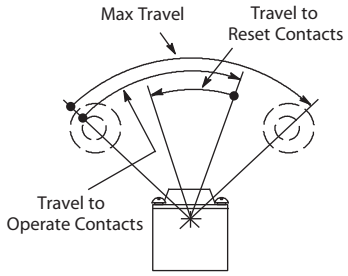

Maintained Contact Models

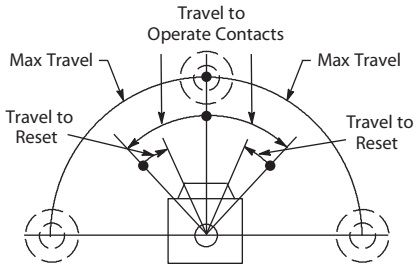

Natural Position Models

Switch without Lever

Switch without Lever and Base

Approximate Dimensions [mm (in.)]

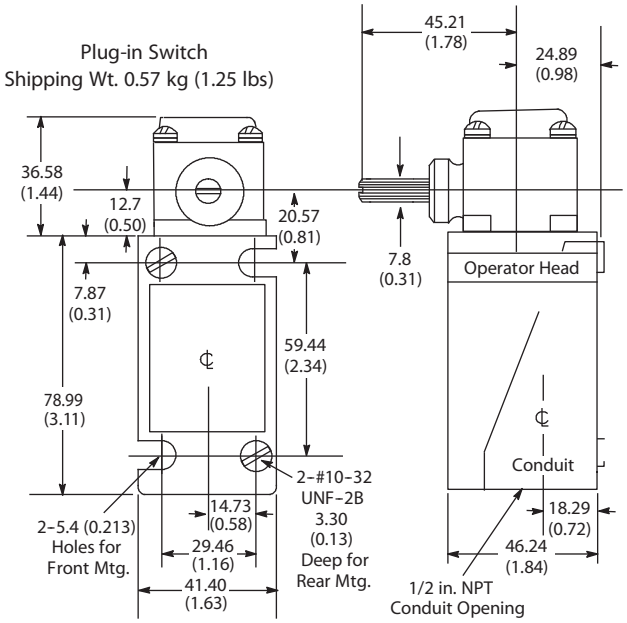

Range of Operation

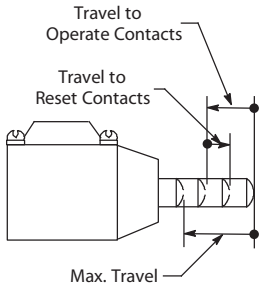

Top Push Rod

Adjustable Top Push Rod

Side Push Rod

Top Push Roller

Side Push Horizontal Roller

Approximate Dimensions [mm (in.)]

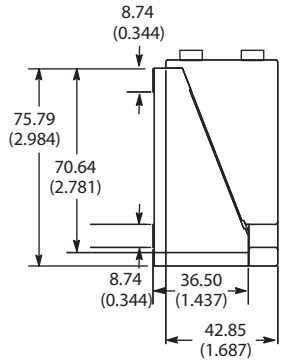

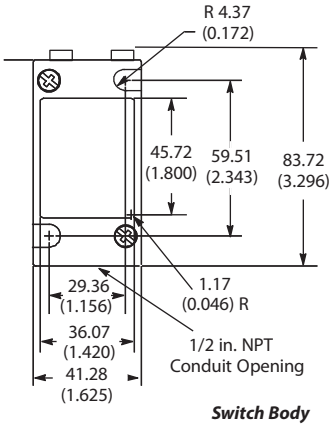

Switch Body

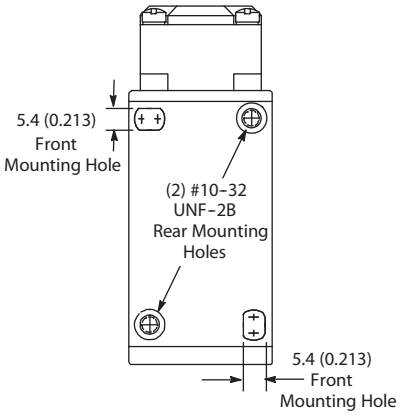

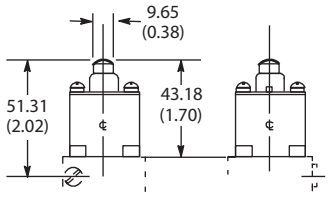

40146-013-59
Top Push Rod Head
Shipping Wt. 0.142 kg (5 oz)

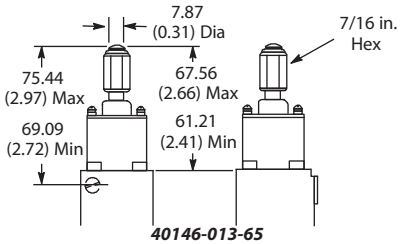

40146-013-65
Adjustable Top Push Rod Head
Shipping Wt. 0.142 kg (5 oz)

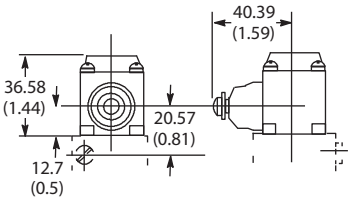

40146-017-63
Side Push Rod Head
Shipping Wt. 0.142 kg (5 oz)

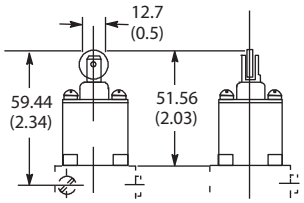

40146-013-60
Top Push Roller Head
Shipping Wt. 0.142 kg (5 oz)

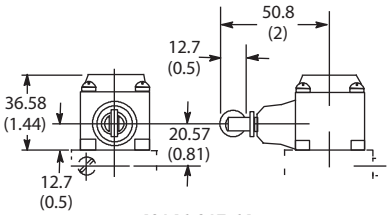

40146-017-64
Side Push Roller Head
Shipping Wt. 0.142 kg (5 oz)

Range of Operation‡

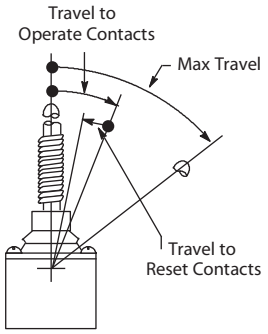

Wobble Stick Nylon Extension

Wobble Stick Wire Extension

Wobble Stick Wire Extension

‡ These switches should be mounted in such a way that the wobble stick or cat whisker will not be deflected beyond the "Maximum Travel" position, as this could cause undesirable repetition of contact action on rebound.

Approximate Dimensions [mm (in.)]

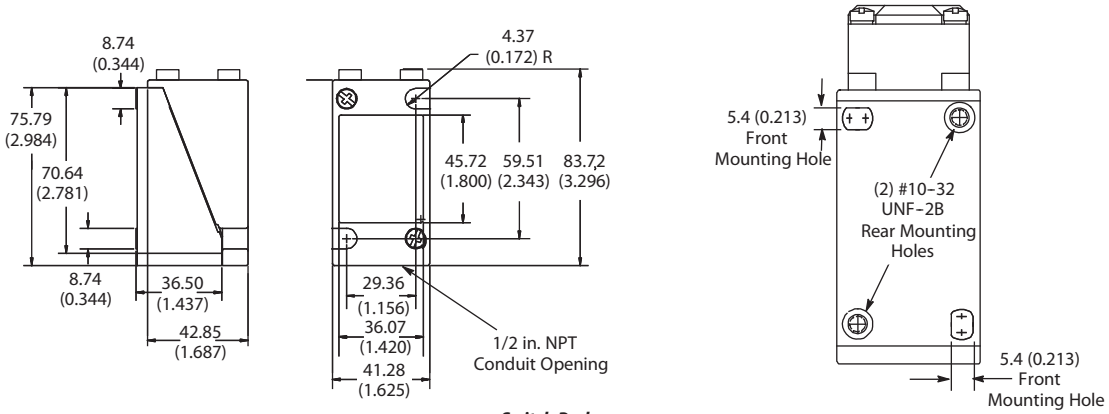

Switch Body

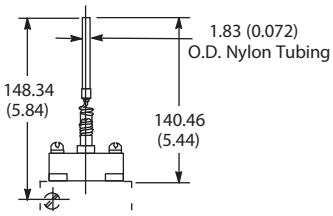

40146-126-53
Cat Whisker Head
Shipping Wt. 0.09 kg (3 oz)

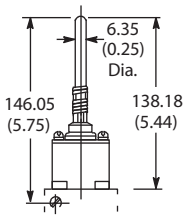

40146-113-53
Nylon Wobble Stick Head
Shipping Wt. 0.2 kg (7 oz)

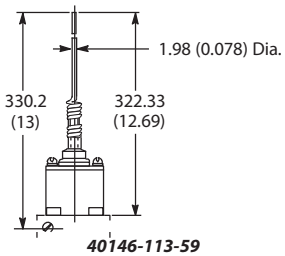

40146-113-59
Wire Wobble Stick Head
Shipping Wt. 0.17 kg (6 oz)

Specifications

Certifications	CE Marked for all applicable directives, UL Listed, and CSA Certified
Environmental	
Enclosure Type Rating	NEMA 4, 13, and 6P♣
Ambient Temperature [C (F)]§	-18…110° (0…230°) -18…54° (0…130°) -40…110° (-40…230°) low temp. model
Input Voltage	5…28V DC
Contact Rating	0.40V A load per pole max. 0.025V A load per pole min.

§ Temperature range below 0°C (+32°F) is based on the absence of freezing moisture or water.
♣ 6P only applies to lever type, except for low torque.

Range of Operation

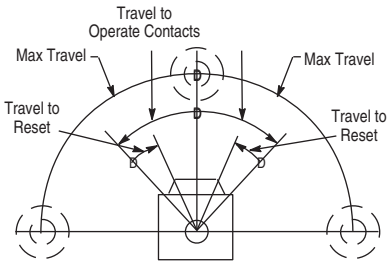

Switch without Lever

Approximate Dimensions [mm (in.)]

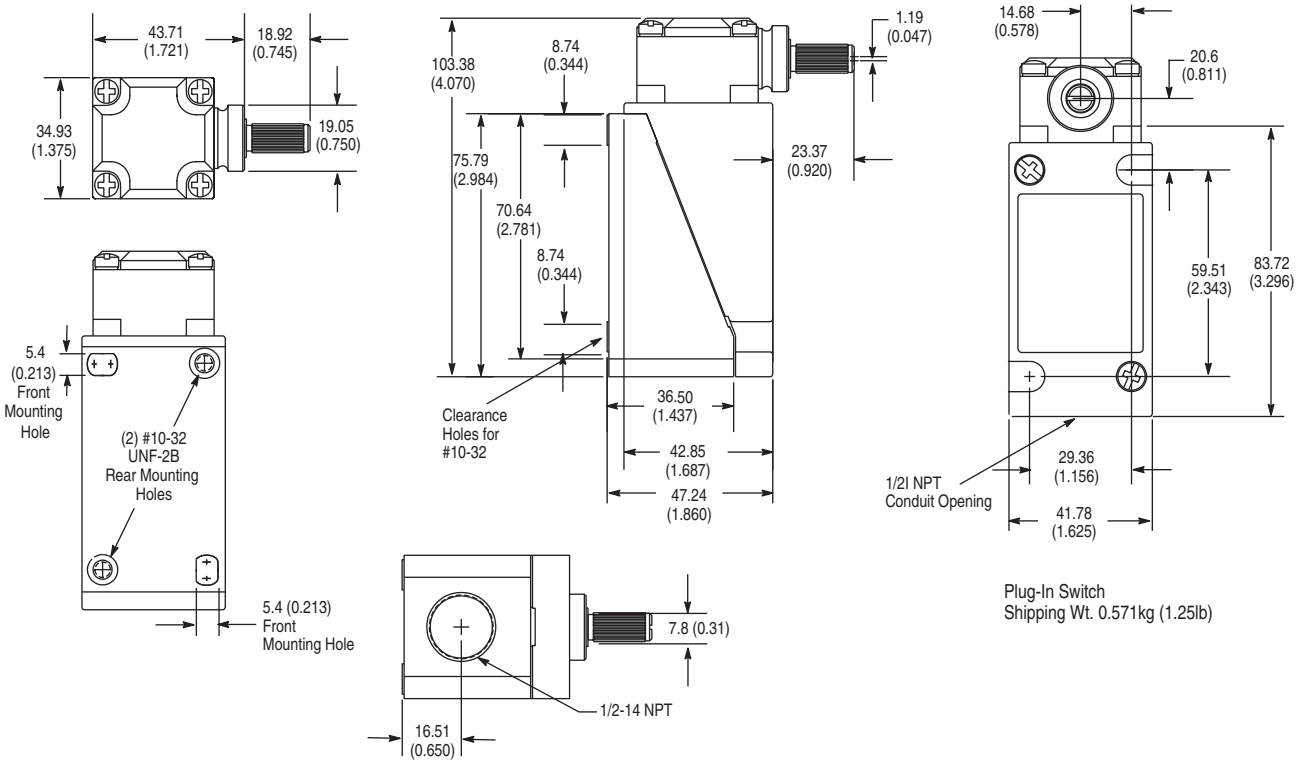

Plug-In Switch
Shipping Wt. 0.571kg (1.25lb)

Range of Operation

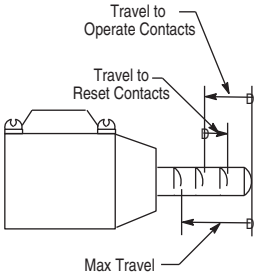

Side Push Rod

Top Push Roller

Side Push Horizontal Roller

Approximate Dimensions [mm (in.)]

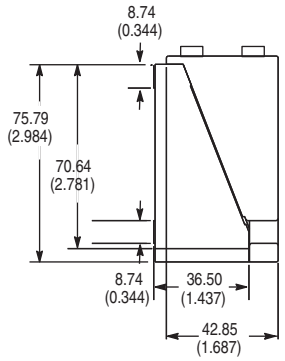

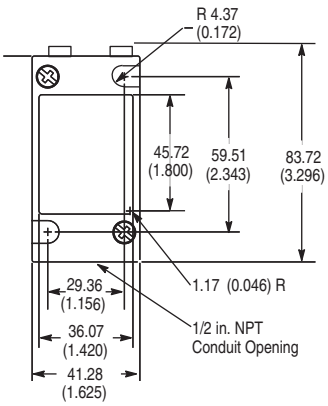

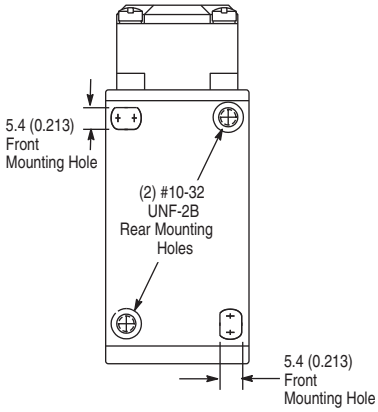

Switch Body

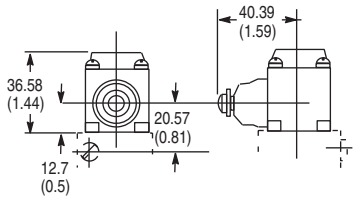

40146-017-63
Side Push Rod Head
Shipping Wt. 0.142kg (5oz)

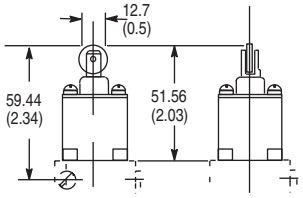

40146-013-60
Top Push Roller Head
Shipping Wt. 0.142kg (5oz)

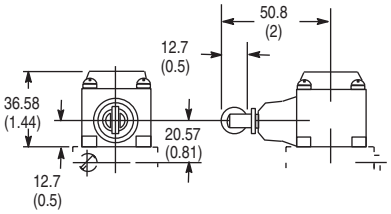

40146-017-64
Side Push Roller Head
Shipping Wt. 0.142kg (5oz)

Manifold Mount

Indicating Light

Manifold Mount

All two-circuit plug-in limit switches can be supplied with a special terminal base which permits mounting the switch manifold style on a machine base, panel, or raceway. As shown above, this base is supplied with a wiring hole and gasket on the back.

To order a manifold mount switch, add the letter **U** to the listed cat. no. Example: Cat. No. 802T-AP becomes Cat. No. 802T-AP**U**.

Indicating Light

Bulletin 802T two-circuit plug-in limit switches (except for the cat whisker, wobble stick, and manifold mount devices) can be supplied with an indicating light. To order add the letter **N** for 120V AC, 50/60 Hz or **N5** for 240V AC 50/60 Hz. Example: Cat. No. 802T-AP becomes Cat. No. 802T-AP**N**.

The indicating light is internally connected to two isolated terminals in the base assembly allowing the user to wire the light to either the N.O. or the N.C. contact. Switches with an indicating light have a contact rating of NEMA A300.

Where an indicator light and a pre-wired 5-pin mini connector are used, the light is pre-wired to the N.C. contact with J1 wiring and to the N.O. contact with J9 wiring. Indicating lights are not available on 4-circuit 802T switches.

Fluorinated Elastomer Seals

To order limit switches with all fluorinated elastomer seals, add the letter **V** to the end of the listed cat. no. **Not available** on manifold mount, low operating torque, low temperature, or limit switches with an indicating light.

To order lever type limit switches with the fluorinated elastomer shaft seal only, add **V1** to the end of the listed cat. no.

Base Assembly

The limit switch base, including the terminal block, is available as a separate unit per the following table.

	Cat. No.
2-Circuit Base	802T-X7
2-Circuit Base with Indicating Light	802T-X7N
2-Circuit Manifold Mount Base	802T-X7U
4-Circuit Base	802T-X8

NPT to Metric Thread Adaptor

Brass 1/2-inch NPT thread to M20 thread adapter. Used with metric cable glands where conduit entry switch has American NPT tapered threads. Compatible with all 1/2-inch NPT conduit entry limit switches, this adapter is valuable accessory for any bulletin requiring conduit entry conversion to be compatible with metric thread.

Description	Cat. No.
Conduit Adapter 1/2-inch NPT to M20 metric thread	802T-X5

Low Temperature Operation

Plug-in limit switches are designed to operate in an ambient temperature range of -18…+110 °C (0…+230 °F), -18…+54 °C (0…+130 °F) for wobble stick and cat whisker. Special limit switches modified for low temperature operation at -40…+110 °C (-40…+230 °F) are available.

Temperature ranges below 0 °C (+32 °F) are based on absence of freezing moisture or water. To order, add the letter **E** to cat. no. Not available on wobble stick, cat whisker or pre-wired cable switches; standard on low torque and maintained devices.

Pre-Wired Cable

To order factory installed pre-wired type "**STOOW"** cable for 2-circuit (5-conductor) and 4-circuit (9-conductor) switches, add the suffix **Y** plus the number of feet required. Example: Cat. No. 802T-AP becomes Cat. No. 802T-AP**Y5** (for a limit switch with 1.5 m (5 ft) of cable).

The standard cable length is 1.5 m (5 ft). Extended cable lengths are available only in multiples of 1.22 m (4 ft) up to 29.26 m (96 ft) for special orders.

Mini-Type Receptacles

To order a Bulletin 802T pre-wired limit switch with a five-pin (2 circuit) or nine pin (4 circuit) mini connector, add the suffix **J1** or **J9** depending on desired wiring (J9 wiring not available for 4-circuit models).

5-Pin Mini-Type Receptacle

"J1" Wiring

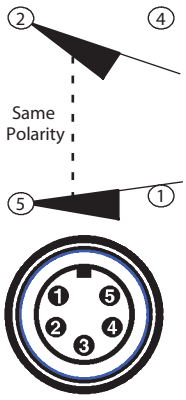

"J9" Wiring

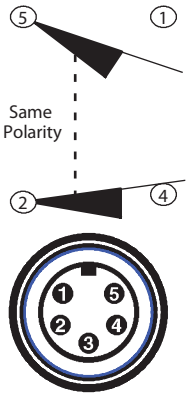

An appropriate female connector with cable (Cat. No. 889N-F5AFC-6F) is available on [T-12061297].

9-Pin Mini-Type Receptacle

"J1" Wiring ("J9" wiring not available for 4 circuit)

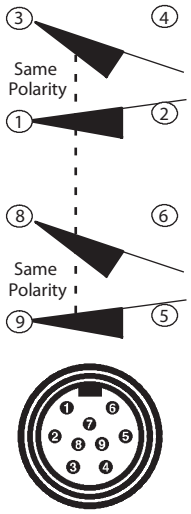

An appropriate female connector with cable (Cat. No. 889N-F9AF-2) is available on [T-12064388].

Specifications

Certifications	UL Listed, CSA Certified, and CE Marked for all applicable directives★
Environmental	
Enclosure Type Rating	NEMA 13, IP54
Ambient Temperature [C (F)]‡	Nonplug-in limit switches are designed to operate in an ambient temperature range of -18…+54 ° (0…+130 °)
Pollution Degree	3

NEMA Rating Designation	Max. Voltage	A		Continuous Carrying Current	VA	
		Make	Break		Make	Break
A600 AC-15	120	60	6.00	10	7200	720
	240	30	3.00			
	480	15	1.50			
	600	12	1.20			

DC Contact Rating (Max. per Pole, Same Polarity)

Voltage Rating	Current Rating
115…125	0.4 A
230…250	0.2 A
550…600	0.1 A

★ Temperature range below 0 °C (32 °F) is based on the absence of freezing moisture or water. See page xxxx for Extended Temperature Option.

802T-R1TD with 802T-W1 Lever

Approximate Dimensions [mm (in.)]

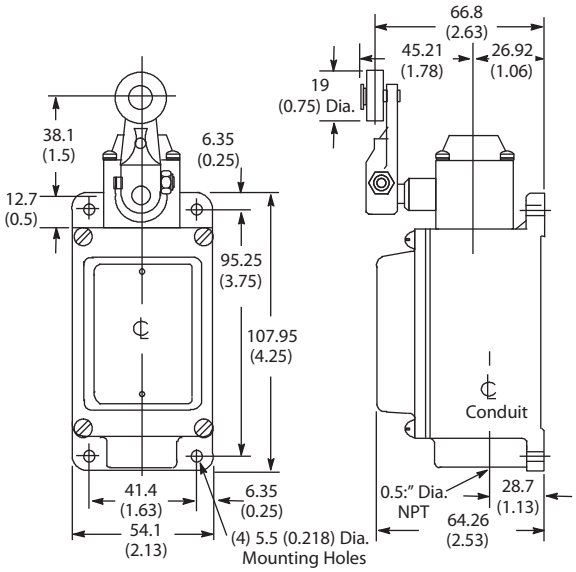

Time Delay Switch with Cat. No. 802T-W1 Lever
Shipping Wt. 0.90 kg (2 lb)

Range of Operation

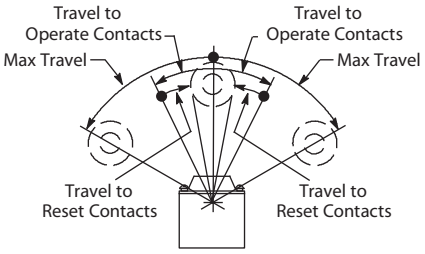

Lever Operation with Standard Levers

802T-A

802T-ALW5

Approximate Dimensions [mm (in.)]

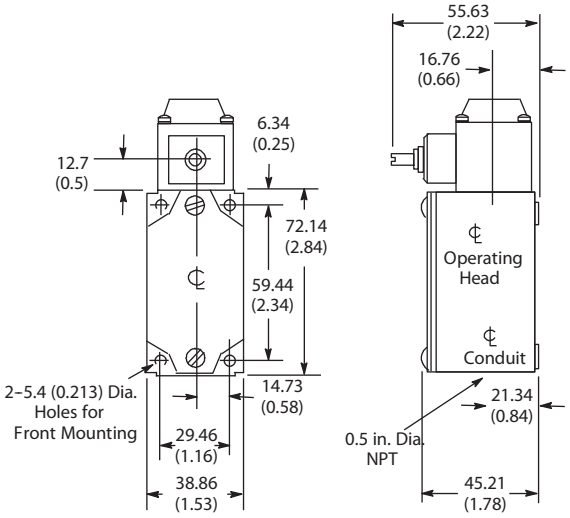

NonPlug-In Switch
Shipping Wt. 0.45 kg (1 lb)

Range of Operation

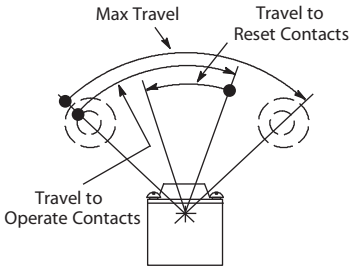

Maintained Contact Models

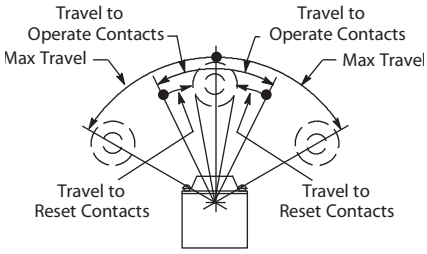

Natural Position Models

802T-AM

802T-NP

Approximate Dimensions [mm (in.)]

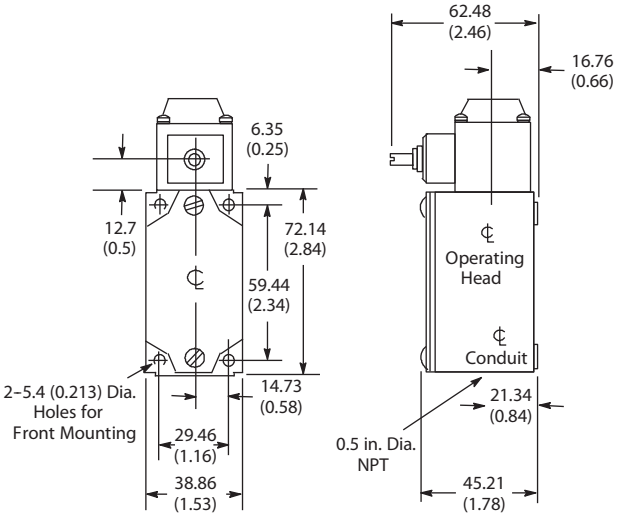

Cat. No. 802T-AM
Shipping Wt. 0.45 kg (1 lb)

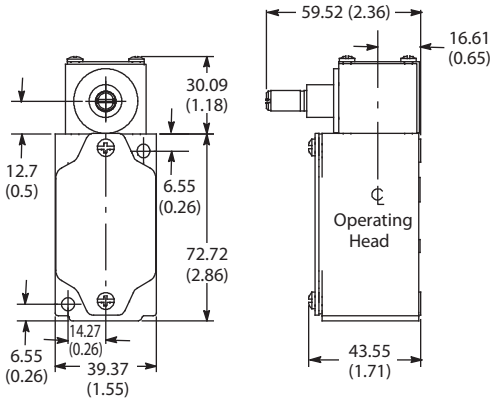

Cat. No. 802T-NP
Shipping Wt. 0.45 kg (1 lb)

802T 2-Circuit Push Type • Spring Return & Maintained Contact

NonPlug-in Style Oiltight Switches

Range of Operation

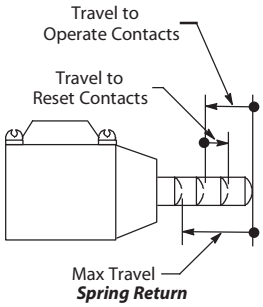

Spring Return

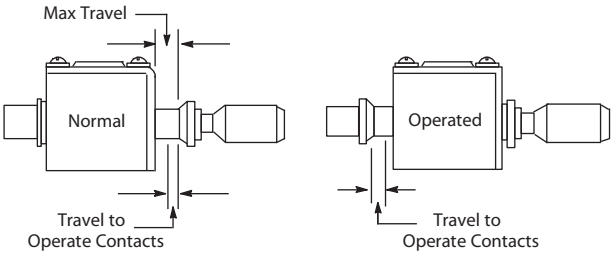

Maintained

Top Push Rod

Adjustable Top Push Rod

Side Push Rod

Top Push Roller

Side Push Roller

Side Push Rod Maintained

Approximate Dimensions [mm (in.)]

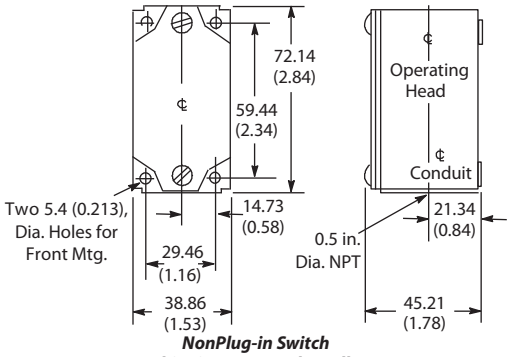

NonPlug-in Switch
Shipping Wt. 0.45 kg (1 lb)

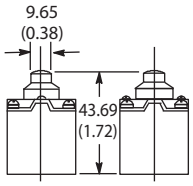

802T-B Top Push Rod Head
Shipping Wt. 0.128 kg (4.5 oz)

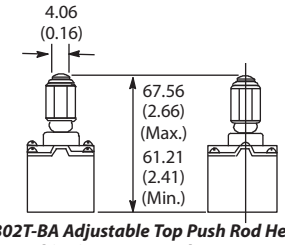

802T-BA Adjustable Top Push Rod Head
Shipping Wt. 0.128 kg (4.5 oz)

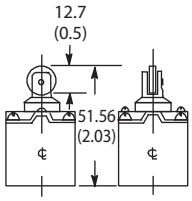

802T-D Top Push Roller Head
Shipping Wt. 0.128 kg (4.5 oz)

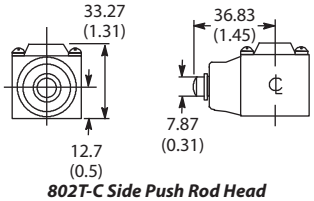

802T-C Side Push Push Rod Head
Shipping Wt. 0.128 kg (4.5 oz)

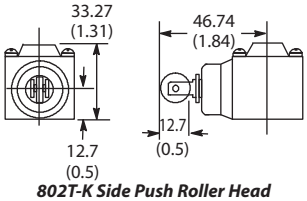

802T-K Side Push Roller Head
Shipping Wt. 0.128 kg (4.5 oz)

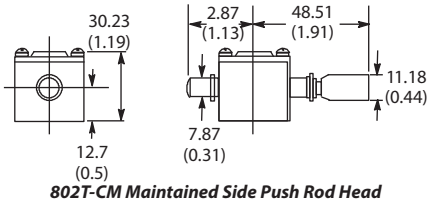

802T-CM Maintained Side Push Rod Head
Shipping Wt. 4.5 oz (0.128 kg)

Range of Operation

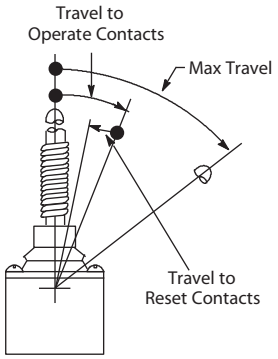

Wobble Stick Nylon Extension

Wobble Stick Wire Extension

Cat Whisker

Approximate Dimensions [mm (in.)]

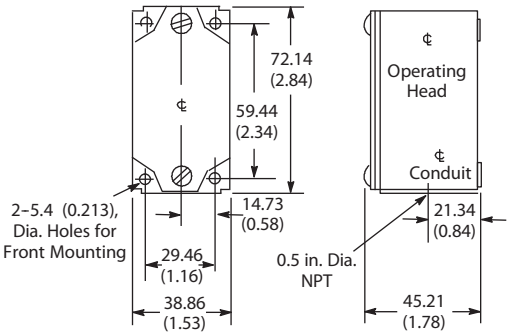

NonPlug-in Switch
Shipping Wt. 0.45 kg (1 lb)

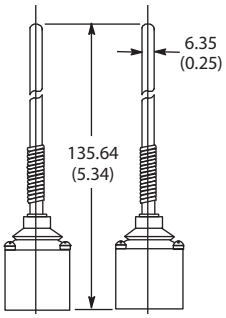

Z-18210 Nylon Wobble Stick Head
Shipping Wt. 0.128 kg (4.5 oz)

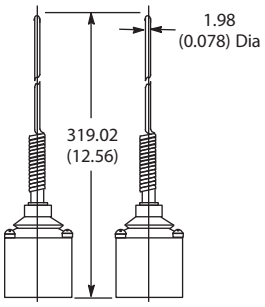

Z-18211 Wire Wobble Stick Head
Shipping Wt. 0.149 kg (5.25 oz)

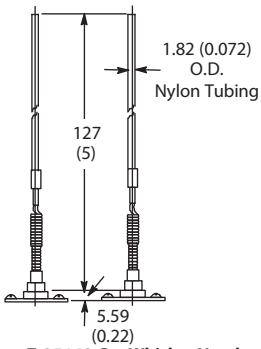

Z-25142 Cat Whisker Head
Shipping Wt. 0.028 kg (1 oz)

Range of Operation

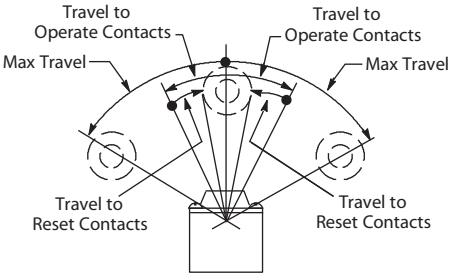

Switch without Lever

Approximate Dimensions [mm (in.)]

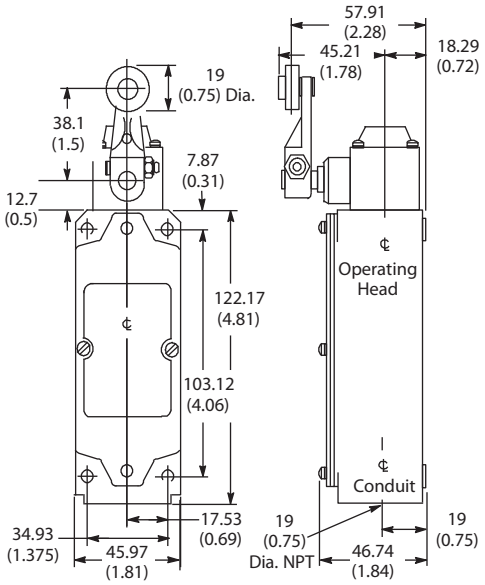

4-Circuit NonPlug-in Switch with 802T-W1 Lever
Shipping Wt. 0.57 kg (1.25 lb)

Range of Operation

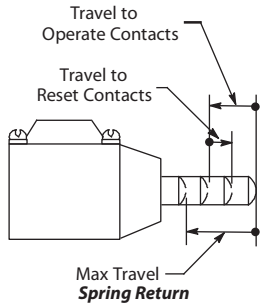

Spring Return

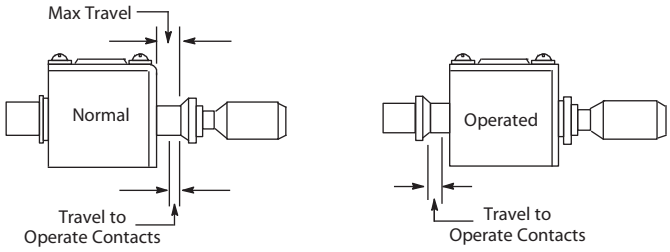

Maintained

Top Rod

Adjustable Top Push Rod

Side Rod

Top Roller

Side Roller

Side Rod

Approximate Dimensions [mm (in.)]

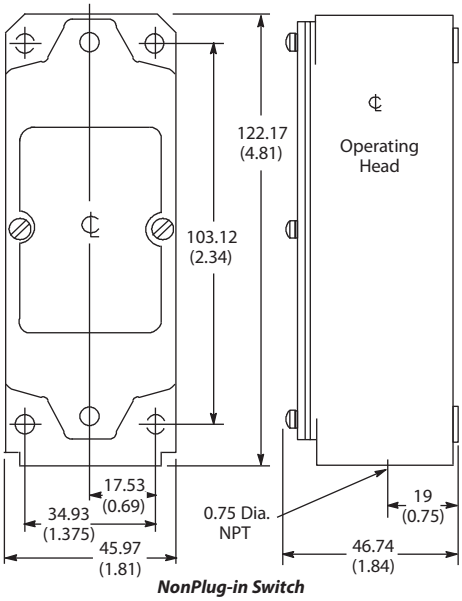

NonPlug-in Switch
Shipping Wt. 0.57 kg (1.25 lb)

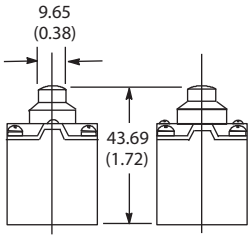

Cat. No. 802T-BT
Top Push Rod Head
Shipping Wt. 0.128 kg (4.5 oz)

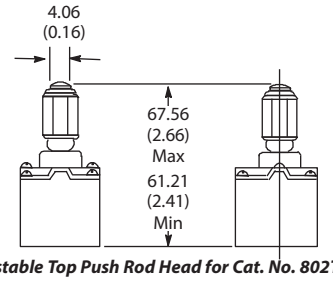

Adjustable Top Push Rod Head for Cat. No. 802T-BAT
Shipping Wt. 0.128 kg (4.5 oz)‡

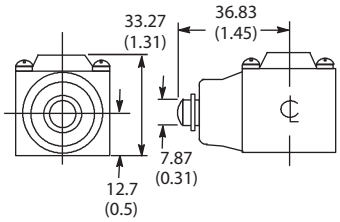

Cat. No. 802T-CT
Side Push Rod Head
Shipping Wt. 0.128 kg (4.5 oz)

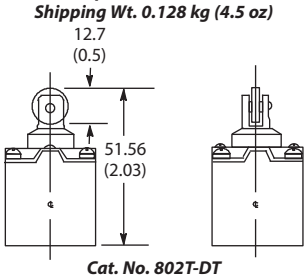

Cat. No. 802T-DT
Top Push Roller Head
Shipping Wt. 0.128 kg (4.5 oz)

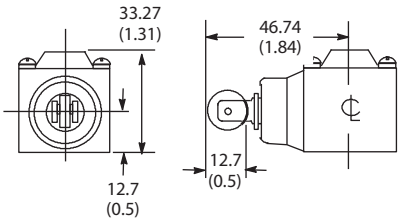

Cat. Nos. 802T-KT & 802T-K1T
Side Push Roller Head
Shipping Wt. 0.128 kg (4.5 oz)

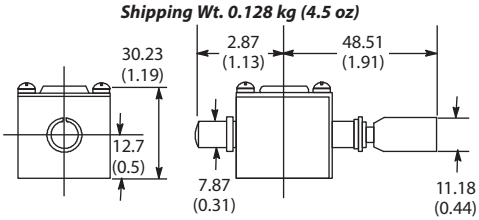

Cat. No. 802T-CMT
Maintained Side Push Rod Head
Shipping Wt. 0.128 kg (4.5 oz)

‡ Not sold separately.

Range of Operation

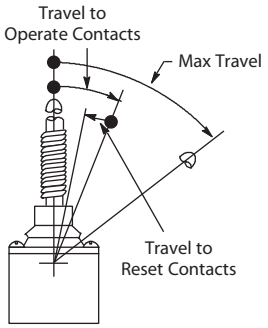

Travels Are Measured at Rigid Section of Stick or Whisker

Wobble Stick

Cat Whisker

Approximate Dimensions [mm (in.)]

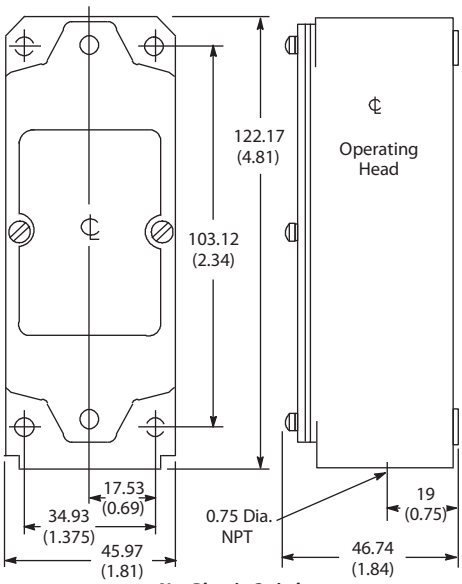

NonPlug-in Switch
Shipping Wt. 0.45 kg (1 lb)

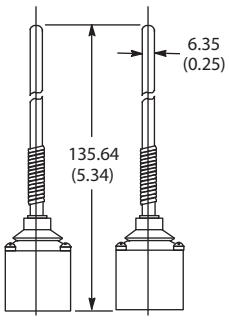

Z-18210 Nylon Wobble Stick Head
Shipping Wt. 0.128 kg (4.5 oz)

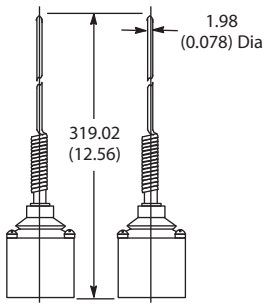

Z-18211 Wire Wobble Stick Head
Shipping Wt. 0.149 kg (5.25 oz)

802T Horizontal 4-Circuit Lever Type • Spring Return

NonPlug-in Style Oiltight Switches

Range of Operation

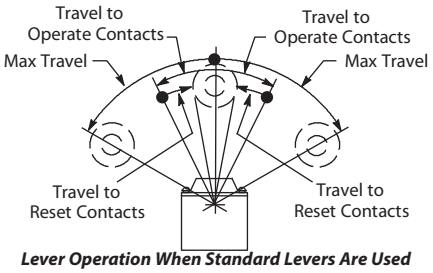

Lever Operation When Standard Levers Are Used

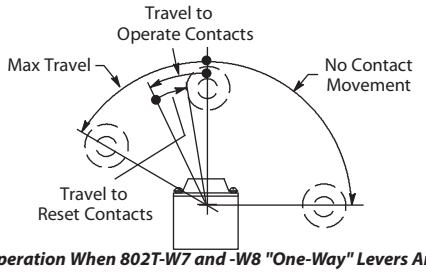

Lever Operation When 802T-W7 and -W8 "One-Way" Levers Are Used

Switch without Lever

Approximate Dimensions [mm (in.)]

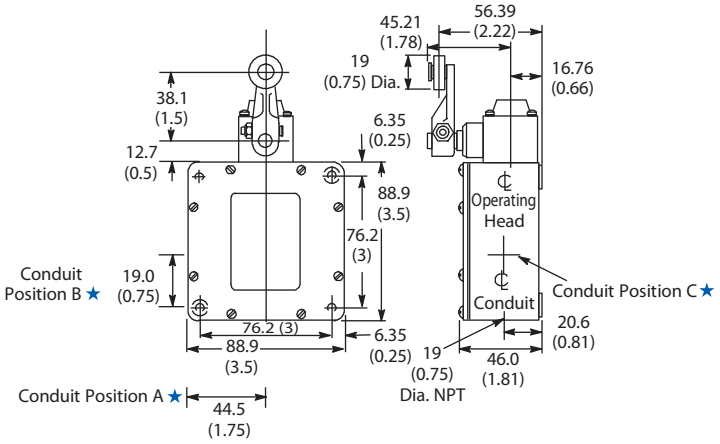

2-Pole Horizontal Switch with 802T-W1 Lever
Shipping Wt. 0.91 kg (2 lb)

★ Conduit positions for modifications: S1, S2, S3

Range of Operation

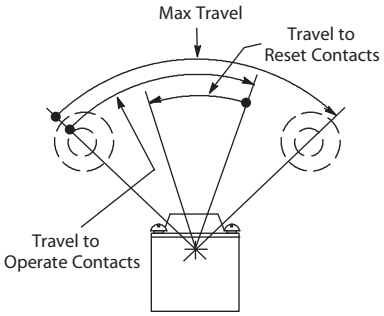

Switch without Lever

Approximate Dimensions [mm (in.)]

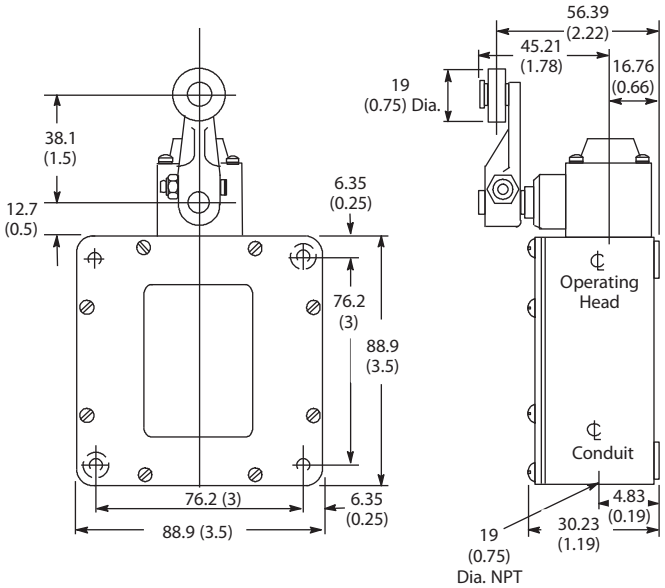

2-Pole Horizontal Switch with 802T-W1 Lever
Shipping Wt. 0.91 kg (2 lb)

802T Horizontal 4-Circuit Push Type • Spring Return & Maintained Contact

NonPlug-in Style Oiltight Switches

Range of Operation

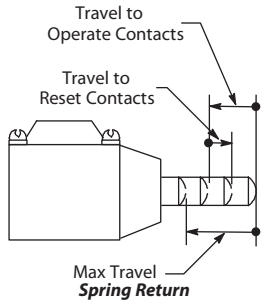

Spring Return

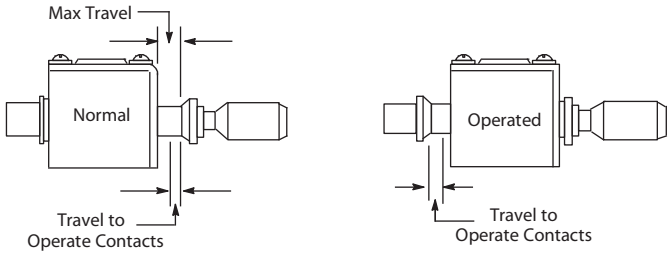

Maintained

Top Push Rod

Adjustable Top Push Rod

Side Push Rod

Top Push Roller

Side Push Roller

Side Push Rod Maintained Contact

Approximate Dimensions [mm (in.)]

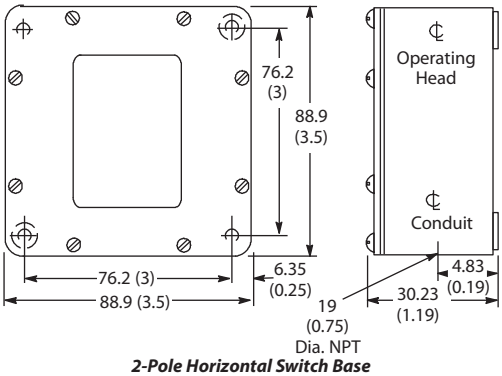

2-Pole Horizontal Switch Base
Shipping Wt. 0.91 kg (2 lb)

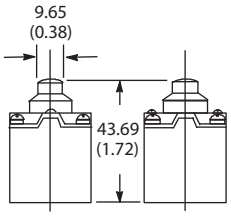

Z-19243
Top Push Rod Head
Shipping Wt. 0.128 kg (4.5 oz)

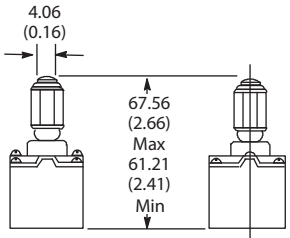

Adjustable Top Push Rod Head for 802T-KTH
Shipping Wt. 0.128 kg (4.5 oz)‡

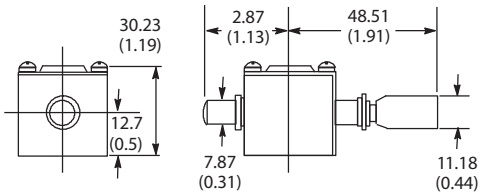

Z-21165
Side Push Rod Head
Shipping Wt. 0.128 kg (4.5 oz)

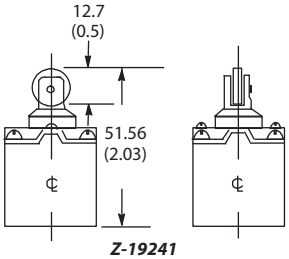

Z-19241
Top Push Roller Head
Shipping Wt. 0.128 kg (4.5 oz)

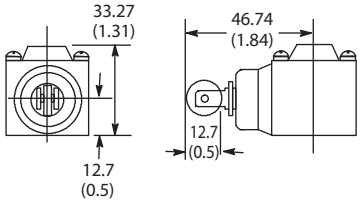

Z-21166
Side Push Roller Head
Shipping Wt. 0.128 kg (4.5 oz)

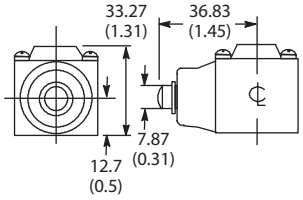

Z-21168
Maintained Side Push Rod Head
Shipping Wt. 0.128 kg (4.5 oz)

‡ Not sold separately.

Range of Operation

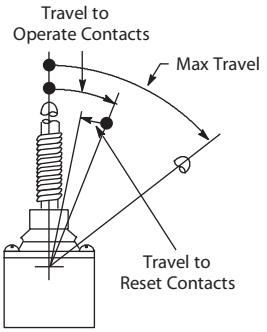

Travels Are Measured at Rigid Section of Stick

Wobble Stick

Cat Whisker

Approximate Dimensions [mm (in.)]

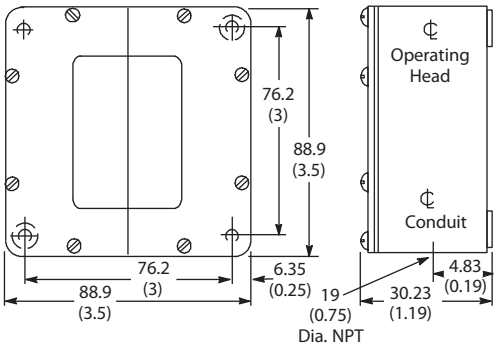

2-Pole Horizontal Switch
Shipping Wt. 0.91 kg (2 lb)

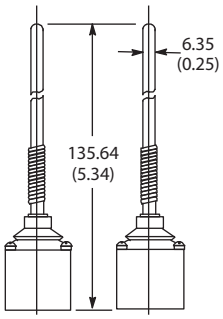

Z-29195 Nylon Wobble Stick Head
Shipping Wt. 0.128 kg (4.5 oz)

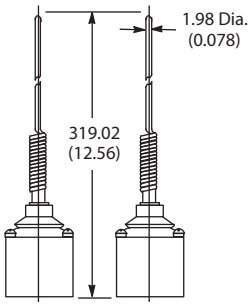

Z-32109 Wire Wobble Stick Head
Shipping Wt. 0.149 kg (5.25 oz)

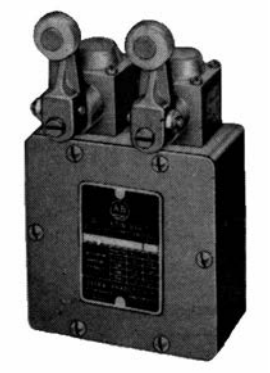

Dual Switch with 802T-W1 Levers

Approximate Dimensions [mm (in.)]

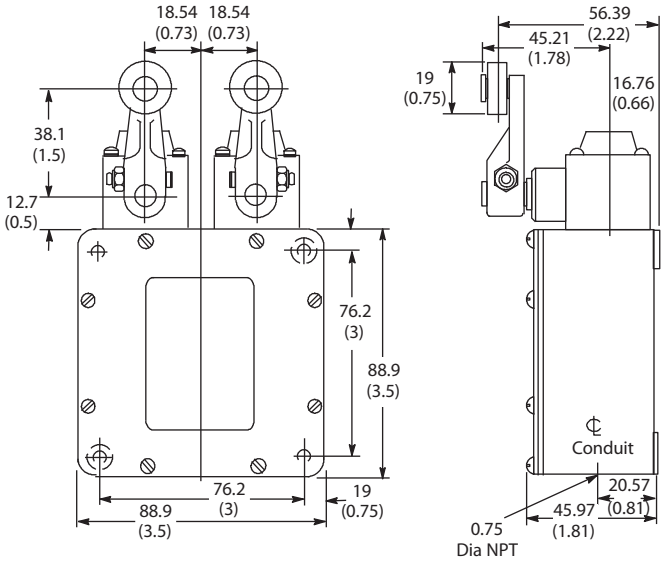

Dual Switch with 802T-W1 Levers
Shipping Wt. 0.91 kg (2 lbs)

Approximate Dimensions [mm (in.)]

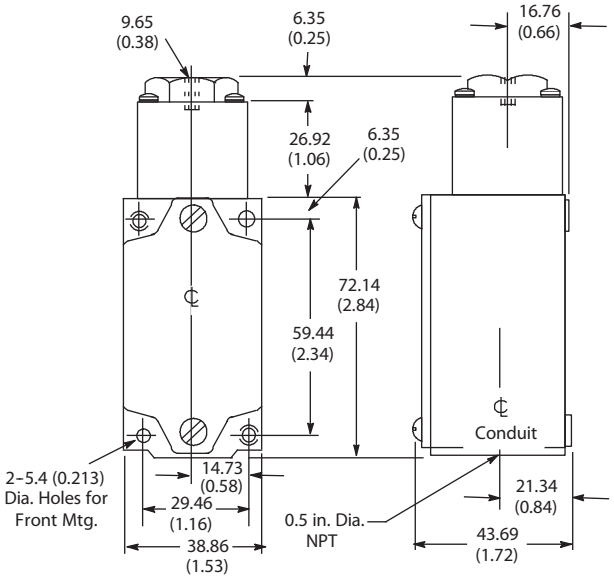

Air-Operated Switch
Shipping Wt. 0.34 kg (12 oz)

Specifications

Safety Ratings					
Standards		EN 954-1, ISO 13849-1, IEC/EN 60204-1, NFPA 79, EN 1088, ISO 14119, IEC/ EN 60947-5-1, ANSI B11.19, AS 4024.1			
Safety Classification		Cat. 1 Device per EN 954-1 Dual channel limit switch suitable for Cat. 3 or 4 systems			
Functional Safety Data ★ **Note**: For up-to-date information, visit *http://www.ab.com/Safety/*					
Certifications		CE Marked for all applicable directives, cULus Listed, and TÜV for 2- and 4-circuit models			
Outputs					
Safety Contacts ‡		1 N.C. snap acting or 2 N.C. snap acting			
Auxiliary Contacts		1 N.O. snap acting or 2 N.O. snap acting			
Thermal Current I_{th}		10 A			
Rated Insulation Voltage		300V AC or 600V AC			
Switching Current @ Voltage, Min.		—			
Utilization Category					
A600/AC-15	(Ue)	600V	500V	240V	120V
	(Ie)	1.2 A	1.4 A	3.0 A	6.0 A
N600/DC-13	(Ue)	600V	500V	250V	125V
	(Ie)	0.4 A	0.55 A	1.1 A	2.2 A
Operating Characteristics					
Actuation Speed, Max.		200 ft/min varies with applied loading and actuation method★			
Actuation Speed, Min.		200 ft/min varies with applied loading and actuation method★			
Actuation Frequency, Max.		8000 operations per hour			
Mechanical Life		20 million cycles			
Environmental					
Enclosure Type Rating		NEMA 4, 6P, 12, 13 and IP65/67			
Operating Temperature [C (F)]		-18…+110° (0…+230°)			
Pollution Degree		3			
Physical Characteristics					
Housing Material		Die-cast alloy			
Actuator Material		Various metals or plastics			
Mounting		2 #10 equal length fasteners			
Vibration		Contact fragility (10…2000 Hz @ 0.06 inch peak-to-peak)			
Shock		Contact fragility (25 Gn 3 pulses per axis)			
Conduit Entry		1/2 inch NPT or M20			
Color		Grey			

★ Usable for ISO 13849-1:2006 and IEC 62061. Data other than B10d is based on:
- Usage rate of 1op/10 mins., 24 hrs/day, 360 days/year, representing 51840 operations per year
- Mission time/Proof test interval of 38 years

‡ The safety contacts are described as normally closed (N.C.) i.e., with the guard closed, actuator in place (where relevant) and the machine able to be started.

AC Contact Rating (Maximum per Pole, 50 or 60Hz, 2 Circuits)

NEMA Rating Designation	Max Voltage	A		Continuous Carrying Current	VA	
		Make	Break		Make	Break
A600 AC-15	120	60	6.00	10	7200	720
	240	30	3.00			
	480	15	1.50			
	600	12	1.20			

AC Contact Rating (Maximum per Pole, 50 or 60Hz, 4 Circuits)

NEMA Rating Designation	Max Voltage	A		Continuous Carrying Current	VA	
		Make	Break		Make	Break
A300 AC-15	120	60	6.00	10	7200	720
	240	30	3.00			

DC Contact Rating (Maximum per Pole)

NEMA Rating Designation	Max Voltage	A		Continuous Carrying Current	VA	
		Make	Break		Make	Break
Q300 DC 13	250	0.27	0.27	2.5	69	69
	125	0.55	0.55			

Low Voltage DC

24V DC @ 1.1 Amps resistive load

Range of Operation

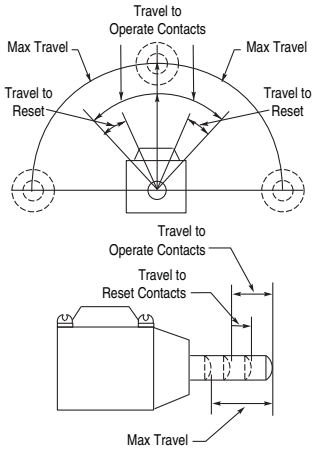

Approximate Dimensions [mm (in.)]

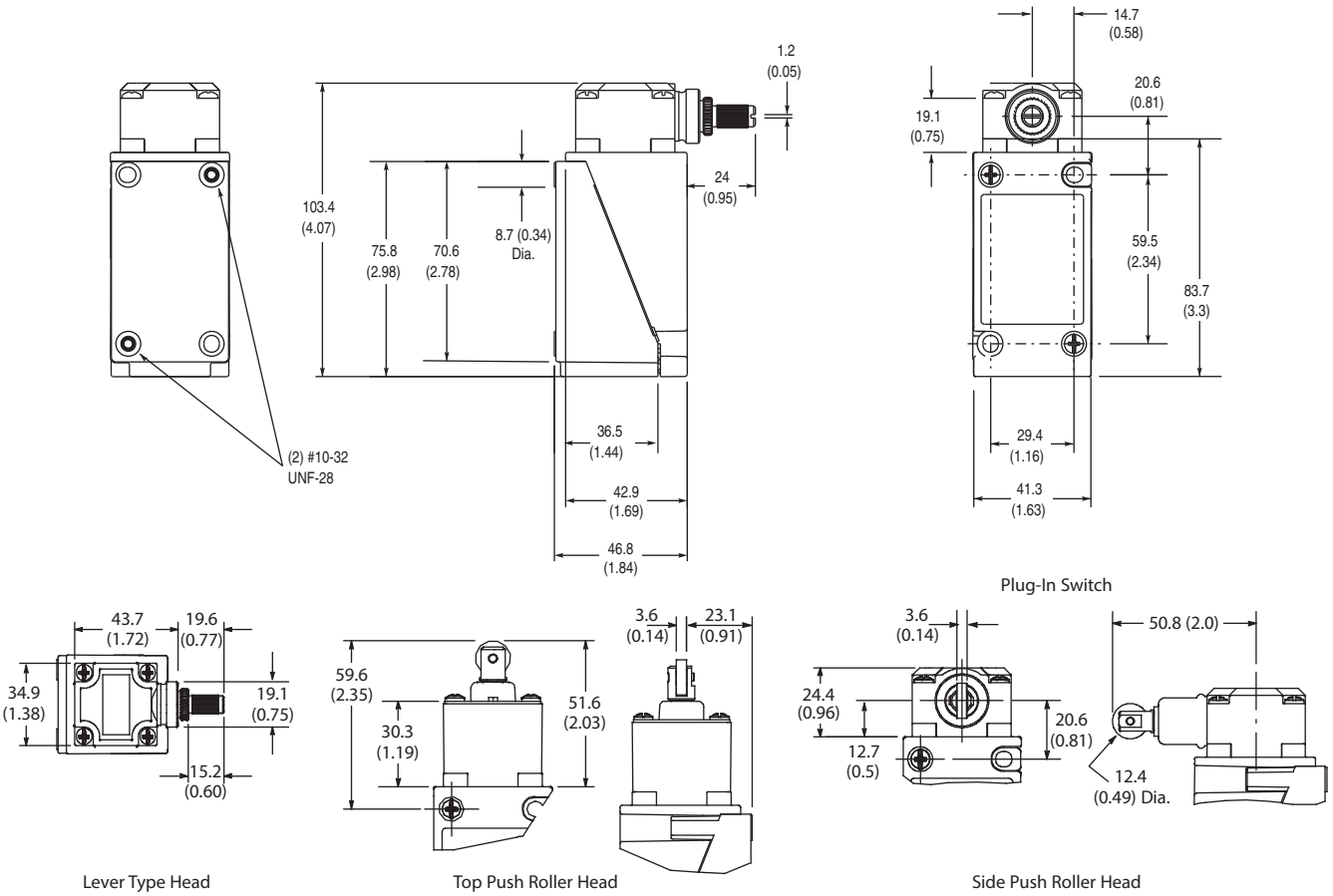

Specifications

Certifications	UL Listed and CSA Certified
Environmental	
Enclosure Type Rating	NEMA 7 and 9/Class I, Groups B, C and D or Class II, Groups E, F and G or Class III; NEMA 4/nonhazardous locations
Ambient Temperature [C (F)] ★	Push type with spring return and all lever types except neutral position: -46…+121 ° (-50…+250 °) Wobble stick and cat whisker devices: -29…+54 ° (-20…+130 °) Side push maintained: -46…+121 ° (-50…+250 °) Neutral position: -18…+121 ° (0…250 °)

AC Contact Rating (Maximum per Pole, 50 or 60 Hz, Same Polarity)

NEMA Rating Designation	Max. Voltage	A		Continuous Carrying Current [A]	VA	
		Make	Break		Make	Break
A600	120	60	6.00	10	7200	720
	240	30	3.00			
	480	15	1.50			
	600	12	1.20			

DC Contact Rating (Maximum per Pole)

NEMA Rating Designation	Max Voltage	A		Continuous Carrying Current [A]	VA	
		Make	Break		Make	Break
P150	125	1.1		5	138	

★ Temperature ranges below 0 °C (32 °F) are based on the absence of freezing moisture or water.

Range of Operation

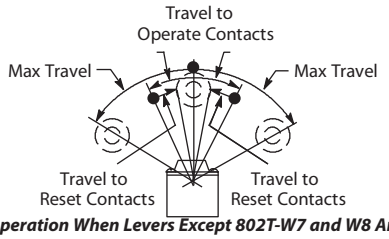

Lever Operation When Levers Except 802T-W7 and W8 Are Used

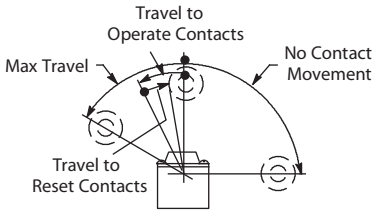

Lever Operation When 802T-W7 and W8 "One-Way" Levers Are Used

Switch Without Lever

Approximate Dimensions [mm (in.)]

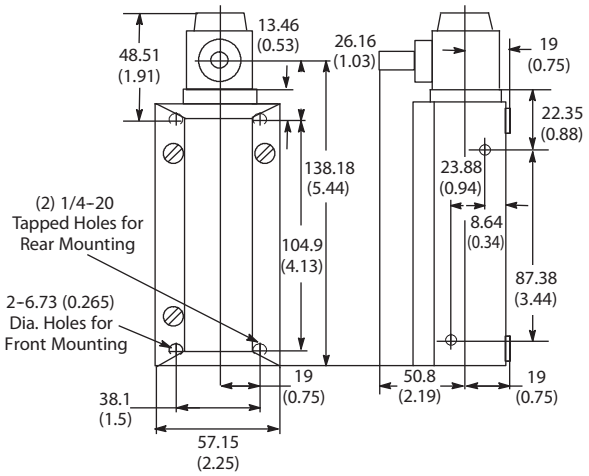

Approximate Shipping Wt.
0.9 kg (2 lb)

Mounting Hole Dimensions

2— 0.265 Dia. through hole with 0.500 Dia. x 0.25 in. deep C'Bore for front mounting.

2—1/4-20 x 0.56 in. deep Tapped holes for rear mounting.

2—1/4-20 x 0.5 in. deep Tapped holes for side mounting.

Note: For operating head and lever assembly dimensions not shown, see [h-11596203]. Conduit pipe opening 1/2 in. NPT.

Range of Operation

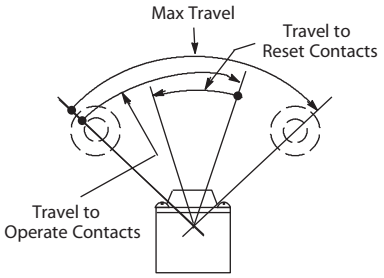

Switch Without Lever

Approximate Dimensions [mm (in.)]

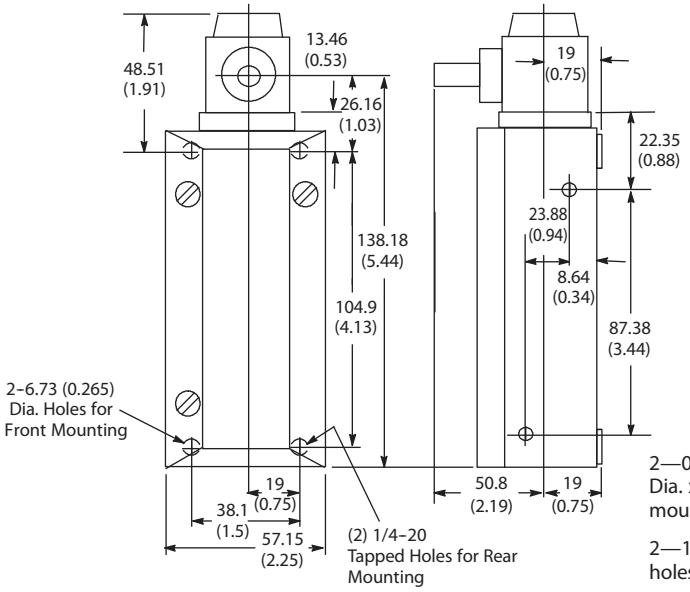

Mounting Hole Dimensions

2—0.265 Dia. through hole with 0.500 Dia. x 0.25 in. deep C'Bore for front mounting.

2—1/4-20 x 0.56 in. deep Tapped holes for rear mounting.

2—1/4-20 x 0.5 in. deep Tapped holes for side mounting.

Approximate Shipping Wt.
0.9 kg (2 lb)

Note: For operating head and lever assembly dimensions not shown, see [h-11596203]. Conduit pipe opening 1/2 in. NPT.

Range of Operation

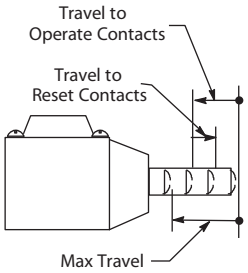

Top Push Rod

Adjustable Top Push Rod

Side Push Rod

Top Push Roller

Side Push Roller

Approximate Dimensions [mm (in.)]

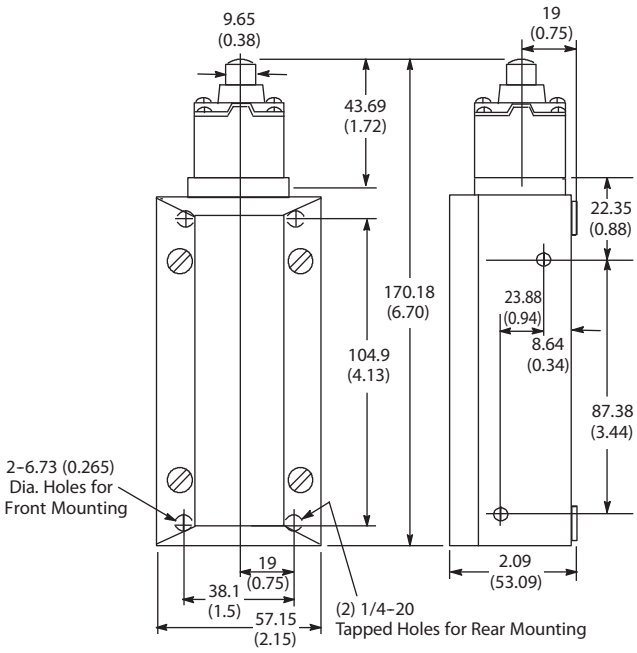

Approximate Shipping Wt.
0.9 kg (2 lb)

Mounting Hole Dimensions

2—0.265 Dia. through hole with 0.500 Dia. x 0.25in deep C'Bore for front mounting.

2—1/4-20 x 0.56in deep Tapped holes for rear mounting.

2—1/4-20 x 0.5in deep Tapped holes for side mounting.

Note: For operating head and lever assembly dimensions not shown, see [h-11596203]. Conduit pipe opening 1/2 in. NPT.

Approximate Dimensions [mm (in.)]

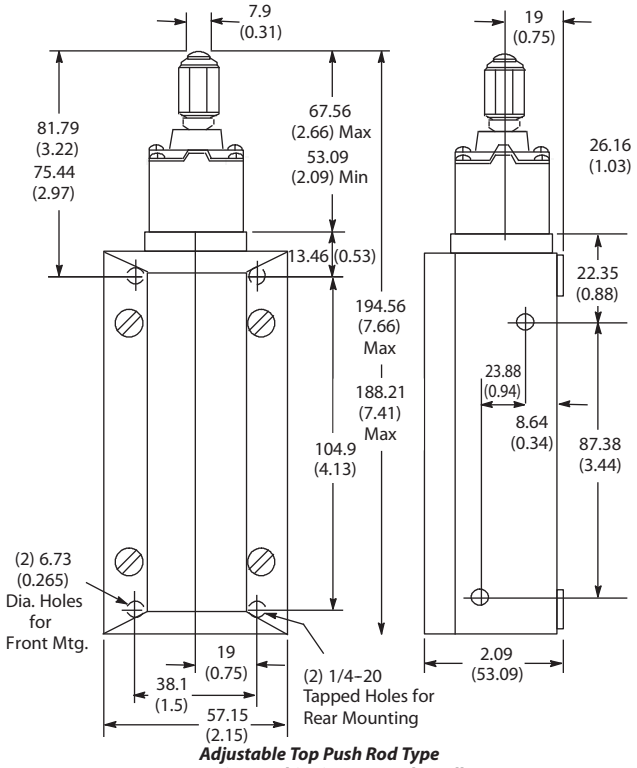

Adjustable Top Push Rod Type
Approximate Shipping Wt. 0.9 kg (2 lb)

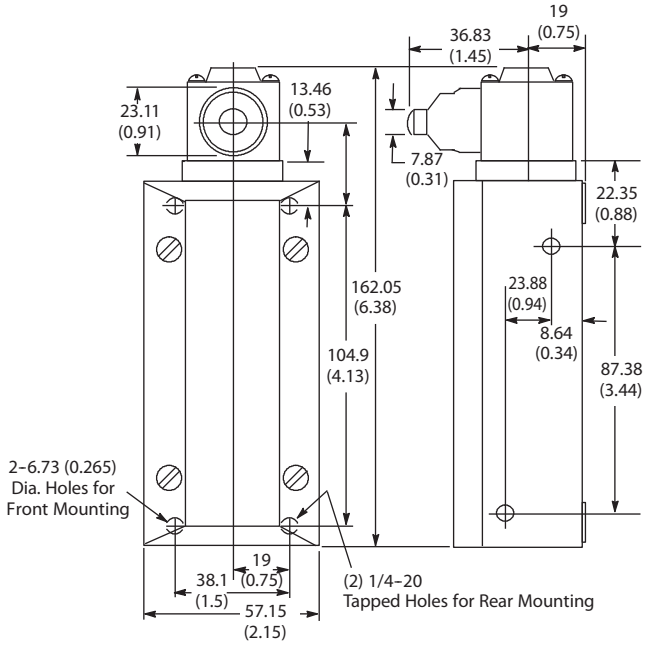

Side Push Rod Type
Approximate Shipping Wt. 0.9 kg (2 lb)

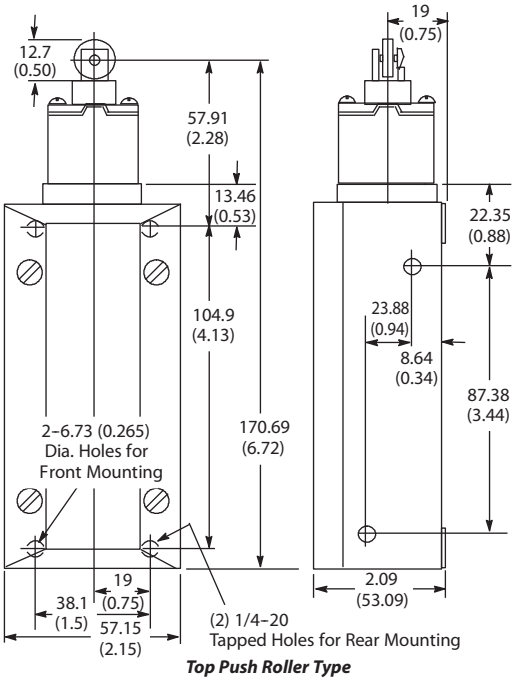

Top Push Roller Type
Approximate Shipping Wt. 0.9 kg (2 lb)

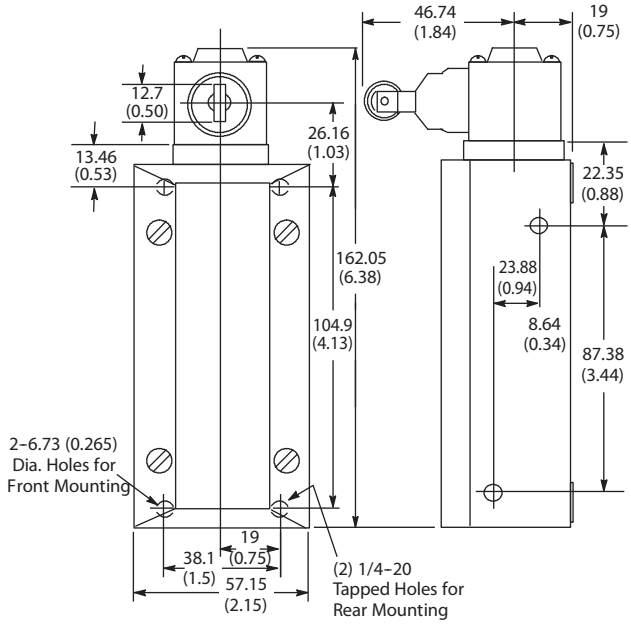

Side Push Roller Type
Approximate Shipping Wt. 0.9 kg (2 lb)

Note: For operating head and rear assembly dimensions not shown, see [h-11596203]. Conduit pipe opening 1/2 in. NPT.

Mounting Hole Dimensions
2—0.265 dia. through hole with 0.500 dia. x 0.25 in. deep C'Bore for front mounting.
2—1/4-20 x 0.56 in. deep tapped holes for rear mounting.
2—1/4-20 x 0.5 in. deep tapped holes for side mounting.

Range of Operation

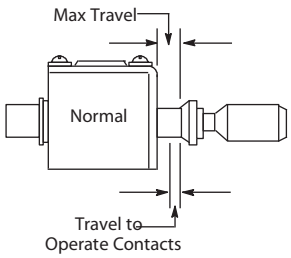

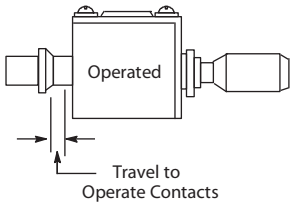

Side Push Rod

Approximate Dimensions [mm (in.)]

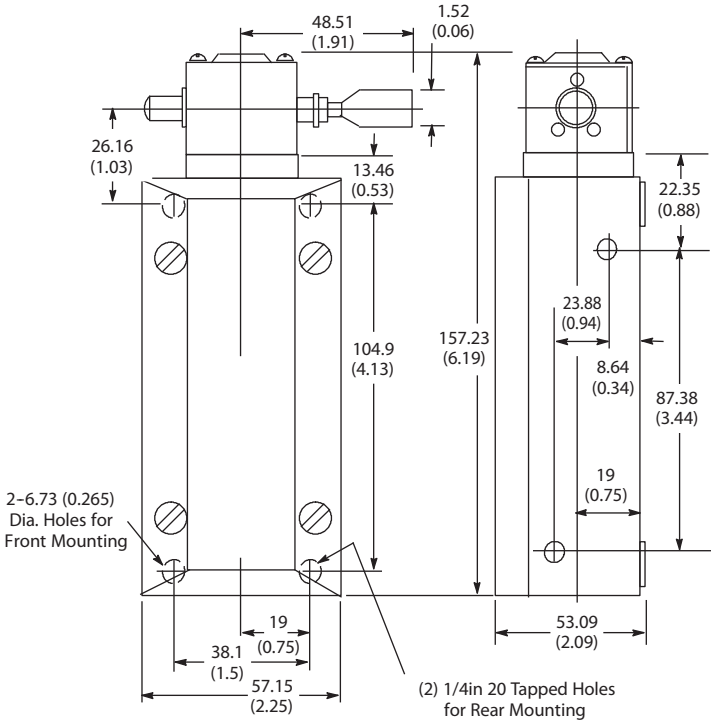

Note: For operating head and lever assembly dimensions not shown, see [h-11596203]. Conduit pipe opening 1/2 in. NPT.

Range of Operation

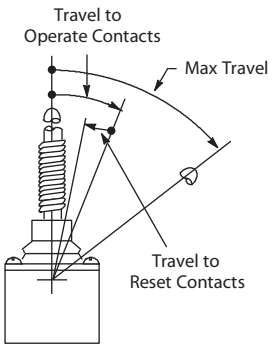

Travels are measured at rigid section of stick or whisker.

Wobble Stick

Cat Whisker

Approximate Dimensions [mm (in.)]

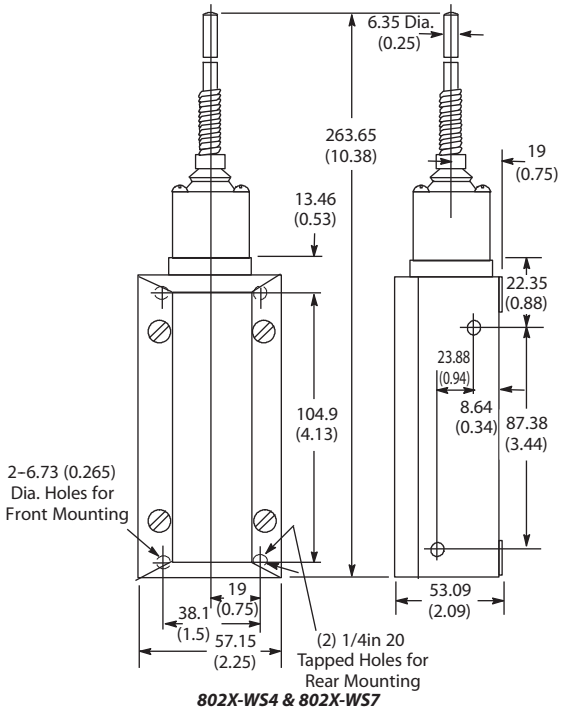

802X-WS4 & 802X-WS7

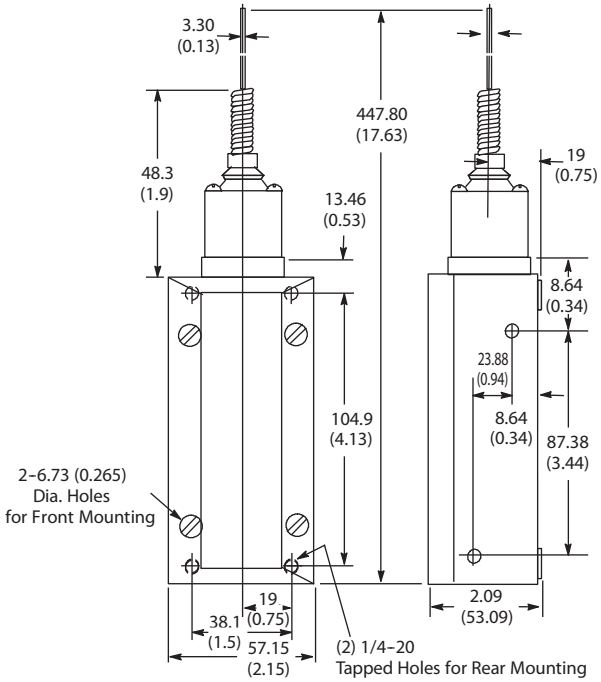

802X-WS14 & 802X-WS17

Note: For operating head and lever assembly dimensions not shown, see [h-11596203]. Conduit pipe opening 1/2 in. NPT.

Specifications

Certifications	UL Listed and CSA Certified
Environmental	
Enclosure Type Rating	NEMA 7 and 9/Class I, Groups B, C, and D or Class II, Groups E, F, and G
Ambient Temperature [C (F)] ★	-29…+121 ° (-20…+250 °) except devices with wobble stick operators. Wobble stick models are rated from -18…+54 ° (0…130 °)

AC Contact Rating (Maximum per Pole, 50 or 60 Hz, Same Polarity)

NEMA Rating Designation	Max. Voltage	A		Continuous Carrying Current [A]	VA	
		Make	Break		Make	Break
B600	120	30	3.00	5	3600	360
	240	15	1.50			
	480	7.5	0.75			
	600	6	0.60			

DC Contact Rating (Maximum per Pole)

NEMA Rating Designation	Volatge Range	Current Rating
P300	115…125 230…250	1.1 A 0.55 A

★ Temperature ranges below 0 °C (32 °F) are based on the absence of freezing moisture or water.

Range of Operation

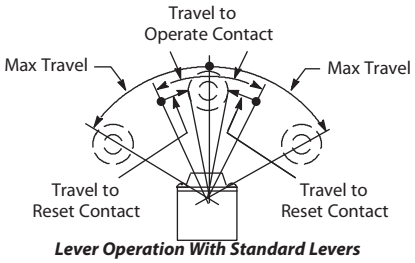

Lever Operation With Standard Levers

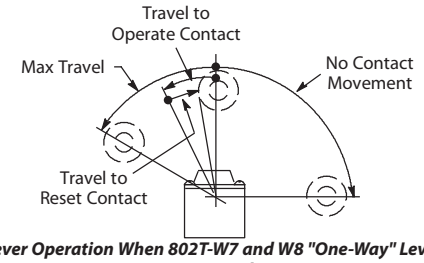

Lever Operation When 802T-W7 and W8 "One-Way" Levers Are Used

Switch Without Lever

Approximate Dimensions [mm (in.)]

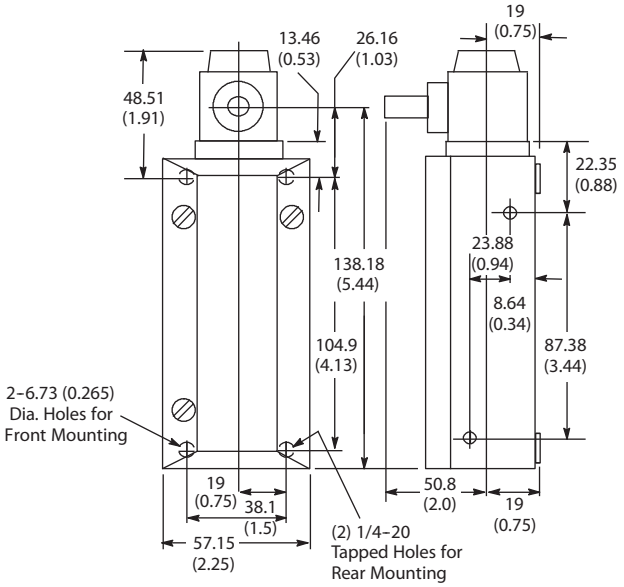

Approximate Shipping Wt.
0.9 kg (2 lb)

Mounting Hole Dimensions

2—0.265 Dia. through hole with 0.500 Dia. C'Bore 0.25 in. deep for front mounting.

2—1/4-20 Tapped holes 0.56 in. deep for rear mounting.

2—1/4-20 Tapped holes 0.5 in. deep for side mounting.

Note: For operating head and lever assembly dimensions not shown, see [h-11596203]. Conduit pipe opening 1/2 in. NPT.

Range of Operation

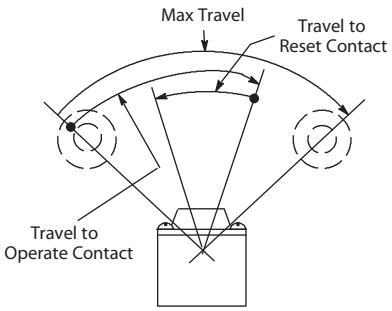

Switch Without Lever

Approximate Dimensions [mm (in.)]

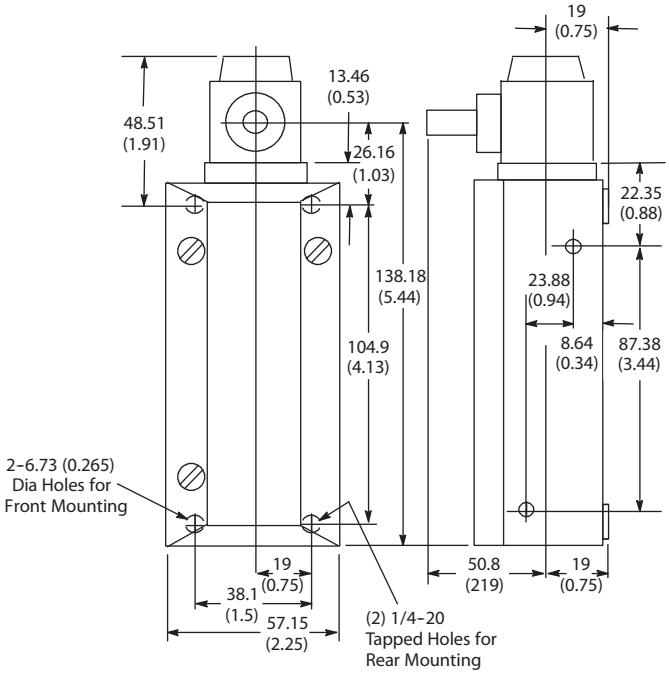

Approximate Shipping Wt.
0.9 kg (2 lb)

Mounting Hole Dimensions

2—0.265 Dia. through hole with 0.500 Dia. C'Bore 0.25 in. deep for front mounting.

2—1/4-20 Tapped holes 0.56 in. deep for rear mounting.

2—1/4-20 Tapped holes 0.5 in. deep for side mounting.

Note: For operating head and lever assembly dimensions not shown, see [h-11596203]. Conduit pipe opening 1/2 in. NPT.

Range of Operation

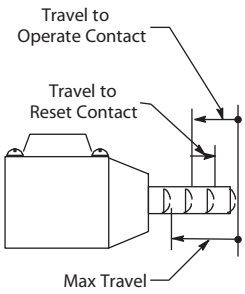

Top Push Rod

Adjustable Top Push Rod

Side Push Rod

Top Push Roller

Side Push Roller

Approximate Dimensions [mm (in.)]

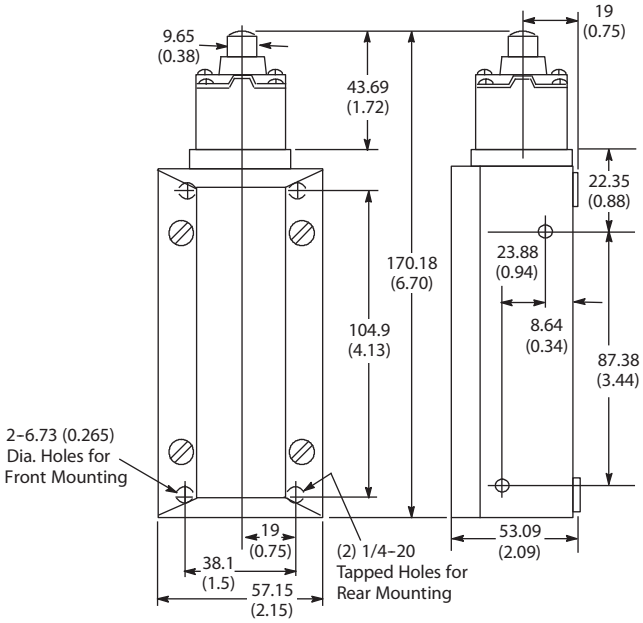

Approximate Shipping Wt. 0.9 kg (2 lb)

Mounting Hole Dimensions

2—0.265 Dia. through hole with 0.500 Dia. C'Bore 0.25 in. deep for front mounting.

2—1/4-20 Tapped holes 0.56 in. deep for rear mounting.

2—1/4-20 Tapped holes 0.5 in. deep for side mounting.

Note: For operating head and lever assembly dimensions not shown, see [h-11596203]. Conduit pipe opening 1/2 in. NPT.

Approximate Dimensions [mm (in.)]

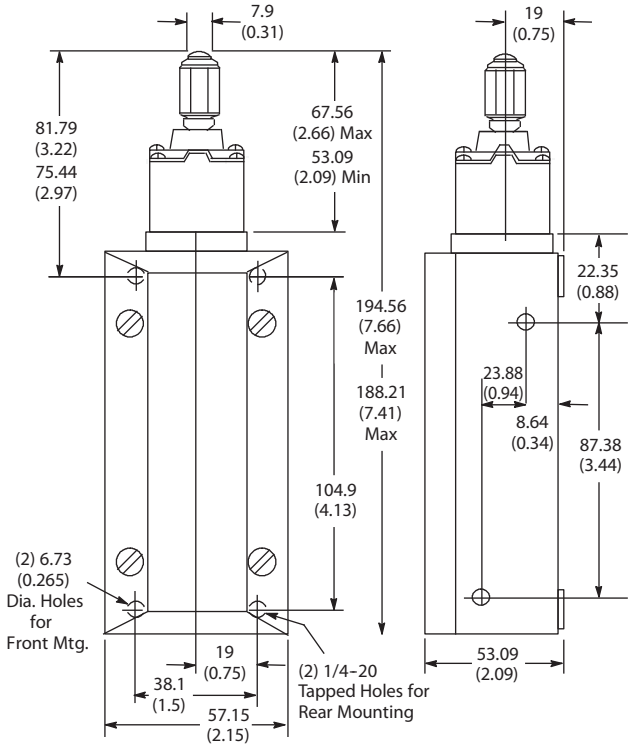

Bulletin 802XR Adjustable Top Push Rod Type
Approximate Shipping Wt. 0.9 kg (2 lb)

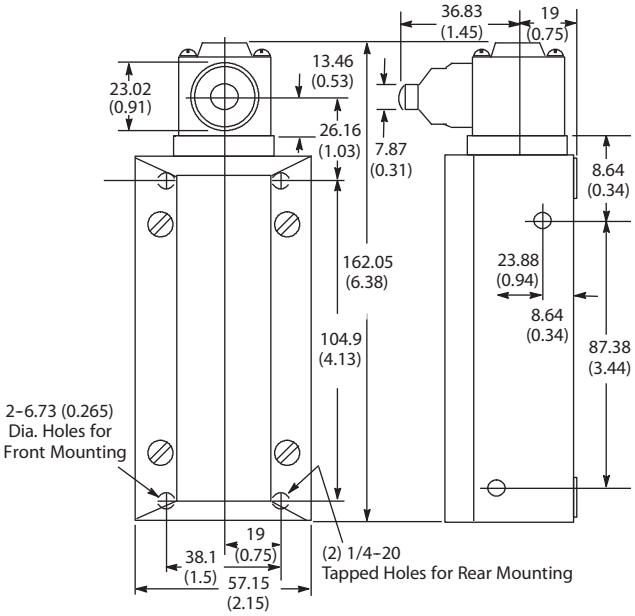

Bulletin 802XR Side Push Rod Type
Approximate Shipping Wt. 0.9 kg (2 lb)

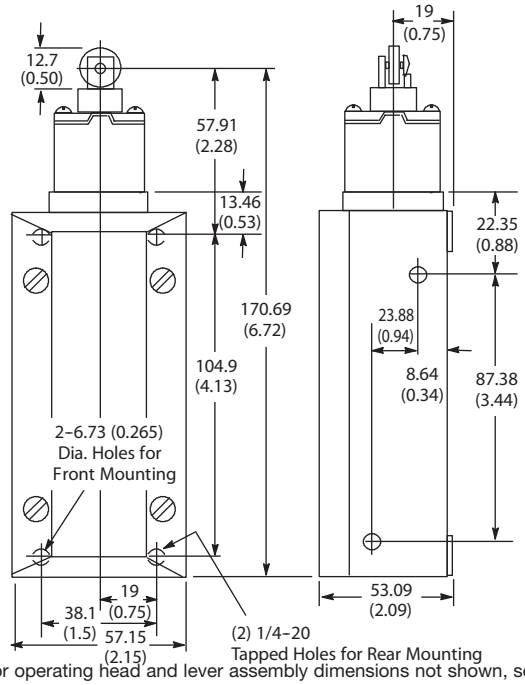

Bulletin 802XR Top Push Roller Type
Approximate Shipping Wt. 0.9 kg (2 lb)

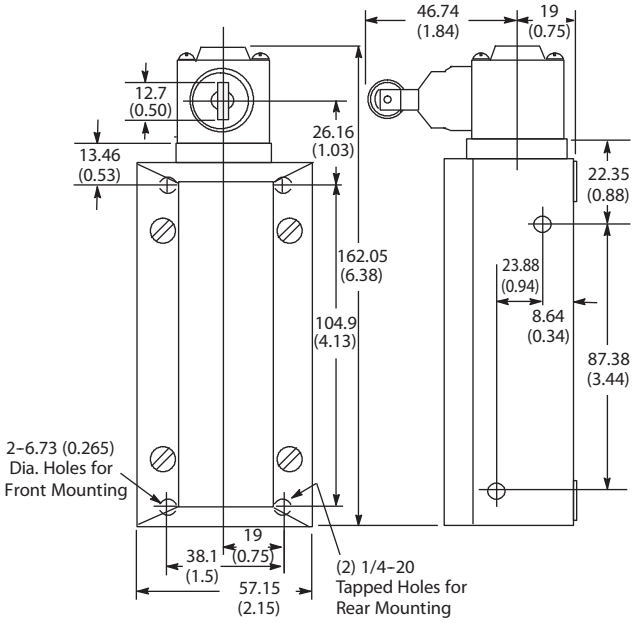

Bulletin 802XR Side Push Roller Type
Approximate Shipping Wt. 0.9 kg (2 lb)

Note: For operating head and lever assembly dimensions not shown, see page xxxxx. Conduit pipe opening 1/2 in. NPT.

Range of Operation

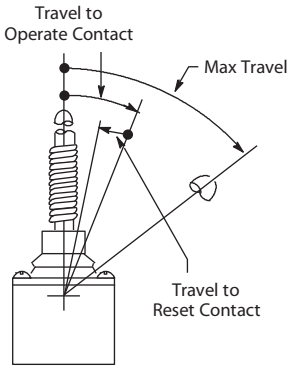

Travels Are Measured at Rigid Section of Operator

Switch Without Lever

Approximate Dimensions [mm (in.)]

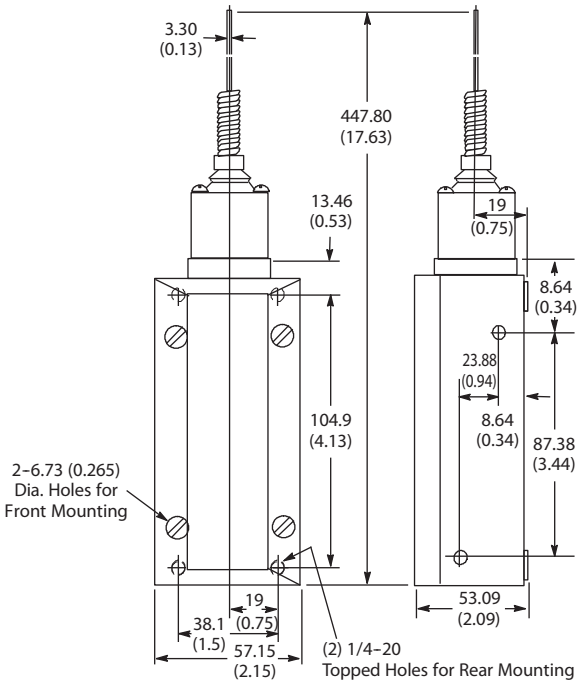

Approximate Shipping Wt. 0.9 kg (2 lb)

Mounting Hole Dimensions

2—0.265 Dia. through hole with 0.500 Dia. C'Bore 0.25 in. deep for front mounting.

2—1/4-20 Tapped holes 0.56 in. deep for rear mounting.

2—1/4-20 Tapped holes 0.5 in. deep for side mounting.

Note: For operating head and lever assembly dimensions not shown, see [h-11596203]. Conduit pipe opening 1/2 in. NPT.

Compact

Precision

Small Precision

Specifications

	Compact	Precision	Small Precision
Certifications	UL Listed, CSA Certified and CE Marked for all applicable directives	UL Listed, CSA Certified and CE Marked for all applicable directives	UL Recognized, CSA Certified, and CE Marked for all applicable directives
Enclosure Type Rating	NEMA 1, 3, 4, 6, 12, 13, and IP67	NonBooted: NEMA 1 and IP60 Booted: NEMA 1, 3, 4, and IP65	NEMA 1, 3, 4, 6, 13 and IP67
Mechanical Life	Approx. 10,000,000 operations ★	Approx. 10,000,000 operations ★	Approx. 10,000,000 operations ‡
Electrical Life	Approx. 200,000 operations (3 A 250V AC, resistive load) ★	Approx. 500,000 operations (15 A 250V AC, resistive load) ★	Approx. 500,000 operations (10 A 250V AC, resistive load) ‡
Operating Speed	Top Push: 0.1 mm…0.5 m per second Side Rotary: 1 mm…1 m per second	Top Push: 0.01 mm…0.5 m per second Lever Type: 0.02 mm…0.5 m per second	Top Push: 0.05 mm…0.5 m per second
Operating Frequency	Mechanical: 120 operations/minute; Electrical: 30 operations/minute	Mechanical: 120 operations/minute; Electrical: 20 operations/minute	Mechanical: 120 operations/minute; Electrical: 20 operations/minute
Operating Temperature [C (F)]	-10…+70 ° (14…158 °) with no icing	-10…+80 ° (14…176 °) with no icing	-10…80° (14…176°) with no icing
Protection Type	Quick blow fuse suitable for rated current is recommended	Quick blow fuse suitable for rated current is recommended	Quick blow fuse suitable for rated current is recommended
Contact Type	SPDT Form C - Top Push Panel Mount	SPDT Form C - Top Push Booted	SPDT Form C

★ Life expectancy has been calculated at an operating temperature of 5…35 °C (41…95 °F) and an operating humidity of 40…70%.

‡ Life expectancy has been calculated at an operating temperature of 20 °C (68 °F) and an operating humidity of 65%.

Small Precision

Rated Voltage	Non-Inductive Resistive Load	Inductive Load			Inrush Current		UL/CSA Approved Ratings						
			Motor Load				NEMA Rating Designation	Rated Voltage	A		Continuous Current	VA	VA
		Inductive	N.O.	N.C.	N.O.	N.C.			Make	Break			
125V AC	10 A	10 A	2.5 A	5 A	15 A max	30 A max	A300	120V AC	60	6	10	7200	720
250V AC	10 A	10 A	1.5 A	3 A				240V AC	30	3			
8V DC	10 A	6 A	2.5 A	5 A									
14V DC	10 A	6 A	2.5 A	5 A									
30V DC	6 A	5 A	2.5 A	5 A									
125V DC	0.5 A	0.05 A	0.05 A										
250V DC	0.25 A	0.03 A	0.03 A										

Specifications

Compact

Rated Voltage	Non-Inductive Resistive Load	Inductive Load			Inrush Current	
		Inductive	Motor Load			
			N.O.	N.C.	N.O.	N.C.
Standard Models						
125V AC	5 A	3 A	1.3 A	2.5 A	10 A max	20 A max
250V AC	5 A	2 A	0.8 A	1.5 A		
8V DC	5 A	5 A	3 A	3 A		
14V DC	5 A	4 A	3 A	3 A		
30V DC	4 A	3 A	3 A	3 A		
125V DC	0.4 A	0.4 A	0.05 A	0.05 A		
250V DC	0.2 A	0.2 A	0.03 A	0.03 A		
AC LED Models						
125V AC	5 A	3 A	1.3 A	2.5 A	10 A max	20 A max
125V DC	0.4 A	0.4 A	0.05 A	0.05 A		
DC LED Models						
30V DC	4 A	3 A	3 A	3 A	10 A max	20 A max
Low Current Models						
125V AC	0.1 A	—			10 A max	20 A max
8V DC	0.1 A					
14V DC	0.1 A					
30V DC	0.1 A					

UL/CSA Approved Ratings

NEMA Rating Designation	Rated Voltage	A		Continuous Current	VA	VA
		Make	Break			
B300	120V AC	30	3.0	5	3600	360
	240V AC	15	1.5			
AC LED Versions						
B150	120V AC	30	3	5	3600	360

Leakage Current for LED Models

	Voltage	Leakage Current	Resistance
AC LED	125	1.7 mA	68 kΩ
DC LED	30		15 kΩ

Precision

Rated Voltage	Non-Inductive Resistive Load	Inductive Load			Inrush Current		UL/CSA Approved Ratings		
		Inductive	Motor Load				Rated Voltage	Current	Hp
			N.O.	N.C.	N.O.	N.C.			
125V AC	15 A	15 A	2.5 A	5 A	15 A max	30 A max	120V AC	15 A	1/8 Hp 1/4 Hp
250V AC	15 A	2.5 A	1.5 A	3 A			250V AC	15 A	
480V AC	10 A	1.5 A	0.75 A	1.5 A			480V AC	10 A	
125V DC	0.5 A	0.5 A	0.05 A				125V DC	0.5 A	—
250V DC	0.25 A	0.25 A	0.03 A				250V DC	0.25 A	

Wiring Diagrams

Pre-leaded Models

COM	NO	NC	Ground
Black	Blue	Brown	Green/Yellow

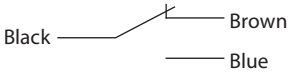

Quick-Disconnect Models

AC QD Pin-Out:		DC QD Pin-Out:	
Pin 1 = Common		Pin 1 = N.O.	
Pin 2 = N.O.		Pin 2 = Common	
Pin 3 = N.C.		Pin 3 = Grnd.	
Pin 4 = Grnd.	***Male Receptacle***	Pin 4 = N.C.	***Male Receptacle***

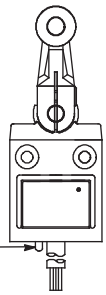

All compact models are available with LED.

Approximate Dimensions [mm (in.)]

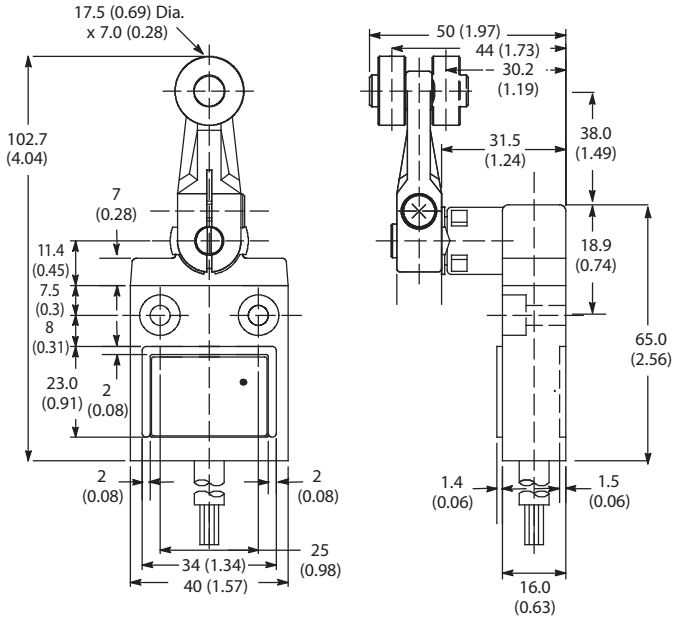

Rotary Arm

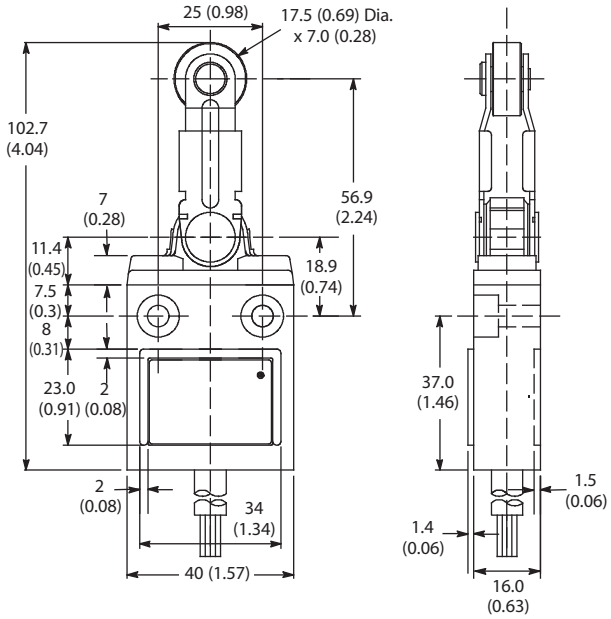

Center Rotary Arm

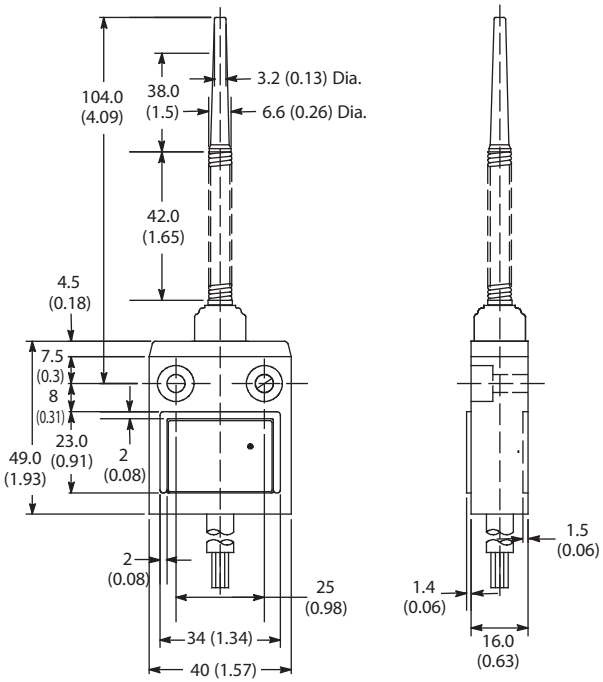

Wobble Stick

Counter Bore Diameter = 102 mm
Mounting Hole Diameter = 5.1 mm
Counter Bore Depth = 5.8 mm
Mounting Hole Depth = 10.1 mm
Cable Diameter = 8.5 mm

Approximate Dimensions [mm (in.)]

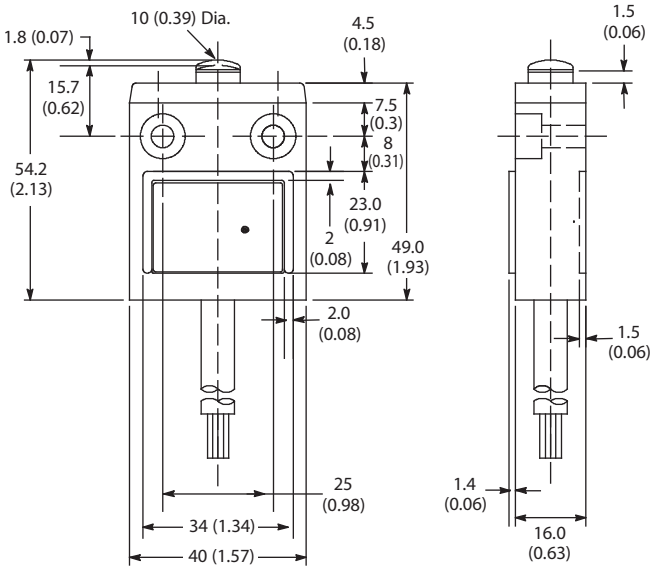

Top Push

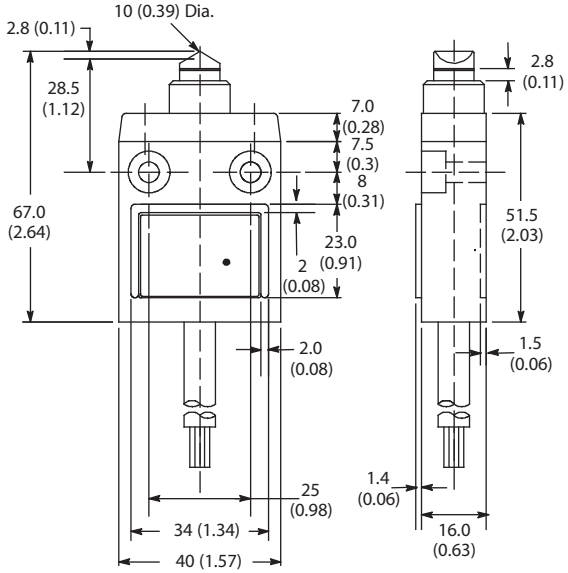

Top Push Bevel

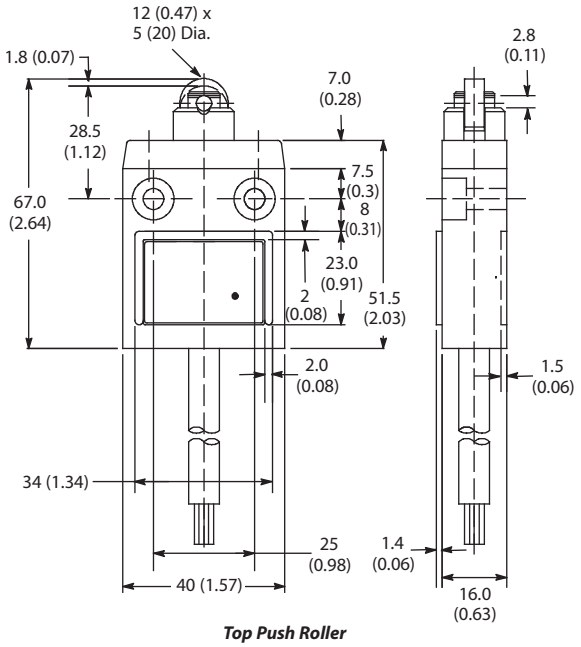

Top Push Roller

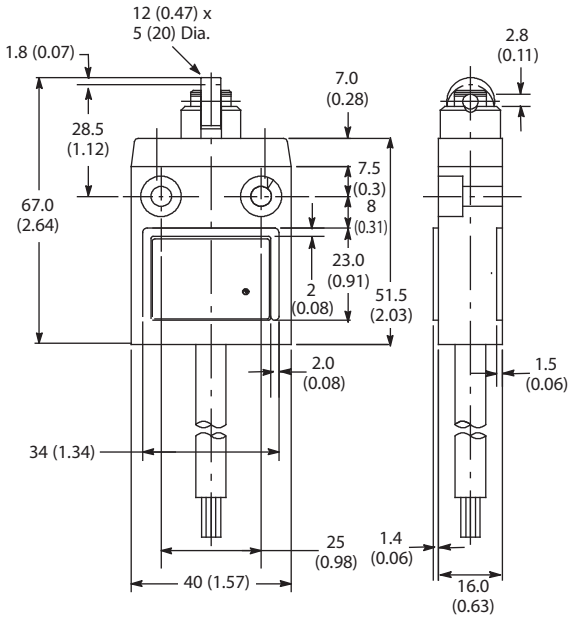

Top Push Cross Roller

Approximate Dimensions [mm (in.)]

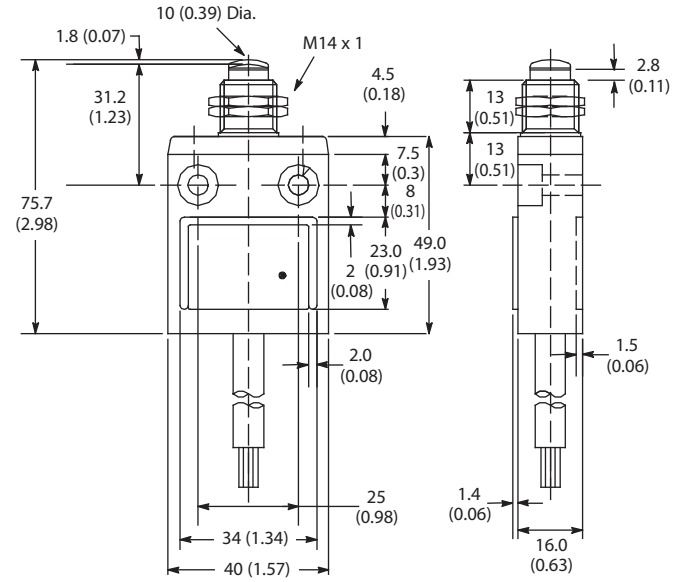

Top Push Panel Mount

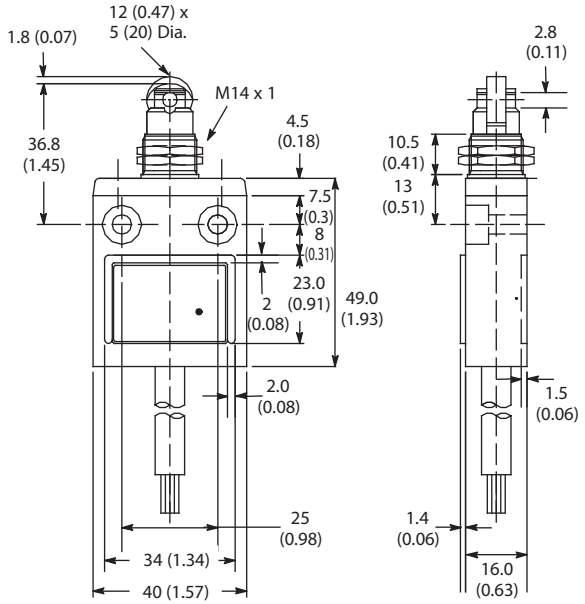

Top Push Roller Panel Mount

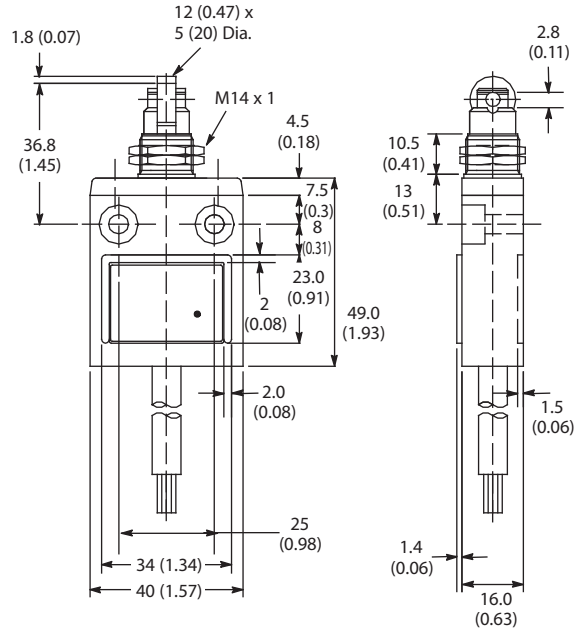

Top Push Cross Roller Panel Mount

Approximate Dimensions [mm (in.)]

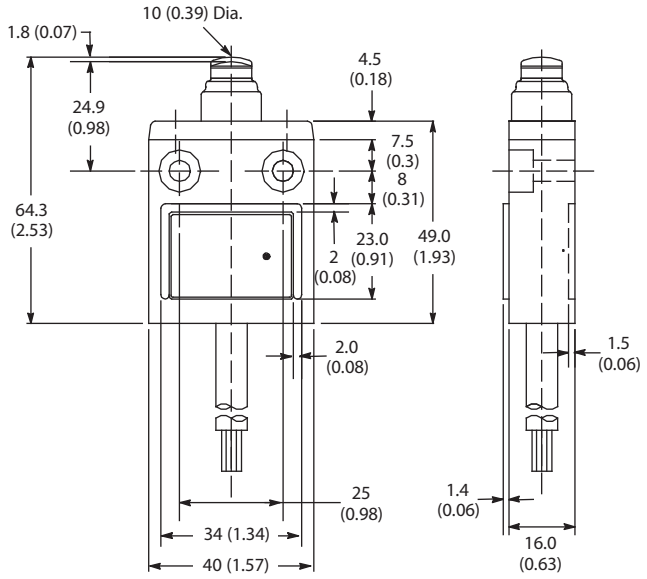

Top Push Booted Head

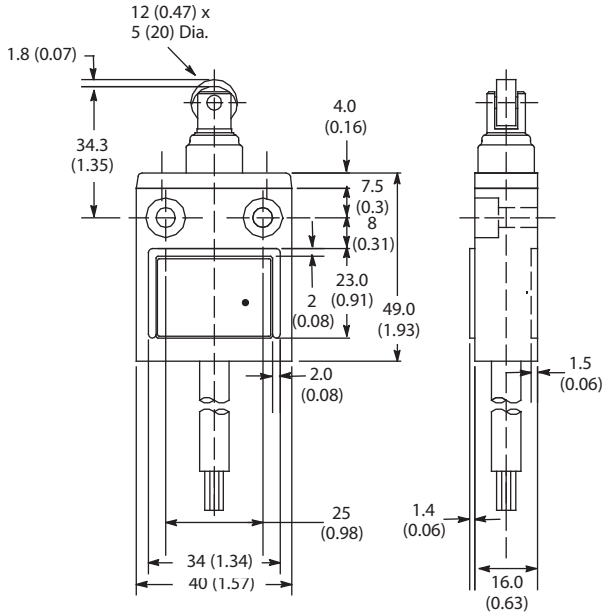

Top Push Roller Booted Head

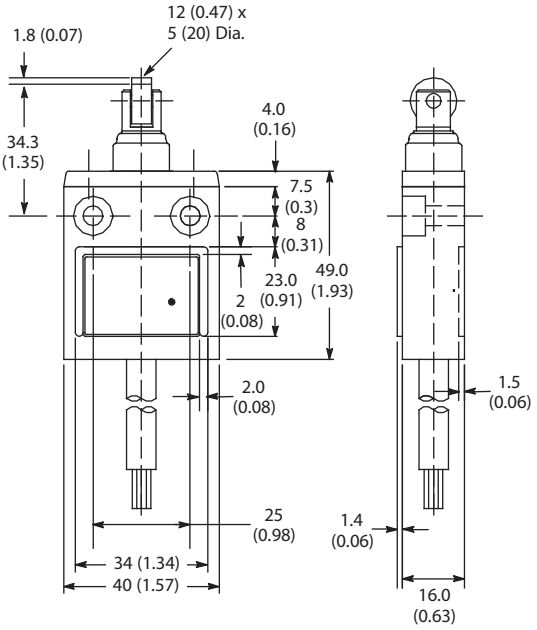

Top Push Cross Roller Booted Head

Wiring Diagrams

1	3	2	
Com	N.O.	N.C.	Com 1 — NC 2, NO 3

Approximate Dimensions [mm (in.)]

Side Mount Limit Switches

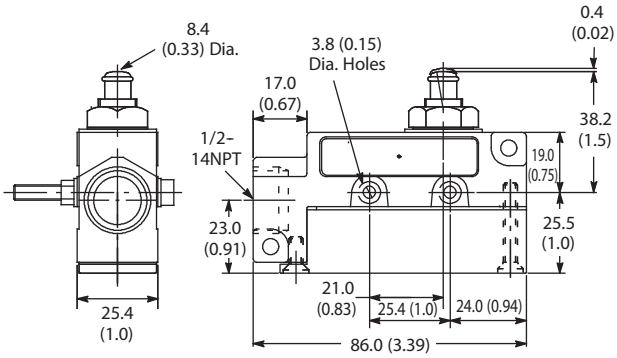

Cat. No. 802B-PSABXSX

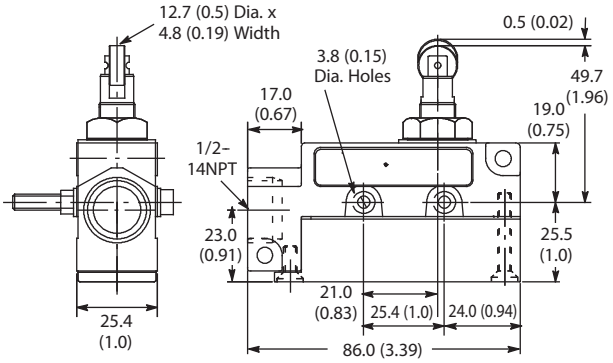

Cat. No. 802B-PSADXSX

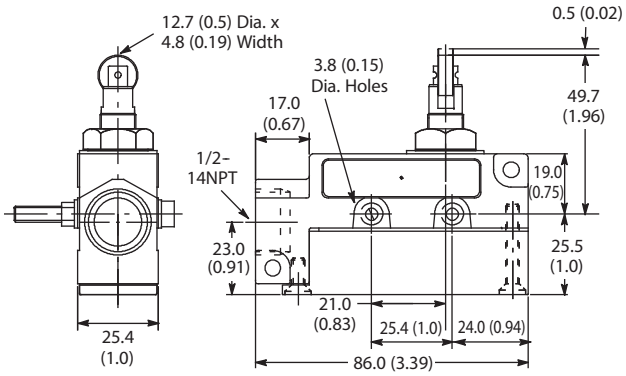

Cat. No. 802B-PSD1XSX

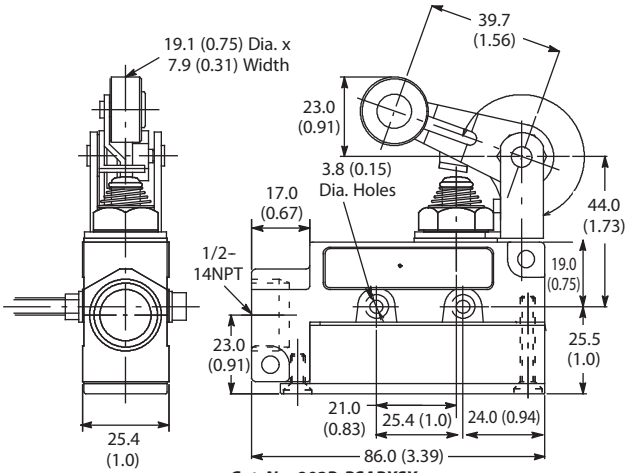

Cat. No. 802B-PSARXSX

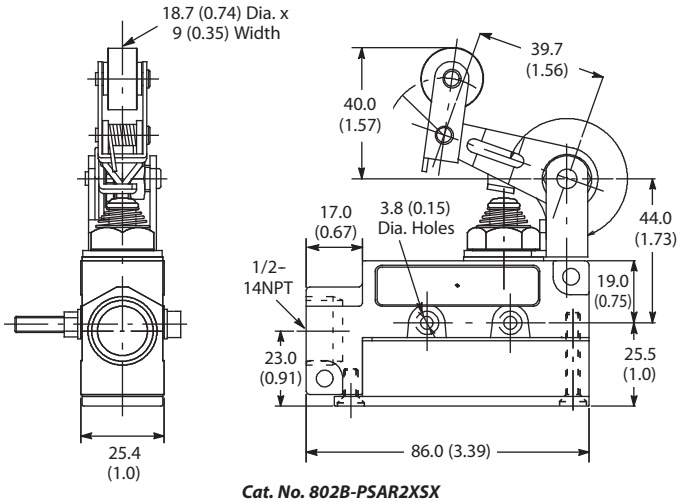

Cat. No. 802B-PSAR2XSX

Approximate Dimensions [mm (in.)]

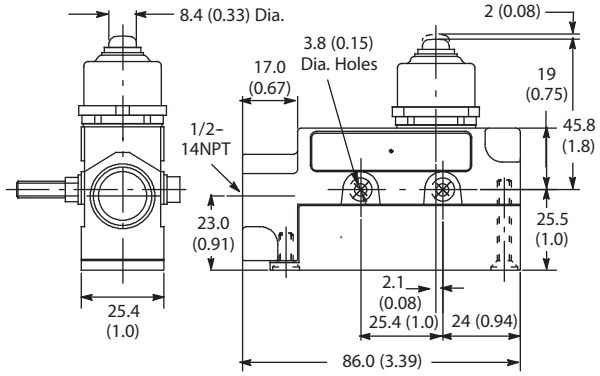

Cat. No. 802B-PSABBSX

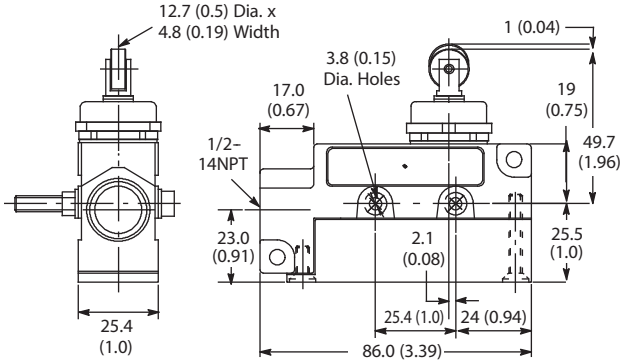

Cat. No. 802B-PSADBSX

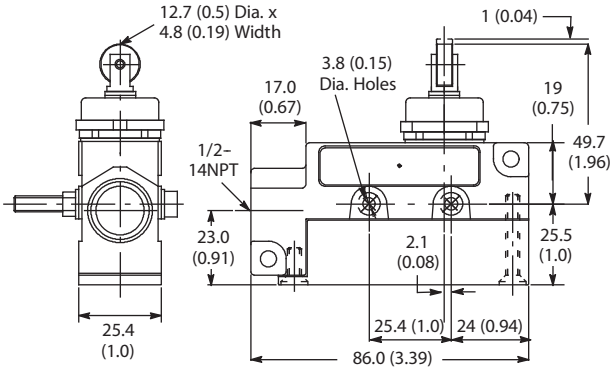

Cat. No. 802B-PSAD1BSX

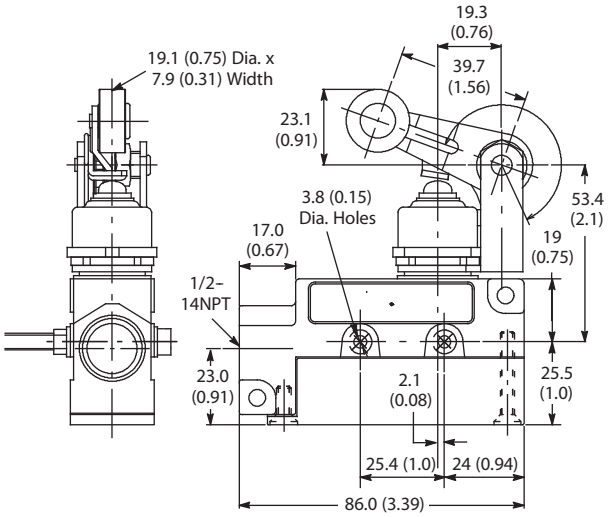

Cat. No. 802B-PSARBSX

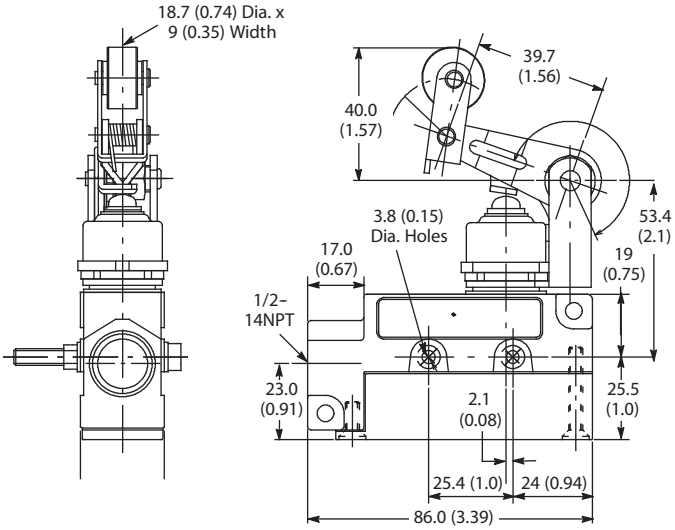

Cat. No. 802B-PSAR2BSX

Approximate Dimensions [mm (in.)]

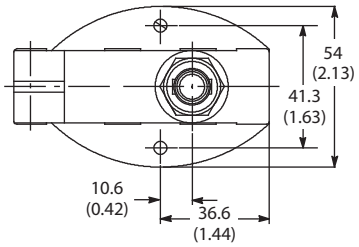

Top View

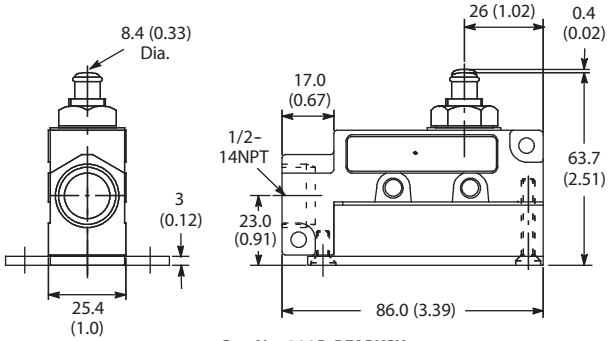

Cat. No. 802B-PFABXSX

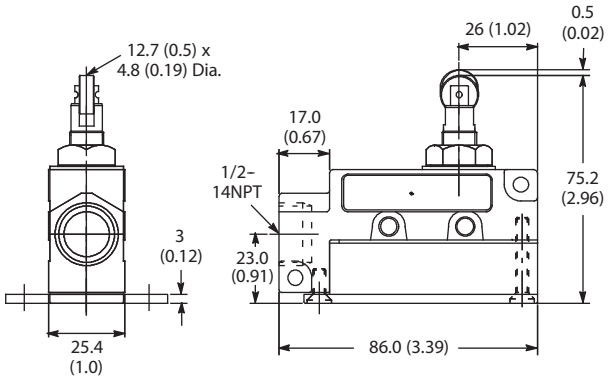

Cat. No. 802B-PFADXSX

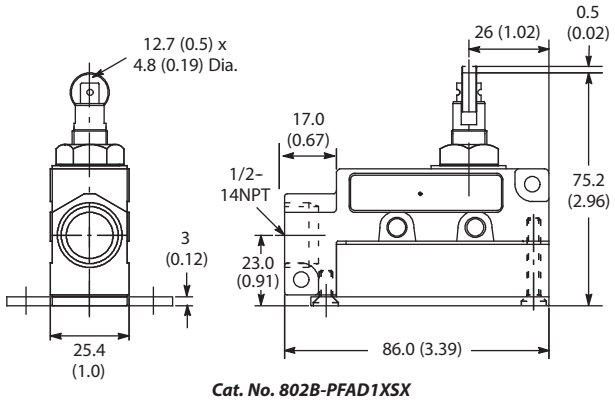

Cat. No. 802B-PFAD1XSX

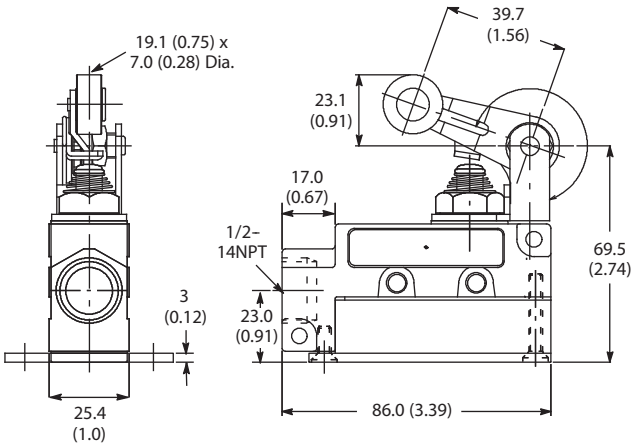

Cat. No. 802B-PFARXSX

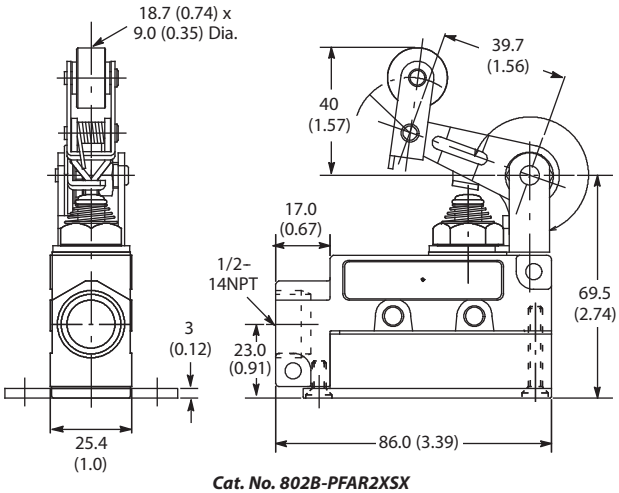

Cat. No. 802B-PFAR2XSX

Approximate Dimensions [mm (in.)]

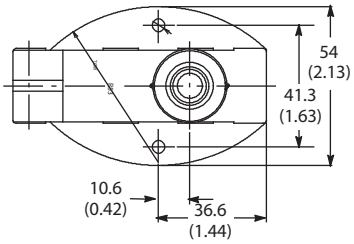

Top View

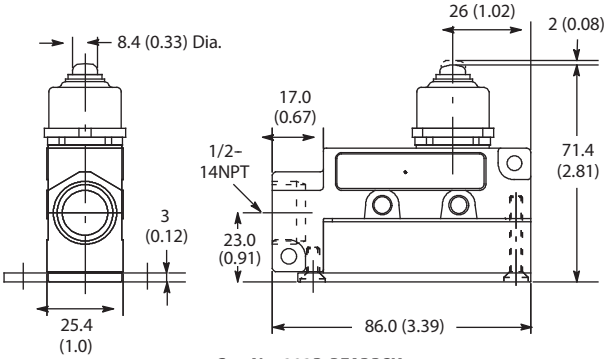

Cat. No. 802B-PFABBSX

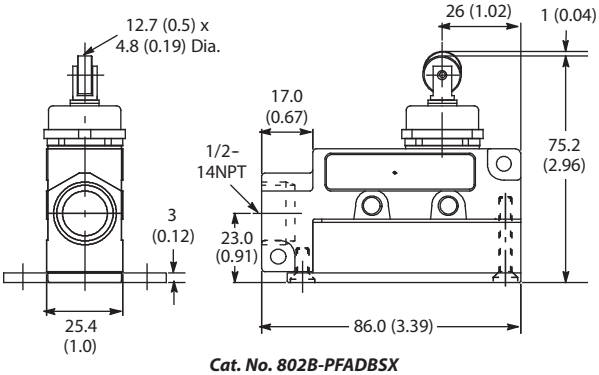

Cat. No. 802B-PFADBSX

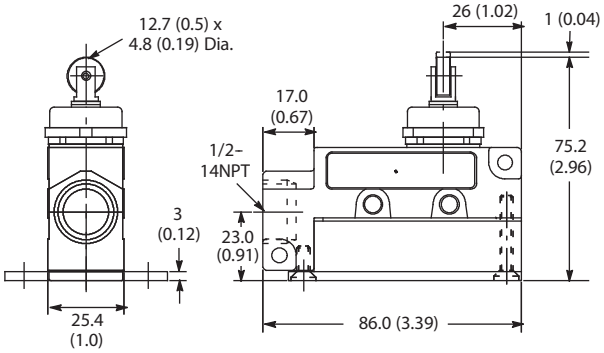

Cat. No. 802B-PFAD1BSX

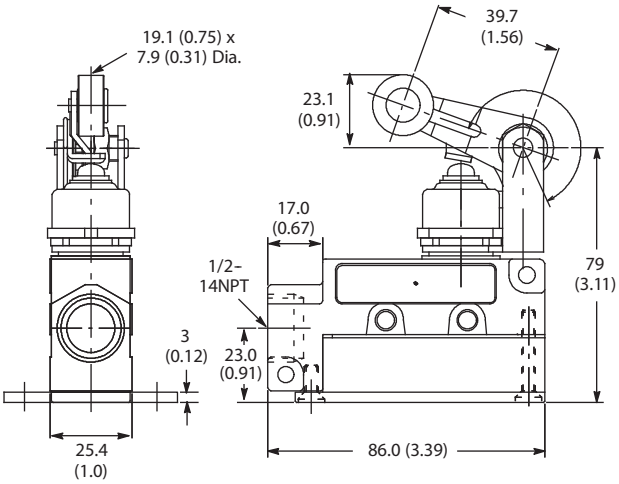

Cat. No. 802B-PFARBSX

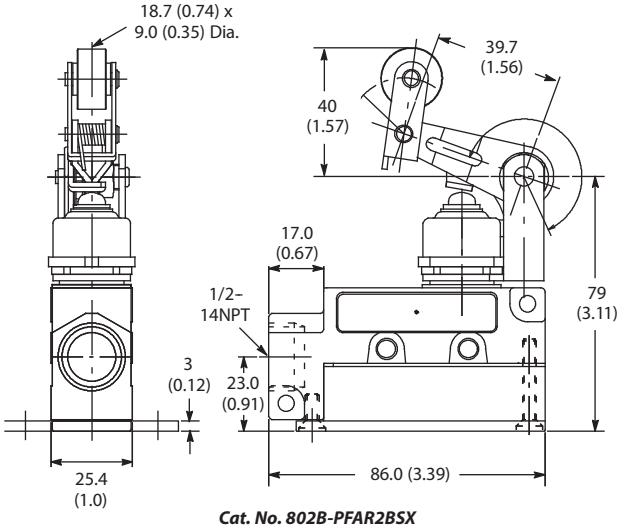

Cat. No. 802B-PFAR2BSX

Wiring Diagrams

1	3	2	
Com	N.O.	N.C.	Com 1 — NC 2, NO 3

Approximate Dimensions [mm (in.)]

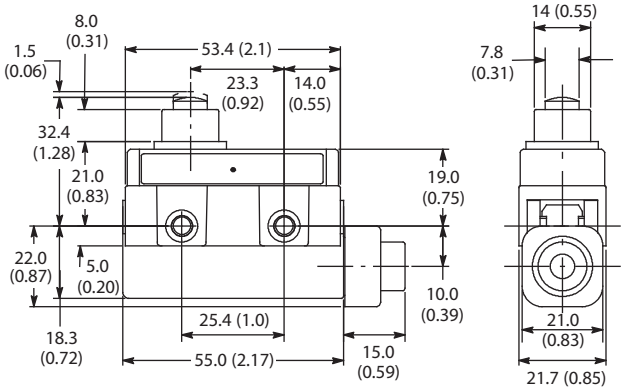

Cat. No. 802B-SSABXSX

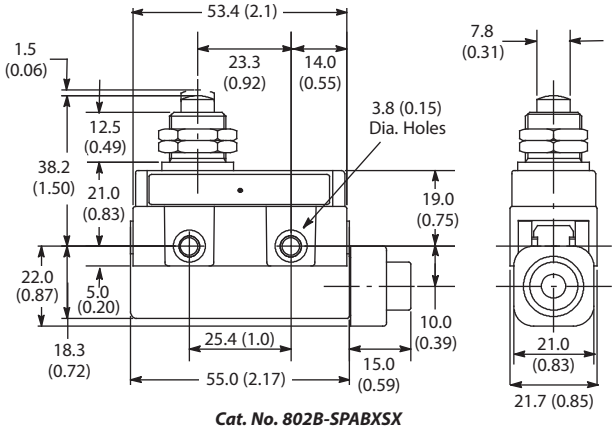

Cat. No. 802B-SPABXSX

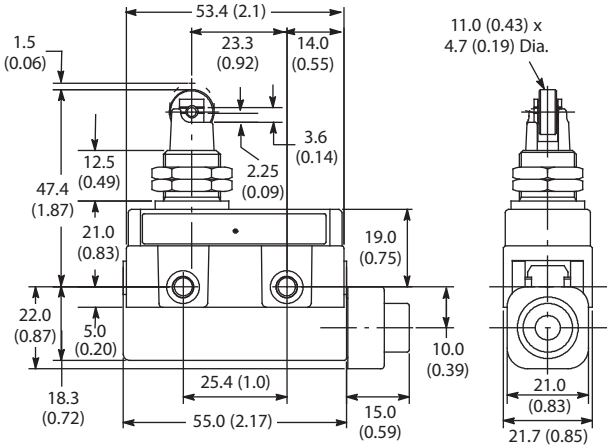

Cat. No. 802B-SPADXSX

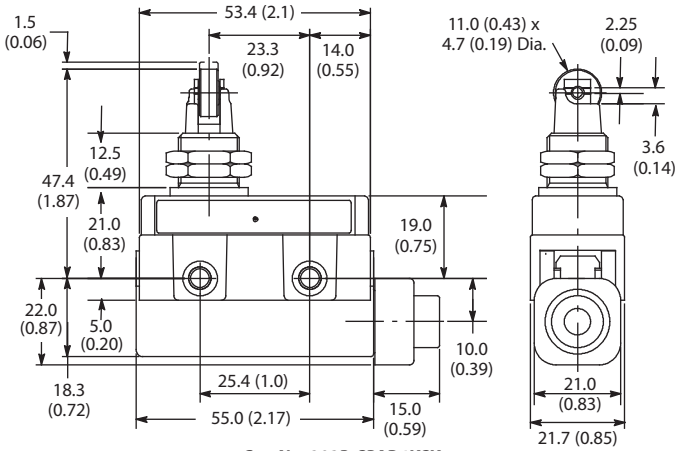

Cat. No. 802B-SPAD1XSX

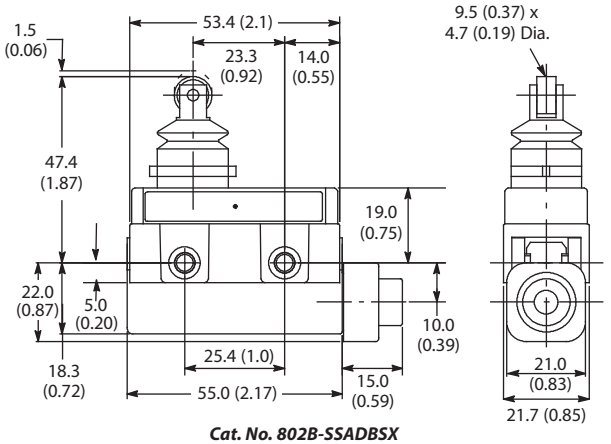

Cat. No. 802B-SSADBSX

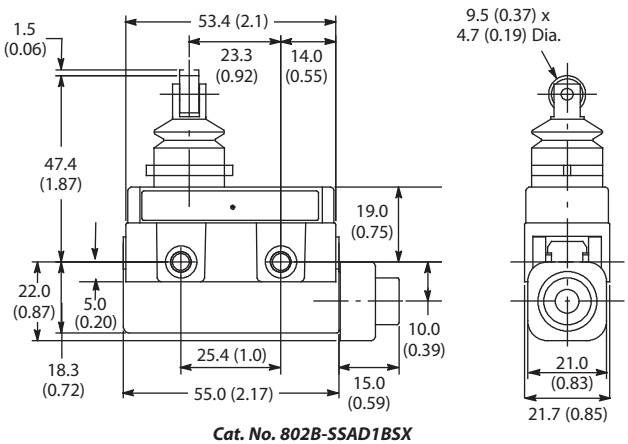

Cat. No. 802B-SSAD1BSX

Approximate Dimensions [mm (in.)]

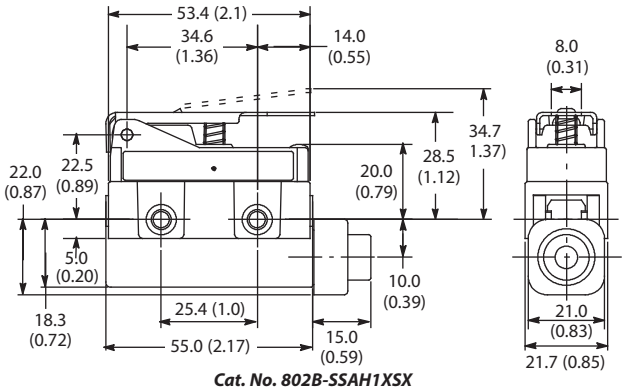

Cat. No. 802B-SSAH1XSX

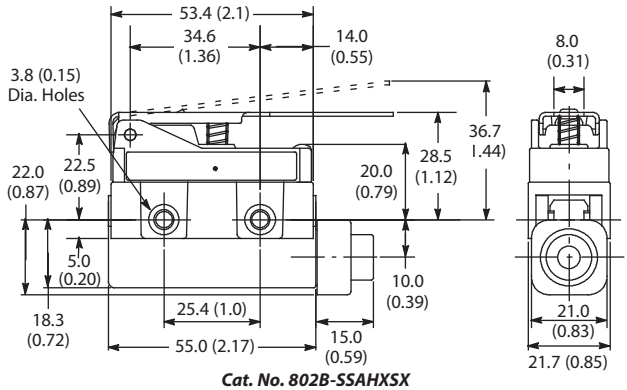

Cat. No. 802B-SSAHXSX

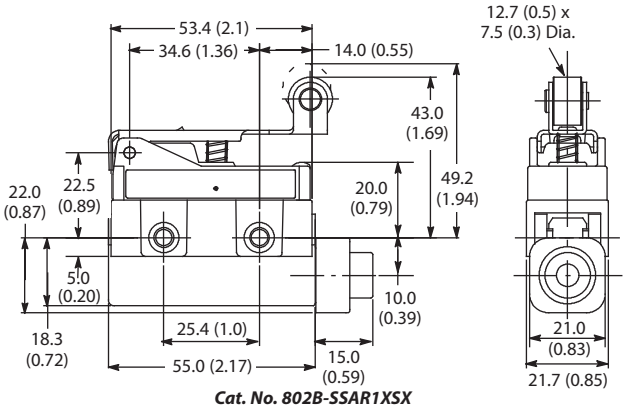

Cat. No. 802B-SSAR1XSX

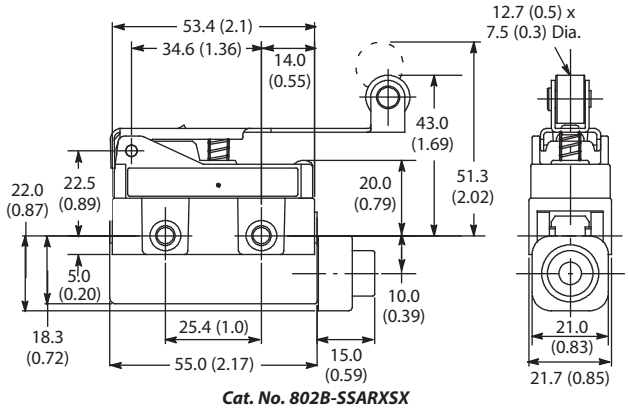

Cat. No. 802B-SSARXSX

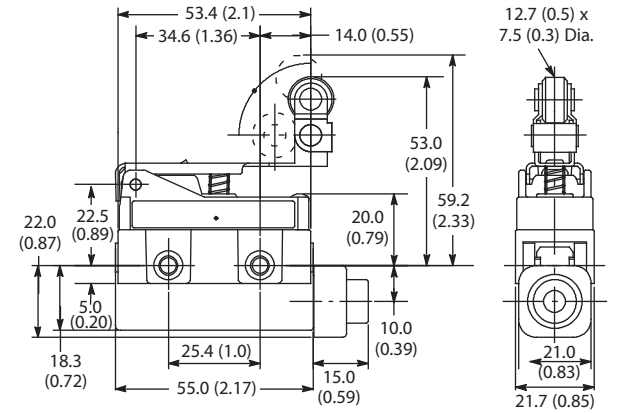

Cat. No. 802B-SSAR3XSX

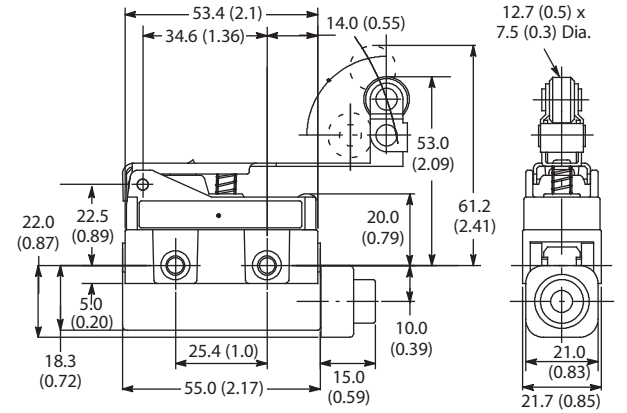

Cat. No. 802B-SSAR2XSX

Specifications

Safety Ratings	
Standards	EN 954-1, ISO 13849-1, IEC/EN 60204-1, NFPA 79, EN 1088, ISO 14119, IEC/EN 60947-5-1, ANSI B11.19, AS 4024.1
Safety Classification	Cat.1 Device per EN 954-1 Dual channel limit switch suitable for Cat. 3 or 4 systems when ganged together
Certifications	cULus Listed, TÜV and CE Marked for all applicable directives
Outputs	
Safety Contacts ★	1 N.C. snap-acting, 2 N.C. slow-acting
Auxiliary Contacts	1 N.O. snap-acting
Thermal Current I_{th}	10 A
Rated Insulation Voltage	300V AC
Contact Rating	

Maximum AC Contact Rating Per Pole‡

NEMA Rating Designation	Max. Voltage	Amperes		Continuous Carrying Current [A]	Volt Amperes	
		Make	Break		Make	Break
AC15/B300	120	30	3.0	5	3600	360
	240	15	1.5			

Maximum DC Contact Rating Per Pole‡

DC13/Q300	240	0.27	0.27	2.5	69	69

Operating Characteristics	
Actuation Speed, Max.	250 mm/s
Actuation Speed, Min.	100 mm/min.
Actuation Frequency, Max.	6000 ops/hr
Mechanical Life	1 x 10^7 operations with no electrical load
Environmental	
Enclosure Type Rating	Type 1, IP65, IP66, IP67, and IP69K (preleaded versions)
Operating Temperature [C (F)]	2…70 ° (35.6…158 °)
Pollution Degree	3
Physical Characteristics	
Housing Material	Die-cast alloy
Actuator Material	Various polymers and metals
Mounting	2 x M4, any position
Vibration	IEC 68-2-6 (10…55 Hz, 0.35 mm amplitude)
Shock	IEC 68-2-7 (30 Gn 3 pulses per axis)
Color	Red body/black head

★ The safety contacts are described as normally closed (N.C.) i.e., with the guard closed, actuator in place (where relevant) and the machine able to be started.

‡ Maximum for:

4-pin Male Micro M12 Connectors (D4 suffix)	
AC	**DC**
30V, 3 A	30V, 3 A
5-pin Male Micro M12 Connectors (D5 suffix)	
AC	**DC**
60V, 3 A	60V, 3 A

440P IEC Style Limit Switches

22 mm Compact Metal Position Switches

Typical Wiring Diagrams

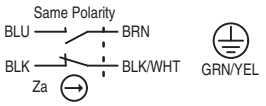

1 N.C.

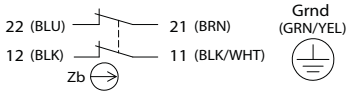

2 N.C.

Counter Sinkhole

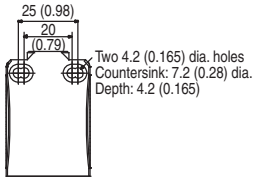

Approximate Dimensions [mm (in.)]

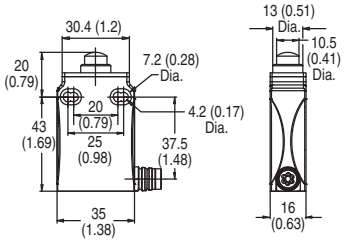

Dome Plunger

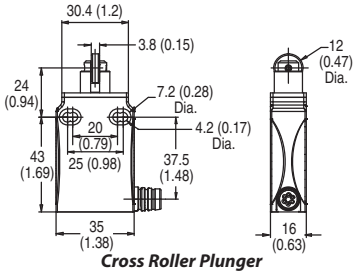

Cross Roller Plunger

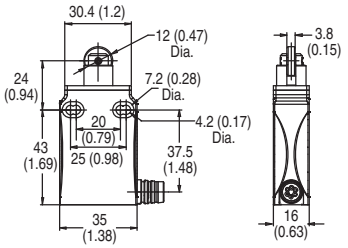

Roller Plunger

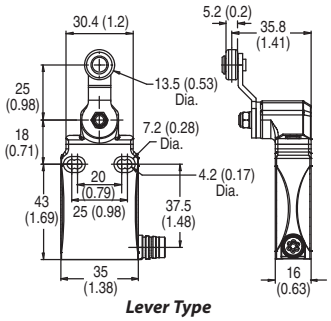

Lever Type

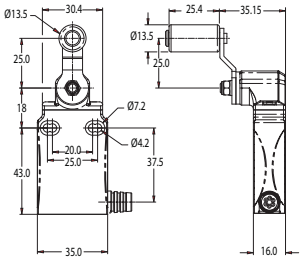

Wide Roller Plunger

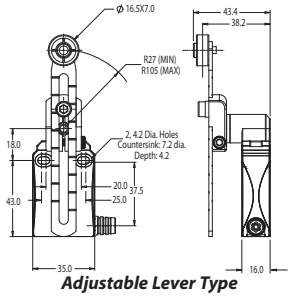

Adjustable Lever Type

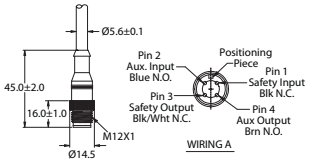

4-pin Micro Quick Disconnect

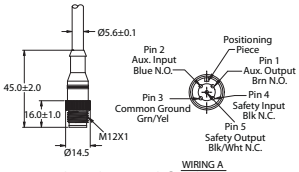

5-pin Micro Quick Disconnect

Note: Only non-panel mount pre-leaded side out models shown. Body dimensions for panel mount models as well as pre-leaded bottom out and 4-pin/5-pin micro connector mounted on a 6 in. pigtail models are identical. For other dimension drawings, refer to Installation and Operating Instructions.

- Side cable style shows strain relief only. Units include a 2 m integral cable.
- Bottom cable style units have same dimensions as side cable style.
- Panel mount clearance hole = 13 mm (0.51 in.)

Approximate Dimensions [mm (in.)]

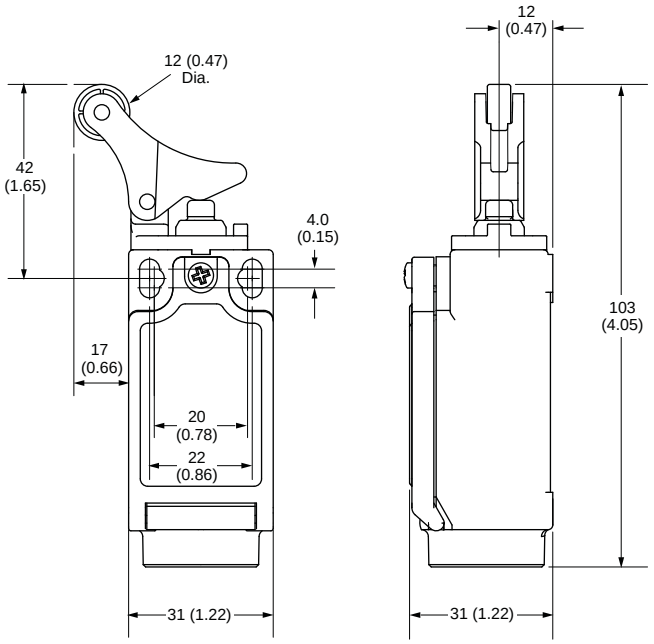

Offset Hinge

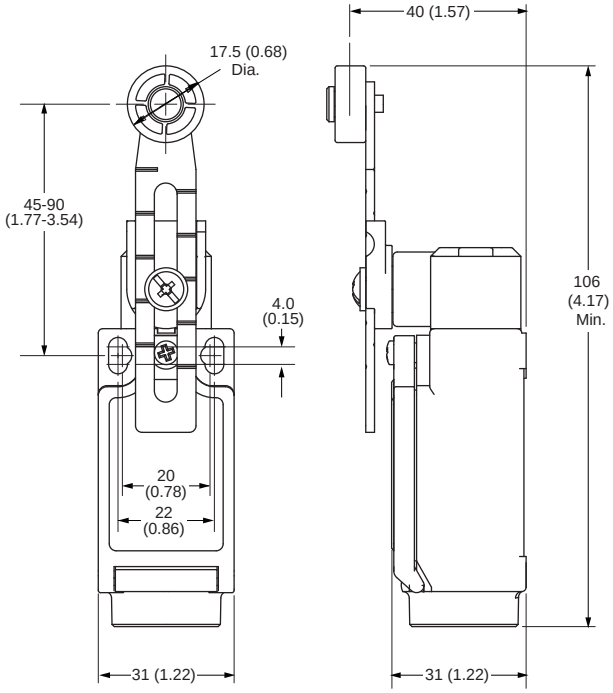

Adjustable Lever

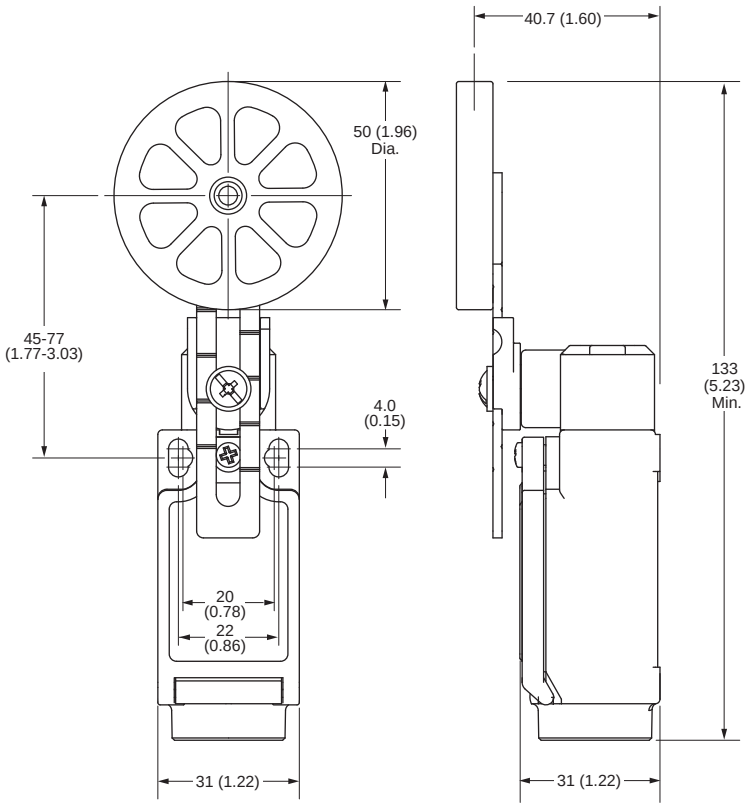

Rubber Roller

440P IEC Style Limit Switches

22 mm Plastic Position Switches

Specifications

Safety Ratings					
Standards		EN 954-1, ISO 13849-1, IEC/EN 60204-1, NFPA 79, EN 1088, ISO 14119, IEC/EN 60947-5-1, ANSI B11.19, AS 4024.1			
Safety Classification		Cat. 1 Device per EN 954-1 Dual channel limit switch suitable for Cat. 3 or 4 systems and used with a safety monitoring device			
Certifications		cULus Listed, TÜV, CCC, and CE Marked for all applicable directives			
Outputs					
Safety Contacts ‡		1 N.C. snap acting, 2 N.C. or 3 N.C. slow acting			
Auxiliary Contacts		1 N.O. (except 3 N.C. versions)			
Thermal Current I_{th}		10 A			
Rated Insulation Voltage		600V AC			
Switching Current @ Voltage, Min.		25 mA @ 5V DC			
Utilization Category		**Contact Specification ♣**			
A600/AC-15	(Ue)	600V	500V	240V	120V
	(Ie)	1.2 A	1.4 A	3.0 A	6.0 A
N600/DC-13	(Ue)	600V	500V	250V	125V
	(Ie)	0.4 A	0.55 A	1.1 A	2.2 A
Operating Characteristics					
Actuation Speed, Max.		250 mm/s			
Actuation Speed, Min.		100 mm/min			
Actuation Frequency, Max.		6000 operation per hour			
Mechanical Life		1 x 10^7 operations with no electrical load			
Environmental					
Enclosure Type Rating		IP66			
Operating Temperature [C (F)]		-25…+65 ° (-13…+149 °)			
Pollution Degree		3			
Physical Characteristics					
Housing Material		UL Approved glass-filled polybutylene terephthalate			
Actuator Material		Various polymers and metals			
Mounting		2 x M4, Any position			
Vibration		IEC 68-2-6 (10…55 Hz, 0.35 mm amplitude)			
Shock		IEC 68-2-7 (30 Gn 3 pulses per axis)			
Conduit Entry		M20 or 1/2 inch NPT			
Color		Red			

★ Usable for ISO 13849-1:2006 and IEC 62061. Data other than B10d is based on:
- Usage rate of 1op/10 mins., 24 hrs/day, 360 days/year, representing 51840 operations per year
- Mission time/Proof test interval of 38 years

‡ The safety contacts are described as normally closed (N.C.) i.e., with the guard closed, actuator in place (where relevant) and the machine able to be started.

♣ Maximum for:

Two-Circuit D4 4-Pin Micro Connector	
AC	**DC**
250V, 2.5 A	250V, 2.5 A
Three-Circuit R6 6-Pin Micro Connector	
AC	**DC**
30V, 2 A	30V, 2 A

Wiring Diagrams

Two-Circuit Type D4 4-Pin Micro Connector

Connector Pinout		1 N.C. + 1 N.O.	
		Terminal	Contact
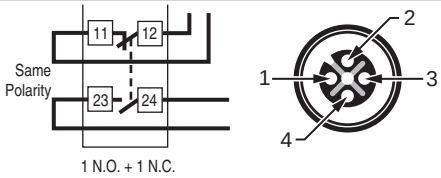	1	11	N.C.
	3	12	
	2	23	N.O.
	4	24	

Connector Ratings

	Max. Ratings		Applicable Standards
	AC	DC	
4-Pin Micro (M12)	250V, 2.5 A	250V, 2.5 A	IEC 61076-2-101:2003
6-Pin Micro (M12)	30V, 2 A	30V, 2 A	

Three-Circuit Type R6 6-Pin Micro Connector

Connector Pinout		3 N.C.		2 N.C. + 1 N.O.	
		Terminal	Contact	Terminal	Contact
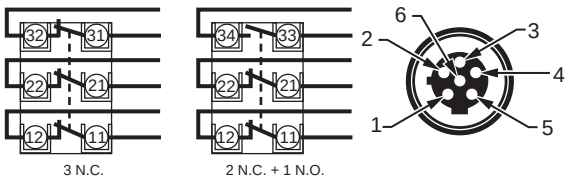	1	11	N.C.	11	N.C.
	5	12		12	
	2	21	N.C.	21	N.C.
	6	22		22	
	3	33	N.O.	31	N.C.
	4	34		32	

Approximate Dimensions [mm (in.)]

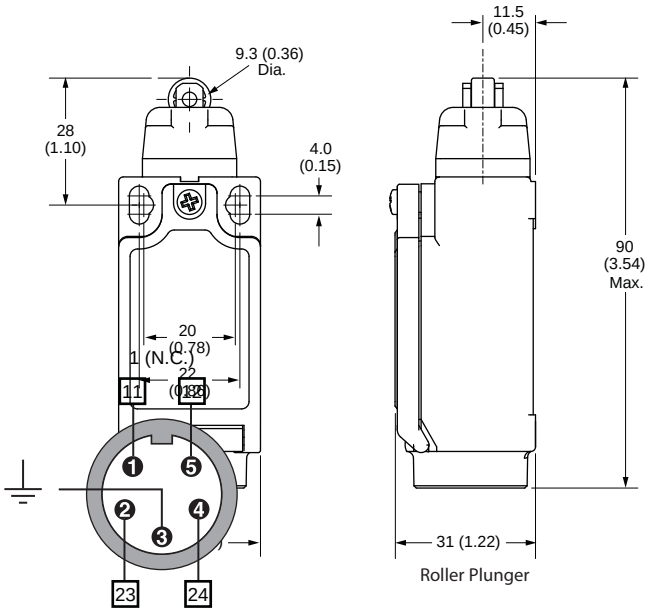

Auxiliary Circuit (N.O.)

Roller Plunger

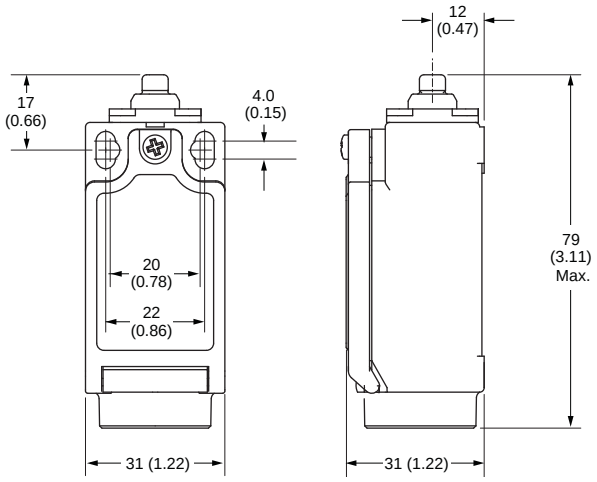

Dome Plunger

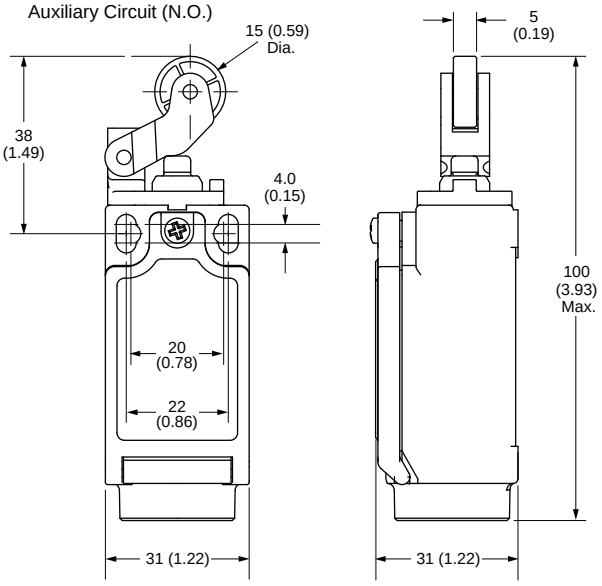

Hinge Lever

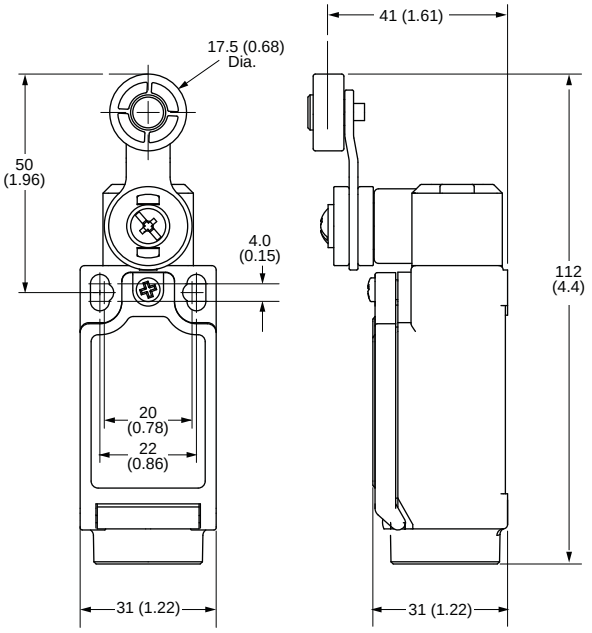

Short Lever
(Metal and Plastic Roller)

Approximate Dimensions [mm (in.)]

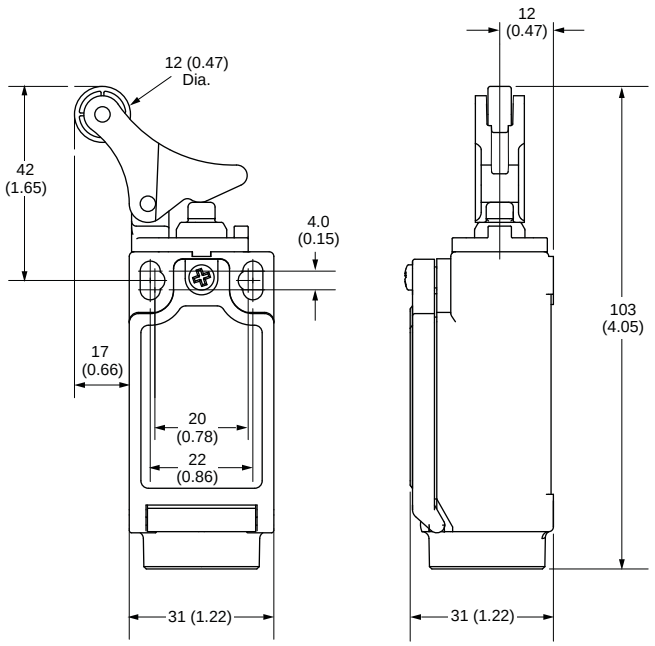

Offset Hinge

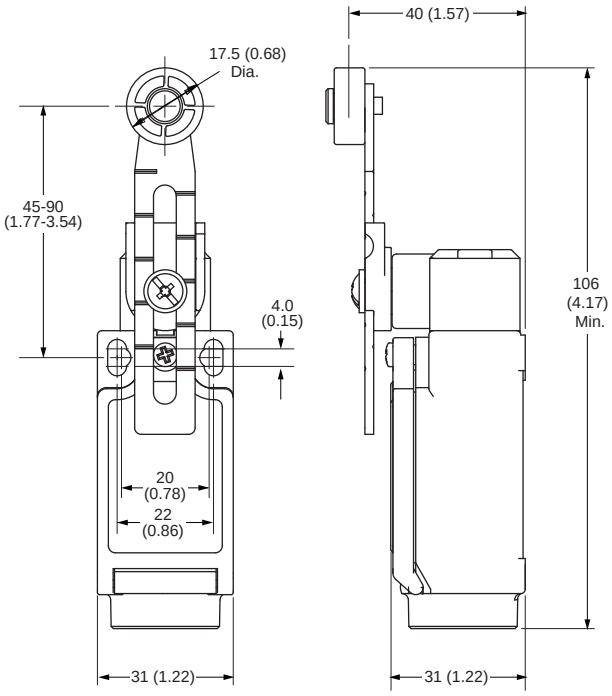

Adjustable Lever

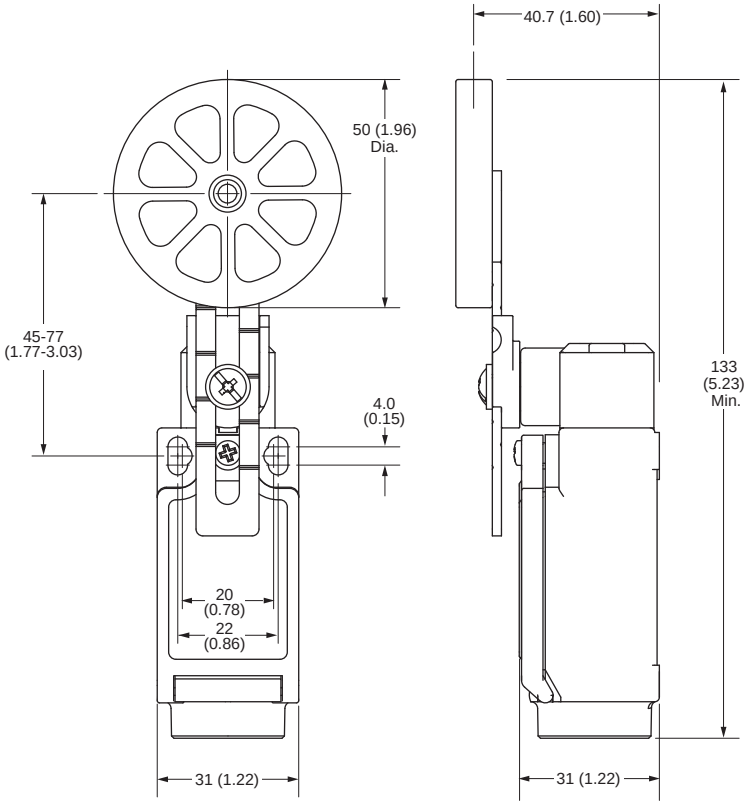

Rubber Roller

440P IEC Style Limit Switches

30 mm Metal Position Switches

Specifications

Safety Ratings					
Standards		EN954-1, ISO13849-1, IEC/EN60204-1, NFPA79, EN1088, ISO14119, IEC/ EN60947-5-1, ANSI B11.19, AS4024.1			
Safety Classification		Cat. 1 Device per EN954-1 Dual-channel limit switch suitable for Cat. 3 or 4 systems and used with a safety monitoring device			
Certifications		cULus Listed, TÜV, CE, and CCC Marked for all applicable directives			
Outputs					
Safety Contacts ‡		1 N.C. snap acting, 2 N.C., 3 N.C. or 4 N.C. slow acting			
Auxiliary Contacts		1 N.O. (with 2 N.C.)			
Thermal Current (I_{Ith})		8 A			
Rated Insulation Voltage		600V AC			
Switching Current @ Voltage, Min.		25 mA @ 5V DC			
Utilization Category		**Contact Specification§**			
A600/AC-15	(Ue)	600V	500V	240V	120V
	(Ie)	1.2 A	1.4 A	3.0 A	6.0 A
N600/DC-13	(Ue)	600V	500V	250V	125V
	(Ie)	0.4 A	0.55 A	1.1 A	2.2 A
Operating Characteristics					
Actuation Speed, Max.		250 mm/s			
Actuation Speed, Min.		100 mm/min			
Actuation Frequency, Max.		6000 operations per hour			
Mechanical Life		1 x 10^7 operations with no electrical load			
Environmental					
Enclosure Type Rating		IP66			
Operating Temperature [C (F)]		-25…+65 ° (-13…+176 °)			
Pollution Degree		3			
Physical Characteristics					
Housing Material		Die-cast alloy			
Actuator Material		Various polymers and metals			
Mounting		2 x M5, any position			
Vibration		IEC 68-2-6 (10…55 Hz, 0.35 amplitude)			
Shock		IEC 68-2-7 (30 Gn 3 pulses per axis)			
Conduit Entry		M20 or 1/2 inch NPT			
Color		Red			

‡ The safety contacts are described as normally closed (N.C.) i.e., with the guard closed, actuator in place (where relevant) and the machine able to be started.

§ Maximum for:

Two-Circuit N5 5-Pin Mini Connector	
AC	**DC**
300V, 2.5 A	300V, 2.5 A
Four-Circuit M9 12-Pin M23 Connector	
AC	**DC**
60V, 2.5 A	60V, 2.5 A

Typical Wiring Diagrams

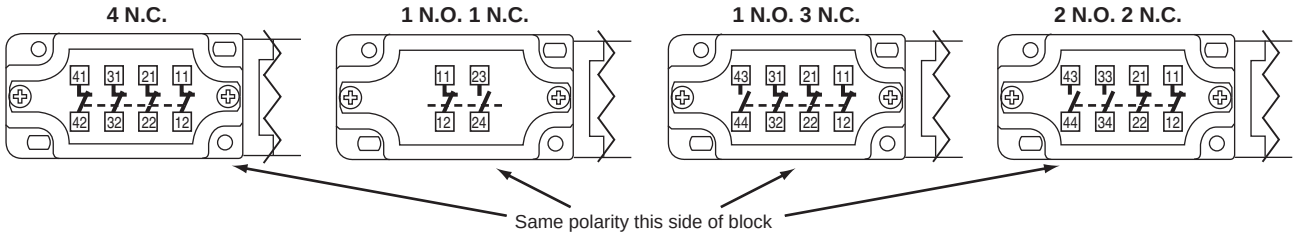

N5 Connector 2 Circuit 5-Pin Mini Connector

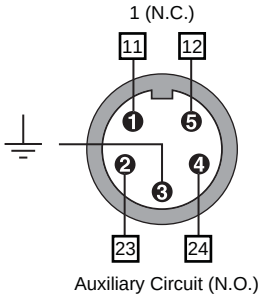

Connector Ratings

	Max. Ratings		Applicable Standards
	AC	DC	
5-Pin Mini (M12)	300V, 2.5 A	300V, 2.5 A	IEC 61076-2-101:2003
12-Pin (M23)	60V, 2.5 A	60V, 2.5 A	

M9 12-Pin M23 Connector

Connector Pinout		4 N.C.		3 N.C. 1 N.O.		3 N.C.	
		Terminal	Contact	Terminal	Contact	Terminal	Contact
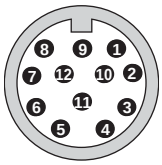	1	11	N.C.	11	N.C.	11	N.C.
	3	12		12		12	
	4	21	N.C.	21	N.C.	21	N.C.
	6	22		22		22	
	7	31	N.C.	31	N.C.	33	N.O.
	8	32		32		34	
	9	41	N.C.	43	N.O.	43	N.O.
	10	42		44		44	
	12	Ground					

Approximate Dimensions [mm (in.)]

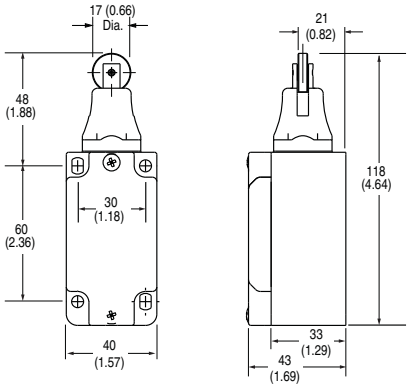

Roller Plunger

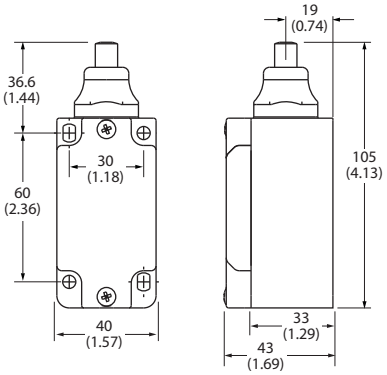

Dome Plunger

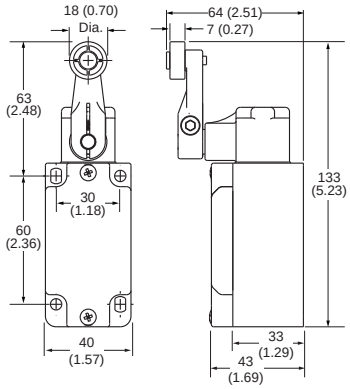

Short Lever
(Metal & Plastic Roller)

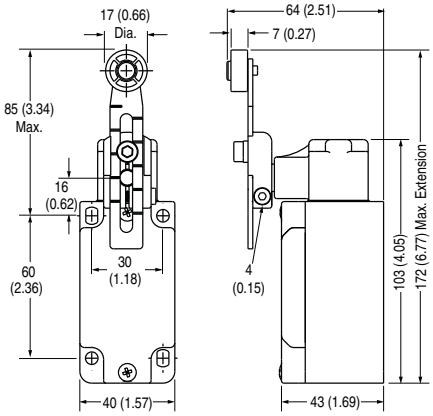

Adjustable Lever

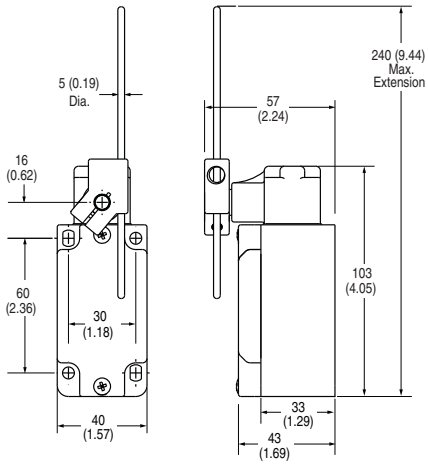

Rod Lever

Approximate Dimensions [mm (in.)]

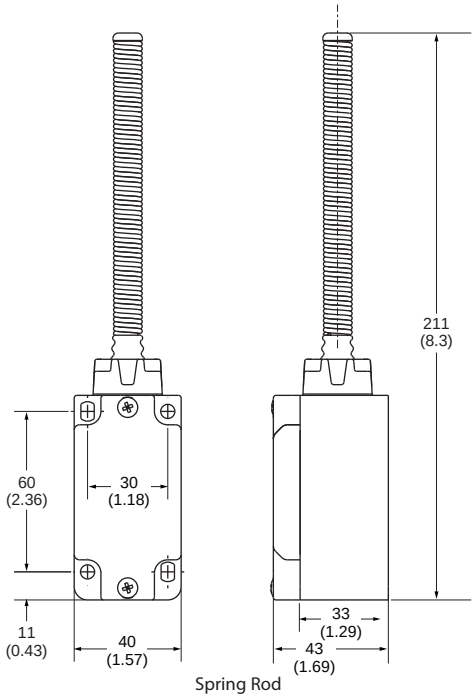

Spring Rod

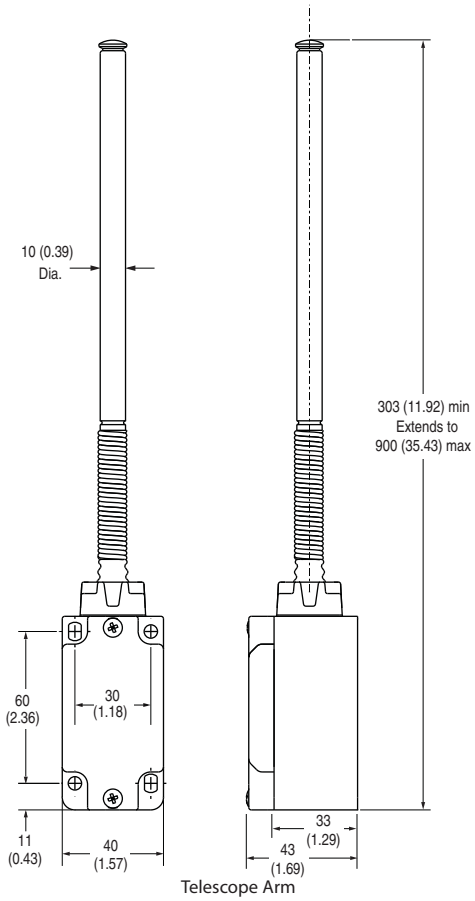

Telescope Arm

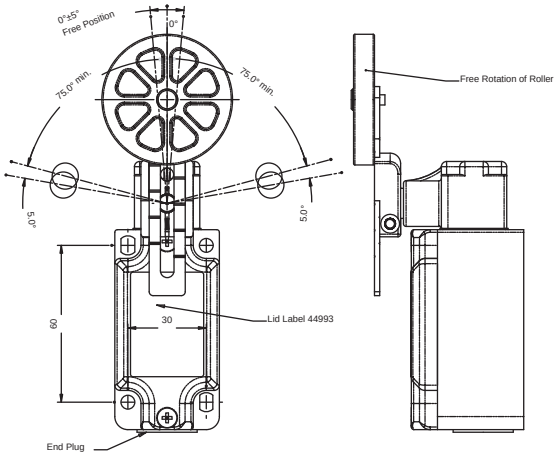

Rubber Roller

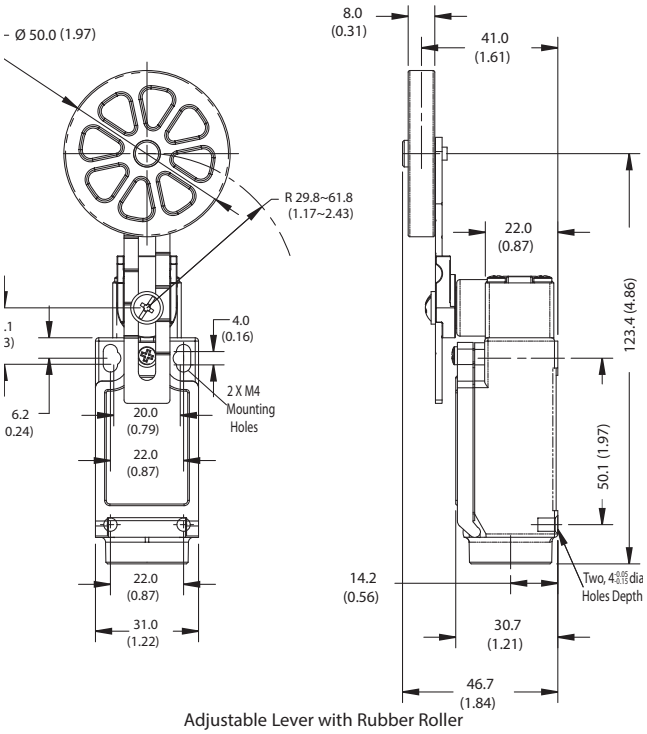

Adjustable Lever with Rubber Roller

440P IEC Style Limit Switches

15 mm Plastic Position Switches

Imp 1

Imp 2

Specifications

Safety Ratings			
Standards	EN 954-1, ISO 13849-1, IEC/EN 60204-1, NFPA 79, EN 1088, ISO 14119, IEC/ EN 60947-5-1, ANSI B11.19, AS 4024.1		
Safety Classification	Cat. 1 Device per EN954-1 Dual channel limit switch suitable for Cat. 3 or 4 systems		
Functional Safety Data ★ **Note**: For up-to-date information, visit *http://www.ab.com/Safety/...*	B10d = > 2 x 10^6 operations at min. load PFH_D = > 3 x10^{-7} MTTFd = > 385 years Dual channel interlock may be suitable for Performace levels Ple or Pld (according to ISO 13849-1:2006) and for use in SIL2 or SIL3 systems (according to IEC 62061) depending on application characteristics		
Certifications	CE Marked for all applicable directives and CSA NRTL/C		
Outputs			
Safety Contacts ‡	1 N.C. positive break		
Auxiliary Contacts	1 N.O.		
Thermal Current/$_{Ith}$	10 A (Ith)		
Rated Insulation Voltage	(Ui) 500V		
Switching Current @ Voltage, Min.	25 mA @ 5V DC		
Utilization Category			
AC-15 (Ue)	500V	250V	100V
(Ie)	1 A	2 A	5 A
DC (Ue)	250V	24V	
(Ie)	0.5 A	2 A	
Operating Characteristics			
Actuation Speed, Max.	160 mm (6.29 in.)/s		
Actuation Speed, Min.	100 mm (3.93 in.)/min		
Actuator Travel, Max.	5 mm (0.20 in.)		
Actuation Frequency, Max.	2 cycles/s		
Mechanical Life	10,000,000 operations		
Electrical Life	1,000,000 operations		
Mechanical Life	10,000,000 operations		
Environmental			
Enclosure Type Rating	IP30		
Operating Temperature [C (F)]	-25…+80 ° (-13…+176 °)		
Pollution Degree	3		
Physical Characteristics			
Housing Material	UL Approved glass-filled PBT		
Actuator Material	Stainless steel		
Mounting	2 x M4 front or 2 x M3 top		
Vibration	10…55 Hz		
Shock	11 ms @ 30 g		
Conduit Entry	3x break-outs		
Color	Red		

★ Usable for ISO 13849-1:2006 and IEC 62061. Data other than B10d is based on:
- Usage rate of 1op/10 mins., 24 hrs/day, 360 days/year, representing 51840 operations per year
- Mission time/Proof test interval of 38 years

‡ The safety contacts are described as normally closed (N.C.) i.e., with the guard closed, actuator in place (where relevant) and the machine able to be started.

Contact Action

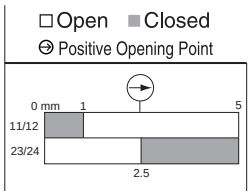

Wiring Diagrams

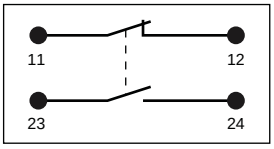

1 N.O. & 1 N.C.

Approximate Dimensions [mm (in.)]

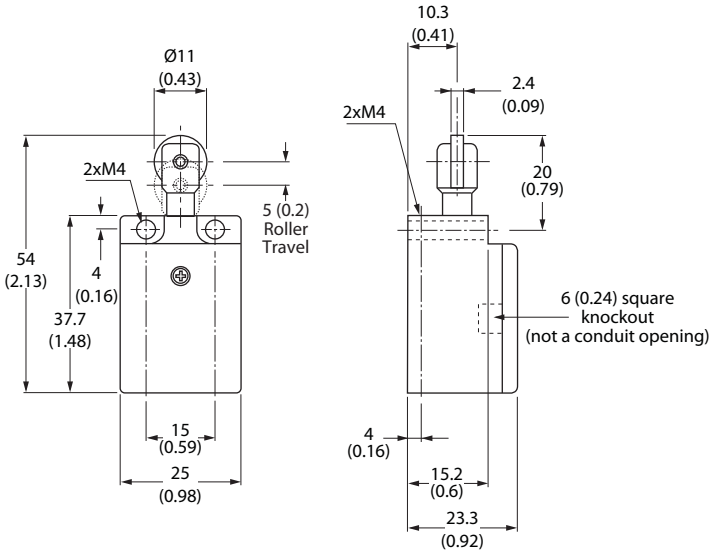

802K IEC Style Limit Switches

30 mm Metal General Purpose Switches

Specifications

Standards		IEC/EN60204-1, NFPA79, AS4024.1			
Certifications		cULus and CE Marked for all applicable directives			
Outputs					
Contacts		1 N.C. snap acting, 2 N.C. or 4 N.C. slow acting			
Auxiliary Contacts		1 N.O. (with 1 N.C.) or 2 N.O. (with 2 N.C.)			
Thermal Current (I_{Ith})		8 A			
Rated Insulation Voltage		600V AC			
Utilization Category		**Contact Specification**			
A600/AC-15	(Ue)	600V	500V	240V	120V
	(Ie)	1.2 A	1.4 A	3.0 A	6.0 A
N600/DC-13	(Ue)	600V	500V	250V	125V
	(Ie)	0.4 A	0.55 A	1.1 A	2.2 A
Operating Characteristics					
Actuation Speed, Max.		250 mm/s			
Actuation Speed, Min.		100 mm/min			
Actuation Frequency, Max.		6000 operations per hour			
Mechanical Life		1 x 10^7 operations with no electrical load			
Environmental					
Enclosure Type Rating		IP66			
Operating Temperature [C (F)]		-25…+65 ° (-13…+149 °)			
Pollution Degree★		3			
Physical Characteristics					
Housing Material		Die-cast alloy			
Actuator Material		Various polymers and metals			
Mounting		2 x M5, any position			
Vibration		IEC 68-2-6 (10…55 Hz, 0.35 amplitude)			
Shock		IEC 68-2-7 (30 Gn 3 pulses per axis)			
Conduit Entry		M20 or 1/2 inch NPT			
Color		Black			

★ Conductive pollution occurs, or dry, nonconductive pollution occurs which becomes conductive due to condensation.

Typical Wiring Diagrams

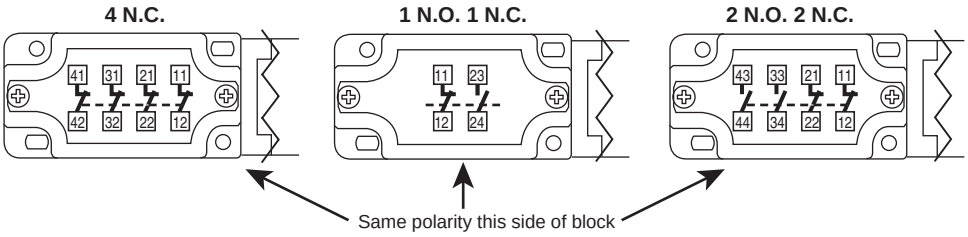

Approximate Dimensions [mm (in.)]

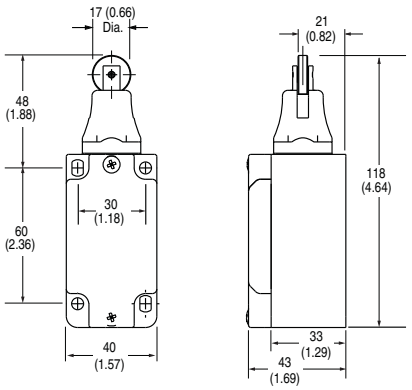

Roller Plunger

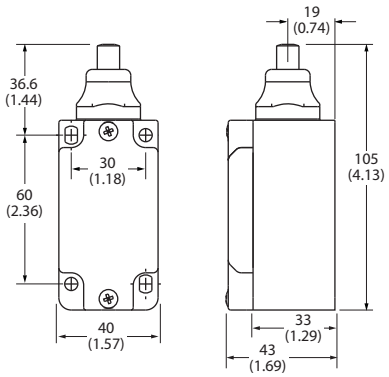

Dome Plunger

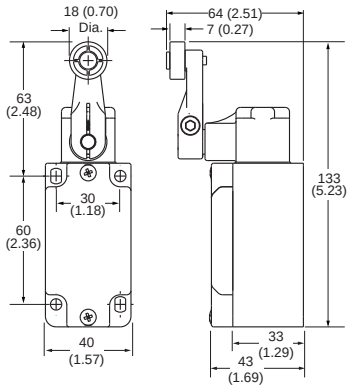

Short Lever
(Metal & Plastic Roller)

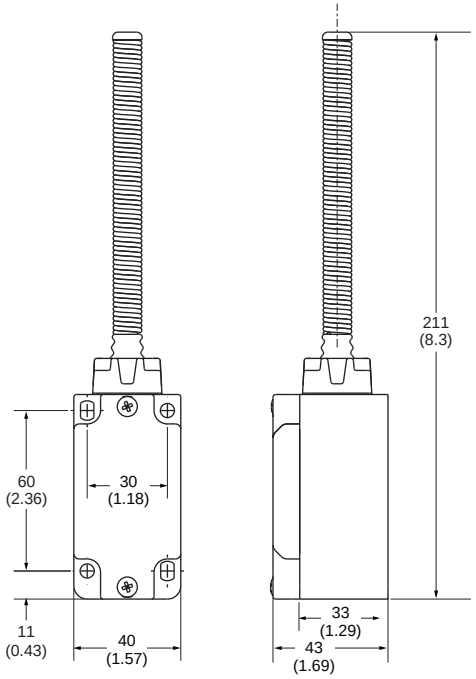

Spring Rod

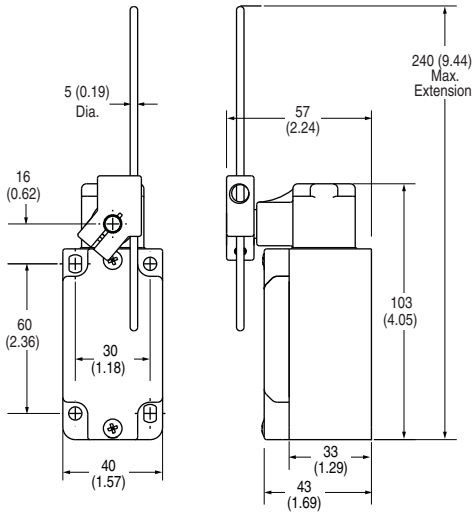

Rod Lever

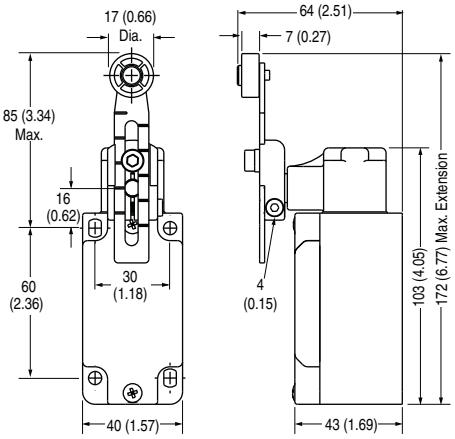

Adjustable Lever

Rockwell Automation maintains current product environmental information on its website at
http://www.rockwellautomation.com/rockwellautomation/about-us/sustainability-ethics/product-environmental-compliance.page

Allen-Bradley and Rockwell Automation are trademarks of Rockwell Automation, Inc. Trademarks not belonging to Rockwell Automation are property of their respective companies.

www.rockwellautomation.com

Power, Control and Information Solutions Headquarters

Americas: Rockwell Automation, 1201 South Second Street, Milwaukee, WI 53204-2496 USA, Tel: (1) 414.382.2000, Fax: (1) 414.382.4444
Europe/Middle East/Africa: Rockwell Automation NV, Pegasus Park, De Kleetlaan 12a, 1831 Diegem, Belgium, Tel: (32) 2 663 0600, Fax: (32) 2 663 0640
Asia Pacific: Rockwell Automation, Level 14, Core F, Cyberport 3, 100 Cyberport Road, Hong Kong, Tel: (852) 2887 4788, Fax: (852) 2508 1846

Publication LIMIT-TD001A-EN-P—September 2014

Copyright 2014 Rockwell Automation, Inc. All rights reserved.