Technical Data

Allen-Bradley

Hazardous Location Push Button Specifications

Bulletin Numbers 800G, 800H, and 800R

Topic	Page
Summary of Changes	2
Bulletin 800H Hazardous Location Push Buttons	
Specifications	4
Complete Assembled Stations	6
Momentary Contact Push Buttons Units	7
Push Pull Units	10
Selector Switch Units	13
Pilot Light Devices	16
Potentiometer Units	17
Ordering Information for Bulletin 800H Stations	17
Modifications and Accessories	22
Approximate Dimensions and Shipping Weights	30
Bulletin 800R Hazardous Location Push Buttons	
Specifications	37
Complete Assembled Stations	39
Custom-built Stations	40
Approximate Dimensions & Shipping Weights	41

Topic	Page
Bulletin 800G Hazardous Location Push Buttons	
Specifications — c-UL-us Models	43
Specifications — "-Ex" Models (ATEX/IECEx)	48
Assembled Stations	52
Push Button Units	55
Selector Switch Units	56
Pilot Lights	57
Plastic Enclosures (c-UL-us Models Only)	57
Back-of-panel Components	58
Accessories	59
Legend Plates	60
Approximate Dimensions	64

LISTEN. THINK. SOLVE.®

Allen-Bradley • Rockwell Software

Rockwell Automation

Allen Bradley 800H-JP5KA7TXXX | gesrepair.com

Summary of Changes

This publication contains new and updated information as indicated in the following table.

Topic	Page
Updated wire gauge in Table 2.	4
Updated the catalog number explanation for Assembled Stations.	52
Updated the catalog number explanation for Plastic Enclosures (c-UL-us Models Only).	57
Updated the Accessories table.	59

Bulletin 800H Hazardous Location Push Buttons

Our Bulletin 800H Type 7 and 9 Hazardous Location Push Buttons offer unmatched selection, excellent corrosion resistance, and choice of conduit seal-off solutions. You can order them as complete factory-assembled stations or as separate components with standard or long barrels.

Application

When properly mounted in a Type 7 and 9 enclosure, Bulletin 800H Type 7 and 9 operators are designed to meet the requirements of the National Electrical Code for Class I, Divisions 1 & 2, Groups B, C, and D Hazardous Gas; Class II, Divisions 1 & 2, Groups E, F, and G Hazardous Dust; and, Class III Hazardous Fiber Locations. In addition, the single-gang shallow base, catalog number 800H-IHZX7, meets Class I, Group B requirements. This Type 7 and 9 equipment is listed by Underwriters Laboratories, Inc.

Per National Electrical Code:

Zone	Description
1	In Class I, Zone 1 locations, all wiring methods that are permitted for Class I, Division 1 locations and Class I, Zone 0 or Zone 1 locations, including requirements for sealing, shall be permitted.
2	In Class I, Zone 2 locations, all wiring methods that are permitted for Class I, Division 2, Class I, Division 1 or Division 2, and Class I, Zone 0 or Zone 1 locations, including requirements for sealing, shall be permitted.

Operator Construction

The Allen-Bradley® line of hazardous location devices features copper-free (less than 0.4 of 1% copper content) die-cast aluminum bushings and mounting rings, type #316 stainless steel operating shafts and an O-ring seal for added corrosion resistance. These components mount into a threaded hole (3/4 in.-14 NPSM) in a suitable enclosure.

Bulletin 800H Type 7 and 9 components are available in two basic formats: standard barrel (Bulletin 800H) and long barrel (Bulletin 800HL). Standard barrel devices are suitable for mounting in panel thickness up to 25.4 mm (1 in.) thick. Long barrel devices are suitable for mounting in panel thickness greater than 25.4 mm (1 in.) and no thicker than 63.5 mm (2.5 in.). Both style operators offer a unique locking bracket, which provides an anti-turn feature to help prevent the operator from coming loose.

The mounting rings in front of the panel are knurled to provide a second way to tighten each unit into the panel.

Outdoor Use

Bulletin 800H Type 7 and 9 stations and enclosures are not configured for outdoor use as standard. A Type 3 rating is available, while maintaining Type 7 and 9 integrity of the enclosure, by the addition of a Type 3 sealing flange and an approved drain. The sealing flange that is shown in Figure 1 can be purchased as an option or as an accessory. A Type 4 rating can be achieved by using sealing nuts to seal the push button operators along with the sealing flange. Sealing nuts are available as accessories (see https://ab.rockwellautomation.com/Push-Buttons/Hazardous-Location/800H-Push-Buttons#selection).

Elimination of Conduit Seal Off Requirement

Bulletin 800H Type 7 and 9 units can be installed with various sealing options. By using a flanged sealing well, these stations can be installed without a conduit seal off in most applications (subject to applicable codes and laws). The sealing wells that are shown in Figure 1 can be purchased as an option or as an accessory. Sealing wells have an integral Type 3 flange seal for outdoor applications.

Sealed switch contact blocks are another way to help eliminate the need for conduit seal fittings in most applications (subject to applicable codes and laws). Sealed switch contact blocks can be purchased as an option on assembled stations by changing the Bulletin No. from 800H to 800R. Sealed switch contact blocks can be ordered as an accessory (see https://ab.rockwellautomation.com/Push-Buttons/Hazardous-Location/800H-Push-Buttons#selection). A push button station with a sealed switch contact block is shown in Figure 1.

Figure 1 - Sealing Options

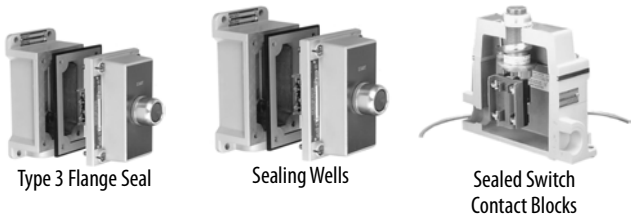

Specifications

ATTENTION: Performance data that is given in this publication is provided only as a guide for you to determine suitability and does not constitute a performance warranty of any kind. Such data may represent the results of accelerated testing at elevated stress levels, and you are responsible for correlating the data to actual application requirements. ALL WARRANTIES AS TO ACTUAL PERFORMANCE, WHETHER EXPRESS OR IMPLIED, ARE EXPRESSLY DISCLAIMED.

Table 1 - Electrical Ratings

Contact Ratings	See the contact ratings on page 5.
Dielectric Strength	2200V for 1 minute, 1300V for 1 minute (Logic Reed)
Electrical Design Lifecycles	1,000,000 at max rated load, 200,000 at max rated load (Logic Reed)

Table 2 - Mechanical Ratings

Vibration		10…2000 Hz 1.52 mm displacement (peak-to-peak) max/10 G max (except Logic Reed)
Shock		1/2 cycle sine-wave for 11 ms ≥ 25 G (contact fragility) and no damage at 100 G
Degree of Protection		Type 7 and 9 Explosion Proof (Type 3 and Type 4 ratings available with accessories)
Mechanical Design Lifecycles	Push Buttons	250,000 min
	Potentiometers	100,000 min
	All other devices	200,000 min
Contact Operation		Shallow and mini contact blocks: slow double make and break Logic Reed and sealed switch contact blocks: snap action
Wire Gauge/Terminal Screw Torque		#18…14 AWG/6…8 lb•in
Typical Operating Forces		
Operators without contact blocks:	Flush, extended, standard mushroom, jumbo mushroom	2.9 lb max
	Jumbo and extended aluminum mushroom head	3.95 lb max
	Maintained selector switch	4.0 in•lb max
Spring-return Selector Switches		5 in•lb to stop, 0.2 in•lb to return
Illuminated Push Buttons and Push-to-test Pilot Lights		5.6 lb max
2-position Push-Pull		9 lb max push or pull
3-position Push-Pull		12 lb max push to in position or pull to center position (15 lb max pull to out position)
Contact Blocks	800T-XA	1 lb
	Logic Reed	1 lb max
	Sealed Switch	3 lb max at 0.205 in. plunger travel
	Stackable Sealed Switch	1 lb max

Table 3 - Environmental

Temperature Range (1)	Operating	-20…+55 °C (-4…+13 °F)
	Storage	-40…+85 °C (-40…+185 °F)
Humidity		50% at 40 °C (104 °F)

(1) Operating temperatures below freezing are based on the absence of freezing moisture and liquids.

Standard Contact Ratings

Maximum thermal continuous current I_{th} 10 A AC/2.5 A DC. Table 4 shows the ratings for Bulletin 800H Type 7 & 9 units with catalog number 800T-XA contacts.

Table 4 - Standard Contact Ratings

Max Operational Volts U_e	Utilization Category		Rated Operational Currents		
	IEC	NEMA	Volts U_e	Make	Break
AC 600	AC-15	A600	120…600	7200VA	720VA
			72…120	60 A	720VA
			24…28 (1)	60 A	10 A
DC 600	DC-13	Q600	28…600	69VA	
			24…28 (1)	2.5 A	

(1) For applications below 24V and 24 mA, PenTUFF™, Logic Reed, or stackable sealed switch contacts are recommended.

Sealed Switch Contact Ratings

Maximum continuous current I_{th} 5 A.

Table 5 - Sealed Switch Contact Ratings

Max Operational Volts U_e	Utilization Category		Rated Operational Currents		
	IEC	NEMA	Volts U_e	Make	Break
AC 600	AC-15	B600	120…600	3600VA	360VA
			0…120	30 A	3 A
DC 300	DC-13	P300	24…300	138VA	
			0…28	5.0 A	

Stackable Sealed Switch Contact Ratings

Maximum continuous current I_{th} 3 A. Bulletin 800T units have control circuit ratings with sealed switch contact blocks as shown in Table 6.

Table 6 - Stackable Sealed Switch Contact Ratings

Max Operational Volts U_e	Utilization Category		Rated Operational Currents		
	IEC	NEMA	Volts U_e	Make	Break
AC 300	AC-15	C300	120…300	1800VA	180VA
			0…120	15 A	1.5 A
DC 150	DC-13	Q150	24…150	69VA	
			0…24	2.5 A	

Logic Reed Contact Ratings

Maximum: 150V AC, 0.15 A, 8VA and 30V DC, 0.06 A, 1.8VA.

Use only with resistive loads.

PenTUFF (Low Voltage) Contact Ratings

Minimum DC: 5V, 1 mA
Maximum thermal continuous current I_{th} 2.5 A AC/ 1.0 A DC.

Table 7 shows the ratings for Bulletin 800H units with catalog number 800T-XAV contacts.

Table 7 - PenTUFF™ (Low Voltage) Contact Ratings

Max Operational Volts U_e	Utilization Category		Rated Operational Currents		
	IEC	NEMA	Volts U_e	Make	Break
AC 300	AC-15	C300	120…300	1800VA	180VA
			0…120	15 A	1.5 A
DC 150	DC-13	R150	24…150	28VA	
			0…24	1.0 A	

Standards Compliance

- UL508
- UL698
- UL1203
- UL1604
- CSA C22.2 No. 14
- CSA C22.2 No. 25
- CSA C22.2 No. 30

Certifications

Enclosures:

- UL Listed (File No. E71673 Guide No. NNNY)
- CSA (File No. LR11924)

Devices:

- UL Listed (File No. E10314 Guide No. NOIV)
- CSA (File No. LR11924)

Complete Assembled Stations

IMPORTANT Supplied with 19.05 mm (3/4 in.) dead end conduit entry (Cat. No. 800H-1HZX7)

	Operator	Contact Symbol		Contact Action	Legend Marking	Lever Type Actuator Cat. No. (1) (2)	Component Type Buttons Cat. No. (2) (3)
Cat. No. 800H-1HA7	One Push Button		1 N.O. 1 N.C.	Momentary	STOP	800H-1HA7	800H-1HA7P
					START	800H-1HB7	800H-1HB7P
					JOG	800H-1HJ7	800H-1HJ7P
					No Legends	800H-1HX7	800H-1HX7P
Cat. No. 800H-2HA7P	Two Push Buttons		1 N.O. 1 N.C. Each Button	Momentary	START STOP	800H-2HA7	800H-2HA7P
					FOR REV	800H-2HB7	800H-2HB7P
					RAISE LOWER	800H-2HD7	800H-2HD7P
					OPEN CLOSE	800H-2HF7	800H-2HF7P
					No Legends	800H-2HX7	800H-2HX7P
Cat. No. 800H-2HAM7	2-position Selector Switch		1 N.O. 1 N.C.	Maintained	START STOP	800H-2HAM7	—
					ON OFF	800H-2HCM7	800H-R2HC7
					OPEN CLOSE	800H-2HGM7	800H-R2HG7
					RUN STOP	800H-2HJM7	—
					HAND AUTO	800H-2HLM7	800H-R2HA7
					No Legends	800H-2HXM7	800H-R2HX7
Cat. No. 800H-R3HA7	3-position Selector Switch	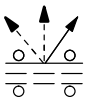	1 N.O. 1 N.C.	—	HAND OFF AUTO	—	800H-R3HA7
					No Legends	—	800H-R3HX7
Cat. No. 800H-2HAD10R7	One Pilot Light, Dual Push Buttons		120V AC/DC Full Volt./Red	—	START STOP	—	800H-2HAD10R7
			1 N.O. 1 N.C.		Marking other than listed - consult your local Allen-Bradley distributor	—	800H-2HXD10R7

(1) Operators have integral padlocking attachment.
(2) Supplied with standard shallow contact blocks. For stations with sealed switch contacts, change Bulletin number from 800H to 800R. A deep enclosure is required.
(3) STOP is extended red, START is flush green, all others are flush black.

Momentary Contact Push Buttons Units

Non-illuminated Momentary Contact Push Button Units

Flush Head Unit
Cat. No. 800H-AP1A

Extended Head Unit
Cat. No. 800H-BP6B

Mushroom Head Unit
Cat. No. 800H-DP6A

800	H	–	AP	1		A
	a		b	c	d	e

a	
Barrel Type	
Code	**Description**
H	Standard barrel
HL	Long barrel

b	
Operator Type	
Code	**Description**
AP	Flush head
BP	Extended head
DP	Mushroom head
DPX	Mushroom head (less color cap)

c	
Color Cap	
Code	**Description**
Blank	Used only when operator type Code DPX (Table b) is ordered
1	Green
2	Black
3	Orange
4	Gray
6	Red
7	Blue
9	Yellow

d	
Special Mushroom Head(1)	
Code	**Description**
Blank	No special head
J	Jumbo mushroom head — plastic
L	Jumbo mushroom head — metal

e	
Contact Blocks (2)	
Code	**Description**
Standard	
Blank	No contacts
D1	1 N.O.
D2	1 N.C.
D5	1 N.O. (Mini)
D6	1 N.C. (Mini)
A2	2 N.O.
A4	2 N.C.
A	1 N.O. - 1 N.C.
B	2 N.O. - 2 N.C.
H	3 N.O. - 3 N.C.
C	4 N.O. - 4 N.C.

e, continued	
Contact Blocks (2)	
Code	**Description**
PenTUFF™ (Low Voltage)	
D1V	1 N.O.
D2V	1 N.C.
AV	1 N.O. - 1 N.C.
BV	2 N.O. - 2 N.C.
HV	3 N.O. - 3 N.C.
CV	4 N.O. - 4 N.C.

(1) Special mushroom head options only apply to mushroom head operator type code DP (Table b).
(2) For sealed switch and Logic Reed contact blocks, consult your local Rockwell Automation sales office or Allen-Bradley distributor.

Dual Momentary Contact Push Button Units

800	H	–	DP	H	16	AAXX	64
	a		b	c	d	e	f

a	
Barrel Type	
Code	**Description**
H	Standard barrel
HL	Long barrel

b	
Operator Type	
Code	**Description**
DP	Dual push button

c	
Mounting	
Code	**Description**
H	Horizontal
B	Vertical

d	
Button Color	
Code	**Description**
1	Left green flush/right red extended
2	Left black flush/right black flush

e		
Contact Blocks (1)		
Code	**Contact Arrangement**	
	Left button (horizontal) Top button (vertical)	**Right button (horizontal) Bottom button (vertical)**
AAXX	1 N.O. - 1 N.C.	1 N.O. - 1 N.C.
AAAA	2 N.O. - 2 N.C.	2 N.O. - 2 N.C.

f		
Marking (1)		
Code	**Contact Arrangement**	
	Left button (horizontal) Top button (vertical)	**Right button (horizontal) Bottom button (vertical)**
Blank	No mark specified	No mark specified
64	START	STOP
50	ON	OFF
51	FORWARD	REVERSE
57	OPEN	CLOSE
66	UP	DOWN
99 (2)	Marking specified	Marking specified

(1) For sealed switch and Logic Reed contact blocks, consult your local Rockwell Automation sales office or Allen-Bradley distributor.
(2) To order with special marking, please specify; seven characters maximum per button, single line only.

Illuminated Momentary Contact Push Button Units

800	H	–	PPB	H	16	M	
	a		b	c	d	e	f

a	
Barrel Type	
Code	**Description**
H	Standard barrel
HL	Long barrel

b	
Power Module Type	
Code	**Description**
PPB	Transformer (or dual-input)
QPB	Full voltage/Universal

c	
Illumination Options	
Code	**Description**
Blank	Incandescent
B	LED (light-emitting diode)
Dual-input	
D	Diode type, incandescent (1)
T	Transformer — relay type, incandescent
TH	Transformer —relay type, LED

d	
Voltage	
Code	**Description**
Transformer	
16	120V AC, 50/60 Hz
26	240V AC, 50/60 Hz
46	480V AC, 50/60 Hz
56	600V AC, 50/60 Hz
Full Voltage — Incandescent	
24	24V AC/DC
10	120V AC/DC
20	240V AC/DC
Universal — LED	
2	12…130V AC/DC
Dual-input	
16	120V AC
24	24V AC/DC (4)

e	
Lens Color	
Code	**Description**
Blank	No lens, with standard contacts 1 N.O. - 1 N.C.
X	No lens is provided with any contacts ordered other than standard 1 N.O. - 1 N.C.
M	Multi-color (3)

f	
Contact Blocks (2)	
Code	**Description**
Standard	
Blank	1 N.O. - 1 N.C.
X	No contacts
D1	1 N.O.
D2	1 N.C.
A2	2 N.O.
A4	2 N.C.
PenTUFF (Low Voltage)	
D1V	1 N.O.
D2V	1 N.C.
AV	1 N.O. - 1 N.C.

(1) Diode type dual-input provides circuit isolation via opposing diodes. Not recommended for use with solid-state outputs and neon indicators.
(2) For sealed switch and Logic Reed contact blocks, consult your local Rockwell Automation sales office or Allen-Bradley distributor.
(3) Multi-color insert packet includes amber, blue, green, red, and white.
(4) Dual-input diode only.

Push Pull Units

2-position, Non-illuminated

2-position Push-Pull
Cat. No. 800H-FPX6A5

800	H	–	FPX		1	A1
	a		b	c	d	e

a	
Barrel Type	
Code	**Description**
H	Standard barrel
HL	Long barrel

b	
Operator Type	
Code	**Description**
FPX	Push-pull unit

c	
Head Type	
Code	**Description**
Blank	Mushroom head
J	Jumbo mushroom head (1)

d	
Color Cap	
Code	**Description**
Blank	No cap
1	Green
2	Black
4	Gray (silver)
6	Red
7	Blue
9	Yellow (gold)

e			
Contact Blocks			
Code	**Operator Position**		**Description**
	Out	**In**	
Standard			
Blank	—	—	No contacts
A1	0 X	X 0	1 N.O. - 1 N.C.L.B. (2)
A5	X X	0 0	2 N.C.L.B. (2)
D1	0	X	1 N.O.
D4	X	0	1 N.C.L.B. (2)
PenTUFF (Low Voltage)			
D1V	0	X	1 N.O.
AV	0 X	X 0	1 N.O. - 1 N.C.
Note: X = Closed/0 = Open			

(1) Not valid with color cap option code Blank (Table d)
(2) Normally closed late break contact. When button is pushed from the OUT to the IN position, the mechanical detent action of the operator occurs before electrical contacts change state. When the button is pulled from the IN to the OUT position, the electrical contacts change state before the mechanical detent occurs.

3-position, Non-illuminated

800	H	–	FPX		M	1	A7
	a		b	c	d	e	f

3-Position Push-Pull
Cat. No. 800H-FPXM6A7

a	
Barrel Type	
Code	**Description**
H	Standard barrel
HL	Long barrel

b	
Operator Type	
Code	**Description**
FPX	Push-pull unit

c	
Head Type	
Code	**Description**
Blank	Mushroom head
J	Jumbo mushroom head (1)

(1) Not valid with color cap option code Blank (Table e)

d			
Operator Function			
Code	**Operator Position**		
	Out	**Center**	**In**
M	Momentary	Maintained	Maintained
N	Momentary	Maintained	Momentary

e	
Color Cap	
Code	**Description**
Blank	No cap
1	Green
2	Black
4	Gray (silver)
6	Red
7	Blue
9	Yellow (gold)

f				
Contact Blocks				
Code	**Operator Position (1)**			**Description**
	Out	**Center**	**In**	
Standard				
Blank	—		—	No contacts
A	0 X	0 0	X 0	1 N.O. - 1 N.C.
A1	0 X	0 X	X 0	1 N.O. - 1 N.C.L.B.
A7	X X	0 X	0 0	1 N.C. - 1 N.C.L.B.
B6	X X	0 0	X 0	2 N.C. - 2 N.C.L.B.
PenTUFF (Low Voltage)				
AV	0 X	0 0	X 0	1 N.O. - 1 N.C.

(1) X = Closed/0 = Open

2- and 3-position, Illuminated

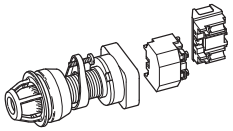

800	H	–	FPX		PH	16	M	A1
	a		b	c	d	e	f	g

a	
Barrel Type	
Code	**Description**
H	Standard barrel
HL	Long barrel

b	
Operator Type	
Code	**Description**
FPX	Push-pull unit

c	
Operator Function	
Code	**Description**
2-position	
Blank	Push-pull

c, continued			
Operator Function			
Code	**Operator Position**		
3-position			
	Out	**Center**	**In**
M	Momentary	Maintained	Maintained
N	Momentary	Maintained	Momentary

d	
Illumination Options	
Code	**Description**
Transformer	
P	Incandescent
PH	LED
Full Voltage	
Q	Incandescent
QH	Universal LED
Dual-input	
D	Dual-input — diode (3)
DT	Dual-input — transformer relay
DTH	Dual-input transformer — relay LED

e	
Voltage	
Code	**Description**
Transformer	
16	120V AC, 50/60 Hz
26	240V AC, 50/60 Hz
46	480V AC, 50/60 Hz
56	600V AC, 50/60 Hz
Full Voltage — Incandescent	
24	24V AC/DC
10	120V AC/DC
20	240V AC/DC
Universal — LED	
2	12…130V AC/DC
Dual-input	
16	120V AC
24	24V AC/DC (4)

f	
Color Cap	
Code	**Description**
Blank	No lens with no contacts
X	No lens with contacts
M	Multi-color (2)

g	
Contact Blocks	
Code	**Description**
Standard	
Blank	No contacts
D1	1 N.O.
D4	1 N.C.L.B. (1)
A	1 N.O. - 1 N.C.
A1	1 N.O. - 1 N.C.L.B. (1)
A2	2 N.O.
A5	2 N.C.L.B.
A7	1 N.C. - 1 N.C.L.B. (1)

g, continued	
Contact Blocks	
Code	**Description**
PenTUFF Low Voltage	
D1V	1 N.O.
D2V	1 N.C.
AV	1 N.O. - 1 N.C.
Logic Reed	
D1R	1 N.O.
D2R	1 N.C.
AR	1 N.O. - 1 N.C.
A2R	2 N.O.
A4R	2 N.C.

(1) Normally closed late break contact. When button is pushed from the OUT to the IN position, the mechanical detent action of the operator occurs before electrical contacts change state. When the button is pulled from the IN to the OUT position, the electrical contacts change state before the mechanical detent occurs.
(2) Multi-color insert packet includes amber, blue, green, red, and white.
(3) Diode type dual-input provides circuit isolation via opposing diodes. Not recommended for use with solid-state outputs and neon indicators.
(4) Dual-input diode only.

Table 8 - Target Selection

2-position (1)				3-position (1)			
g Code	Out	In	Contact Description	Out	Center	In	g Code
A, AV, R	O X	X O	N.O. N.C.	O X	O O	X O	A, AV, AR
A1	O X	X O	N.O. N.C.L.B.	O X	O X	X O	A1
A2	O X	O X	N.O. N.O.	— —	— —	— —	—
A5	X O	X O	N.C.L.B N.C.L.B.	— —	— —	— —	—
—	— —	— —	N.C. N.C.L.B.	X X	O X	O O	A7
D1, D1V, D1R	O	X	N.O.	—	—	—	—
D4	X	O	N.C.L.B.	—	—	—	—

(1) X = Closed/O = Open

Selector Switch Units

2-position, Non-illuminated

Standard Knob Operator
Cat. No. 800H-HP2KB6AXXX

Knob Lever Operator
Cat. No. 800H-HP17KB6AXXX

Metal Wing Lever Operator
Cat. No. 800H-HP11KBAXXX

800	**H**	**–**	**HP**	**A**	**2**	**KB6**	**AXXX**	**(Knob/Wing Lever)**
	a		b	c	d	e	f	
800	**H**	**–**	**HP**	**31**		**KB6**	**AXXX**	**(Cylinder Lock)**
	a		b	c_1	d_1	e	f	

a	
Barrel Type	
Code	**Description**
H	Standard barrel
HL	Long barrel

b	
Number of Positions	
Code	**Description**
HP	2-position

c	
Knob Insert Colors (1)	
Code	**Description**
Blank	White
X	Packet of colored inserts (2)
Metal Wing Lever Colors	
A	Red
Blank	Gray

c_1	
Key Removal Position	
Code	**Description**
Maintained	
31	Key removal — left
32	Key removal — right
33	Key removal — both
Spring Return from Left	
42	Key removal — right (3)
Spring Return from Right	
48	Key removal — left

d	
Operator Type and Function	
Code	**Description**
Standard Knob	
2	Maintained
4	Spring return from left (3)
5	Spring return from right
Knob Lever	
17	Maintained
18	Spring return from left (3)
19	Spring return from right
Metal Wing Lever	
11	Maintained
15	Spring return from left (3)
16	Spring return from right

(1) Each standard and knob lever operator is factory-assembled with a white insert. Other colors are available, factory-assembled, if ordered in quantities of 10 or more.
(2) One insert of each color (blue, green, orange, red, and yellow).
(3) Target tables are reversed.

d_1			
Optional Keys			
Code	**D Series Key No.**	**Code**	**D Series Key No.**
Blank	D018 (std. key)	15	T112
03	D020	16	T115
04	D025	17	T324
05	D335	18	T382
06	D429	19	T404
07	D461	20	T171
08	D111	21	T484
09	D587	22	T547
10	D682	23	T569
11	D713	24	T692
12	D900	25	T752
13	D992	26	T178
14	D118		

e	
Cam Options	
Code	**Description**
KB6	Cam for maintained operators
KL8	Cam for spring return operators

f			
Contact Blocks			
Code	**Contact Config.**	**2-position**(1)	
		↖	↗
Standard			
Blank	No contacts	—	—
DXXX	1 N.O.	O	X
EXXX	1 N.C.	X	O
MXXX	2 N.O.	O O	X X
NXXX	2 N.C.	X X	O O
AXXX	1 N.O. - 1 N.C.	O X	X O
AAXX	2 N.O. - 2 N.C.	O X O X	X O X O

f, continued			
Contact Blocks			
Code	**Contact Config.**	**2-position**	
		↖	↗
PenTUFF™ (Low Voltage)			
HXXX	1 N.O.	O	X
UXXX	1 N.C.	X	O
FXXX	1 N.O.- 1 N.C.	O X	X O
FFXX	2 N.O. - 2 N.C.	O X O X	X O X O

(1) X = Closed/O = Open

3-position, Non-illuminated

Standard Knob Operator
Cat. No. 800H-JP2KB7AXXX

Knob Lever Operator
Cat. No. 800H-JP17KB7AXXX

Metal Wing Lever Operator
Cat. No. 800H-JP11KB7AXXX

800	**H**	**–**	**JP**		**2**	**KB7**	**AAXX**	**(Knob/Wing Lever)**
	a		b	c	d	e	f	
800	**H**	**–**	**JP**	**41**		**KB7**	**AAXX**	**(Cylinder Lock)**
	a		b	c_1	d_1	e	f	

a	
Barrel Type	
Code	**Description**
H	Standard barrel
HL	Long barrel

b	
Number of Positions	
Code	**Description**
JP	3-position

c	
Knob Insert Colors (1)	
Code	**Description**
Blank	White knob insert or cylinder lock operator
X	Packet of colored inserts (2)
Metal Wing Lever Colors	
A	Red
Blank	Gray

(1) Each standard and knob lever operator is factory-assembled with a white insert. Other colors are available, factory-assembled, if ordered in quantities of 10 or more.
(2) One insert of each color (blue, green, orange, red, and yellow).

c_1	
Cylinder Lock Operator Locking Position	
Code	**Description**
Maintained Position	
41	Left
42	Center
43	Right
44	All
45	Left and center
46	Right and left
47	Right and center
Spring Return from Left	
50	Center
52	Right
51	Right and center
Spring Return from Right	
69	Left
38	Center
73	Left and center
Spring Return from Both	
631	Center

d	
Operator Type and Function	
Code	**Description**
Standard Knob	
2	Maintained
4	Spring return from left
5	Spring return from right
91	Spring return from both
Knob Lever	
17	Maintained
18	Spring return from left
19	Spring return from right
20	Spring return from both
Metal Wing Lever (1)	
11	Maintained
15	Spring return from left
16	Spring return from right
141	Spring return from both

(1) Wing levers are not suitable with **KE7** cam code (Table 9).

d_1	
Operator Type and Function	
Code	**Key Number (1)**
Blank	D018 (standard key)

(1) See page 13 for additional key codes.

e	
Cam Options (1)	
Code	**Description**
KB7	Standard cam KB7
KA1	Cam KA1
KA7	Cam KA7

(1) For more cam descriptions, see Table 9.

f	
Contact Blocks	
Code	**Description**
Blank	No contacts
AXXX	Two contact targets for a given cam as shown in the W (white side) column of Table 9.
AAXX	Two contact targets for a given cam as shown in the W (white side) column of Table 9 and 2 contact targets for the same cam as shown in the B (black side) column of Table 9. (One Cat. No. 800T-XA contact block per side. Two contact blocks total.)

Table 9 - Cam and Contact Block Functionality Table

Contact Block Suffix Code	Contact Block Side	Circuits	Cam Codes (1)																																							
			KB7 (Std.)			**KA1**			**KA7**			**KC1**			**KC7**			**KD7**			**KE7**			**KQ1**			**KQ7**			**KR1**			**KR7**			**KT1**			**KT7**			**KU7**		
A_, B_, H_, C_	White	A	X	0	0	X	0	0	0	0	X	0	0	X	X	0	0	0	0	X	X	0	0	X	0	X	X	0	X	X	0	X	X	0	X	0	0	X	X	0	0	X	0	0
		B	0	0	X	0	X	0	0	X	0	0	X	0	0	X	0	0	X	0	0	X	X	0	X	0	0	X	0	0	X	0	0	X	0	X	0	0	0	0	X	0	X	0
B_, H_, C_	Black	A	X	0	0	X	0	0	0	0	X	0	0	X	X	0	0	X	0	0	0	0	X	0	0	X	X	0	0	0	0	X	X	0	0	0	0	X	X	0	0	0	0	X
		B	0	0	X	0	X	0	0	X	0	X	0	0	0	0	X	0	X	0	X	X	0	0	X	0	0	X	0	X	X	0	0	X	X	X	X	0	0	X	X	X	X	0
H_, C_	White	A	X	0	0	X	0	0	0	0	X	0	0	X	X	0	0	0	0	X	X	0	0	X	0	X	X	0	X	X	0	X	X	0	X	0	0	X	X	0	0	X	0	0
		B	0	0	X	0	X	0	0	X	0	0	X	0	0	X	0	0	X	0	0	X	X	0	X	0	0	X	0	0	X	0	0	X	0	X	0	0	0	0	X	0	X	0
C_	Black	A	X	0	0	X	0	0	0	0	X	0	0	X	X	0	0	X	0	0	0	0	X	0	0	X	X	0	0	0	0	X	X	0	0	0	0	X	X	0	0	0	0	X
		B	0	0	X	0	X	0	0	X	0	X	0	0	0	0	X	0	X	0	X	X	0	0	X	0	0	X	0	X	X	0	0	X	X	X	X	0	0	X	X	X	X	0

(1) X = Closed, 0 = Open

4-position, Non-illuminated

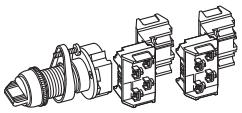

800	H	–	NP		2	KF4	AAXX	(Knob/Wing Lever)
	a		b	c	d	e	f	
800	H	–	NP	31		KF4	AXXX	(Cylinder Lock)
	a		b	c_1	d_1	e	f	

a	
Barrel Type	
Code	**Description**
H	Standard barrel
HL	Long barrel

b	
Number of Positions	
Code	**Description**
NP	4-position

c	
Knob Insert Colors (1)	
Code	**Description**
Blank	White
X	Packet of colored inserts (2)
Metal Wing Lever Colors	
A	Red
Blank	Gray

(1) Each standard and knob lever operator is factory-assembled with a white insert. Other colors are available, factory-assembled, if ordered in quantities of 10 or more.
(2) One insert of each color (blue, green, orange, red, and yellow).

c_1	
Key Removal Position and Operator Function	
Code	**Description**
Maintained	
31	Key removal position 1
32	Key removal position 2
33	Key removal position 3
34	Key removal position 4
61	Key removal all positions
Spring Return from Position 1 to 2	
132	Key removal position 2
133	Key removal position 3
134	Key removal position 4
154	Key removal positions 2, 3, and 4
Spring Return from Position 4 to 3	
231	Key removal position 1
232	Key removal position 2
233	Key removal position 3
251	Key removal positions 1, 2, and 3

d	
Operator Type and Function	
Code	**Description**
Standard Knob	
2	Maintained
3	Spring return position 1 to 2
9	Spring return from position 4 to 3
Knob Lever	
17	Maintained
29	Spring return from position 1 to 2
30	Spring return from position 4 to 3
Metal Wing Lever	
11	Maintained
13	Spring return from position 1 to 2
14	Spring return from position 4 to 3

d_1	
Optional D-Series Keys (1)	
Code	**Description**
Blank	D018 (standard key)

(1) Devices are supplied with two keys. Replacement part number for standard D018 key is X-181170.

e	
Cam Options	
Code	**Description**
KF4	F cam (standard)
KG4	G cam
KK4	K cam
KM4	M cam
KP4	P cam
KH4	Overlapping cam

f	
Contact Blocks	
Code	**Description**
Blank	No contacts
AAXX	Two contact targets for a given cam as shown in the W (white side) column of Table 10 and two contact targets for the same cam as shown in the B (black side) column of Table 10. (One Cat. No. 800T-XA contact block per side. Two contact blocks total)
AAAA	Four contact targets for a given cam as shown in the W (white side) column of Table 10 and four contact targets for the same cam as shown in the B (black side) column of Table 10. (Two Cat. No. 800T-XA contact blocks per side. Four contact blocks total.)

Table 10 - Selector Switch Cam Targets

Contact Block Suffix Code		Contact Block Side	Circuits	Cam Codes (1)																							
				KF4				KG4				KK4 (2)				KM4 (2)				KP4				KN4 (3)			
↑ AAAA FFFF ↓	↑ AAAA FFFF ↓	White	A	X	0	0	0	X	X	0	0	0	0	X	X	X	0	0	0	0	0	0	X	0	X	0	0
			B	0	X	0	0	0	0	X	0	X	X	0	0	0	X	X	0	0	X	0	0	0	0	0	X
		Black	A	0	0	0	X	X	0	0	0	X	0	0	X	0	0	0	X	0	0	X	X	0	0	X	0
			B	0	0	X	0	0	0	0	X	0	X	X	0	0	X	0	0	X	0	0	0	X	0	0	0
		White	A	X	0	0	0	X	X	0	0	0	0	X	X	X	0	0	0	0	0	0	X	0	X	0	0
			B	0	X	0	0	0	0	X	0	X	X	0	0	0	X	X	0	0	X	0	0	0	0	0	X
		Black	A	0	0	0	X	X	0	0	0	X	0	0	X	0	0	0	X	0	0	X	X	0	0	X	0
			B	0	0	X	0	0	0	0	X	0	X	X	0	0	X	0	0	X	0	0	0	X	0	0	0

(1) X = Closed, 0 = Open For additional targets and overlapping cams, see Publication 800T-2.8.
(2) Not available with wing lever operator.
(3) Overlapping cam.

Pilot Light Devices

Transformer Type Pilot Light
Cat. No. 800H-PP16M

Push-to-test Pilot Light
Cat. No. 800H-PPT16M

Pigtail Pilot Light
Cat. No. 800H-LP24M

800	H	–	PP	T		16	M
	a		b	c	d	e	f

a	
Barrel Type	
Code	**Description**
H	Standard barrel
HL	Long barrel

b	
Power Module Type	
Code	**Description**
PP	Transformer (or dual-input)
QP	Full voltage/Universal
LP	Pigtail — full voltage (1)
LPK	Pigtail — full voltage (1) (for dual push buttons)

c	
Lamp Test Options	
Code	**Description**
Blank	No test option
T	Push-to-test
D	Dual-input — diode (2)
DT	Dual-input — transformer relay (2)

d	
Illumination Option	
Code	**Description**
Blank	Incandescent
H	LED (3)

e	
Voltage	
Code	**Description**
Transformer	
16	120V AC, 50/60 Hz
26	240V AC, 50/60 Hz
46	480V AC, 50/60 Hz
56	600V AC, 50/60 Hz
Full Voltage — Incandescent	
24	24V AC/DC
10	120V AC/DC
20	240V AC/DC

e, continued	
Voltage	
Code	**Description**
Universal — LED	
2	12…130V AC/DC
Dual-input	
16	120V AC
24	24V AC/DC (5)
Pigtail	
24	24V AC/DC
10	120V AC/DC
20	240V AC/DC

f	
Lens Color	
Code	**Description**
Blank	No lens with no contacts
M	Multi-color (4)

(1) Lamp test option is not available with pigtail.
(2) Only available with power module type code PP (Table b).
(3) LED illumination option is not available with diode-type dual-input lamp test options.
(4) Multi-color insert packet includes amber, blue, green, red, and white.
(5) Dual-input diode only.

Typical Pilot Light Wiring Diagrams

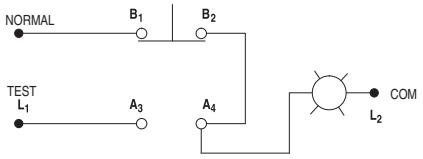

Push-to-test Pilot Light Device

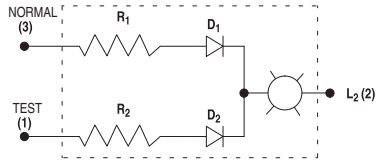

Dual-input Diode Pilot Device

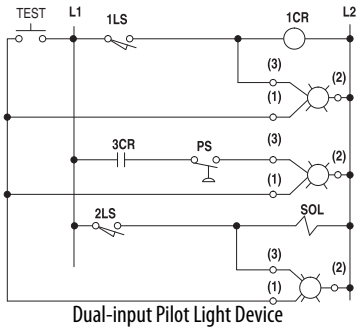

Dual-input Pilot Light Device

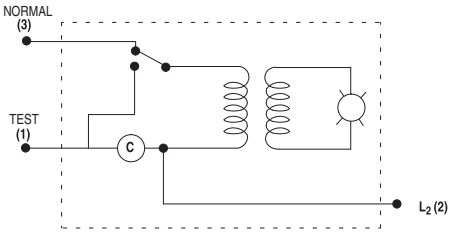

Dual-input Pilot Light Transformer Type Device

IMPORTANT See applicable codes and laws.

Potentiometer Units

- Single-turn operation with 312° rotation.
- Rated for 300V AC/DC, 2 W max.

Potentiometer Units
Cat. No. 800H-UP24

800	H	–	UP	13
	a		b	c

a	
Barrel Type	
Code	**Description**
H	Standard barrel
HL	Long barrel

b	
Resistance (1)	
Code	**Description**
13	1 Ω
19	2.5 Ω
24	5 Ω
29	10 Ω

(1) For operator only (no resistive element), order catalog number 800H-NP37 which is for use with Type J potentiometers having a shaft length of 7/8 in. (22.2 mm) and a shaft diameter of 1/4 in. (6.3 mm).

Ordering Information for Bulletin 800H Stations

Bulletin 800H Type 7 and 9 stations are available as factory assembled or as components for field assembly.

Factory-assembled Stations

Bulletin 800H Type 7 and 9 control stations are designed to meet the requirements of the National Electrical Code. These stations are listed by Underwriters Laboratories, Inc. for Class I, Divisions 1 & 2, Groups C & D Hazardous Gases or Vapors, Class II, Divisions 1 & 2, Groups E, F & G Hazardous Dust and Class III Hazardous Fiber Locations. In addition, the single gang shallow base, Cat. No. 800H-IHZX7, meets Class I, Group B requirements as defined in the National Electrical Code.

Factory-assembled stations can be ordered in following ways:

- Standard, factory-assembled stations listed on page 6.
- Custom, factory-assembled stations can be ordered by following the instructions that are listed on this page.

Components for Field Assembled Stations

Eight-gang maximum. These 2- and 3-gang modules can be assembled into the multi-gang stations by installing a coupler kit between the enclosures. These separate bases, covers, or bases with covers are Underwriters Laboratories, Inc. listed when properly assembled. These enclosures meet the requirements of Class I, Division 1 & 2, Groups C & D, Class II, Divisions 1 & 2, Groups E, F & G, and Class III hazardous locations as defined in the National Electrical Code. Bulletin 800H Type 7 and 9 components are designed for these modular enclosures and are UL Listed for this purpose.

IMPORTANT Components may be assembled as multi-gang units up to an eight-gang maximum. (1)

(1) Flange width is designed to comply with Underwriters Laboratories standards to enclosures with an internal free volume of up to 300 cubic inches (a maximum 8-gang assembly).

Instructions for Ordering Custom-built Stations

To select components for field assembly, follow these instructions:

1. Select operators required from page 6. (If lever type, select covers from page 19 and go to step 3).
2. Select covers based on mounting requirements on page 19.
3. Select an assembled base from page 20 in accordance with the number of covers selected in step 2.
4. Select legend plates from page 28 (and accessories, if required, from page 22.
5. If a particular sequence of operators or mounting orientation (vertical versus horizontal) is required, include a rough sketch.

Station Design Guidelines

IMPORTANT See applicable codes and standards.

1. Push-to-test pilot lights, illuminated push buttons, push-to-pull units, 4-position selector switches, and all operators with two contact blocks that are fastened along side one another or with a power module and contact block along side one another must be installed in a single-hole cover. Illuminated operators that use the Universal LED module must be installed in a single-hole cover as well.
2. Dual push button units can only be installed in a single-hole cover or the specially designed two-hole cover (catalog number 800H-NP33), which can accommodate the dual push button and the special pigtail pilot light (catalog number 800H-LPK10R).
3. When two components are installed in one cover, contact blocks are restricted to one side of the operator. Contact blocks of each operator must face each other.
4. One level of contact blocks is the maximum in a shallow base or deep base when used with a sealing well. Contact blocks, except sealed switch type, can be mounted two deep in other bases.
5. If sealed switch contact blocks or a sealing well are used, a deep enclosure is required.
6. Push buttons/pilot lights:
   a. START push buttons must be green or black flush, installed to the left or above STOP push buttons.
   b. EMERGENCY STOP push buttons must be a red mushroom.
   c. STOP push buttons must be red extended, installed to the right or below START push button.
   d. STOP push buttons must be installed in the last position (bottom or right) of each unit when required.
   e. Pilot lights must be installed in the first position (top or left side) of each unit when required.

Design Guideline #1

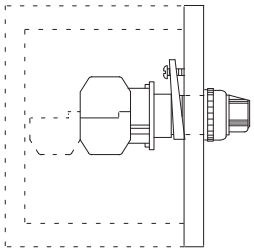

Push-to-test pilot lights, illuminated push buttons, push-pull units, 4-position selector switches, all operators with two contact blocks that are fastened along side one another or with a power module and contact block along side one another must be installed in a single-hole cover. Illuminated operators that use the Universal LED module must be installed in a single-hole cover as well.

Design Guideline #2

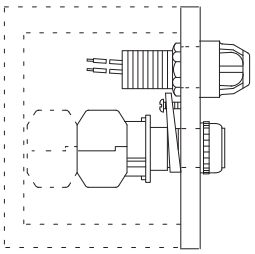

Dual push button units can only be installed in a single-hole cover or the specially designed two-hole cover (catalog number 800H-NP33), which can accommodate the dual push button and the special pigtail pilot light (catalog number 800H-LPK10R).

Design Guideline #3

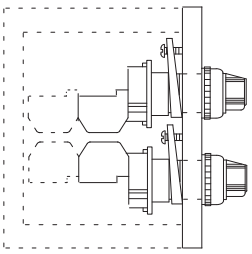

When two components are installed in one cover, contact blocks are restricted to one side of the operator. Contact blocks of each operator must face each other.

Design Guideline #4

One level of contact blocks is the maximum in a shallow base or deep base when used with a sealing well. Contact blocks, except sealed switch type, can be mounted two deep in other bases.

Covers and Bases

The following covers and bases are available for your Bulletin 800H station.

Covers, Lever Type Actuator

IMPORTANT Lever type covers are furnished without contact blocks. Legend plate for half lever is STOP; full lever momentary and maintained is a START-STOP. To order without legend plate, add suffix X to the cat. no.

	Description	Cat. No.
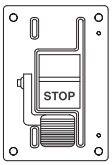	Half lever	800H-NP14
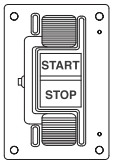	Double lever, momentary	800H-NP15
	Double lever, maintained	800H-NP16
	Double lever, momentary/ maintained (1)	800H-NP34

(1) A normally open circuit configuration is recommended for use behind this momentary lever and a late break normally closed circuit configuration is required for use behind the maintained lever to achieve proper functioning of the device.

Covers, Component Type Button

	Description	Cat. No.
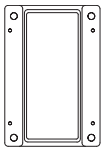	Blank	800H-NP32
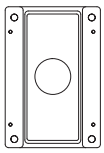	One-hole (1)	800H-NP30
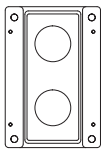	Two-hole (2)	800H-NP31
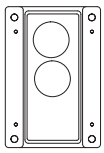	Two-hole special (3)	800H-NP33

(1) One-hole covers use a jumbo legend plate only.
(2) Two-hole covers use a standard legend plate only.
(3) This special two-hole cover can accommodate the pigtail pilot light (Bulletin 800H-LPK10 series), the dual push button or any non-illuminated unit. Legend plates (Cat. No. 800H-Y140J green and red split-field) and (Cat. No. 800H-Y141J gray full field), are the only legend plates suitable for use with this cover.

Assembled Bases (for Field Assembly and Custom Stations)

- Enclosure Covers — See enclosure cover tables for a complete listing of covers for these bases.
- Special Conduit Entries — For conduit entries not listed, consult your local Rockwell Automation sales office or Allen-Bradley distributor.

	Description	Conduit Entry	Cat. No.
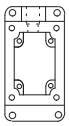	1-gang shallow (1)	3/4 in. dead end	800H-1HZX7
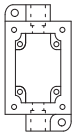	1-gang deep (2)	3/4 in. dead end	800H-1HVX7
		3/4 in. feed through	800H-1HVX7M1
		1 in. dead end	800H-1HVX7M2
		1 in. feed through	800H-1HVX7M3
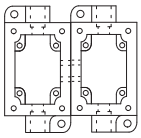	2-gang horizontal (2)	1 in. dead end	800H-2HHX7

(1) Shallow base cannot accommodate sealing well, sealed switched contact blocks, or stacked contact blocks. Shallow base rated for Group B.

(2) Deep base can accommodate sealing well, sealed switch contact blocks, or up to 2 deep standard contact blocks.

	Description	Conduit Entry	Cat. No.
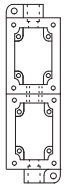	2-gang vertical (1)	1 in. feed through	800H-2HYX7
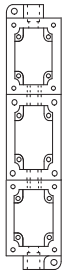	3-gang vertical (1)		800H-3HYX7
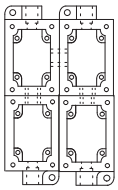	4-gang (1)		800H-4HVX7

(1) Deep base can accommodate sealing well, sealed switch contact blocks, or up to 2 deep standard contact blocks.

	Description	Conduit Entry	Cat. No.
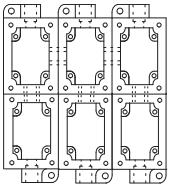	6-gang(1)	1 in. feed through	800H-6HVX7
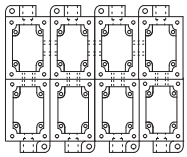	8-gang (1)		800H-8HVX7

(1) Deep base can accommodate sealing well, sealed switch contact blocks, or up to 2 deep standard contact blocks.

Bases for Multi-gang Stations

	Conduit Size	Cat. No.
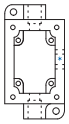	3/4 in. feed through	800H-NP40C
	1 in. feed through	800H-NP40D
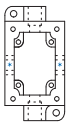	3/4 in. feed through	800H-NP41C
	1 in. feed through	800H-NP41D
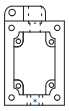	3/4 in. dead end	800H-NP42A
	1 in. dead end	800H-NP42B
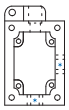	3/4 in. dead end	800H-NP43A
	1 in. dead end	800H-NP43B
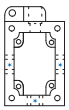	3/4 in. dead end	800H-NP44A
	1 in. dead end	800H-NP44B
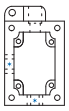	3/4 in. dead end	800H-NP46A
	1 in. dead end	800H-NP46B
	None	800H-NP45

Example

7-gang base with 1-in. through-feed conduit consists of the following:

Cat No.	Quantity
800H-NP42B	3
800H-NP43B	1
800H-NP44B	1
800H-NP45	1
800H-NP46B	1
800H-NP7	6

Plus up to four 1-in. plugs (catalog number 800H-NP11) to close unused conduit openings.

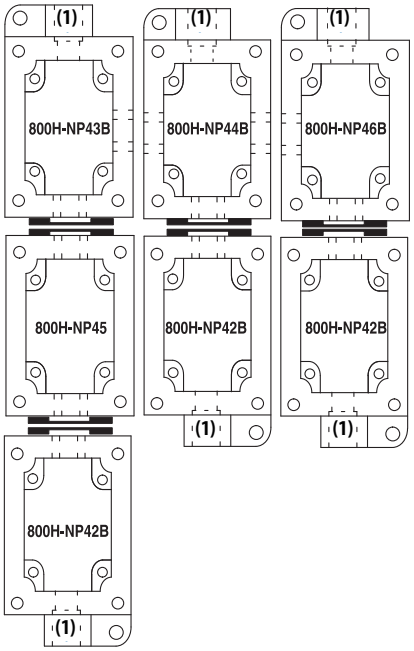

(1) 1-in. conduit through-feed (all gangs).

WARNING: Do not assemble more than eight enclosure gangs together, to avoid exceeding the internal volume for which the flame path of these enclosures is designed.

Modifications and Accessories

Contact Blocks

Packaged in kit form for field installation. All necessary mounting hardware is provided with each contact block kit. Contact ratings are listed on page 5.

IMPORTANT It is not recommended to mount more than four contact blocks on any one unit (maximum two blocks deep). Sealed switch contact blocks are limited to two blocks per unit maximum.

	Shallow Block	Mini Block	PenTUFF (Low Voltage) Block
Contact Type	**Cat. No. (1) (2) (3)**	**Cat. No. (1) (3)**	**Cat. No. (1) (2) (3)**
1 N.O.	800T-XD1	800T-XD5	800T-XD1V
1 N.C.	800T-XD2	800T-XD6	800T-XD2V
1 N.O.E.M.	800T-XD3	—	800T-XD3V
1 N.C.L.B.	800T-XD4	—	800T-XD4V
1 N.O. - N.C.	800T-XA	—	800T-XAV
2 N.O.	800T-XA2	—	—
2 N.C.	800T-XA4	—	—
1 N.C.L.B. - 1 N.O.	800T-XA1	—	—
1 N.C.L.B. - 1 N.C.	800T-XA7	—	—

(1) To determine if a conduit seal-off is necessary, see Table 18 on page 26 for sealing well information.
(2) Specify Bulletin 800TC for finger-safe contact blocks. Example: Cat. No. 800TC-XA.
(3) Contact blocks with normally closed contacts meet direct drive positive opening standard requirements.

	Logic Reed Block	Sealed Switch Block	Stackable Sealed Switch Block
Contact Type	**Cat. No. (1)**	**Cat. No. (1)**	**Cat. No. (1)**
1 N.O.	800T-XD1R	800T-XD1P	800T-XD1Y
1 N.C.	800T-XD2R	800T-XD2P	800T-XD2Y
1 N.O. - 1 N.C.	800T-XAR	800T-XAP	800T-XAY
2 N.O.	800T-XA2R	—	800T-XA2Y
2 N.C.	800T-XA4R	—	800T-XA4Y

(1) To determine if a conduit seal-off is necessary, see Table 18 on page 26 for sealing well information.

Replacement Color Caps

Table 11 - Illuminated

	Pilot Light	Push-to-test Pilot Light	Illuminated Push Button	Illuminated Push-Pull
Color	**Cat. No.**	**Cat. No.**	**Cat. No.**	**Cat. No.**
Multi-color kit	800H-N104M	800H-N105M	800H-N106M	800H-NP50M

Table 12 - Non-illuminated

	Momentary Mushroom — Standard (Plastic)	Momentary Mushroom — Jumbo (Metal)	Push-pull Standard (Metal)	Push-pull Jumbo (Metal)
Color	**Cat. No.**	**Cat. No.** (1)	**Cat. No.**	**Cat. No.**
Red	800T-N246R	800T-N248R	800H-NP51A	800H-NP52A
Green	800T-N246G	800T-N248G	800H-NP51B	800H-NP52B
Blue	800T-N246BL	800T-N248BL	800H-NP51C	800H-NP52C
Yellow	800T-N246Y	800T-N248Y	800H-NP51E	800H-NP52E
Black	800T-N246B	800T-N248B	800H-NP51H	800H-NP52H
Gray	800T-N246GR	800T-N248GR	800H-NP51G	—
Natural	—	800T-N248	—	—

(1) To order plastic jumbo mushroom caps, replace 248 with 247. Plastic not available in natural color. Example: Cat. No. 800T-N248R becomes Cat. No. 800T-N247R.

Replacement Knobs and Dual Push Button Assembly

	Standard Knob	Knob Lever	Wing Lever	Dual Push Button
Color	**Cat. No.**	**Cat. No.**	**Cat. No.** (2)	**Cat. No.**
White	800H-N130F	800H-N131F	—	—
Kit (Complete) (1)	800H-N130	800H-N131	—	—
Gray	—	—	800H-N138	—
Red	—	—	800H-N138A	—
Green Red	—	—	—	800H-NP39

(1) Kit includes knob and packet of inserts (Cat. No. 800T-N123). See Table 18 on page 26 for color insert kits.
(2) Standard finish is gray.

Boots—Non-illuminated Momentary Contact Push Buttons Units

IMPORTANT For Bulletin 800H/HL Type 7 and 9 operators, order one adapter and one boot per operator.

Boots supplied with control stations and components are made of a chlorosulfonated polyethylene material with stainless steel insert ring. To order boots with silicone, urethane, or ethylene propylene material, see the following table. Material application information is shown.

IMPORTANT Can be added to flush or extended head push button units to help protect against foreign materials reaching the opening between the push button and the locking ring.

Table 13 - Boots

		Material			
		Chlorosulfonated Polyethylene (2)	Silicone • (2)	Urethane •• (2)	Ethylene • Propylene •• (2)
Insert Material	Boot Color	Cat. No.	Cat. No.	Cat. No.	Cat. No.
Stainless steel (1)	Red	800H-N5A	800H-N101R	800H-N100R	800H-N103R
	Green	800H-N5B	800H-N101G	800H-N100G	800H-N103G
	Black	800H-N5H	800H-N101B	800H-N100B	800H-N103B
	Yellow	800H-N5E	800H-N101Y	800H-N100Y	—
	Blue	800H-N5C	800H-N101BL	800H-N100BL	—

(1) Series B boots incorporate a stainless steel insert as standard.
(2) Dots printed on the inside of the boot identify the boot material.

Table 14 - Booted Knobs

		Material			
		Chlorosulfonated Polyethylene (2)	Silicone • (2)	Urethane •• (2)	Ethylene • Propylene •• (2)
	Switch Type	Cat. No.	Cat. No.	Cat. No.	Cat. No.
	Standard knob selector switch (1)	800H-NP5	800H-NP101	800H-NP100	800H-NP103
	Knob lever selector switch (1)	800H-NPE5	800H-NPE101	800H-NPE100	800H-NPE103

(1) Includes color insert kit.
(2) Dots printed on the inside of the boot identify the boot material.

Table 15 - Adapters

Push Button Type	Cat. No.
Flush head	800H-NPAF
Extended head	800H-NPAE

Push Button Guards and Mushroom Push Button Guards

	Description	Cat. No.
	Push buttons, pilot lights, and push-to-test	800H-NP19
	Extra long guard (1 in.) for push button	800H-NP13
	Mushroom	800H-NP9
	Jumbo mushroom	800H-NP12

Protective Rings for Push-pull Operators

Protective ring for Bulletin 800H 2-position non-illuminated push-pull operators. Often used to avoid unintentional tripping of E-stop operators. Available for standard (40 mm) or jumbo (60 mm) push buttons.

	Description	Cat. No.
	For standard-size button	800H-NP40
	For jumbo size button	800H-NP40J

General Accessories

Table 16 - Plugs

	Description		Cat. No.
	Coupler Used for both horizontal and vertical assembly.		800H-NP7
	Description	**Type**	**Cat. No.**
	Closing Plug Whenever an enclosure with more than the required number of openings is used, this plug can be used to close the unused openings. Includes synthetic O-ring washer.	For cover hole	800H-NP1
		For base coupler Hole	800H-NP3
	Description	**Size**	**Cat. No.**
	Conduit Entry Plug This plug can be used to plug unused conduit openings in Type 7 and 9 bases.	3/4 in.	800H-NP10
		1 in.	800H-NP11

Table 17 - Locking Attachments

	Description	Cat. No. [2]
	Push Button Padlocking Attachments This device permits locking in the depressed position on extended head push button units only.	800H-NP2
	Dual Push Button Extended Head Padlocking Attachments This device permits locking for dual push button — extended head units only.	800H-NP17
	Padlocking Cover [1] Padlocking cover is used for Type 7 and 9 selector switches, non-illuminated push buttons (except mushrooms), and non-illuminated 2-position push-pull units, but not for potentiometer units.	800H-NP4

(1) Push-pull units only lock in the depressed position. Padlocking cover includes blank legend plate for customer marking. A premarked legend plate entitled OPEN COVER TO OPERATE (front view) and PULL-TO-START-PUSH-TO-STOP (rear view) is available. To order legend plate only, specify Cat. No. 800H-W174L.

(2) Padlock not included.

Table 18 - Miscellaneous

	Description	Style	No. of Wires	Cat. No.
 Cat. No. 800H-NPRD91	Sealing Well with Integral Type 3 Flange Seal These sealing wells can only be used with bases having 1 in. conduit entries. They reduce costs necessary with other conduit seal fittings for most installations (subject to applicable codes and laws) while maintaining Type 7 and 9 integrity. When using a sealing well with integral flange seal for Type 3 outdoor applications, an approved drain fitting must be provided. (Refer to National Electrical Code.)	With Integral Flange Seal, Type 3, 7, and 9	2	800H-NPRD90
			4	800H-NPRD91
			6	800H-NPRD92
			8	800H-NPRD93
	Description	**Style**		**Cat. No.**
 Cat. No. 800H-NP20	Type 3 Flange Seal This seal provides a Type 3 rating while maintaining Type 7 and 9 integrity. An approved drain (see listing) is required for condensation when using this option (refer to National Electrical Code). For a Type 4 rating, use sealing nuts and flange seal to seal the push button operators. Sealing kit includes flange seal and sealing nut. They are used with the Allen-Bradley enclosures listed on Complete Assembled Stations (Supplied with 3/4 in. Dead End Conduit Entry — Cat. No. 800H-1HZX7) for outdoor applications.	Flange Seal		800H-NP20
		Drain for 3/4 in. Conduit Opening		800H-NP21
		Drain for 1 in. Conduit Opening		800H-NP22
 Cat. No. 800H-NP21		Type 4 Sealing Nut		800H-N479
		Type 4 Sealing Kit		800H-N479F
	Description	**Color**		**Cat. No.**
 Cat. No. 800H-NP20	Color Insert Kit These color insert kits are used with illuminated push buttons, pilot lights, push-pull, and push-to-test push buttons (order quantity of 1 to receive kit of 5 inserts).	Red		800H-NP23R
		Green		800H-NP23G
		Amber		800H-NP23A
		Blue		800H-NP23B
		White		800H-NP23W

Replacement Lamps

Table 19 - Pilot Lights, Illuminated Push Buttons, Illuminated Push-pull, Illuminated Push-pull/Twist to Release, and Illuminated Selector Switches

Lamp	Type	Current, Typical	Lamp Voltage	ANSI No.	Catalog Voltage Code	Cat. No.
Incandescent	Full Voltage Transformer	150 mA/250 mA	6.3V AC	755/1866	6, 16, 26, 36, 46, 56, 76	800T-N65 (3)
	Full Voltage	80 mA	14V AC/DC	756	12	800T-N141 (3)
		70 mA	24V AC/DC	757	24	800T-N157 (3)
		50 mA	48V AC/DC	1835	48	800T-N365 (3)
	Full Voltage Resistor	22 mA	120V AC/DC	949	10, 11	800T-N169 (3)
	Flashing	150 mA	6V AC/DC	267	6	800T-N212 (3)
	Dual-input Diode	57 mA	24V AC/DC	24 MB	24	800T-N180 (3)
		21 mA	120V AC	90 MB	16	800T-N261 (3)
Neon	—	2 mA	120V AC/DC	B2A	10, 20	609-N9
Lamp	**Type**	**Current, Typical**	**Lamp Voltage**	**Leakage Current**	**Code**	**Cat. No. (4)**
LED	Universal	13 mA @ 24V DC 8.5 mA @ 120V AC (1)	3V (2)	3 mA	2	800T-N376*x*
	Transformer	60	6V	14 mA	16, 26, 46, 56	800T-N377*x*

(1) Typical current consumption values indicated are relative to the input of the power module.
(2) Lamp is intended for use with power module Cat. No. 800TC-N374 which has an input voltage rating of 12 . . . 130V AC/DC.
(3) Item is sold in multiples of five. Order quantity of five to receive package of five pieces.
(4) To complete the cat. no. replace the *x* with the first letter of the desired color: Green, Red, or White.

Table 20 - Legacy LED Lamps (1)

Lamp	Type	Current, Typical (3)	Lamp Voltage	Leakage Current	Catalog Voltage Code	Cat. No. (4)
LED (2)	Full Voltage	13 mA/22 mA	12V AC/DC	3 mA	12	800T-N362*x*
		20 mA/21 mA	24V AC/DC	3 mA	24	800T-N319*x*
		12 mA/17 mA	32V AC/DC	3 mA	32	800T-N363*x*
		9 mA/14 mA	48V AC/DC	3 mA	48	800T-N364*x*
		3.3 mA/6 mA	120V AC	—	10	800T-N320*x*
		4.5 mA/6.2 mA	130V AC/DC	3 mA	13	800T-N321*x*
	Full voltage	50 mA	6V AC	14 mA	6, 16, 26, 36, 46, 56, 76	800T-N318*x*
	Flashing	18 mA	24V AC/DC	—	—	800T-N319F*x* (5)

(1) In full voltage applications, these lamps are intended to be used with power module Cat. No. 800T-N330.
(2) All LEDs except 120V have an internal shunt resistor for use with solid-state outputs. LEDs do not illuminate below listed leakage current.
(3) Typical current draw varies with LED color. The first mA value is for a green or blue LED and the second mA value is for a red or amber LED.
(4) To complete the cat. no. replace the *x* with the first letter of the desired color: Amber, Green, Red, Blue, or White. White LEDs only available in 6V, 24V, 120V, and 130V.
(5) Flashing rate is 2 Hz.

Legend Plates

Table 21 - Blank Legend Plates

	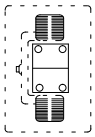 **Lever Style**	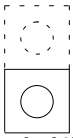 **Standard Size**	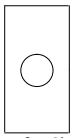 **Jumbo Size**	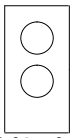 **Special Jumbo Size**
	Use 1 lever style legend with each lever type cover (Cat. Nos. 800H-NP14, -NP15, -NP16 or -NP34)	Use 2 standard size legends with each standard 2 hole cover (Cat. No. 800H-NP31)	Use 1 jumbo size legend with each standard 1 hole cover (Cat. No. 800H-NP30)	Use 1 special jumbo legend with each special 2 hole cover (Cat. No. 800H-NP33) Ex: Dual Push Button/Pigtail Pilot Light
Legend Plate Color	**Cat. No.**	**Cat. No.**	**Cat. No.**	**Cat. No.**
Gray	—	800H-Y59	800H-Y59J	800H-Y141J
Red	—	800H-Y121	800H-Y121J	—
Green	—	800H-Y136	800H-Y136J	—
Yellow	—	800H-Y700	800H-Y700J	—
Top Gray — Bottom Gray	800H-Y222	—	—	—
Top Gray — Bottom Red	800H-Y223	—	—	—
Left Green — Right Red	—	—	—	800H-Y140J
Gray with Potentiometer Graduations	—	800H-Y109	800H-Y109J	—

Table 22 - Custom Legend Plates

	Lever Style	**Standard Size**	**Jumbo Size**	**Special Jumbo Size**
	Use 1 lever style legend with each lever type cover (Cat. Nos. 800H-NP14, -NP15, -NP16 or -NP34)	Use 2 standard size legends with each standard 2 hole cover (Cat. No. 800H-NP31)	Use 1 jumbo size legend with each standard 1 hole cover (Cat. No. 800H-NP30)	Use 1 special jumbo legend with each special 2 hole cover (Cat. No. 800H-NP33) Ex: Dual Push Button/Pigtail Pilot Light
Legend Plate Color	**Cat. No.**	**Cat. No.**	**Cat. No.**	**Cat. No.**
Gray	—	800H-Y59E (1)	800H-Y59JE (1)	800H-Y141JE (1)
Red	—	800H-Y121E (1)	800H-Y121JE (1)	—
Green	—	800H-Y136E (1)	800H-Y136JE (1)	—
Yellow	—	800H-Y700E	800H-Y700JE	—
Top Gray — Bottom Gray	800H-Y222E (1)	—	—	—
Top Gray — Bottom Red	800H-Y223E (1)	—	—	—
Left Green — Right Red	—	—	—	800H-Y140JE (1)
Gray with Potentiometer Graduations	—	800H-Y109E (1)	800H-Y109JE (1)	—

(1) Horizontally mounted engraved legend plates (with standard or custom marking) are available. Add the letter H after the Y in the cat. no. Example: Cat. No. 800H-Y222E becomes 800H-YH222E.

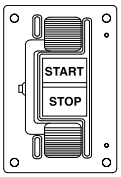

Table 23 - Lever Style Legend Plates with Standard Markings

Legend Marking Upper/Lower	Cat. No.	Legend Marking Upper/Lower	Cat. No.
HAND/AUTO	800H-Y228	OPEN/CLOSE	800H-Y205
JOG/RUN	800H-Y227	RUN/STOP (Red)	800H-Y226
JOG/STOP (Red)	800H-Y206	START/STOP (Red)	800H-Y200
ON/OFF	800H-Y225		

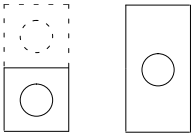

Table 24 - Legend Plates with Standard Markings

Legend Marking	Standard Size Cat. No.	Jumbo Size Cat. No.	Legend Marking	Standard Size Cat. No.	Jumbo Size Cat. No.
AUTO-OFF-HAND	800H-Y1	800H-Y1J	ON	800H-Y30	800H-Y30J
AUTO-MAN-HAND	800H-Y125	800H-Y125J	OPEN	800H-Y31	800H-Y31J
CLOSE	800H-Y2	800H-Y2J	OPEN-CLOSE	800H-Y32	800H-Y32J
CYCLE START	800H-Y62	800H-Y62J	OPEN-OFF-CLOSE	800H-Y33	800H-Y33J
DOWN	800H-Y3	800H-Y3J	OUT	800H-Y34	—
EMERG. STOP (Red)	800H-Y4	800H-Y4J	PUSH TO STOP-PULL TO START	800H-Y118	800H-Y118J
FAST	800H-Y5	800H-Y5J	POWER ON	800H-Y139	800H-Y139J
FEED START	800H-Y66	800H-Y66J	RAISE	800H-Y35	800H-Y35J
FEED STOP	800H-Y67	800H-Y67J	RAISE-LOWER	800H-Y36	800H-Y36J
FOR.-REV.	800H-Y6	800H-Y6J	RAISE-OFF-LOWER	800H-Y37	800H-Y37J
FOR.-OFF-REV.	800H-Y7	800H-Y7J	RESET	800H-Y38	800H-Y38J
FORWARD	800H-Y8	800H-Y8J	REVERSE	800H-Y39	800H-Y39J
FOURTH SPEED	800H-Y124	800H-Y124J	RUN	800H-Y40	800H-Y40J
FULL SPEED	800H-Y9	800H-Y9J	RUN-INCH	800H-Y134	800H-Y134J
HAND-AUTO	800H-Y10	800H-Y10J	RUN-JOG	800H-Y41	800H-Y41J
HAND-OFF-AUTO	800H-Y11	800H-Y11J	SAFE-RUN	800H-Y42	800H-Y42J
HIGH	800H-Y12	800H-Y12J	SECOND SPEED	800H-Y43	800H-Y43J
HIGH-LOW	800H-Y13	800H-Y13J	SLOW	800H-Y44	800H-Y44J
HIGH-OFF-LOW	800H-Y14	800H-Y14J	SLOW-FAST	800H-Y45	800H-Y45J
IN	800H-Y15	800H-Y15J	SLOW-OFF-FAST	800H-Y46	800H-Y46J
INCH	800H-Y16	800H-Y16J	SPEED (1)	800H-Y108	800H-Y108J
JOG	800H-Y17	800H-Y17J	START (Green)	800H-Y47	800H-Y47J
JOG FORWARD	800H-Y18	800H-Y18J	START-JOG	800H-Y48	800H-Y48J
JOG REVERSE	800H-Y19	800H-Y19J	START-STOP	800H-Y49	800H-Y49J
JOG-RUN	800H-Y20	800H-Y20J	STOP (Red)	800H-Y50	800H-Y50J
JOG-SAFE-RUN	800H-Y22	800H-Y22J	STOP-START	800H-Y51	800H-Y51J
JOG-STOP-RUN	800H-Y21	800H-Y21J	SUMMER-OFF-WINTER	800H-Y53	800H-Y53J
LEFT-RIGHT	800H-Y23	800H-Y23J	SUMMER-WINTER	800H-Y52	800H-Y52J
LOW	800H-Y24	800H-Y24J	TEST	800H-Y54	800H-Y54J
LOW SPEED	800H-Y25	—	THIRD SPEED	800H-Y55	—
LOWER	800H-Y26	800H-Y26J	UP	800H-Y56	800H-Y56J
OFF	800H-Y27	800H-Y27J	UP-DOWN	800H-Y57	800H-Y57J
OFF-COOLANT-ON	800H-Y28	800H-Y28J	UP-OFF-DOWN	800H-Y58	800H-Y58J
OFF-ON	800H-Y29	800H-Y29J			

(1) Graduated potentiometer type.

Approximate Dimensions and Shipping Weights

Dimensions in millimeters (inches). Dimensions are not intended to be used for manufacturing purposes.

Standard Legend Plate
(used with two-hole cover)

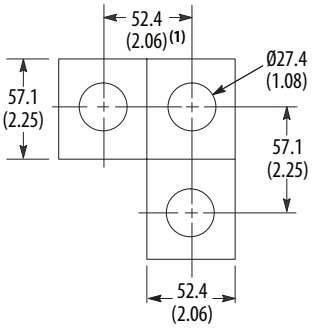

Jumbo Legend Plate
(used with one-hole cover)

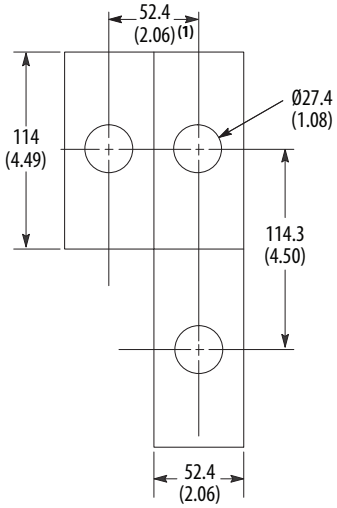

IMPORTANT Mounting hole requirements for components — 3/4 in. - 14 NPSM. (2)

(1) Sketch illustrates the minimum distance between center lines when mounting Bulletin 800H units with legend plates either side by side or one above the other in third-party enclosures. Minimum spacing without legend plate: When units are mounted so that the contact block terminals face each other, the 57.2 mm (2.25 in.) dimension must be used to get proper electrical clearance. When control units are mounted so that the contact block terminals do not face each other, the 46.8 mm (1.84 in.) dimension can be used.
(2) External thread major diameter: 1.034 in. max, 1.024 in. min.
Internal thread minor diameter: 0.958 in. min, 0.970 in. max.

Panel Thickness Requirements

Standard Barrel
(devices fit panels up to 25.4 mm [1 in.])

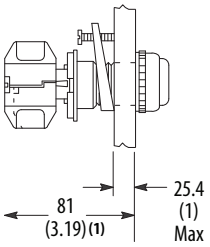

Long Barrel
(devices fit panels up to 63.5 mm [2.5 in.])

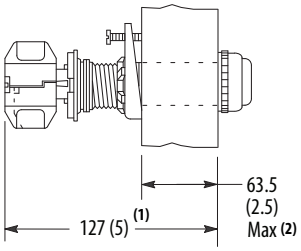

(1) This dimension for push buttons only.
(2) When mounting in a panel thicker than 54 mm (2.13 in.) a locking bracket is not required.

Dimensions in millimeters (inches). Dimensions are not intended to be used for manufacturing purposes.

Push Buttons

Dual Head

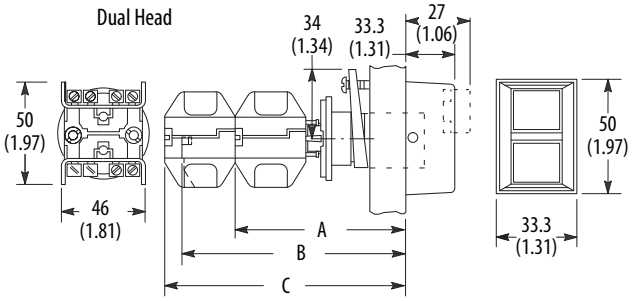

Dim.	A	B	C	Ship. Wt. [kg (oz)]
Standard Barrel	84.1 (3.31)	106.4 (4.19)	112.7 (4.44)	0.29 (10.38)
Long Barrel	116.7 (4.59)	138.9 (5.47)	145.2 (5.72)	0.37 (13)

Mushroom Head

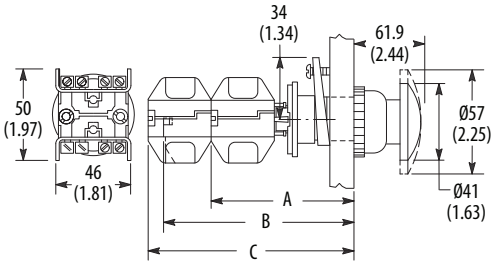

Push Button with Extra Long Guard

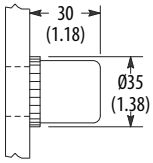

Flush Head

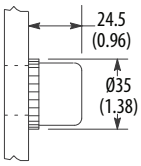

Extended Head

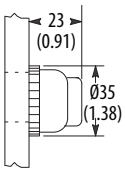

Type	Standard Barrel				Long Barrel			
	A (1)	B	C	Ship. Wt. [kg (oz)]	A (2)	B	C	Ship. Wt. [kg (oz)]
Mushroom, Flush, and Extended Head	81 (3.19)	105 (4.13)	111 (4.37)	0.28 (9.88)	127 (5)	149.2 (5.87)	155.6 (6.13)	0.38 (13.40)
Extra Long Guard	81 (3.19)	105 (4.13)	111 (4.37)	0.31 (10.93)	127 (5)	149.2 (5.87)	155.6 (6.13)	0.40 (14.11)

(1) When using sealed switch contact block, this dimension is 103 mm (4.06 in.).
(2) When using sealed switch contact block, this dimension is 149.2 mm (5.87 in.).

Dimensions in millimeters (inches). Dimensions are not intended to be used for manufacturing purposes.

Selector Switches

Standard Operator

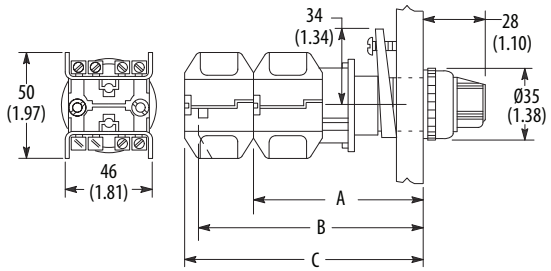

Knob Lever Operator

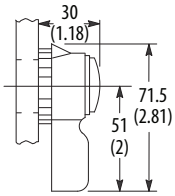

Wing Lever Operator

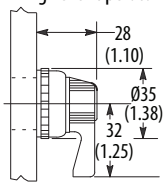

Cylinder Lock Operator

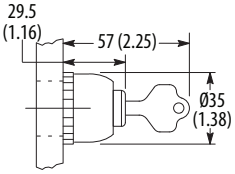

Type	Standard Barrel				Long Barrel			
	A (1)	B	C	Ship. Wt. [kg (oz)]	A (2)	B	C	Ship. Wt. [kg (oz)]
Standard and Knob Lever	81 (3.19)	105 (4.13)	111 (4.37)	0.27 (9.52)	127 (5)	149.2 (5.87)	155.6 (6.13)	0.41 (14.46)
Wing Lever	81 (3.19)	105 (4.13)	111 (4.37)	0.30 (10.58)	127 (5)	149.2 (5.87)	155.6 (6.13)	0.43 (15)
Cylinder Lock	81 (3.19)	105 (4.13)	111 (4.37)	0.32 (11.29)	127 (5)	149.2 (5.87)	155.6 (6.13)	0.45 (16)

(1) When using sealed switch contact block, this dimension is 103 mm (4.06 in.).
(2) When using sealed switch contact block, this dimension is 149.2 mm (5.87 in.).

Dimensions in millimeters (inches). Dimensions are not intended to be used for manufacturing purposes.

Illuminated Push Buttons or Push-to-test Pilot Lights

Transformer Type

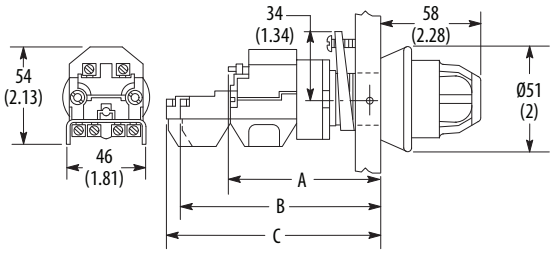

Full Voltage, Dual-input, or Neon Type

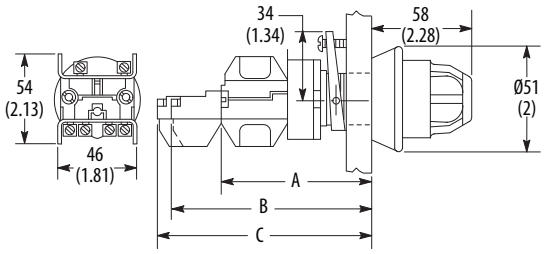

Description	Style	A (1)	B	C	Shipping Weight [kg (oz)]
Transformer Type	Standard Barrel	80.2 (3.16)	99 (3.90)	105 (4.13)	0.40 (14)
	Long Barrel	128.6 (5.06)	147.6 (5.81)	154 (6.06)	0.45 (16.19)
Full Voltage, Dual-input, or Neon Type	Standard Barrel	77 (3.03)	99 (3.90)	105 (4.13)	0.33 (11.63)
	Long Barrel	125.4 (4.94)	147.6 (5.81)	154 (6.06)	0.38 (13.44)

(1) When using sealed switch contact block, add 22.2 mm (0.88 in.) to the listed dimension.

Push-pull Units

Non-illuminated

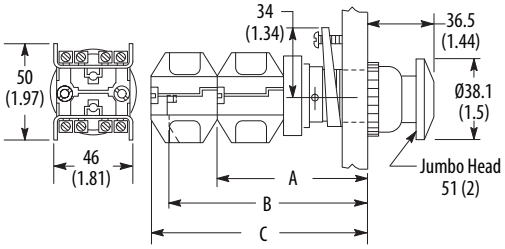

Illuminated

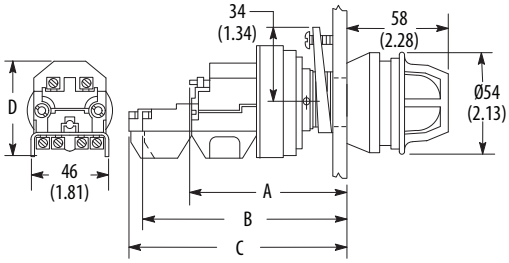

Description	Style	A (1)	B	C	D	Shipping Weight [kg (oz)]
Illuminated Transformer Type	Standard Barrel	90.5 (3.56)	115.9 (4.56)	117.5 (4.63)	54 (2.13)	0.44 (15.5)
	Long Barrel	118.3 (4.66)	137 (5.39)	143.7 (5.66)	54 (2.13)	0.49 (17.44)
Illuminated Full Voltage Type	Standard Barrel	87.3 (3.44)	115.9 (4.56)	117.5 (4.63)	50 (1.97)	0.36 (12.81)
	Long Barrel	115.1 (4.53)	137 (5.39)	143.7 (5.66)	50 (1.97)	0.41 (14.75)
Non-illuminated Push-pull Units	Standard Barrel	88.9 (3.50)	111.1 (4.37)	117.5 (4.63)	—	0.32 (11.13)
	Long Barrel	115.1 (4.53)	137 (5.39)	143.7 (5.66)	—	0.34 (12.31)

(1) When using sealed switch contact block, add 22.2 mm (0.88 in.) to the listed dimension.

Dimensions in millimeters (inches). Dimensions are not intended to be used for manufacturing purposes.

Pilot Lights

Transformer Type

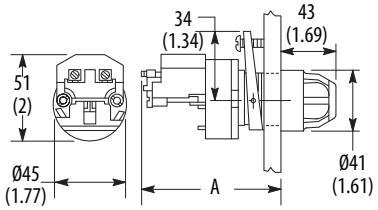

Full Voltage, Pigtail Type

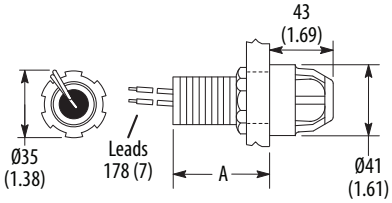

Full Voltage, Dual-input or Neon Type

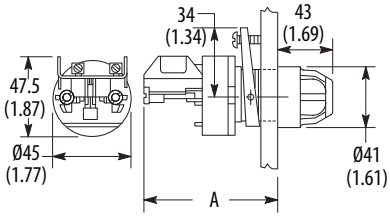

Description	Style	A	Shipping Weight [kg (oz)]
Transformer type and dual-input transformer-type pilot lights	Standard Barrel	80 (3.16)	0.24 (8.56)
	Long Barrel	115.9 (4.56)	0.85 (30.25)
Full voltage, neon, or dual-input diode and resistor-type pilot lights	Standard Barrel	77 (3.03)	0.17 (5.81)
	Long Barrel	112.7 (4.44)	0.77 (27.5)
Full-voltage pigtail-type pilot lights	Standard Barrel	55.5 (2.19)	0.16 (5.63)
	Long Barrel	94 (3.70)	0.24 (8.31)

Potentiometer Units

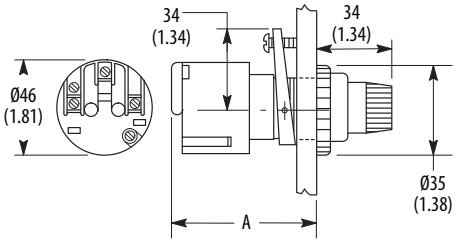

Style	A	Shipping Weight [kg (oz)]
Standard Barrel	79.5 (3.13)	0.16 (5.38)
Long Barrel	114.3 (4.5)	0.23 (8)

Dimensions in millimeters (inches). Dimensions are not intended to be used for manufacturing purposes.

Shallow Base Stations

Shallow Base Station Lever Type

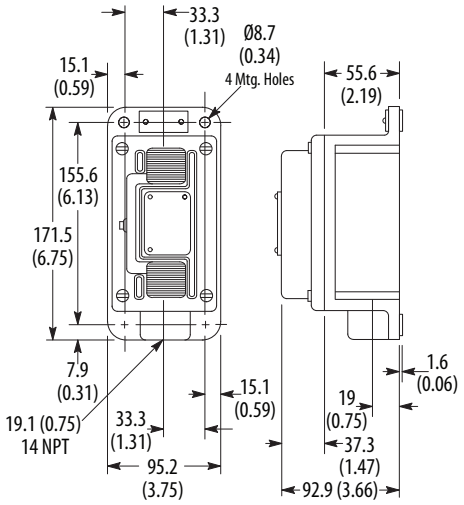

Shipping Weight 1.36 kg (3 lb)

Shallow Base Station Component Type
1-Gang (one or two devices)

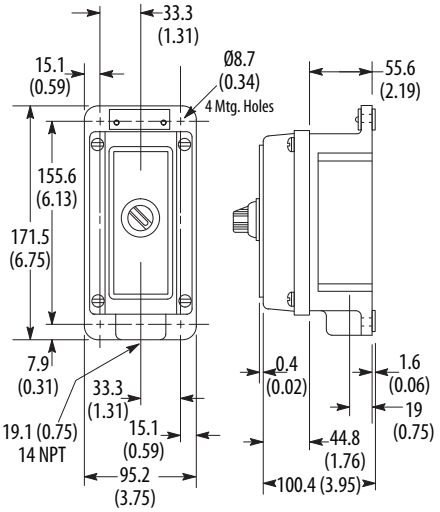

Shipping Weight 1.58 kg (3.5 lb)

Deep Base Stations

Deep Base Station Lever Type
1-Gang

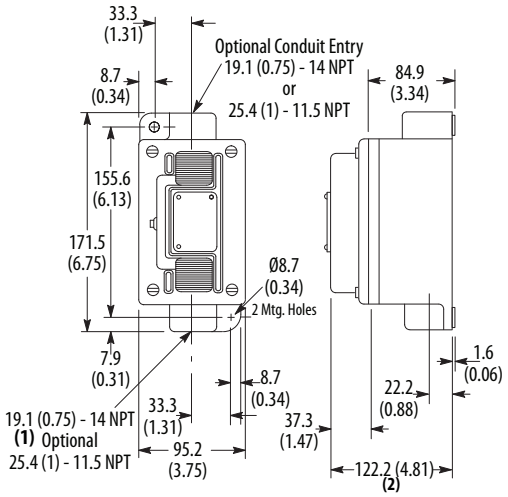

Shipping Weight 1.81 kg (4 lb)

Deep Base Component Lever Type
1-Gang (one or two devices)

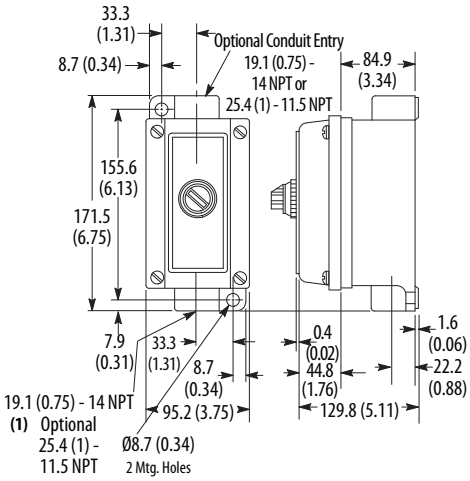

Shipping Weight 2.04 kg (4.5 lb)

(1) When using a flange seal, an approved drain fitting must be provided (refer to National Electrical Code).

(2) When used, add the following to the max depth: flange seal adds 4.8 mm (0.19 in.); sealing well with integral flange seal adds 12.7 mm (0.5 in.).

Dimensions in millimeters (inches). Dimensions are not intended to be used for manufacturing purposes.

Factory-assembled Stations

For depth dimensions, see Deep Base Stations on page 35.

Control Station, 2-Gang (up to four devices)

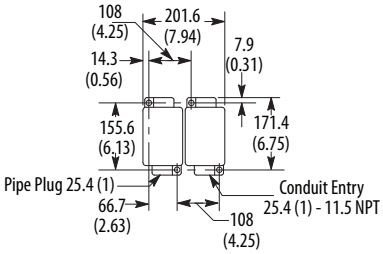

Shipping Weight 4.54 kg (10 lb)

Control Station, 3-Gang (up to six devices)

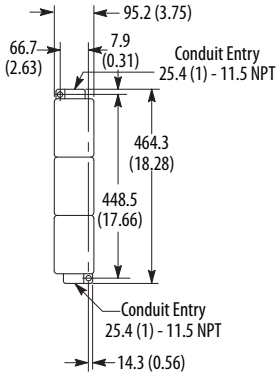

Shipping Weight 7.26 kg (16 lb)

Control Station, 2-Gang (up to four devices)

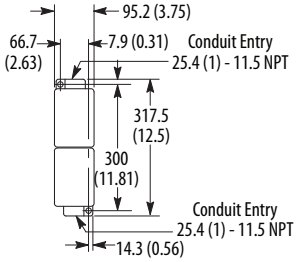

Shipping Weight 4.54 kg (10 lb)

Control Station, 4-Gang (up to eight devices)

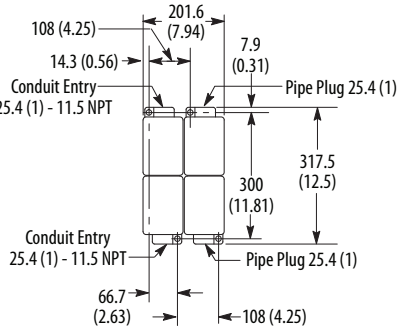

Shipping Weight 9.07 kg (20 lb)

Control Station, 6-Gang (up to 12 devices)

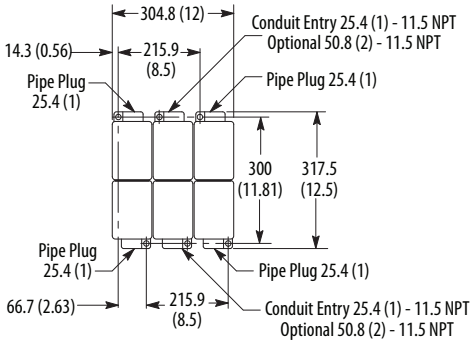

Shipping Weight 14.5 kg (32 lb)

Control Station, 8-Gang (up to 16 devices)

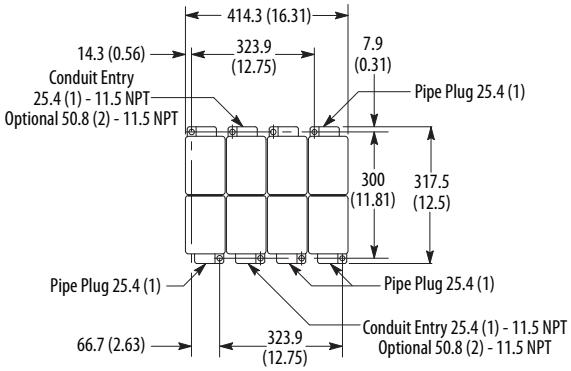

Shipping Weight 18.1 kg (40 lb)

Bulletin 800R Hazardous Location Push Buttons

Our Bulletin 800R Hazardous Location Push Buttons are designed for Division 2/Zone 2 hazardous locations. They consist of Bulletin 800H (Type 4/4X/13) or Bulletin 800T (Type 4/13) operators with sealed contact blocks. These units are available as factory assembled stations or as components for field assembly.

Specifications

ATTENTION: Performance data that is given in this publication is provided only as a guide for you to determine suitability and does not constitute a performance warranty of any kind. Such data may represent the results of accelerated testing at elevated stress levels, and you are responsible for correlating the data to actual application requirements. ALL WARRANTIES AS TO ACTUAL PERFORMANCE, WHETHER EXPRESS OR IMPLIED, ARE EXPRESSLY DISCLAIMED.

Table 25 - Electrical Ratings

Contact Ratings	See the contact ratings on page 38
Dielectric Strength	2200V for 1 minute, 1300V for 1 minute (Logic Reed)
Electrical Design Lifecycles	1,000,000 at max rated load, 200,000 at max rated load (Logic Reed)

Table 26 - Mechanical Ratings

Vibration		10…2000 Hz 1.52 mm displacement (peak-to-peak) max/10 G max (except Logic Reed)
Shock		1/2 cycle sine-wave for 11 ms ≥25 G (contact fragility) and no damage at 100 G
Degree of Protection		Type 4/4X/13, 4/13; Watertight/Corrosion-resistant IEC 529 IP66/65
Mechanical Design Lifecycles		
Push Buttons	(Momentary, Non-illuminated)	1,000,0000 min.
	(Momentary, Illuminated)	250,000 min.
	(Push-pull/Twist-to-release)	250,000 min.
Selector Switches	(Non-illuminated)	1,000,000 min.
	(Illuminated)	200,000 min.
All other devices		200,000 min.
Contact Operation		Logic Reed and sealed switch contact blocks: single break magnetic
Typical Operating Forces		
Operators without contact blocks:		Flush, extended, standard mushroom, jumbo plastic mushroom: 2 lb max Maintained selector switch: 3.6 in•lb max
Spring-return Selector Switches		3.6 in•lb to stop 0.2 in•lb to return
Illuminated Push Buttons and Push-to-test Pilot Lights		5 lb max
3-position Push-pull		8 lb max push to in position or pull to center position (15 lb max pull to out position)
Push-pull and Push-pull/Twist		9 lb max push or pull 30 in•oz max twist, 6 in•oz min return
Contact Blocks	Logic Reed	1 lb max
	Sealed Switch	3 lb max at 0.205 in. plunger travel
	Stackable Sealed Switch	1 lb max

Table 27 - Environmental Ratings

Temperature Range (1)	Operating	-40…+55 °C (-40…+131 °F)
	Storage	-40…+85 °C (-40…+185 °F)
Humidity		50% at 40 °C (104 °F)

(1) Operating temperatures below freezing are based on the absence of freezing moisture and liquids. Consult your local Rockwell Automation sales office or Allen-Bradley distributor for use in lower temperature applications.

Control Stations

Bulletin 800R control stations are designed for Division 2 hazardous locations. They consist of Bulletin 800H (Type 4/4X/13) or Bulletin 800T (Type 4/13) operators with sealed contact blocks. Bulletin 800R units are available as factory assembled stations or as components for field assembly.

Hazardous Locations

Since the contacts are enclosed in a hermetically sealed chamber, the contact block is suitable for use in Class I, Division 2 Groups A, B, C, and D hazardous locations and is listed by Underwriters Laboratories for this class of service. Complete stations as shown on https://ab.rockwellautomation.com/Push-Buttons/Hazardous-Location/800R-Push-Buttons#selection can be used for Class I, Division 2 applications. The individual components that are shown in the Bulletin 800T and 800H sections are also suitable for Class I, Division 2 locations providing they are suitably mounted by the customer in an enclosure as required for the application and by applicable codes and laws.

IMPORTANT Allen-Bradley Logic Reed contact blocks are also listed by Underwriters Laboratories for the Division 2 hazardous locations that are listed above.

WARNING: The complete stations and individual components that are listed on https://ab.rockwellautomation.com/Push-Buttons/Hazardous-Location/800R-Push-Buttons#selection are not suitable for use in Class I Division 1 hazardous locations. For Class I and II Division 1 hazardous locations, order Bulletin 800H Type 7 and 9 stations and units.

Sealed Switch Contact Ratings

Maximum continuous current I_{th} 5 A. Bulletin 800T and 800H units have control circuit ratings with sealed switch contact blocks as follows:

Table 28 - Sealed Switch Contact Ratings

Max Operational Volts U_e	Utilization Category		Rated Operational Currents		
	IEC	NEMA	Volts U_e	Make	Break
AC 600	AC-15	B600	120…600	3600VA	360VA
			0…120	30 A	3VA
DC 300	DC-13	P300	24…300	138VA	
			0…24	5 A	

Stackable Sealed Switch Contact Ratings

Maximum continuous current I_{th} 2.5 A. Bulletin 800T and 800H units have control circuit ratings with sealed switch contact blocks as follows:

Table 29 - Sealed Switch Contact Ratings

Max Operational Volts U_e	Utilization Category		Rated Operational Currents		
	IEC	NEMA	Volts U_e	Make	Break
AC 300	AC-15	C300	120…300	1800VA	180VA
			0…120	15 A	1.5A
DC 150	DC-13	Q150	24…150	69VA	
			0…24	2.5 A	

Logic Reed Contact Ratings

Maximum DC: 30V, 0.06 A Maximum AC: 150V, 0.15 A

Should only be used with resistive loads.

Standards Compliance

- ISA 12.12.01
- CSA C22.2, No. 213

Certifications

- UL Listed (File No. E10314, Guide No. NOIV)
- CSA Certified (File No. LR11924)

Complete Assembled Stations

IMPORTANT For Class I, Division 2 push button operators, see https://ab.rockwellautomation.com/Push-Buttons/30-mm/800T-800H or contact your local Rockwell Automation sales office or Allen-Bradley distributor.

Surface Mount
Cat. No. 800R-1TA

Stainless Steel
Booted Operator Station
Cat. No. 800R-1HA4T

Stainless Steel
Bootless Operator Station
Cat. No. 800R-1HA4TL

Rosite
Booted Operator Station
Cat. No. 800R-1HA4R

Rosite
Bootless Operator Station
Cat. No. 800R-1HA4RL

Table 30 - Class I, Division 2

Operator	Contact Symbol		Contact Action	Button Type	Button Color	Legend Marking	Cast Aluminum Enclosures (1)	Stainless Steel Enclosures (2)	Rosite Glass Polyester Enclosures (2)
							Surface Mount	Bootless Operator Station (3)	
							Cat. No.	Cat. No.	Cat. No.
One Push Button		1 N.O. - 1 N.C.	Momentary	Flush	Green	START	800R-1TB	800R-1HB4TL	800R-1HB4RL
				Extended	Red	STOP	800R-1TA	800R-1HA4TL	800R-1HA4RL
				Flush	Black	No Legend	800R-1TX	800R-1HX4TL	800R-1HX4RL
Two Push Buttons		1 N.O. - 1 N.C. Each Button	Momentary	Flush Extended	Green Red	START STOP	800R-2TA	800R-2HA4TL	800R-2HA4RL
				Flush Flush	Black Black	No Legend No Legend	800R-2TX	800R-2HX4TL	800R-2HX4RL
One Pilot Light, Two Push Buttons		1 N.O. - 1 N.C. Each Button	Momentary	120V AC Flush Extended	Red Green Red	No Legend START STOP	800R-2TAR	800R-2HAR4TL	800R-2HAR4RL
				120V AC Flush Flush	Red Black Black	No Legend No Legend No Legend	800R-2TXR	800R-2HXR4TL	800R-2HXR4RL
3-position Selector Switch	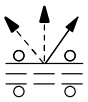	1 N.O. - 1 N.C.	Maintained	Knob Lever	Black with white insert	HAND OFF AUTO	800R-R3TA	800R-R3HA4TL	800R-R3HA4RL
				Knob Lever	Black with white insert	No Legend	800R-R3TX	800R-R3HX4TL	800R-R3HX4RL
One Push Button		1 N.O. - 1 N.C.	Maintained	Push-pull/ Twist	Red	EMRG.STOP	800R-1TAM	800R-1HAM4TL	800R-1HAM4RL
Two Push Buttons		1 N.O. - 1 N.C. Each Button	Maintained	Flush Extended	Green Red	START STOP	800R-2TAM	800R-2HAM4TL	800R-2HAM4RL
				Flush Flush	Black Black	No Legend No Legend	800R-2TXM	800R-2HXM4TL	800R-2HXM4RL

(1) Type 4/13
(2) Type 4/4X/13
(3) To order a control station with booted push button operators, remove the L from the end of the catalog number. Example: Cat. No. 800R-1HA4TL becomes Cat. No. 800R-1HA4T. This does not apply to 3-position selector switch stations.

Custom-built Stations

Table 30 on page 39 lists the most commonly used push button stations. Stations not listed in the table may be ordered as custom-built stations.

The catalog number used to identify custom-built Bulletin 800R push button stations, which are built at the factory, are catalog numbers listed for the enclosure only, except letter W is substituted for the letter Z and with a station serial number.

Request for Quote

Please submit your request for quote of a custom-built station to racustomercare_gps@ra.rockwell.com, including the following information:

1. Catalog number of the enclosure.
2. Catalog number of the control units.
3. Catalog number of legend plates. Indicate text if custom marking is required.
4. Catalog number of accessories (such as, guards or locking attachments)
5. Specify vertical/horizontal mounting.
6. Specify desired operator mounting sequence. Inclusion of a sketch is recommended. If no information is given, standard configurations are used.

Table 31 - Enclosures Only

	Die Cast (Type 4/13)	Stainless Steel (Type 4/4X/13)	Rosite Glass Polyester (Type 4/4X/13)
Units (1)	Cat. No.	Cat. No.	Cat. No.
1	800R-1TZ	800R-1HZ4	800R-1HZ4R
2	800R-2TZ	800R-2HZ4	800R-2HZ4R
3	800R-3TZ	800R-3HZ4	800R-3HZ4R
4	800R-4TZ	800R-4HZ4	800R-4HZ4R
5	—	800R-5HZ4	—
6	800R-6TZ	800R-6HZ4	800R-6HZ4R

(1) Number of units that can be mounted in enclosure.

IMPORTANT Enclosure and conduit dimensions are detailed on page 41, except for the fiberglass enclosures, which are found in publication 800-TD009.

Approximate Dimensions & Shipping Weights

Dimensions in millimeters (inches). Dimensions are not intended to be used for manufacturing purposes.

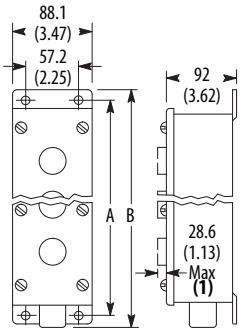

Type 4/4X/13
Stainless Steel
Watertight/Oiltight/
Corrosion-resistant Enclosure

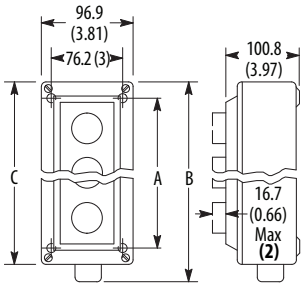

Type 4/4X/13
Rosite Glass Polyester
Watertight/Oiltight/
Corrosion-resistant Enclosure

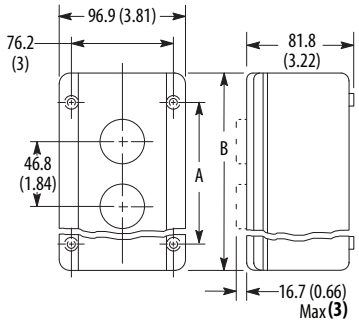

Type 4/13
Cast Aluminum Enclosure
Watertight/Oiltight

(1) Selector switch is 29.4 (1.16) max; pilot light is 31 (1.22).
(2) Selector switch is 27.8 (1.09) max; pilot light is 29.4 (1.16) max.
(3) Selector switch is 30.9 (1.22) max; pilot light is 32.5 (1.28).

Dimension	Number of Units					
	1	2	3	4	5	6
Stainless Steel Type 4/4X/13						
A	135 (5.31)	178 (7)	225 (8.86)	271 (10.67)	318 (12.52)	360 (14.17)
B	163 (6.42)	210 (8.25)	257 (10.12)	304 (11.97)	359 (14.13)	403 (15.87)
Pipe Tap Size	19.05 (0.75)				25.4 (1)	
Glass Polyester Type 4/4X/13						
A	114 (4.5)	114 (4.5)	159 (6.25)	203 (8)	308 (12.13)	308 (12.13)
B	181 (7.13)	181 (7.13)	221 (8.7)	271 (10.67)	378 (14.88)	378 (14.88)
C	149 (5.87)	149 (5.87)	192 (7.56)	241 (9.5)	343 (13.5)	343 (13.5)
Pipe Tap Size	19.05 (0.75)				25.4 (1)	
Cast Aluminum Type 4/13						
A	69.8 (2.75)	114 (4.5)	159 (6.25)	203 (8)	—	308 (12.13)
B	106 (4.17)	149 (5.87)	192 (7.56)	241 (9.5)	—	343 (13.5)
Conduit Opening	19.05 (0.75) 14 NPT				—	25.4 (1) 11.5 NPT

Panel Mounting Instructions

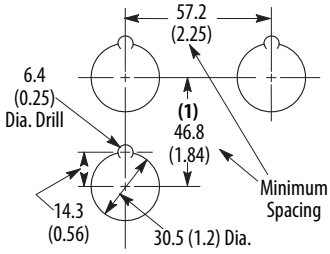

(1) Minimum vertical spacing dimension for jumbo legend plate is 62.7 (2.47).

Dimensions in millimeters (inches). Dimensions are not intended to be used for manufacturing purposes.

Operator Extension in Front of Panel

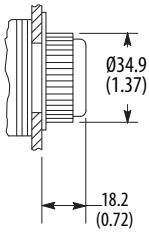

Type 4/4X/13
Booted Flush and Extended
Head Push Button

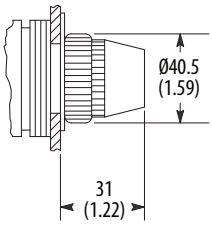

Type 4/4X/13
Pilot Light

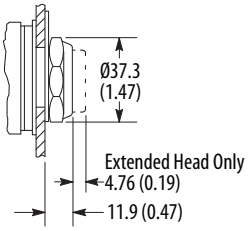

Type 4/13 and Type 4/4X/13
Bootless Flush and Extended
Head Push Button

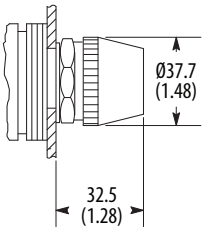

Type 4/13
Pilot Light

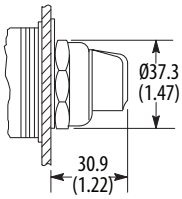

Type 4/13 and Type 4/4X/13
Standard Knob Selector
Switches

Bulletin 800G Hazardous Location Push Buttons

Our Bulletin 800G Hazardous Location Push Buttons are designed for industrial applications where flammable gases, vapors, or dusts may be present. These solutions are available as complete factory-assembled stations or individual components. Individual components can be used in panel mount or base mount installations.

This family of products consists of two product subsets to meet the requirements of your application:

- c-UL-us Models

  c-UL-us certified products for Class I Division 2 and Class I Zone 1 hazardous location applications. These products also comply with outdated EN 60079 series standards for ATEX applications.

- "-EX" Models

  ATEX, IECEx, INMETRO, and NEPSI certified products for Zone 1 and Zone 21 hazardous location applications. These products comply with EN60079 and IEC 60079 series standards per the Declaration of Conformity found at: rok.auto/certifications.

Specifications — c-UL-us Models

ATTENTION: Performance data that is given in this publication is provided only as a guide for you to determine suitability and does not constitute a performance warranty of any kind. Such data may represent the results of accelerated testing at elevated stress levels, and you are responsible for correlating the data to actual application requirements. ALL WARRANTIES AS TO ACTUAL PERFORMANCE, WHETHER EXPRESS OR IMPLIED, ARE EXPRESSLY DISCLAIMED.

Standard Assembled Stations

Table 32 - Mechanical Ratings

Protection Type	II 2G Ex edm IIC T6 AEx edm IIC T6 Ex edm IIC T6
Certification	PTB 01 ATEX 1036 UL E10314 CE0044
Rated Insulation Voltage, Max	690V AC
Rated Current	Dependent on components used
Degree of Protection	IP66, Type 4X: -20…+60 °C (-4…+140 °F) IP54: -55…+60 °C (-67…+140 °F)
Enclosure Material	
Enclosure	Thermoplastic
Seals	EPDM
Cable Glands	
Standard	12.7 mm (1/2 in.) NPT conduit hub
Custom	• Metal M20 for cable – Outer sheath: Ø 15.5…21.1 mm (Ø 0.61…0.83 in.) • Metal M25 for cable – Outer sheath: Ø 20.3…27.4 mm (Ø 0.80…1.08 in.) • 19.05 mm (3/4 in.) NPT conduit hub
Wire/Cable Size	2.5 mm^2 (12 AWG) stranded max.
PE Conductor Terminals	4 x 2.5 mm^2 (12 AWG) stranded max.
Storage Temperature	-55…+70 °C (-67…+158 °F)
Operational Temperature Range	-55…+60 °C (-67…+140 °F)

Assembled Stations

Bulletin 800G control stations are designed for Class I, Zone 1 and 2 and Class 1/Division 2 hazardous location applications. They consist of Bulletin 800G front-of-panel components with back-of-panel components: contact blocks or power modules. Bulletin 800G units are available as factory assembled stations or as components for component replacement. A third party must inspect and certify field assembled stations that are used in a Class I, Zone 1 or Zone 2 application.

Components

Because the back-of-panel components are enclosed in a flame-proof enclosure, they are suitable for use in Class I, Zone 1 and Zone 2 Groups IIA, IIB, and IIC and Class I/Division 2, Groups A, B, C, and D hazardous locations and are listed by Underwriters Laboratories and certified by PTB for this class of service. The components have "d" and "e" protection methods except for the cable termination. Cable termination has only "d" protection method, which the cable, not the contacts, restricts.

WARNING: The c-UL-us assembled stations and individual components that are listed on https://ab.rockwellautomation.com/Push-Buttons/Hazardous-Location/800G#selection are not suitable for the use in Zone 0/20, Class I/Division 1, and Class II/Division 1 and 2 applications. For Class I and II/Division 1 hazardous locations, order Bulletin 800H Type 7 and 9 stations and units.

These products are not intended for ATEX applications as they do not comply with current EN60079 series standards. For ATEX applications, see Specifications — "-Ex" Models (ATEX/IECEx) on page 48.

B_{10D}/ $MTTF_D$/$Lambda_D$ Specifications

Table 33 - Non-illuminated Components

Description	Cat. No.	B_{10D} Value [cycles] (1)
Front of Panel		
Push Button (Non-illuminated – Flush)	800G-F*x*	5,800,000
Momentary Mushroom Push Button	800G-M2	
Double Push Button (Non-illuminated – Flush)	800G-U2FX	
	800G-V2FX	
Key Release Mushroom Push Button	800G-MKE	12,000
Key Release Push Button	800G-K*x*	
Two-position Selector Switch (Knob)	800G-S*x*2*x*	
Three-position Selector Switch (Knob)	800G-S*x*3*x*	
Two-position Key Selector Switch (Key Operated)	800G-KS*x*2*x*	
Three-position Key Selector Switch (Key Operated)	800G-KS*x*3*x*	
Push-pull Mushroom Push Button	800G-MPE	140,000
Back of Panel		
Base Mount Contact Block (Screw Termination)	800G-XB*x*	1,200,000
Latch Mount Contact Block (Screw Termination)	800G-XLS*x*	
Latch Mount Contact Block (Cable Termination)	800G-XLC3*x*	

(1) The B_{10D} value [cycles] states the number of switching cycles up to which 10% of the elements failed dangerously. The determination was done via a statistical evaluation of field data.

Table 34 - Illuminated Components

Description	Cat. No.	$MTTF_D$ (Years) (1)	$Lambda_D$ (Dangerous Failures/Year) (1)
Illuminated Push Button			
Push Button (Illuminated – Flush)	800G-LF*x*	3.92E+02 Years	2.91E-07
Used with one of the following:			
Base Mount Power Module with Contact Block (Screw Termination)	800G-DB*x*X*x*		
Latch Mount Power Module with Contact Block (Screw Termination)	800G-DLS*x*X*x*		
Latch Mount Power Module with Contact Block (Cable Termination)	800G-DLC3*x*X*x*		
Pilot Light			
Pilot Light	800G-P*x*	9.34E+03 Years	1.22E-08
Used with one of the following:			
Base Mount Power Module (Screw Termination)	800G-DB*x*		
Latch Mount Power Module (Screw Termination)	800G-DLS*x*		
Latch Mount Power Module (Cable Termination)	800G-DLC3*x*		

(1) The operating hours of all delivered products or comparable product clusters are determined and divided by the number of reports of failures for that product. The result is the $MTTF_D$ or $Lambda_D$ rating we can offer for the products our customers received.

Contact Blocks

Table 35 - Electrical Ratings

	Screw Termination			Cable Termination		
Rated Insulation Voltage	690V			400V (limited by the cable, not the contacts)		
Rated Voltage	250V (per ATEX certificates)		24V	250V (per ATEX certificates)		24V
Rated Operating Currents	16 A	10 A	1 A	16 A	10 A	1 A
Utilization Category	AC-12	AC-15	DC-13	AC-12	AC-15	DC-13
Thermal Continuous Current	16 A at 40 °C (104 °F), 11 A at 60 °C (140 °F)			16 A at 40 °C (104 °F), 11 A at 60 °C (140 °F)		
Contact Rating per UL 508	A600		P600	A600		P600
Rated Voltage per UL Contact Rating, Max	600V		600V	600V		600V
Make Current at Rated Voltage per UL Contact Rating, Max	12 A		0.2 A	12 A		0.2 A
Break Current at Rated Voltage per UL Contact Rating, Max	1.2 A		0.2 A	1.2 A		0.2 A
Thermal Continuous Test Current per UL Contact Rating	10 A		5 A	10 A		5 A
Short Circuit Protection	10 A Slow Blow, Type DT, gl			10 A Slow Blow, Type DT, gl		

Table 36 - Mechanical Ratings

		Screw Termination	Cable Termination
Protection Type		II 2G Ex de IIC Class I, Zone 1 AEx de IIC Class I, Zone 1 Ex de IIC	II 2G Ex d IIC T6 Class I, Zone 1 AEx d IIC T6 Class I, Zone 1 Ex d IIC T6
Certification		PTB 01 ATEX 1040U UL E10314	PTB 01 ATEX 1039X UL E10314
Contact Options		1 N.O. - 1 N.C. 2 N.O. 2 N.C.	1 N.O. - 1 N.C. 2 N.O. 2 N.C.
Contact Material		$AgSnO_2$	$AgSnO_2$
Housing Material		Thermoplastic	Thermoplastic
Physical Shock Resistance		DIN IEC 68 part 2-27, 30 g, 18 ms	DIN IEC 68 part 2-27, 30 g, 18 ms
Design Life		1,000,000 cycle mechanical life	1,000,000 cycle mechanical life
Operating Force, Max		22.2 N (5 lb) to open N.C. 15.6 N (3.5 lb) to close N.O. 28.9 N (6.5 lb) full travel	22.2 N (5 lb) to open N.C. 15.6 N (3.5 lb) to close N.O. 28.9 N (6.5 lb) full travel
Temperature (Storage/Transport)		-55…+70 °C (-67…+158 °F)	-55…+70 °C (-67…+158 °F)
Operational Temperature Range		-55…+60 °C (-67…+140 °F)	-55…+60 °C (-67…+140 °F)
Wire/Cable Size		2.5 mm^2 (12 AWG) stranded max	3 m (9.8 ft) long cable 4 x 1.5 mm^2 (9.1 mm/0.36 in. OD)
Degree of Protection		IP20, with operators and enclosure IP66	With operators IP67
Mounting	Base Mount	Secures to rail integral to enclosure base	—
	Panel Mount	Secures to operator with integral latch	Secures to operator with integral latch

Power Module

Table 37 - Electrical Ratings

	Screw Termination	Cable Termination
Rated Insulation Voltage	300V	300V
Power Consumption	≤1 W	≤1 W
Lamp	Multi-LED (Red, Yellow, Green, White, Blue)	Multi-LED (Red, Yellow, Green, White, Blue)
Rated Voltage	12…60V DC 12…250V AC	24…60V DC 24…60V AC and 110…250V AC

Table 38 - Mechanical Ratings

		Screw Termination	Cable Termination
Protection Type		II 2G Ex de IIC Class I, Zone 1 AEx de IIC Class I, Zone 1 Ex de IIC	II 2G Ex d IIC T6 Class I, Zone 1 AEx d IIC T6 Class I, Zone 1 Ex d IIC T6
Certification		PTB 01 ATEX 1037U UL E10314	PTB 01 ATEX 1038X UL E10314
Housing Material		Thermoplastic	Thermoplastic
Physical Shock Resistance		DIN IEC 68 part 2-27, 30 g, 18 ms	DIN IEC 68 part 2-27, 30 g, 18 ms
Design Life		100,000 hours	100,000 hours
Temperature (Storage/Transport)		-55…+70 °C (-67…+158 °F)	-55…+70 °C (-67…+158 °F)
Operational Temperature Range		-55…+60 °C (-67…+140 °F)	-55…+60 °C (-67…+140 °F)
Wire/Cable Size		2.5 mm^2 (12 AWG) stranded max	3 m (9.8 ft) long cable 4 x 1.5 mm^2 (9.1 mm/0.36 in. OD)
Degree of Protection		IP20, with operators and enclosure IP66	With operators IP67
Mounting	Base Mount	Secures to rail integral to enclosure base	—
	Panel Mount	Secures to operator with integral latch	Secures to operator with integral latch

Power Module/Contact Block Combination

Table 39 - Electrical Ratings

	Screw Termination		Cable Termination	
Rated Insulation Voltage	300V		300V	
Power Consumption	≤1 W		≤1 W	
Lamp	Multi-LED (red, yellow, green, white, blue)		Multi-LED (red, yellow, green, white, blue)	
Rated Voltage	24…48V DC 24…250V AC		24…48V DC 24…250V AC	
Contact Rating Per UL 508	A600	P600	A600	P600
Thermal Continuous Current	1 A	0.25 A	1 A	0.25 A
Rated Voltage, Max	600V	600V	600V	600V

Table 40 - Mechanical Ratings

		Screw Termination	Cable Termination
Protection Type		II 2G EEx de IIC Class I, Zone 1 AEx de IIC Class I, Zone 1 Ex de IIC	II 2G EEx d IIC T6 Class I, Zone 1 AEx d IIC T6 Class I, Zone 1 Ex d IIC T6
Certification		PTB 01 ATEX 1037U UL E10314	PTB 01 ATEX 1038X UL E10314
Housing Material		Thermoplastic	Thermoplastic
Physical Shock Resistance		DIN IEC 68 part 2-27, 30 g, 18 ms	DIN IEC 68 part 2-27, 30 g, 18 ms
Design Life		100,000 hours	100,000 hours
Temperature (Storage/Transport)		-55…+70 °C (-67…+158 °F)	-30…+70 °C (-22…+158 °F)
Operational Temperature Range		-55…+60 °C (-67…+140 °F)	-30…+60 °C (-22…+140 °F)
Wire/Cable Size		2.5 mm^2 (12 AWG) stranded max	3 m (9.8 ft) long cable 4 x 1.5 mm^2 (9.1 mm/0.36 in. OD)
Degree of Protection		IP20, with operators and enclosure IP66	With operators IP67
Mounting	**Base Mount**	Secures to rail integral to enclosure base	—
	Panel Mount	Secures to operator with integral latch	Secures to operator with integral latch

Front-of-panel Operators

Table 41 - Mechanical Ratings

Device	Operational Temperature	Operating Force (1)	Mechanical Design Life	Impact Resistance	Materials	Ingress Protection	Ex Protection Type
Push Button	-55…+70 °C (-67…+158 °F)	6.7 N (1.5 lb)	1,000,000 cycles	7 N•m	• Housing: Thermoplastic • Seals: EPDM	IP66: -20…+70 °C (-4…+158 °F) IP54: -55…-20 °C (-67…-4 °F) Type 4X: -20…+70 °C (-4…+158 °F)	II 2G EEx e II PTB 01 ATEX 1035U UL E10314
Selector Switch	-55…+70 °C (-67…+158 °F)	—					
Key Release Push Button	-55…+70 °C (-67…+158 °F)	15.6 N (3.5 lb)					
Key Release Mushroom	-55…+70 °C (-67…+158 °F)	15.6 N (3.5 lb)					
Mushroom	-55…+70 °C (-67…+158 °F)	6.7 N (1.5 lb)					
E-stop	-55…+70 °C (-67…+158 °F)	44.5 N push/89 N pull (10 lb push/20 lb pull)	6000 cycles				
Pilot Light (Red, Yellow, White, Green, Blue)	-55…+70 °C (-67…+158 °F)	—	—	4 N•m			
Hole Plug	-55…+70 °C (-67…+158 °F)	—	—	7 N•m			
Illuminated Push Button	-55…+70 °C (-67…+158 °F)	6.7 N (1.5 lb)	1 x 10^6	7 N•m			
Key Selector Switch	-55…+70 °C (-67…+158 °F)	—	1,000,000 cycles	7 N•m			

(1) Excludes contact block.

Specifications — "-Ex" Models (ATEX/IECEx)

ATTENTION: Performance data that is given in this publication is provided only as a guide for you to determine suitability and does not constitute a performance warranty of any kind. Such data may represent the results of accelerated testing at elevated stress levels, and you are responsible for correlating the data to actual application requirements. ALL WARRANTIES AS TO ACTUAL PERFORMANCE, WHETHER EXPRESS OR IMPLIED, ARE EXPRESSLY DISCLAIMED.

Standard Assembled Stations

Table 42 - Mechanical Ratings

Certification	• ATEX (CML 15ATEX3024) • IECEx (IECEx CML 15.0014)	• INMETRO (UL-BR 17.0366) • NEPSI (GYJ17.1200X)
Approvals	RoHS and China RoHS	
Protection Type	II 2 G Ex db eb IIC T6 Gb	II 2 D Ex tb IIIC T80°C Db
Zone Ratings	Zone 1, Zone 2	Zone 21, Zone 22
Operational Temperature Range	-55 °C≤Ta≤+60 °C (-67 °F≤Ta≤+140 °F)	
Ingress Protection (IP)	IP64: Hazardous location installation IP66: Non-hazardous location installation	
Physical Shock Resistance	DIN IEC 68 part 2-27; 30g, 18 ms	
Rated Insulation Voltage, Max	690V (contact block); 300V (power module)	
Rated Maximum Operating Voltage	400V AC or 110V DC (contact block); 250V AC or 60V DC (power module)	
Rated Current	Depends on components that are used and ambient temperature	
Wire/Cable Size	0.75…2.5 mm^2 (18…14 AWG)	
Enclosure Material		
Base and cover	Polypropylene (PP) with glass fiber	
Seals	Foam silicone	
Cable Gland Material		
Plastic Cable Gland	Polyamide (PA) with silicone sealing	
Metal Cable Gland	Brass nickel-plated with silicone sealing	
Cable Gland Sizing		
Plastic Cable Gland	M20 x 1.5 Ø 7…13 mm (Ø 0.28…0.51 in.)	M25 x 1.5 Ø 12…17 mm (Ø 0.47…0.67 in.)
Metal Cable Gland	M20 Ø 12…20 mm (Ø 0.47…0.79 in.) M25 Ø 16…26 mm (Ø 0.63…1.02 in.)	M25 Ø 16…26 mm (Ø 0.63…1.02 in.)

Assembled Stations

Bulletin 800G "-Ex" control stations are designed for Zone 1 and 2, Zone 21 and 22 hazardous location applications. They consist of Bulletin 800G "-Ex" front-of-panel components with "-Ex" back-of-panel components: contact blocks or power modules. Bulletin 800G units are available as factory assembled stations or as components for component replacement. A third party must inspect and certify field assembled stations that are used in Zone 1 and 2, Zone 21 and 22 applications.

Components

Because the back-of-panel components are enclosed in a flame-proof enclosure, they are suitable for use in Zone 1 and Zone 2 Groups IIA, IIB, and IIC hazardous locations as listed within ATEX and IECEx certification. The addition of the panel-mount cover accessory (catalog number 800G-APMC) provides additional dust protection for Zone 21 and 22 Groups IIIA, IIIB, and IIIC hazardous locations as listed within ATEX and IECEx certification.

WARNING: The "-Ex" assembled stations and individual components that are listed on https://ab.rockwellautomation.com/Push-Buttons/Hazardous-Location/800G#selection are not suitable for the use in Zone 0/20, Class I/Division 1 and 2, and Class II/Division 1 and 2 applications. For Class I and II/Division 1 hazardous locations, order Bulletin 800H Type 7 and 9 stations and units.

B_{10D}/ $MTTF_D$/$Lambda_D$ Specifications

See B10D / MTTFD /LambdaD Specifications on page 44.

Contact Blocks

Table 43 - Electrical Ratings

Rated Insulation Voltage (U_i)	690V max.
Utilization Category	AC-15: 400V AC, 10 A; AC-12: 400V AC, 16 A DC-13: 110V DC, 0.5 A; DC-13: 24V DC, 1 A
Minimum Voltage/Current	12V; 4…20 mA
Short Circuit Protection	10 A slow blow, Type DT, gI

Table 44 - Mechanical Ratings

Certifications		• ATEX (CML 17ATEX1107U) • IECEx (IECEx CML 17.0047U) • INMETRO (UL-BR 14.0567U) • NEPSI (GYJ17.1398U)
Approvals		RoHS; China RoHS
Protection Type		II 2 G Ex db eb IIC Gb
Zone Ratings		Zone 1, Zone 2
Operational Temperature Range		-55 °C≤Ta≤+40 °C (-67 °F≤Ta≤+104 °F) @ 16 A -55 °C≤Ta≤+60 °C (-67 °F≤Ta≤+140 °F) @ 11 A
Service Temperature Range (1)		-55 °C≤Ta≤+85 °C (-67 °F≤Ta≤+185 °F)
Ingress Protection (IP)		IP20 (module only), IP64 (module + operator in a hazardous location) (2) IP66 (module + operator in a non-hazardous location) (2)
Wire/Cable Size		0.75…2.5 mm^2 (18…14 AWG)
Material	Housing	Polyamide (PA)
	Contact	AgSnO2
	O-ring	NBR
Physical Shock Resistance		DIN IEC 68 part 2-27; 30 g, 18 ms
Humidity (Noncondensing)		95% at 20 °C (68 °F)
Mechanical Design Life		≥1,000,000 cycles
Typical Operating Force		10 N (2.25 lb·ft) to open N.C. contact; 11 N (2.47 lb·ft) to close N.O. contact 10 N (2.25 lb·ft) full travel 6 mm (0.24 in.) for N.C. contact; 11 N (2.47 lb·ft) full travel 6 mm (0.24 in.) for N.O. contact
Contact Configurations		1 N.O. - 1 N.C.; 2 N.O.; 2 N.C.
Mounting	Base Mount	Secures to NS 35/7.5 DIN Rail
	Panel Mount	Secures to 800G operator with integral bayonet latch

(1) Service temperature range is applicable when used as an individual component within a hazardous location assembly/panel.
(2) Panel mount only.

Power Module

Table 45 - Electrical Ratings

Rated Insulation Voltage (U_i)	300V max
Rated Operating Voltage	12V … 250V AC; 12V … 60V DC
Power Consumption	≤1 W
Current Draw	10.5 mA @12V DC, 13.5 mA @ 60V DC
Electrical Design Life	100,000 hours min.
Multi-LED Illumination Colors	Blue, green, red, white, yellow

Table 46 - Mechanical Ratings

Certifications		• ATEX (CML 17ATEX1108U) • IECEx (IECEx CML 17.0048U) • INMETRO (UL-BR 14.0566U) • NEPSI (GYJ17.1399U)
Approvals		RoHS; China RoHS
Protection Type		II 2 G Ex db eb IIC T6 Gb
Zone Ratings		Zone 1, Zone 2
Operational Temperature Range		-55 °C≤Ta≤+50 °C (-67 °F≤Ta≤+122 °F) -55 °C≤Ta≤+60 °C (-67 °F≤Ta≤+140 °F) if voltage ≤26.4V
Service Temperature Range (1)		-55 °C≤Ta≤+85 °C (-67 °F≤Ta≤+185 °F)
Ingress Protection (IP)		IP20 (module only), IP64 (module + operator in a hazardous location) (2) IP66 (module + operator in a non-hazardous location) (2)
Wire/Cable Size		0.75…2.5 mm² (18…14 AWG)
Material	Housing and Lamp Tube	Polyamide (PA)
	O-ring	NBR
Physical Shock Resistance		DIN IEC 68 part 2…27; 30 g, 18 ms
Humidity (Noncondensing)		95% @ 20 °C (68 °F)
Mounting	Base Mount	Secures to NS 35/7.5 DIN Rail
	Panel Mount	Secures to 800G operator with integral bayonet latch

(1) Service temperature range is applicable when used as an individual component within a hazardous location assembly/panel.
(2) Panel mount only.

Power Module/Contact Block Combination

Table 47 - Electrical Ratings

Rated Insulation Voltage (U_i)	300V max

Table 48 - Mechanical Ratings

Certifications		• ATEX (CML 17ATEX1108U) • IECEx (IECEx CML 17.0048U) • INMETRO (UL-BR 14.0566U) • NEPSI (GYJ17.1399U)
Approvals		RoHS; China RoHS
Protection Type		II 2 G Ex db eb IIC T6 Gb
Zone Ratings		Zone 1, Zone 2
Operational Temperature Range		-55 °C≤Ta≤+50 °C (-67 °F≤Ta≤+122 °F) -55 °C≤Ta≤+60 °C (-67 °F≤Ta≤+140 °F), if voltage ≤26.4V
Service Temperature Range (1)		-55 °C≤Ta≤+85 °C (-67 °F≤Ta≤+185 °F)
Ingress Protection (IP)		IP20 (module only), IP64 (module + operator in a hazardous location) (2) IP66 (module + operator in a non-hazardous location) (2)
Wire/Cable Size		0.75…2.5 mm² (18…14 AWG)
Material	Housing and Lamp Tube	Polyamide (PA)
	Contact	AgSnO2
	O-ring	NBR
Physical Shock Resistance		DIN IEC 68 part 2-27; 30 g, 18 ms
Humidity (Noncondensing)		95% @ 20 °C (68 °F)

(1) Service temperature range is applicable when used as an individual component within a hazardous location assembly/panel.
(2) Panel mount only.

Table 49 - Contact Block Ratings

Utilization Category	AC-15: 230V AC, 1 A; DC-13: 24V DC, 0.25 A
Minimum Current/Voltage	100 mA @ 24V
Short Circuit Protection	10 A Slow Blow, Type DT, gl
Mechanical Design Life	≥100,000 cycles
Electrical Design Life	≥100,000 cycles
Typical Operating Force	10 N (2.25 lb·ft) to open N.C. contact; 11 N (2.47 lb·ft) to close N.O. contact; 10 N (2.25 lb·ft) full travel 6 mm (0.24 in.) for N.C. contact; 11 N (2.47 lb·ft) full travel 6 mm (0.24 in.) for N.O. contact
Contact Configurations	1 N.O.; 1 N.C.

Table 50 - Power Module Ratings

Rated Operating Voltage		12V … 250V AC; 12V … 60V DC
Power Consumption		≤1 W
Current Draw		10.5 mA @ 12V DC; 13.5 mA @ 60V DC, 9.6 mA @12V AC, 36.0 mA @ 250V AC
Electrical Design Life, Min		100,000 hours
Multi-LED Illumination Colors		Blue, green, red, white, yellow
Mounting	Base Mount	Secures to NS 35/7.5 DIN Rail
	Panel Mount	Secures to 800G operator with integral bayonet latch

Front-of-panel Operators

Table 51 - Mechanical Ratings

Device	Operational Temperature	Operating Force (1)	Mechanical Design Life [cycles]	Impact Resistance	Materials	Ingress Protection	Certification and Protection Method
Push Button	-55…+70 °C (-67…+158 °F)	6.7 N (1.5 lb)	200,000	7 N•m	• Housing: Polyamide • Seals: Silicone	IP64(2): -55…+60 °C (-67…+140 °F) IP66(3): -55…+60 °C (-67…+140 °F)	ATEX: CML14 ATEX 3033U IECEx: IECEx CML 14.0014U INMETRO: UL-BR 14.0834U NEPSI: GYJ17.1400U Zone 1 and 2: II 2 G Ex eb IIC Gb Zone 21 and 22: II 2 D Ex tb IIIC Db
Momentary Dual Push Button	-55…+70 °C (-67…+158 °F)	5 N (1.1 lb)	200,000				
Selector Switch	-55…+70 °C (-67…+158 °F)	—	100,000				
Key Release Push Button	-55…+70 °C (-67…+158 °F)	15.6 N (3.5 lb)	100,000				
Key Release Mushroom	-55…+70 °C (-67…+158 °F)	15.6 N (3.5 lb)	100,000				
Momentary Mushroom	-55…+70 °C (-67…+158 °F)	6.7 N (1.5 lb)	200,000				
E-stop	-55…+70 °C (-67…+158 °F)	60 N push/80 N pull (13.5 lb push/18 lb pull)	6000				
Pilot Light (Red, Yellow, White, Green, Blue)	-55…+70 °C (-67…+158 °F)	—	—	4 N•m			
Hole Plug	-55…+70 °C (-67…+158 °F)	—	—	7 N•m			
Illuminated Push Button	-55…+70 °C (-67…+158 °F)	7 N (1.6 lb)	100,000				
Key Selector Switch	-55…+70 °C (-67…+158 °F)	—	100,000				

(1) Excludes contact block.
(2) For hazardous area applications.
(3) For non-hazardous area applications.

Assembled Stations

Complete Assembled Stations

800G	–	2	F	3	M	F	4	N				3	
		a	b	c	d	b	c	d	b	c	d	e	f
			Position 1			Position 2			Position 3				

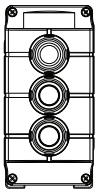

Configurable Ganged Assembled Stations

800G[1]	–	2	2	3	F	A	M	F	B	N			
		a1	a2	a3	b	c	d	b	c	d	b	c	d
		Enclosure Size [2]			Position 1			Position 2			Position 3		

Station 1

P	5	D	E	4	N			
b	c	d	b	c	d	b	c	d
Position 1			Position 2			Position 3		

Station 2

K	3	A	L	6	K	J	M	A	4	
b	c	d	b	c	d	b	c	d	e	f
Position 1			Position 2			Position 3				

Station 3

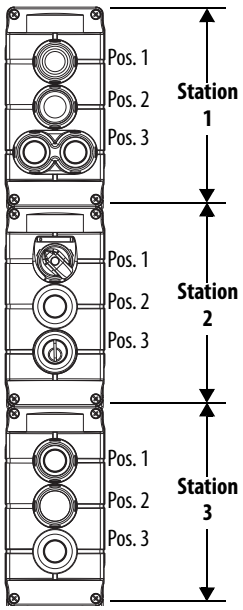

(1) Up to 31 characters after 800G-.
(2) a1 is the enclosure size for station 1, a2 for station 2, and a3 for station 3. If there are two enclosures that are ganged together, leave a3 blank. If there are three enclosures that are ganged together, complete a3 with the appropriate value.

a	
Enclosure Size	
Code	**Description**
1	One-hole
2	Two-hole
3	Three-hole

b			
Operator			
Code	**Description**	**Ratings/ Cert. Code (Table f):**	
		Blank	**-EX**
B	Key release mushroom push button[1]	✓	✓
D	Momentary mushroom push button [2]	✓	✓
E	Push-pull mushroom push button [1]	✓	✓
F	Non-illuminated flush push button [4]	✓	✓
H	Two-position selector switch	✓	✓
J	Three-position selector switch	✓	✓
K	Key release push button	✓	✓
L	Illuminated push button — flush [3]	✓	✓
N	Hole plug [2]	✓	✓

b, continued			
Operator			
Code	**Description**	**Ratings/ Cert. Code (Table f):**	
		Blank	**-EX**
P	Pilot light [3]	✓	✓
R	Two-position key-operated selector switch	—	✓
S	Three-position key-operated selector switch	—	✓
U	Non-illuminated flush dual push button	—	✓
4	Push-pull mushroom push button with locking guard [1]	—	✓
5	Non-illuminated flush push button with locking cover [4]	—	✓
6	Illuminated flush push button with locking cover [3]	—	✓
8	Two-position selector switch with locking cover	—	✓
9	Three-position selector switch with locking cover	—	✓

(1) Only available in red.
(2) Only available in black.
(3) Only available in white, green, red, yellow, and blue.
(4) Not available in blue (6 from Table c on page 53)

c			
Push Button Color/Text			
Code	**Description**	**Ratings/ Cert. Code (Table f):**	
		Blank	**-EX**
1	White	✓	✓
2	Black	✓	✓
3	Green	✓	✓
4	Red	✓	✓
5	Yellow	✓	✓
6	Blue	✓	✓
A	START (green background/white text)	✓	✓
B	STOP (red background/ white text)	✓	✓
C	I (white background/ black text)	✓	✓
D	II (white background/ black text)	✓	✓
E	0 (black background/ white text)	✓	✓
G	I (green background/ white text)	✓	✓
H	O (red background/ white text)	✓	✓
J	ON (green background/ white text)	✓	✓
K	OFF (red background/ white text)	✓	✓
X	Includes multi-color insert packet (1)	—	✓

(1) For ATEX/IECEx dual push button only.
(2) Only available for three-position selector switch.

c, continued			
Push Button Color/Text			
Code	**Description**	**Ratings/ Cert. Code (Table f):**	
		Blank	**-EX**
Key Release			
1	Lockable in initial position, key removal in initial position	✓	✓
		✓	✓
2	Lockable in both positions, key removal in both positions	✓	✓
		✓	✓
3	Lockable in depressed position, key removal in depressed position	✓	✓
		✓	✓
Selector Switch			
M	Maintained in all positions	✓	✓
B	Spring return from both positions (2)	✓	✓
L	Spring return from left (2)	✓	✓
R	Spring return from right (2)	✓	✓
Two-position Key Release Selector Switch			
1	Maintained, key removal left	—	✓
2	Maintained, key removal right	—	✓
3	Maintained, key removal all	—	✓
8	Spring return right, key removal left	—	✓

c, continued			
Push Button Color/Text			
Code	**Description**	**Ratings/ Cert. Code (Table f):**	
		Blank	**-EX**
Three-position Key Release Selector Switch			
1	Maintained, key removal left	—	✓
2	Maintained, key removal right	—	✓
3	Maintained, key removal all	—	✓
4	Maintained, key removal center	—	✓
5	Maintained, key removal left/ center	—	✓
6	Maintained, key removal left/right	—	✓
7	Maintained, key removal right/ center	—	✓
8	Spring return right, key removal left	—	✓
9	Spring return right, key removal center	—	✓
0	Spring return right, key removal left/center	—	✓
A	Spring return left and right, key removal center	—	✓
B	Spring return left, key removal right	—	✓
C	Spring return left, key removal center	—	✓
D	Spring return left, key removal right/center	—	✓

d	
Contact Block/Lamp Module	
Code	**Description**
A	1 N.O. - 1 N.C. base mount (1)
M	2 N.O. base mount (1)
N	2 N.C. base mount (1)
D	Lamp module base mount (same color as requested lens color in Table c on page 53) (2)
X	— (hole plug)
K	1 N.O. with lamp module (3)
L	1 N.C. with lamp module (3)

e			
Conduit Entry			
Code	**Description**	**Ratings/ Cert. Code (Table f):**	
		Blank	**-EX**
Bottom Entry			
Blank	M20X1.5 threaded hole	✓	—
1	1/2 in. NPT conduit hub	✓	—
2	3/4 in. NPT conduit hub	✓	—
3	1 M20 plastic cable gland	—	✓
4	1 M25 plastic cable gland	—	✓
5	M20 blind plug	✓	✓
6	M25 blind plug	✓	✓
7	2 M20 plastic cable gland	—	✓
8	1 M20 metal cable gland	✓	✓
9	1 M25 metal cable gland	✓	✓
Top Entry			
A	M20X1.5 threaded hole	✓	—
B	1/2 in. NPT conduit hub	✓	—
C	3/4 in. NPT conduit hub	✓	—
D	1 M20 plastic cable gland	—	✓
E	1 M25 plastic cable gland	—	✓
F	M20 blind plug	✓	✓
G	M25 blind plug	✓	✓
H	2 M20 plastic cable gland	—	✓
J	1 M20 metal cable gland	✓	✓
K	1 M25 metal cable gland	✓	✓

e, continued			
Conduit Entry			
Code	**Description**	**Ratings/ Cert. Code (Table f):**	
		Blank	**-EX**
Through Feed (4)			
M	M20X1.5 threaded hole	✓	—
N	1/2 in. NPT conduit hub	✓	—
P	3/4 in. NPT conduit hub	✓	—
Q	1 M20 plastic cable gland	—	✓
R	1 M25 plastic cable gland	—	✓
T	M20 blind plug	✓	✓
U	M25 blind plug	✓	✓
V	2 M20 plastic cable gland	—	✓
W	1 M20 metal cable gland	✓	✓
X	1 M25 metal cable gland	✓	✓

f	
Ratings/Certifications	
Code	**Description**
Blank	c-UL-us, Class I Div 2
-EX	ATEX, IECEx Zone 1

(1) For use with non-illuminated operator styles.
(2) For use with pilot light operator style (Code P).
(3) For use with illuminated push button only.
(4) For through-feed enclosure, selected conduit entry is supplied for both bottom and top entry.

Push Button Units

Non-illuminated — Flush

Cat. No. 800G-F-EX

800G – F 3 ____
a b c

a	
Operator Construction	
Code	**Description**
F	Flush operator

b	
Color	
Code	**Description**
c-UL-us Models	
1	White
2	Black
3	Green
4	Red
5	Yellow
"-Ex" Models	
Blank	Multi-color insert packet(1)

c	
Ratings/ Certifications	
Code	**Description**
Blank	c-UL-us, Class I Div 2
-EX	ATEX, IECEx Zone 1

(1) Includes white, black, green, red, and yellow inserts.

Double Push Button, Non-illuminated — Flush

Cat. No. 800G-U2FX-EX

Cat. No. 800G-V2FX-EX

800G – U 2FX ____
a b

a	
Base (1)	
Code	**Description**
U	Curved base for use with Bul. 800G enclosures
V	Flat base for use with customer provided enclosures

b	
Ratings/Certifications	
Code	**Description**
Blank	c-UL-us, Class I Div 2
-EX	ATEX, IECEx Zone 1

(1) Includes black, green, red, yellow, and white color inserts.

Illuminated — Flush

Cat. No. 800G-LF4-EX

800G – LF 3 ____
a b c

a	
Operator Construction	
Code	**Description**
LF	Illuminated flush operator

b	
Color	
Code	**Description**
1	White
3	Green
4	Red
5	Yellow
6	Blue

c	
Ratings/ Certifications	
Code	**Description**
Blank	c-UL-us, Class I Div 2
-EX	ATEX, IECEx Zone 1

Mushroom — Non-illuminated and Key Release

Cat. No. 800G-M2-EX

Cat. No. 800G-MKE-EX

Cat. No. 800G-MPE-EX

Cat. No. 800G-MPE99-EX

800G – M 2 ____
a b c

a	
Operator Style	
Code	**Description**
M	Momentary
MP	Push-pull (1)
MK	Key release (1)

b	
Color/Feature	
Code	**Description**
2	Black with black bezel
E	Red E-stop with yellow bezel and printing on head
E99 (2)	Red E-stop with yellow bezel and no printing on head

(1) Only available in E-stop, code E from Table b.
(2) Only valid with MP operator style.

c	
Ratings/Certifications	
Code	**Description**
Blank	c-UL-us, Class I Div 2
-EX	ATEX, IECEx Zone 1

Key Release

Cat. No. 800G-K16-EX

800G – K 14 ____
a b c

a	
Operator Style	
Code	**Description**
K	Key release push button

b	
Locking Position	
Code	**Description**
14	Lockable in initial position; key removal in initial position
16	Lockable in both positions; key removal in both positions
24	Lockable in depressed position; key removal in depressed position

c	
Ratings/Certifications	
Code	**Description**
Blank	c-UL-us, Class I Div 2
-EX	ATEX, IECEx Zone 1

Selector Switch Units

Knob and Key Operated

Knob Selector Switch (2- pos.)
Cat. No. 800G-SM2-EX

Knob Selector Switch (3-pos.)
Cat. No. 800G-SM3-EX

Key Operated Switch (2-pos.)
Cat. No. 800G-KSM23H-EX

Key Operated Switch (3-pos.)
Cat. No. 800G-KSM33H-EX

Table 52 - Two-position Target Table

Contact Type	↖	↗
N.O.	0	X
N.C.	X	0

Table 53 - Three-position Target Table

Contact Type	Pos. on Latch or Base	↖	↑	↗
N.O.	Top	0	0	X
	Bottom	X	0	0
N.C.	Top	X	X	0
	Bottom	0	X	X

800G – S M3 ____ ____ ____
a b c d e

a	
Operator Style	
Code	**Description**
S	Knob
KS	Key operated

b	
No. of Positions/Functions	
Code	**Description**
M2	Two-position maintained
B3	Three-position spring return left and right to center
L3	Three-position spring return left to center
M3	Three-position maintained
R2	Two-position spring return right to left (3)
R3	Three-position spring return right to center

c	
Key Removal	
Code	**Description**
Blank	For knob selector switches
1	Left (3)
2	Right (3)
3	All (3)
4	Center (3)
5	Left/center (3)
6	Left/right (3)
7	Right/center (3)

d	
Knob Position (1)	
Code	**Description**
Blank	For latch mount or base mount in horizontal Bulletin 800G enclosure (2)
H	For base mount in vertical Bulletin 800G enclosure

e	
Ratings/Certifications	
Code	**Description**
Blank	c-UL-us, Class I Div 2
-EX	ATEX, IECEx Zone 1

(1) See Figure 2.
(2) Only available with knob selector (code S from Table a).
(3) Only available with key selector (code KS from Table a).

Figure 2 - Enclosure Orientation

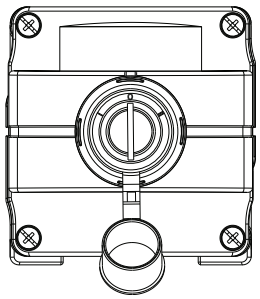

Vertical Enclosure Orientation

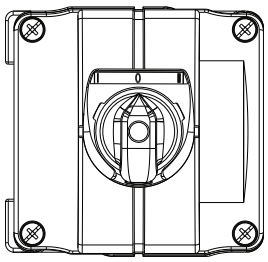

Horizontal Enclosure Orientation

Pilot Lights

Cat. No. 800G-P1-EX

800G	–	P	3	
		a	b	c

a	
Operator Style	
Code	**Description**
P	Pilot light

b	
Lens Color	
Code	**Description**
1	White
3	Green
4	Red
5	Yellow
6	Blue

c	
Ratings/Certifications	
Code	**Description**
Blank	c-UL-us, Class I Div 2
-EX	ATEX, IECEx Zone 1

Plastic Enclosures (c-UL-us Models Only)

IMPORTANT Assembled stations can be field assembled for c-UL-us Class 1/Div 2 and Class 1/Zone 1 applications. They cannot be field assembled for ATEX Zone 1 applications due to restrictions listed within EN60079 series standards.

Base Mount Only
Cat. No. 800G-1P

800G	–	3	P	T	1
		a	b	c	d

a	
Enclosure Size	
Code	**Description**
1	One-hole
2	Two-hole
3	Three-hole

b	
Enclosure Style	
Code	**Description**
P	Plastic

c	
Conduit Entry	
Code	**Description**
Blank	Bottom feed
T	Top feed
F	Through feed
X	No holes

d	
Conduit Style	
Code	**Description**
Blank	M20 x 1.5 threaded hole
1	1/2 in. NPT conduit hub
2	3/4 in. NPT conduit hub
5	M20 blind plug
6	M25 blind plug
8	M20 metal cable gland
9	M25 metal cable gland

Back-of-panel Components

Latch and Base Mount Contact Block

800G	–	XLS	A	
		a	b	c

Base Mount
Cat. No. 800G-XBM-EX

Latch Mount Screw Termination
Cat. No. 800G-XLSA-EX

a	
Contact Block/Latch Type	
Code	Description
XB	Base mount
XLS	Latch mount with screw termination
XLC3 (1)	Latch mount with 3 m (9.84 ft) cable termination

b	
Contact Configuration	
Code	Description
A	1 N.O. - 1 N.C.
M	2 N.O.
N	2 N.C.

c	
Ratings/Certifications	
Code	Description
Blank	c-UL-us, Class I Div 2
-EX	ATEX, IECEx Zone 1

(1) c-UL-us models only.

Latch and Base Mount Power Module

800G	–	DB	G	
		a	b	c

Base Mount
Cat. No. 800G-DBR-EX

Latch Mount Screw Termination
Cat. No. 800G-DLSG-EX

a	
Power Module/Latch Type (1)	
Code	Description
DB	Base mount
DLS	Latch mount with screw termination
DLC3 (2)	Latch mount with 3 m (9.84 ft) cable termination

b	
Color	
Code	Description
W	White
G	Green
R	Red
Y	Yellow
B	Blue

c	
Ratings/Certifications	
Code	Description
Blank	c-UL-us, Class I Div 2
-EX	ATEX, IECEx Zone 1

(1) Bulletin 800G LED modules can only be powered from dry contact circuits (with no leakage current in the OFF state).
(2) c-UL-us models only.

Power Module with Contact Block

800G	–	DB	G	XK	
		a	b	c	d

Base Mount
Cat. No. 800G-DBGXK-EX

Latch Mount
Cat. No. 800G-DLSGXK-EX

IMPORTANT For use with illuminated push button.

a	
Power Module/Latch Type (1)	
Code	Description
DB	DB Base
DLS	Latch mount with screw termination
DLC3 (2)	Latch mount with 3 m (9.84 ft) cable termination

b	
Color	
Code	Description
W	White
G	Green
R	Red
Y	Yellow
B	Blue

c	
Contact Configuration	
Code	Description
XK	1 N.O.
XL	1 N.C.

d	
Ratings/Certifications	
Code	Description
Blank	c-UL-us, Class I Div 2
-EX	ATEX, IECEx Zone 1

(1) Bulletin 800G LED modules can only be powered from dry contact circuits (with no leakage current in the OFF state).
(2) c-UL-us models only.

Accessories

	Description	Pkg Qty	Cat. No.
Cat. No. 800G-ACH2	1/2 in. NPT conduit hub	1	800G-ACH1
	3/4 in. NPT conduit hub	1	800G-ACH2
	M20 plastic cable gland kit (6…12 mm [0.24…0.47 in.]) with earth bracket (1)	1	800G-ACGK1
	M25 plastic cable gland kit (13…18 mm [0.51…0.71 in.]) with earth bracket (1)	1	800G-ACGK3
	M20 metal cable gland kit with earth plate	1	800G-ACGK5
	M25 metal cable gland kit with earth plate	1	800G-ACGK6
	Earth bracket Compatible with plastic cable glands	10	800G-AEB
	Earth plate (1 M20 x 1.5) Compatible with metal cable glands	10	800G-AEP1
	Earth plate (2 M20 x 1.5) Compatible with metal cable glands	10	800G-AEP2
	Earth plate (M25 x 1.5) Compatible with metal cable glands	10	800G-AEP3
	Panel mount cover (2)	1	800G-APMC
	M20 stopping plug (3)	10	800G-AM20P
	M25 stopping plug (3)	10	800G-AM25P
	Mounting nut	10	800G-AMN1

(1) Plastic cable gland kits are compatible with 800G "-EX" solutions only; they cannot be used with c-UL-us solutions for Class I Division 2 hazardous areas since they do not have c-UL-us certification.
(2) Secure to Bulletin 800G "-EX" panel mount back-of-panel components to attain IP67 rating.
(3) When stopping plug is removed from enclosure, you must use a cable gland or conduit hub that maintains all hazardous ratings, temperature ratings, product certifications, and installation requirements for the industrial environment.

	Description	Pkg Qty	Cat. No.
	10-printed push button inserts:		
	Green "START"	10	800G-APC1
	Green "ON"	10	800G-APC2
	Green "I"	10	800G-APC3
	Red "STOP"	10	800G-APC4
	Red "OFF"	10	800G-APC5
	Red "O"	10	800G-APC6
	White "I"	10	800G-APC7
	White "II"	10	800G-APC8
	Black "O"	10	800G-APC9
	Mounting ring wrench	10	800G-AW1
	90 mm (3.54 in.) yellow legend plate for E-stop	10	800G-AEL90
	Yellow E-stop adhesive legend plate	100	800G-AELE
	White color cap insert	10	800G-ACC1
	Black color cap insert	10	800G-ACC2
	Green color cap insert	10	800G-ACC3
	Red color cap insert	10	800G-ACC4
	Yellow color cap insert	10	800G-ACC6
	Contact block and power module ID blank label	10	800G-ACC7
	Flange set for connecting two enclosures (1)		800G-AFS
Cat. No. 800G-ALGB	Locking cover with 30 mm (1.18 in.) hole for securement by bezel Compatible with illuminated and non-illuminated push buttons and selector switches.		800G-ALCB
	Locking guard with 30 mm (1.18 in.) hole for securement by bezel Compatible with E-stop push/pull operators.		800G-ALGB
	Black hole plug		800G-N2

(1) Replacement part for existing Bulletin 800G c-UL-us stations.

Legend Plates

800G	–	11	S	E	166	K
		a	b	c	d	e

a	
Type	
Code	Description
11	Legend plate and frame (1)
17	Legend plate only

b	
Insert Color	
Code	Description
S	Silver background with black legend text

c	
Language	
Code	Description
E	English
F	French
G	German
T	Italian
S	Spanish
U	Universal symbol

(1) Legend frame is not compatible with 800G-M*x* mushroom operators.

d	
Legend Identification	
Code	Description
See https://ab.rockwellautomation.com/Push-Buttons/Hazardous-Location/800G#selection	

e	
Type	
Code	Description
K	0.080 size font

Legend Frame
Cat. No. 800G-110

Adhesive Back Legend Plate
Cat. No. 800G-17SE100

Special Engraving

Besides the standard text and symbols that are listed on https://ab.rockwellautomation.com/Push-Buttons/Hazardous-Location/800G#selection, special legend plates are readily available.
To order:

- Select font code from the following table.
- Specify desired text (see the following table for restrictions on characters and number of lines).

Type of Legend	Size	Font Size	Font Code	Approximate Size	Characters/ Line, Max	Number of Lines, Max	Example	Example (Legend Plate with Frame)
Legend Plate	30 x 4 mm (1.18 x 0.16 in.)	Small	K	SAMPLE	19	1	800G-17SE100K STARTER	800G-11SE100K STARTER

800G	–	AEL	S	LINE 1 ,	LINE 2 ,	LINE 3
		a	b	c	d	e

a	
Insert Color	
Code	Description
AEL	Enclosure identification label with silver background and black text

b	
Font Size	
Code	Description
S	0.10 size font
L	0.14 size font

c, d, e	
Customized Text	
Code	Description
Example of customer specified text that is based on max characters per line and max number of lines. When separated by a comma, the following text is engraved on the next line.	

Adhesive Back Legend Plate
Cat. No. 800G-17SE100

Special Engraving

To order:

- Select font code from the following table.
- Specify desired text (see the following table for restriction on characters and number of lines).

Type of Legend	Size	Font Size	Font Code	Approximate Size	Characters/Line, Max	Number of Lines, Max	Example
Enclosure ID Label	50 x 15 mm (1.97 x 0.59 in.)	Standard	S	SAMPLE	25	3	800G-AELS MACHINE 1, L-R27
		Large	L	SAMPLE	19	2	800G-AELL MACH 1

Markings

Table 54 - Universal

Marking	Suffix Number	Marking	Suffix Number
← – →	U226	I-0-II	U234
↑ – ↓	U227	I-II-III	U240
0	U228	↑	U241
I	U229	←	U242
II	U230	III	U249
I-0	U232	↓	U244
I-II	U233	→	U245
0-1-2	U285	I-0-I	U282

Table 55 - English

Marking	Suffix Number	Marking	Suffix Number
One-word Marking			
AUTO	E101	OFF	E163
CLOSE	E107	ON	E166
DOWN	E110	OPEN	E170
EMERGENCY STOP	E112	OUT	E173
FAULT	E113	POWER ON	E178
FAST	E114	PUSH-TO-TEST	E181
FORWARD	E120	RAISE	E182
HAND	E126	RESET	E186
HIGH	E129	REVERSE	E188
IN	E132	RIGHT	E191
INCH	E134	RUN	E193
JOG	E138	SLOW	E201
LEFT	E145	START	E208
LOW	E148	STOP	E212
LOWER	E152	UP	E223
Two-word Marking			
FOR-REV	E253	LEFT-RIGHT	E146
HAND-AUTO	E127	OFF-ON	E165
HIGH-LOW	E130	OPEN-CLOSE	E171
INCH-REVERSE	E135	RAISE-LOWER	E183
JOG-FOR	E255	SLOW-FAST	E204
JOG-REV	E256	START-STOP	E211
JOG-RUN	E142	UP-DOWN	E224
Three-word Marking			
FOR-STOP-REV	E254	LOW-OFF-HIGH	E150
FOR-OFF-REV	E261	RAISE-OFF-LOWER	E184
HAND-OFF-AUTO	E128	SLOW-OFF-FAST	E205
JOG-STOP-RUN	E144	SLOW-OFF-START	E207
		HAND-0-AUTO	E283

Table 56 - French

Marking	Suffix Number	Marking	Suffix Number
Auto	F101	Monter	F182
Fermer	F107	Arrière	F188
Descendre	F110	Droit	F191
Panne	F113	Régler	F198
Rapide	F114	Lent	F201
Avant	F120	Marche-Arrêt	F211
Avant-Arrêt-Arrière	F122	Hors Circuit	F244
Avant-Arrière	F124	En Circuit	F245
Manuel	F126	Hors	F246
Manuel-Auto	F127	En	F247
Manuel-Arrêt-Auto	F128	Hors-En	F248
Haut	F129	Hors Manuel	F249
Gauche	F145	En Manuel	F250
Bas	F148	Arrêt-Manuel	F251
Bas-Arrêt-Haut	F150	Demar. Man.	F252
Arrêt	F163	Av-Hors-Arr	F253
Arrêt-Marche	F165	Surcharge	F254
Marche	F166	M Forcee	F284
Ouvrir	F170		

Table 57 - German

Marking	Suffix Number	Marking	Suffix Number
Zu	G107	Niedrig	G148
Ab	G110	Niedrig-Aus-Hoch	G150
Störung	G113	Senken	G152
Schnell	G114	Aus	G163
Vor	G120	Aus-Ein	G165
Vor-Aus-Zurück	G122	Ein	G166
Vor-Zurück	G124	Heben	G182
Hand	G126	Zurück	G188
Hand-Auto	G127	Rechts	G191
Hand-Aus-Auto	G128	Langsam	G201
Hoch	G129	Auf	G223
Links	G145	Betrieb	G243

Markings, Continued

Table 58 - Italian

Marking	Suffix Number	Marking	Suffix Number
Automatico	T101	Disinserito	T163
Chiudere	T107	Disins-Ins	T165
Discesa	T110	Inserito	T166
Disturbo	T113	Salita	T182
Rapido	T114	Indietro	T188
Avanti	T120	Destra	T191
Avanti-Disins-Indietro	T122	Preparare	T198
Avanti-Indietro	T124	Lento	T201
Manuale	T126	Marcia	T208
Manuale-Auto	T127	Marcia-Arresto	T211
Manuale-Disins-Auto	T128	Arresto	T212
Alto	T129	Aprire	T223
Sinistra	T145	In Servizio	T243
Basso	T148	Rotazione CW	T246
Basso-Disins-Alto	T150	Rotazione CCW	T247
Abbassare	T152	Emergenza	T248

Table 59 - Spanish

Marking	Suffix Number	Marking	Suffix Number
Cerrar	S107	Abrir	S170
Adelante	S120	Subida	S182
Adelante-Parada-Atrás	S123	Atrás	S188
Adelante-Atrás	S124	Derecha	S191
Manual	S126	Marcha	S208
Manual-Auto	S127	Marcha-Parada	S211
Izquierda	S145	Parada	S212
Bajada	S152	En Servicio	S243

Approximate Dimensions

IMPORTANT Drawings apply to both models (c-UL-us and -Ex) unless otherwise noted.

Dimensions in millimeters (inches). Dimensions are not intended to be used for manufacturing purposes.

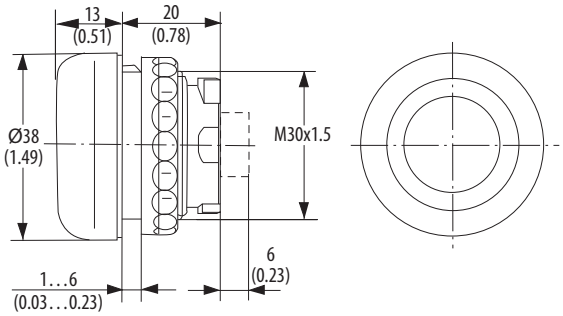

Push Buttons

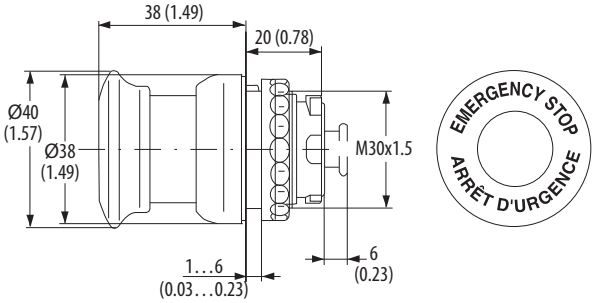

E-stop/Push-pull Mushroom

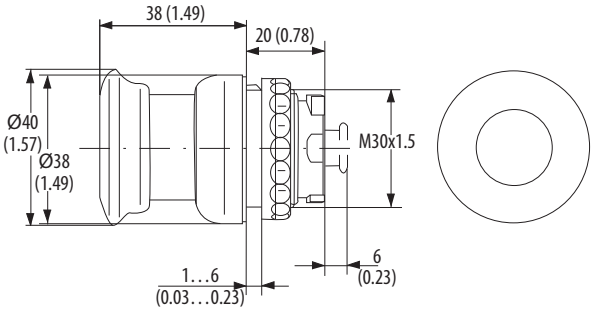

Momentary Mushroom

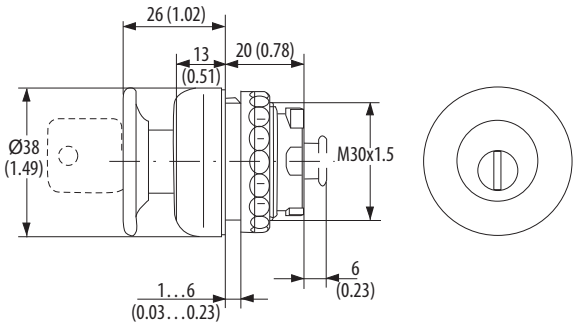

Key Release Mushroom

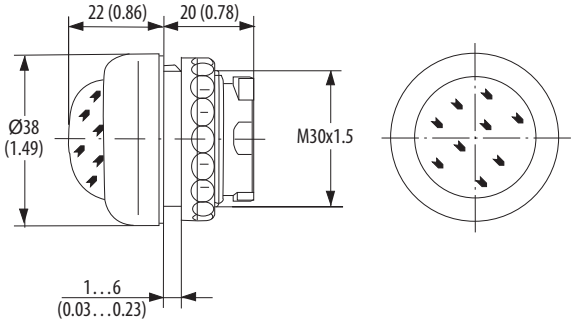

Pilot Light

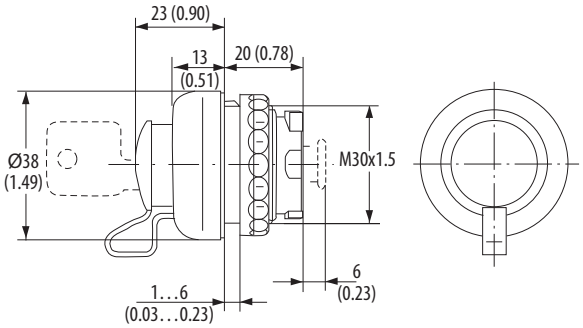

Key Release Push Button

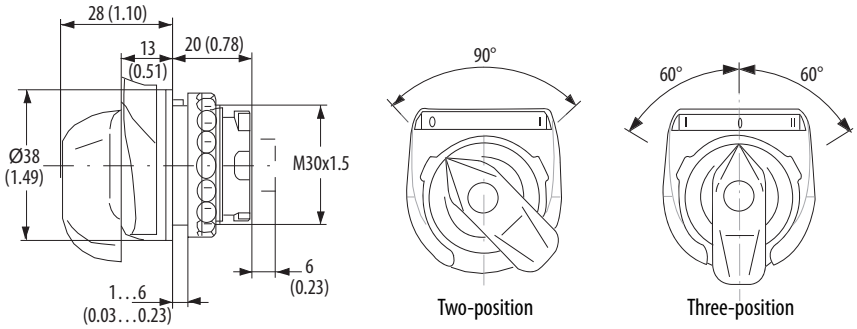

Knob Selector Switch

IMPORTANT Drawings apply to both models (c-UL-us and -Ex) unless otherwise noted.

Dimensions in millimeters (inches). Dimensions are not intended to be used for manufacturing purposes.

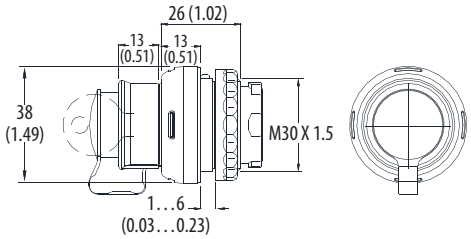

Key Operated Selector Switch

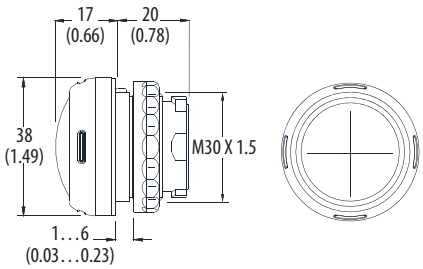

Hole Plug

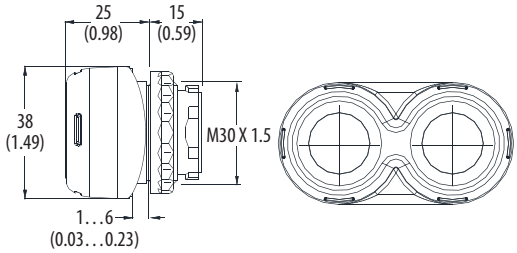

Double Push Button —Curved Base

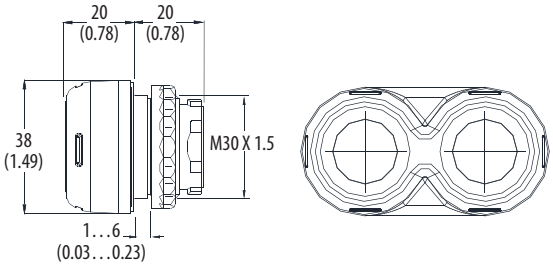

Double Push Button —Flat Base

Contact Block

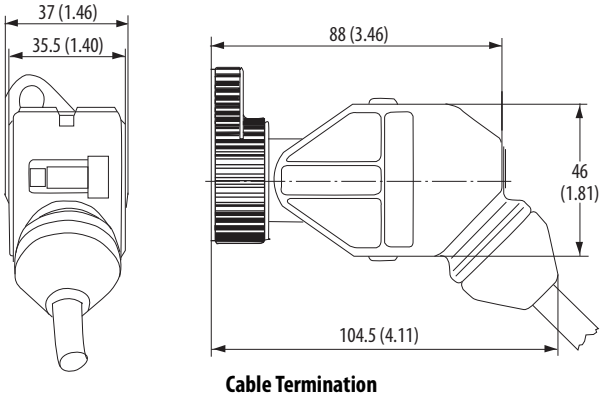

Cable Termination
(c-UL-us models only)

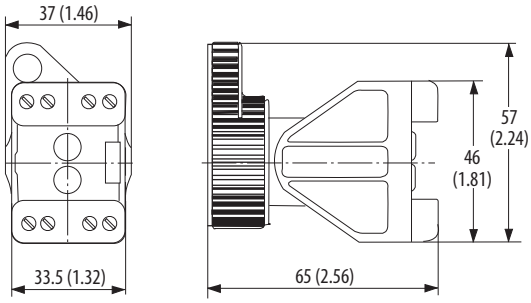

Screw Termination
(c-UL-us models only)

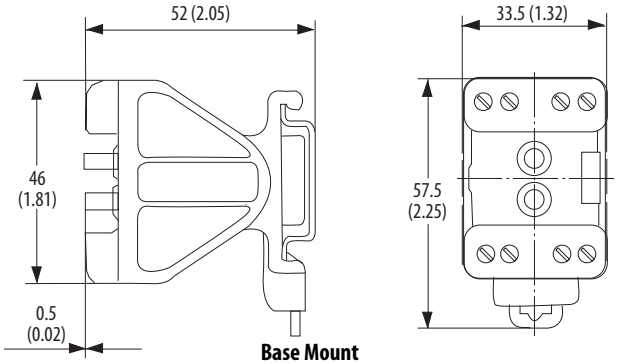

Base Mount

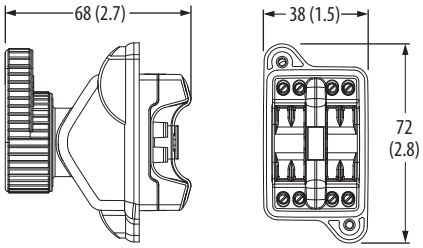

Screw Termination
(-Ex models only)

Power Module

IMPORTANT Drawings apply to both models (c-UL-us and -Ex) unless otherwise noted.

Dimensions in millimeters (inches). Dimensions are not intended to be used for manufacturing purposes.

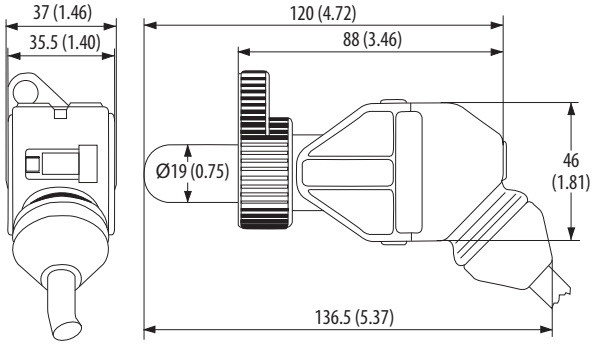

Cable Termination
(c-UL-us models only)

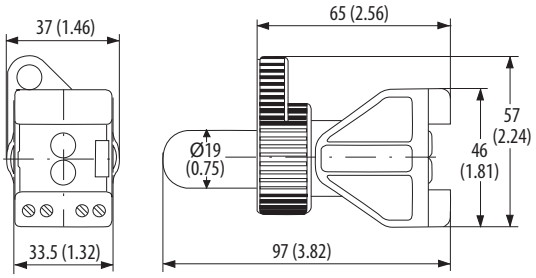

Screw Termination
(c-UL-us models only)

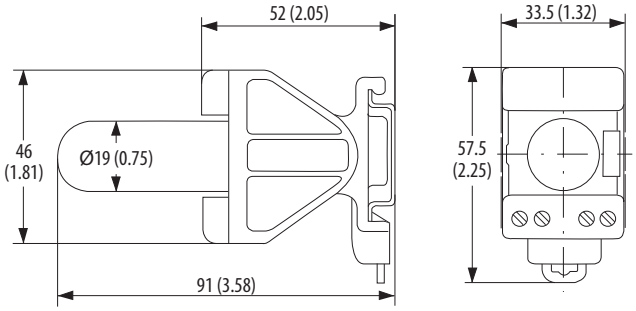

Base Mount

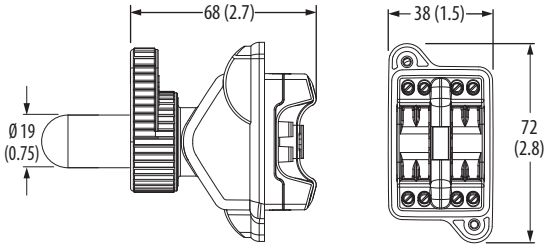

Screw Termination
(-Ex models only)

Power Module with Contact Block

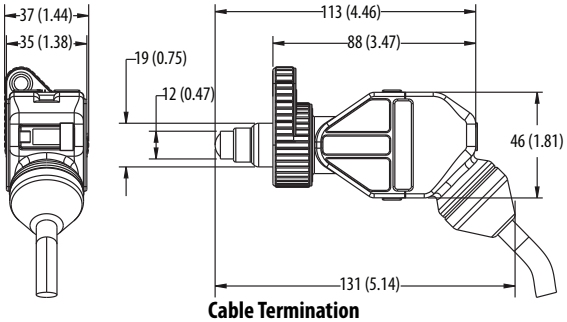

Cable Termination
(c-UL-us models only)

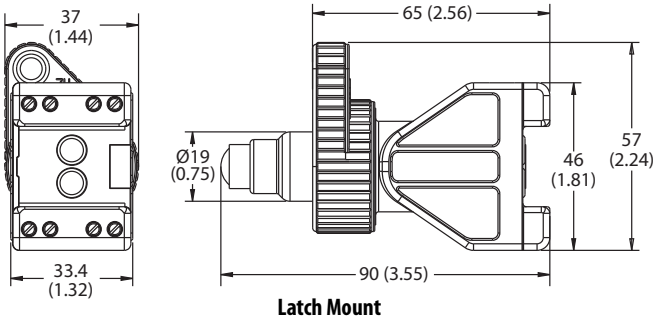

Latch Mount
(c-UL-us models only)

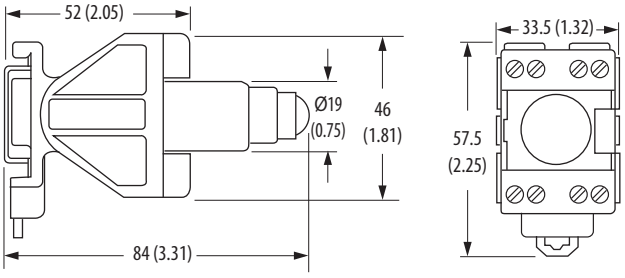

Base Mount

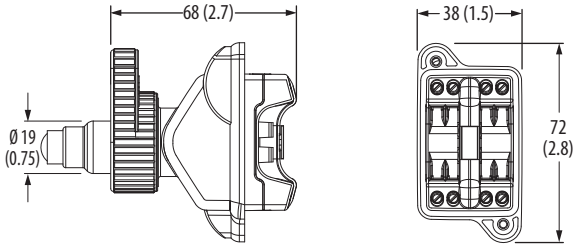

Screw Termination
(-Ex models only)

Panel Mount Cover

IMPORTANT Drawings apply to both models (c-UL-us and -Ex) unless otherwise noted.

Dimensions in millimeters (inches). Dimensions are not intended to be used for manufacturing purposes.

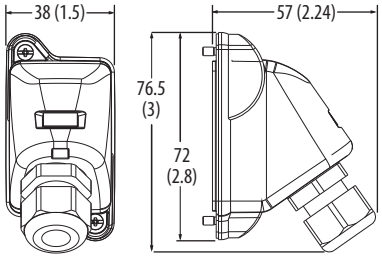

Panel Mount Cover
(-Ex models only)

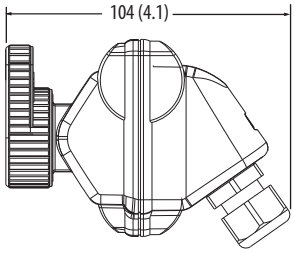

Panel Mount Cover and Panel Mount Contact Block
(-Ex models only)

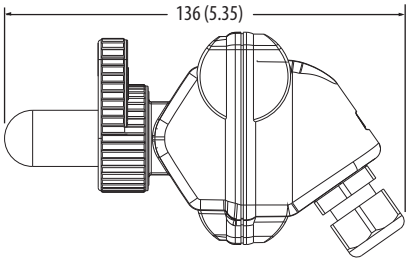

Panel Mount Cover and Panel Mount Power Module
(-Ex models only)

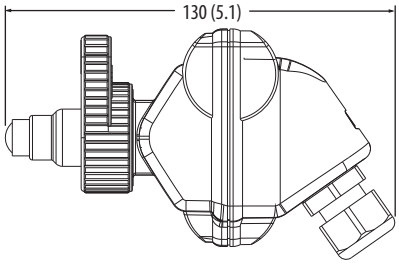

Panel Mount Cover and Panel Mount Power Module with Contact Block
(-Ex models only)

Enclosures

IMPORTANT Drawings apply to both models (c-UL-us and -Ex) unless otherwise noted.

Dimensions in millimeters (inches). Dimensions are not intended to be used for manufacturing purposes.

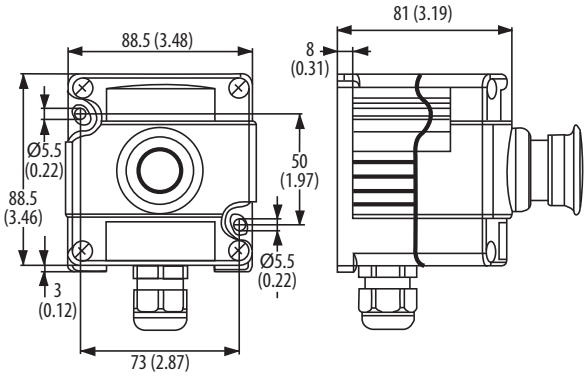

Single Unit
(c-UL-us models only)

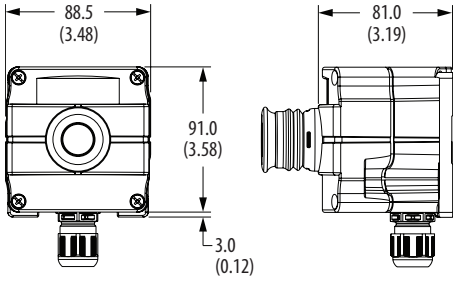

Single Unit
(-Ex models only)

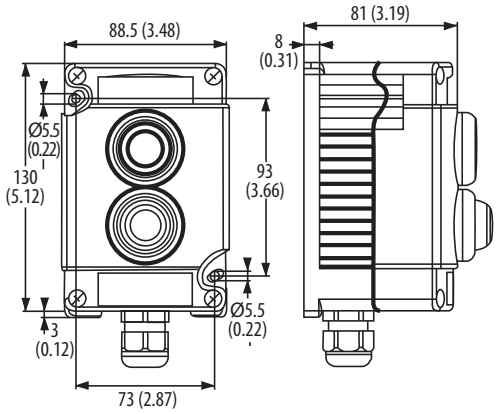

Double Unit
(c-UL-us models only)

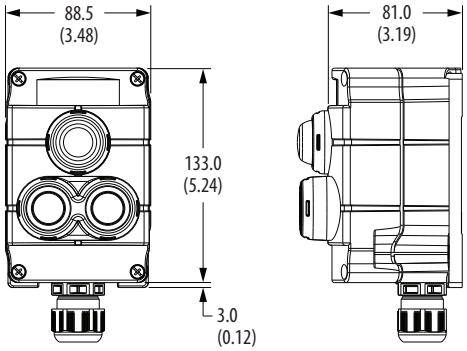

Double Unit
(-Ex models only)

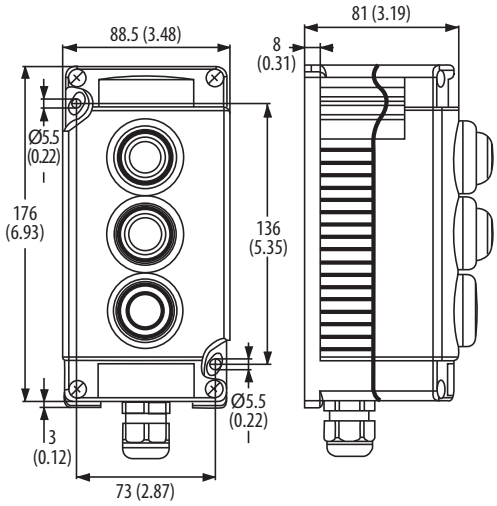

Triple Unit
(c-UL-us models only)

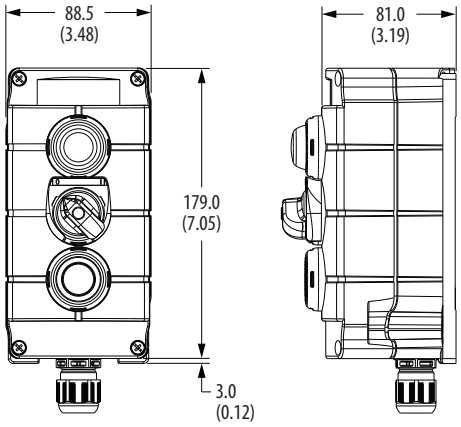

Triple Unit
(-Ex models only)

Enclosure Spacing and Mounting

IMPORTANT Drawings apply to both models (c-UL-us and -Ex) unless otherwise noted.

Dimensions in millimeters (inches). Dimensions are not intended to be used for manufacturing purposes.

Vertical and Horizontal Spacing

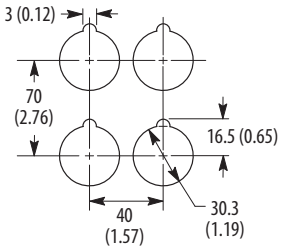

Mounting Dimension

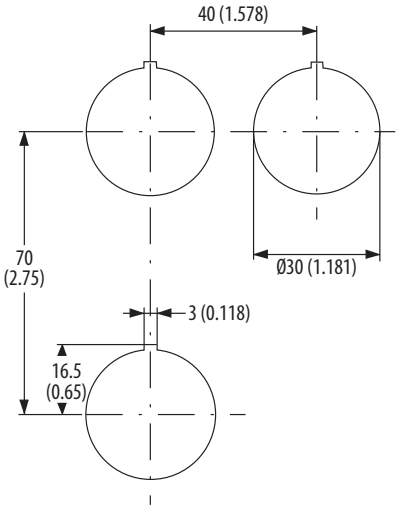

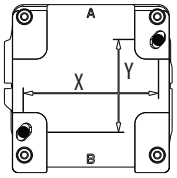

Single Unit

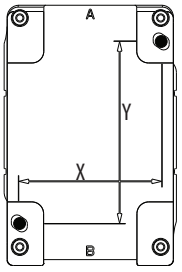

Double Unit

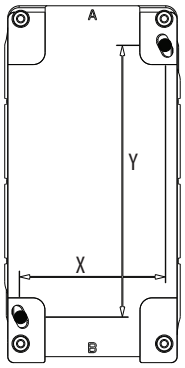

Triple Unit

Units	Hole Diameter [mm (in.)]	X (Width) [mm (in.)]	Y (Height) [mm (in.)]
Single	5.5 (7/32)	73 (2-7/8)	50 (1-31/32)
Double			93 (3-21/32)
Triple			136 (5-23/64)

Notes:

Additional Resources

These documents contain additional information concerning related products from Rockwell Automation.

Resource	Description
30 mm Push Button Specifications Technical Data, publication 800-TD009	Provides specification information for Bulletin 800T/H push button products.
Industrial Automation Wiring and Grounding Guidelines, publication 1770-4.1	Provides general guidelines for installing a Rockwell Automation industrial system.
Product Certifications website, rok.auto/certifications	Provides declarations of conformity, certificates, and other certification details.

You can view or download publications at http://www.rockwellautomation.com/global/literature-library/overview.page.

Rockwell Automation Support

Use the following resources to access support information.

Technical Support Center	Knowledgebase Articles, How-to Videos, FAQs, Chat, User Forums, and Product Notification Updates.	www.rockwellautomation.com/knowledgebase
Local Technical Support Phone Numbers	Locate the phone number for your country.	www.rockwellautomation.com/global/support/get-support-now.page
Direct Dial Codes	Find the Direct Dial Code for your product. Use the code to route your call directly to a technical support engineer.	www.rockwellautomation.com/global/support/direct-dial.page
Literature Library	Installation Instructions, Manuals, Brochures, and Technical Data.	www.rockwellautomation.com/literature
Product Compatibility and Download Center (PCDC)	Get help determining how products interact, check features and capabilities, and find associated firmware.	www.rockwellautomation.com/global/support/pcdc.page

Documentation Feedback

Your comments will help us serve your documentation needs better. If you have any suggestions on how to improve this document, complete the How Are We Doing? form at http://literature.rockwellautomation.com/idc/groups/literature/documents/du/ra-du002_-en-e.pdf.

Rockwell Automation maintains current product environmental information on its website at http://www.rockwellautomation.com/rockwellautomation/about-us/sustainability-ethics/product-environmental-compliance.page.

Allen-Bradley, PenTUFF, Rockwell Automation, Rockwell Software, and LISTEN. THINK. SOLVE. are trademarks of Rockwell Automation, Inc.
Trademarks not belonging to Rockwell Automation are property of their respective companies.

Rockwell Otomasyon Ticaret A.Ş., Kar Plaza İş Merkezi E Blok Kat:6 34752 İçerenköy, İstanbul, Tel: +90 (216) 5698400

www.rockwellautomation.com

Power, Control and Information Solutions Headquarters

Americas: Rockwell Automation, 1201 South Second Street, Milwaukee, WI 53204-2496 USA, Tel: (1) 414.382.2000, Fax: (1) 414.382.4444
Europe/Middle East/Africa: Rockwell Automation NV, Pegasus Park, De Kleetlaan 12a, 1831 Diegem, Belgium, Tel: (32) 2 663 0600, Fax: (32) 2 663 0640
Asia Pacific: Rockwell Automation, Level 14, Core F, Cyberport 3, 100 Cyberport Road, Hong Kong, Tel: (852) 2887 4788, Fax: (852) 2508 1846

Publication 800-TD011F-EN-P - August 2019
Supersedes Publication 800-TD011E-EN-P - May 2019

Copyright © 2019 Rockwell Automation, Inc. All rights reserved. Printed in the U.S.A.