Technical Data

Allen-Bradley

Eutectic Alloy Overload Relay Specifications

Bulletin 592

Topic	Page
Product Overview	1
Product Selection	2
Specifications	2
Approximate Dimensions	3

Product Overview

The Bulletin 592 Overload Relay is a manual reset, eutectic alloy, thermal type overload device. When coordinated with the proper short circuit protection, the overload relay is intended to protect the motor, motor controller, and power wiring against overheating due to excessive overcurrents.

All Bulletin 592 block type relays are furnished with an optical indicator that becomes visible when the relay has tripped. A manual contact test module is provided as standard on block type Bulletin 592 overload relays. One N.O. or N.C. auxiliary contact may be field added to block type Bulletin 592 overload relays. This extra contact module physically replaces the contact test module.

LISTEN.
THINK.
SOLVE.®

Allen-Bradley • Rockwell Software

Rockwell Automation

Allen Bradley 592-COV169 | gesrepair.com

Product Selection

The tables in this section list selection information for the 592 Overload relay. These overload relays require heater elements. See publication 592-TD010 for heater element selection information.

Eutectic Alloy Type—Manual Reset, Starter Mount

- for installation on Bul. 500 NEMA contactors
- requires three heater elements

NEMA Starter Size	No. of Poles	Open Type (without enclosure)	
		N.C. Contact	N.O. -N.C. Contact
		Cat. No.	Cat. No.
00 (Series B and D)	3	592-J0V16	592-J0V169
0, 1		592-EUTB	592-B0W169
2		592-EUTC	592-C0W169
3		592-EUTD	592-D0W169
4		592-EUTE	592-E0W169

Eutectic Alloy Type—Manual Reset, Panel Mount

- for installation and wiring separate from contactor
- requires one or three heater elements

Type	Max. Continuous Current [A]	No. of Poles	Open Type (without enclosure)		Type 1 General-purpose Enclosure	
			N.C. Contact	N.O. -N.C. Contact	N.C. Contact	N.O. -N.C. Contact
			Cat. No.	Cat. No.	Cat. No.	Cat. No.
Compact	24	3	592-J0V16	592-J0V169	—	—
	32	3	592-K0V16	592-K0V169	—	—
Standard	40	1	592-B0V4	592-B0V49	—	—
		3	592-B0V16	592-B0V169	592-BAV16	592-BAV169
	62	1	592-C0V4	592-C0V49	—	—
		3	592-C0V16	592-C0V169	592-CAV16	592-CAV169
	125	3	592-D0V16	592-D0V169	—	—
	165	3	592-E0V16	592-E0V169	—	—

Current Transformer Type—Eutectic Alloy, Manual Reset

- requires three heater elements

Full Load Current Range [A]	Cat. No.(1)	Lug Kit Cat. No.
60…200(2)	592-J0V16	199-LF1
120…300(2)	592-EUTB	199-LG1
160…496	592-EUTC	199-LH1
250…630(2)	592-EUTD	199-LJ1

(1) Terminal lugs are not included.
(2) Can be applied up to 1500V.

Specifications

Standards Compliance and Certifications

Standards Compliance	Certifications
UL 508	UL Listed (file No. E14840, Guide No. NKCR)
CSA22.2, No. 14	CSA Certified (File No. LR1234)

Approximate Dimensions

Dimensions are shown in inches (millimeters). Dimensions are not to be used for manufacturing purposes.

Figure 1 - Open Type without Enclosure for Bulletin 592 Eutectic Alloy Type — Manual Reset — Panel Mount

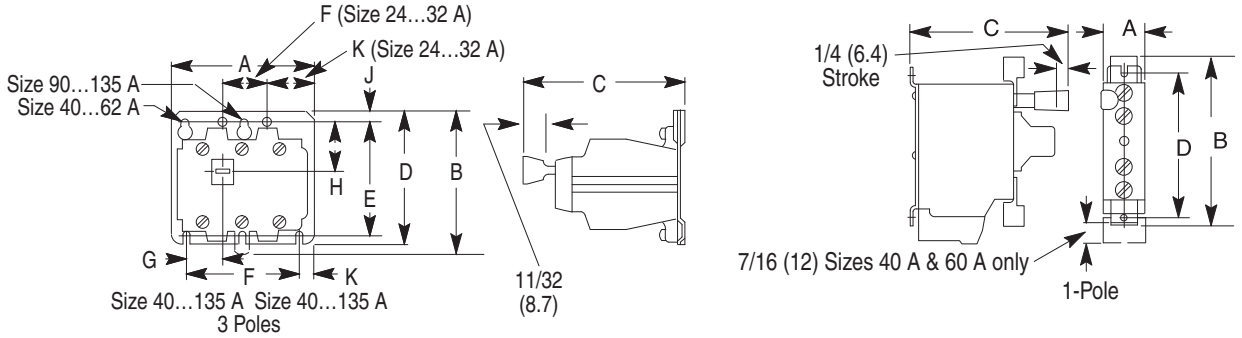

Maximum Current [A]	No. of Poles	A Wide	B High	C Deep	D	E	F	G	H	J	K
24/32	3	2-11/16 (68.3)	3-1/4 (82.6)	3-41/64 (92.6)	—	2-3/4 (70)	55/64 (22)	—	—	1/4 (6.4)	29/32 (23)
40	1	7/8 (22.2)	3-1/4 (82.6)	3-9/16 (90.5)	2-29/32 (73.8)	—	-—	—	—	—	—
	3	3-15/16 (100)	—	4-1/2 (114)	3-21/32 (93)	3-5/32 (80)	3-5/32 (80)	1-3/64 (26.5)	1-3/8 (35)	1-9/64 (7.5)	25/64 (9.9)
62	1	7/8 (22.2)	3-13/16 (96.8)	3-9/16 (90.5)	3-1/8 (79.4)	—	—	—	—	—	—
	3	3-15/16 (100)	3-31/32 (101)	4-1/2 (114)	3-21/32 (93)	3-5/32 (80)	3-5/32 (80)	1-3/64 (26.5)	1-3/8 (35)	1-9/64 (7.5)	25/64 (9.9)
125	3	6-7/32 (158)	5-7/8 (149)	4-49/64 (121)	6-1/4 (159)	5-1/2 (140)	5-1/2 (140)	1-61/64 (49.6)	2-3/4 (69.8)	5/16 (7.9)	23/64 (9.1)
165	3	6-7/32 (158)	6-17/32 (166)	4-49/64 (121)	6-1/4 (159)	5-1/2 (140)	5-1/2 (140)	1-61/64 (49.6)	2-3/4 (69.8)	5/16 (7.9)	23/64 (9.1)

Figure 2 - Open Type without Enclosure for Bulletin 592 Current Transformer Type — Eutectic Alloy, Manual Reset

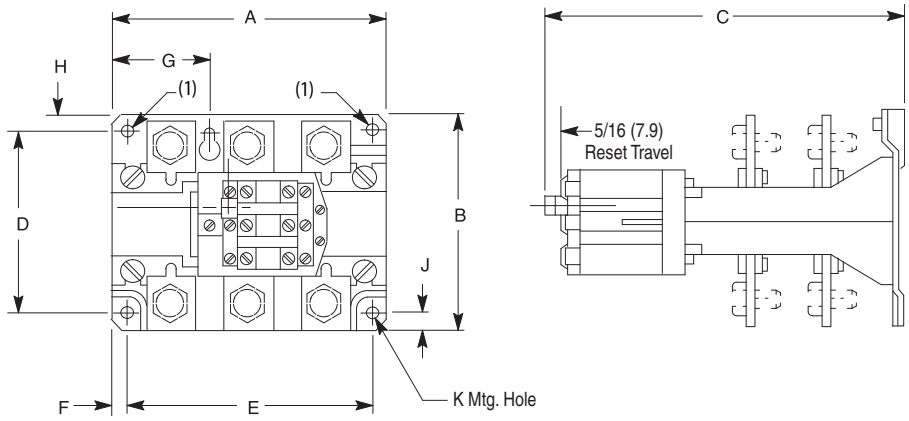

(1) Mounting holes for Cat. Nos. 592-TPD400 and 592-TPD630 only.

Cat. No.	A Wide	B High	C Deep	D	E	F	G	H	J	K
592-TPD200	5-5/16 (135)	5-19/32 (142)	8-9/16 (217.5)	4-23/32 (120)	4-23/32 (120)	19/64 (7.5)	1-59/64 (49)	29/64 (12)	51/64 (10)	21/64 (8.4)
592-TPD300	6-63/64 (177.3)	5-19/32 (142)	9-5/32 (233)	4-23/32 (120)	6-9/64 (156)	27/64 (10.6)	22-1/2 (63.6)	29/64 (12)	51/64 (10)	9/32 (7)
592-TPD400	6-63/64 (177.3)	10-15/32 (266)	9-5/32 (233)	4-23/32 (120)	6-9/64 (156)	27/64 (10.6)	22-1/2 (63.6)	29/64 (12)	51/64 (10)	9/32 (7)
592-TPD630	9-27/32 (250)	7-55/64 (210)	8-19/32 (218)	7-3/32 (180)	8-57/64 (226)	15/32 (12)	3-19/64 (84)	25/64 (10)	51/64 (10)	9/32 (7)

Figure 3 - Type 1 General Purpose Enclosure for Bulletin 592

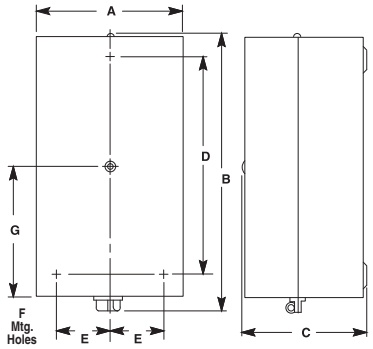

Maximum Current [A]	A Wide	B High	C Deep	D	E	F	G
40…60	6-13/16 (173)	10-5/8 (270)	5-23/32 (145)	8-1/4 (210)	2-3/8 (60.5)	7/32 (5.5)	5-5/16 (135)

Additional Resources

These documents contain additional information concerning related products from Rockwell Automation.

Resource	Description
Heater Element Specifications, publication 592-TD010	Provides selection information for heater elements.
Industrial Automation Wiring and Grounding Guidelines, publication 1770-4.1	Provides general guidelines for installing a Rockwell Automation industrial system.
Product Certifications website, http://www.rockwellautomation.com/global/certification/overview.page	Provides declarations of conformity, certificates, and other certification details.

You can view or download publications at http://www.rockwellautomation.com/global/literature-library/overview.page. To order paper copies of technical documentation, contact your local Allen-Bradley distributor or Rockwell Automation sales representative.

Rockwell Automation Support

Use the following resources to access support information.

Technical Support Center	Knowledgebase Articles, How-to Videos, FAQs, Chat, User Forums, and Product Notification Updates.	www.rockwellautomation.com/knowledgebase
Local Technical Support Phone Numbers	Locate the phone number for your country.	www.rockwellautomation.com/global/support/get-support-now.page
Direct Dial Codes	Find the Direct Dial Code for your product. Use the code to route your call directly to a technical support engineer.	www.rockwellautomation.com/global/support/direct-dial.page
Literature Library	Installation Instructions, Manuals, Brochures, and Technical Data.	www.rockwellautomation.com/literature
Product Compatibility and Download Center (PCDC)	Get help determining how products interact, check features and capabilities, and find associated firmware.	www.rockwellautomation.com/global/support/pcdc.page

Documentation Feedback

Your comments will help us serve your documentation needs better. If you have any suggestions on how to improve this document, complete the How Are We Doing? form at http://literature.rockwellautomation.com/idc/groups/literature/documents/du/ra-du002_-en-e.pdf.

Rockwell Automation maintains current product environmental information on its website at http://www.rockwellautomation.com/rockwellautomation/about-us/sustainability-ethics/product-environmental-compliance.page.

Allen-Bradley, LISTEN. THINK. SOLVE, and Rockwell Automation are trademarks of Rockwell Automation, Inc.
Trademarks not belonging to Rockwell Automation are property of their respective companies.

Rockwell Otomasyon Ticaret A.Ş., Kar Plaza İş Merkezi E Blok Kat:6 34752 İçerenköy, İstanbul, Tel: +90 (216) 5698400

www.rockwellautomation.com

Power, Control and Information Solutions Headquarters

Americas: Rockwell Automation, 1201 South Second Street, Milwaukee, WI 53204-2496 USA, Tel: (1) 414.382.2000, Fax: (1) 414.382.4444
Europe/Middle East/Africa: Rockwell Automation NV, Pegasus Park, De Kleetlaan 12a, 1831 Diegem, Belgium, Tel: (32) 2 663 0600, Fax: (32) 2 663 0640
Asia Pacific: Rockwell Automation, Level 14, Core F, Cyberport 3, 100 Cyberport Road, Hong Kong, Tel: (852) 2887 4788, Fax: (852) 2508 1846

Publication 592-TD009B-EN-P - August 2018
Supersedes Publication 592-TD009A-EN-P August 2014

Copyright © 2018 Rockwell Automation, Inc. All rights reserved. Printed in the U.S.A.