User Manual

Allen-Bradley

ArmorStart Distributed Motor Controller with EtherNet/IP

Catalog Numbers 280E, 281E, 284E









Allen-Bradley • Rockwell Software

Rockwell Automation

Allen Bradley 284E-FVD6P0Z-25-CRW | gesrepair.com

Important User Information

Read this document and the documents listed in the additional resources section about installation, configuration, and operation of this equipment before you install, configure, operate, or maintain this product. Users are required to familiarize themselves with installation and wiring instructions in addition to requirements of all applicable codes, laws, and standards.

Activities including installation, adjustments, putting into service, use, assembly, disassembly, and maintenance are required to be carried out by suitably trained personnel in accordance with applicable code of practice.

If this equipment is used in a manner not specified by the manufacturer, the protection provided by the equipment may be impaired.

In no event will Rockwell Automation, Inc. be responsible or liable for indirect or consequential damages resulting from the use or application of this equipment.

The examples and diagrams in this manual are included solely for illustrative purposes. Because of the many variables and requirements associated with any particular installation, Rockwell Automation, Inc. cannot assume responsibility or liability for actual use based on the examples and diagrams.

No patent liability is assumed by Rockwell Automation, Inc. with respect to use of information, circuits, equipment, or software described in this manual.

Reproduction of the contents of this manual, in whole or in part, without written permission of Rockwell Automation, Inc., is prohibited.

Throughout this manual, when necessary, we use notes to make you aware of safety considerations.

	**WARNING:** Identifies information about practices or circumstances that can cause an explosion in a hazardous environment, which may lead to personal injury or death, property damage, or economic loss.
	**ATTENTION:** Identifies information about practices or circumstances that can lead to personal injury or death, property damage, or economic loss. Attentions help you identify a hazard, avoid a hazard, and recognize the consequence.
IMPORTANT	Identifies information that is critical for successful application and understanding of the product.

Labels may also be on or inside the equipment to provide specific precautions.

	**SHOCK HAZARD:** Labels may be on or inside the equipment, for example, a drive or motor, to alert people that dangerous voltage may be present.
	**BURN HAZARD:** Labels may be on or inside the equipment, for example, a drive or motor, to alert people that surfaces may reach dangerous temperatures.
	**ARC FLASH HAZARD:** Labels may be on or inside the equipment, for example, a motor control center, to alert people to potential Arc Flash. Arc Flash will cause severe injury or death. Wear proper Personal Protective Equipment (PPE). Follow ALL Regulatory requirements for safe work practices and for Personal Protective Equipment (PPE).

Allen-Bradley, ArmorConnect, ArmorStart, ControlLogix, DeviceLogix, On-Machine, PowerFlex, RSLinx, RSLogix 5000, RSNetWorx, and StepLogic are trademarks of Rockwell Automation, Inc.
Trademarks not belonging to Rockwell Automation are property of their respective companies.

Trademarks not belonging to Rockwell Automation are property of their respective companies.

European Communities (EC) Directive Compliance

If this product has the CE mark it is approved for installation within the European Union and EEA regions. It has been designed and tested to meet the following directives.

Low Voltage and EMC Directives

This product is tested to meet Council Directive 2006/95/EC Low Voltage Directive and Council Directive 2004/108/EC Electromagnetic Compatibility (EMC) by applying the following standard(s):

- Bulletin 280E/281E: EN 60947-4-1 — Low-voltage switchgear and controlgear — Part 4-1: Contactors and motor-starters — Electromechanical contactors and motor-starters.
- Bulletin 284E: EN 61800-5-1 — Adjustable speed electronic power drive systems — Part 5-1: Safety requirements — Electrical, thermal and energy.
- Bulletin 284E: EN 61800-3 — Adjustable speed electronic power drive systems — Part 3: EMC product standard including specific test methods.

This product is intended for use in an industrial environment.

Notes:

European Communities (EC) Directive Compliance . . . 3
Low Voltage and EMC Directives . . . 3

Chapter 1

Product Overview

Introduction . . . 16
Description . . . 16
Catalog Number Explanation . . . 17
Operation . . . 18
Mode of Operation . . . 19
Bulletin 280E, 281E . . . 19
Full-Voltage Start . . . 19
Bulletin 284E . . . 19
Sensorless Vector Control . . . 19
Description of Features . . . 20
Overload Protection . . . 20
Embedded Switch Technology . . . 20
Switched vs. Unswitched Control Power Input/Output (I/O) Connections . . . 21
EtherNet/IP Ports . . . 21
Embedded Web Server . . . 21
E-mail Notification Configuration . . . 22
EtherNet/IP LED Status Indication . . . 22
Control Module LED Status and Reset . . . 22
Electronic Data Sheet (EDS) . . . 23
Fault Diagnostics . . . 23
Protection Faults . . . 23
Standard Features . . . 24
Inputs . . . 24
Outputs . . . 24
Gland Plate Entrance . . . 24
Motor Cable . . . 24
DeviceLogix . . . 24
Factory-Installed Options . . . 25
Optional HOA Keypad Configuration (Bulletin 280E, 281E only) . . . 25
Optional HOA Selector Keypad with Jog Function (Bulletin 284E only) . . . 25
Source Brake Contactor and Connector (Bulletin 284E only) . . . 25
EMI Filter (Bulletin 284E only) . . . 25
Dynamic Brake Connector (Bulletin 284E only) . . . 26
IP67 Dynamic Brake Resistor (Bulletin 284E only) . . . 26
Output Contactor (Bulletin 284E only) . . . 26
Shielded Motor Cable (Bulletin 284E only) . . . 26
ArmorStart EtherNet/IP Features . . . 27

Installation, Wiring, and Maintenance

Chapter 2

Receiving 29
Unpacking 29
Inspecting 29
Storing 29
General Precautions 30
Precautions for Bulletin 284E Applications 30
Dimensions 31
- 280E, 281E Conduit Gland Entrance Bulletin 31
- 280E, 281E Daisy Chain (DR) Conduit Entrance 32
- 284E Conduit Gland Entrance Bulletin 33
- 284E Daisy Chain (DR) Conduit Entrance 34
- 280E, 281E ArmorConnect Gland Connectivity Bulletin 35
- 284E ArmorConnect Gland Connectivity Bulletin 36

Mount Orientation 37
Operation 37
Wiring 38
- Power, Control, and Ground Wiring 38
- Standard Conduit/Knockout Size 38

Terminal Designations 39
Control Power Wiring 40
- 24V DC Control Power 40

ArmorStart with EtherNet/IP Internal Wiring 41
- Recommended Cord Grips 44

AC Supply Considerations for Bulletin 284E Units 45
- Ungrounded and High Resistive Distribution Systems 45
- Disconnecting MOVs 45

Group Motor Installations for USA and Canada Markets 46
Wiring and Workmanship Guidelines 46
- Other System Design Considerations 48

Electromagnetic Compatibility (EMC) 48
- General Notes (Bulletin 284E only) 48
- Wiring 48

Grounding 49
- Grounding Safety Grounds 49
- Grounding PE or Ground 50

Shield and Grounding of Motors and Motor Cables 50
- Motor Cable Considerations 50
- Unshielded Cable 50
- Shielded Cable 51
- Shield Terminating Connectors 52

ArmorConnect Power Media 52
- Description 52

ArmorConnect Connections 55
- Control Power Overview Using 6/5 Pin Control 55
- Control Power using 4-Pin Auxiliary Power Tee Adapter 57

ArmorConnect Cable Ratings 58

Branch Circuit Protection Requirements for ArmorConnect Three-Phase Power Media 58
Ethernet and I/O Connections 60
Power Connections 61
Optional Locking Clip 63
Maintenance 64

Chapter 3

Introduction to EtherNet/IP and Device Level Ring Technology

Terminology 65
Introduction to EtherNet/IP 67
Linear Network Introduction 70
Device Level Ring 71
Introduction 71
Number of Nodes on a DLR Network 73
Ethernet Switches 73
Ethernet Media 73
EtherNet/IP General Wiring Guideline 74
Requested Packet Interval 74

Chapter 4

Product Commissioning

IP Address 77
Gateway Address 78
Subnet Mask 78
Configuring EtherNet/IP Address 78
Manually Configure the Network Address Switches 79
Use the Rockwell Automation BootP/DHCP Utility 81
Save the Relation List 83
DHCP IP Support 84
Using the Rockwell Automation Embedded Web Server 85
Internal Web Server 85
Network Configuration 87
Parameter Configuration 88
E-mail Notification Configuration 89
Device Connections 90
Ownership 91
Ethernet Statistics Web Page 92
Connection Manager Cmd Object Info Web Page 93
Ring Statistics Web Page 94

Chapter 5

Adding an ArmorStart to RSLogix 5000

Setup 95
Connect and Configure ArmorStart with Add-On-Profile (AOP) . . . 98
Offline Connection 99
General Tab 99
Connection Tab 100
Parameters Tab 101

Online Connection 102
Parameters Tab 105
Module Info Tab 106
Internet Protocol Tab 107
Port Configuration Tab 108
Network Tab 109
Auto-Generated Tags 110

Chapter 6

Optional HOA Keypad Operation

Introduction 121
Keypad Description 121
Keypad and HOA Disable 125

Chapter 7

Bulletin 280E/281E/284E Programmable Parameters

Basic Setup Parameters 127
Parameter Groups 128
ArmorStart EtherNet/IP Parameters 129
Introduction 129
Parameter Programming 129
Bulletin 280E, 281E 129
Basic Status Group 129
Produced Assembly Config Group 138
Starter Protection Group 139
User I/O Configuration Group 141
Miscellaneous Configuration Group 145
Starter Display Group (Bulletin 280E, 281E only) 146
Starter Setup Group (Bulletin 280E, 281E only) 148
Bulletin 284E 149
Basic Status Group 149
Produced Assembly Config Group 159
Starter Protection Group 160
User I/O Configuration Group 163
Miscellaneous Configuration Group 166
Drive I/O Configuration Group (Bulletin 284E only) 168
Drive Display Group (Bulletin 284E only) 170
Drive Setup Group (Bulletin 284E only) 175
Drive Advanced Setup Group (Bulletin 284E only) 179
Clear a Type 1 Fault and Restart the Drive 189
Clear an Overvoltage, Undervoltage, or Heatsink OvrTmp Fault without Restarting the Drive 190
Linear List of Parameters for Bulletin 280E, 281E and Bulletin 284E 201

Chapter 8

How to Configure an Explicit Message

Programming ControlLogix Explicit Message 207
Explicit Messaging with ControlLogix 207

Setting Up the MSG Instruction. 207
Formatting an Explicit Message 208
Performing Explicit Messages 209

Chapter 9

Diagnostics

Overview 211
Protection Programming. 211
Fault Display 211
Clear Fault 211
Fault Codes. 212
Fault Definitions. 212
Short Circuit. 212
Overload Trip. 212
Phase Loss 213
Phase Short 213
Ground Fault 213
Stall 213
Control Power 213
I/O Fault 213
Over Temperature. 213
Phase Imbalance. 213
Over Current 214
A3 Power Loss 214
Internal Communication Fault 214
DC Bus Fault 214
Electrically Erasable Programmable Read-Only Memory EEPROM Fault 214
Hardware Fault 214
Restart Retries 214
Miscellaneous Faults. 215
EtherNet/IP LED Status Indication 215
Control Module LED Status and Reset 217
Control Module Fault LED Indications. 217
Fault 11 Detail. 219
Resetting Device to Factory Defaults. 221

Chapter 10

Troubleshooting

Introduction. 229
Bulletin 280E, 281E Troubleshooting 230
Bulletin 284E Troubleshooting 230
Fault Definitions 230
IP67 Dynamic Brake Diagnostic (DB1) 231
DB1 Faults 232
Operation and Troubleshooting of the DB1 - Dynamic Brake. . . 232
DB1 Resistor Overtemperature Fault 232
DB1 Overcurrent Fault 233

DB1 Undercurrent Fault 233
DB1 Switch Fault 234
DB1 Open Fault 234
DB1 VBus Link Fault 234
DB1 Comm Fault 235
DB1 Thermal Warning 235
Reading the Control Supervisor Object 235
Hardware Fault - Fan RPM Warning 235
FAN Fault Handling with Firmware 66.21 of 284 235
Operation 235
Starter Status, Warning Bit 5: 236
Warning Status, Parameter 62: 236
Annunciation using PLC Logic 236
Internal Drive Faults 237
Ethernet Statistics 241
Troubleshoot and General Solutions for Linear or DLR Networks . . 241
Specific Issues on Your DLR or Linear Network 242
Troubleshoot Intermittent Ethernet Connectivity 245
Ethernet Statistics 247
Etherner Managed Switch Considerations 249
Internet Group Multicast Protocol 249
Virtual Local Area Networks 250
Port Mirroring 251
Control Module Removal and Installation 252
Removal of Control Module 252
Installation of Control Module 252
Fuse Replacement 253
Resetting Source Brake Fuse Faults 254

Chapter 11

Specifications for EtherNet/IP

Bulletin 280E, 281E 255
Motor Overload Trip Curves 259
Contactor Life Load Curves 260
Bulletin 284E 264
Sensorless Vector Control (SVC) 267
Motor Overload Trip Curves 268
Altitude Derating 270
Altitude Rating for 280/281 270
Altitude Rating for 284 270

Chapter 12

Accessories

Industrial Ethernet Media 271
D Code Connectivity (M12) – 1585D 271
Sensor Media 273
Sensor Wiring 273
Motor and Brake Cables 273

Three-Phase Power Field-Installed Receptacles 275
Sealing Caps 276
Handle and Cord Accessories 276
Dynamic Braking Resistors 277
Sensorless Vector Control (SVC) Minimum Resistance and Recommended Modules for Option DB 277
Bulletin 284E Option (-DB) – IP20 Resistor 278
Sensorless Vector Control (SVC) Recommended Dynamic Brake Modules for Option DB1 (IP67 Resistor) 279

Appendix A

Applying More Than One ArmorStart Motor Controller in a Single Branch Circuit on Industrial Machinery

Introduction 281
ArmorStart Product Family 284
Multiple-Motor Branch Circuits and Motor Controllers Listed for Group Installation – General 285
Maximum Fuse Ampere Rating According to 7.2.10.4(1) and 7.2.10.4(2) 287
Complete Text 287
Explanatory Example 289
Input and Output Conductors of Bulletin 290E and 291E Controllers (a) 295
Input and Output Conductors of Bulletin 294E Controllers (b) 295
Combined Load Conductors (c) 295

Appendix B

CIP Information

High Level Product Description 297
Product Codes and Name Strings 297
CIP Explicit Connection Behavior 297
EDS Files 298
CIP Object Requirements 298
Identity Object 299
CLASS CODE 0x0001 299
Assembly Object 301
CLASS CODE 0x0004 301
I/O Assemblies 302
Connection Manager Object 306
CLASS CODE 0x0006 306
Class 1 Connections 307
Exclusive Owner Connection 307
Listen Only Connection 308
Class 3 CIP Connections 308
Discrete Input Point Object 309
CLASS CODE 0x0008 309
Discrete Output Point Object 310
CLASS CODE 0x0009 310
Parameter Object 311

CLASS CODE 0x000F 311
Parameter Group Object 313
CLASS CODE 0x0010 313
Discrete Input Group Object 314
CLASS CODE 0x001D 314
Discrete Output Group Object 314
CLASS CODE 0x001E 314
Control Supervisor Object 316
CLASS CODE 0x0029 316
Overload Object 318
CLASS CODE 0x002C 318
Device Level Ring (DLR) Object 319
CLASS CODE 0x0047 319
Qos Object 320
CLASS CODE 0x0048 320
DPI Fault Object 321
CLASS CODE 0x0097 321
DPI Alarm Object 325
CLASS CODE 0x0098 325
Interface Object 327
CLASS CODE 0x00B4 327
TCP/IP Interface Object 328
CLASS CODE 0x00F5 328
Ethernet Link Object 329
CLASS CODE 0x00F6 329

Appendix C

Using DeviceLogix

DeviceLogix Programming 332
DeviceLogix Programming Example 333
Import and Export 339

Appendix D

Renewal Parts

Bulletin 280E, 281E 341
Control Module Renewal Part Product Selection 341
Base Module Renewal Part Product Selection 342
Bulletin 284E 343
Control Module Renewal Part Product Selection 343
Base Module Renewal Part Product Selection 344
Replacement Fuses 346
Replacement Parts 346

Appendix E

System Design Considerations When Using a Line Reactor

General Rule 347
Reasons to Use 347
Design 348

Application Examples

Appendix F

Manual Brake Control. 349
284 - VFD Preset Speed Example 352
Operation 357
DeviceLogix Ladder Editor Example 358
ArmorStart 280 and 281 Status Bits. 358
Bulletin 280 and 281 ArmorStart Fault Bits 359
Bulletin 280 and 281 ArmorStart Outputs 360
Bulletin 280 and 281 ArmorStart Produced Network Bits 360
Bulletin 284 ArmorStart Status Bits. 361
Bulletin 284 ArmorStart Fault Bits 361
Bulletin 284 ArmorStart Outputs 362
Bulletin 284 ArmorStart Produced Network Bits 363
Reporting Examples 364
How to Report the RPM of the 284 Internal Fan 364
How to report the Heat Sink Temperature of the 284 364
How to Report the Last Four Faults. 365
How to Report an IP Address Conflict Detection 365
Demand Torque Off Considerations 366
Keypad Disable with DeviceLogix 366
Motion Disable 366

Notes:

Product Overview

		
Bulletin	**280E/281E**	**284E**
Type	EtherNet/IP	
Horsepower Range:		
0.5…10 Hp (0.37…7.5 kW)	✓	—
0.5…5 Hp (0.4…3.0 kW)	—	✓
Starting Method:		
Full-Voltage and Reversing	✓	—
Sensorless Vector Control	—	✓
Environmental Rating:		
IP67/NEMA Type 4	✓	✓
Control Voltage:		
24V DC	✓	✓
Operational Voltage Ratings:		
200…480V AC	✓	—
380…480V AC	—	✓
Rated for Group Motor Installations	✓	✓
Local logic using Logix	✓	✓
I/O Capability:		
Four Inputs	✓	✓
Two Outputs	✓	✓
Network Communications:		
EtherNet/IP	✓	✓
LED Status Indication	✓	✓
Gland Plate Entry:		
Conduit Entrance	✓	✓
ArmorConnect® Power Media	✓	✓
Quick Disconnects (I/O, Communications, Motor Connection, Three-Phase, and Control Power)	✓	✓
Extended Length Motor and Brake Cables	✓	✓
Factory Installed Options:		
Hand-Off-Auto (HOA) Keypad	✓	✓
Source Brake Contactor	—	✓
Dynamic Brake Connector	—	✓
Output Contactor	—	✓
EMI Filter	—	✓
Shielded Motor Cable	—	✓

Introduction

This chapter provides a brief overview of the features and functionality of the ArmorStart® EtherNet/Industrial Protocol (IP) Distributed Motor Controllers, Bulletin 280E, 281E, and 284E.

Description

The ArmorStart EtherNet/IP Distributed Motor Controllers are integrated, pre-engineered, motor starting solutions. Bulletins 280E and 281E are used for full-voltage and reversing applications, respectively. Bulletin 284E is used in variable frequency applications where more precise motor control is needed. The ArmorStart EtherNet/IP controller offers a robust IP67/UL Type 4/12 enclosure design, that is suitable for water wash down environments.

ArmorStart EtherNet/IP controller includes an embedded dual port switch that supports Device Level Ring (DLR) applications. It supports IEEE 1588 end-to-end transparent clock. This allows synchronization within a distributed network of devices. Transparent clocks in combination with enhanced or managed ethernet switches are able to adjust for network introduced timing delays and improve the performance of motion applications.

The ArmorStart EtherNet/IP network address can be configured dynamically or statically via the embedded Web Server. In addition, the controller's IP address can be manually set via three IP address switches found on the I/O section of the device.

The controller's embedded web server allows the user to check status, diagnostics, and perform simple device configuration using a standard web browser. It also supports SMTP protocol that allows the user to configure the device to send an alert e-mail of potential issues.

The ArmorStart Distributed Motor Controller is a modular "plug and play" (PnP) design that offers simplicity in wiring and installation. The quick disconnects for the I/O, communications, and motor connections reduce the wiring time and minimize wiring errors. The controller offers, as standard, four configurable (sink/source) DC inputs and two sourcing solid state outputs, to be used with sensors and actuators respectively, for monitoring and controlling the application process. The ArmorStart controller's light-emitting diode (LED) status indication and built-in diagnostics capabilities allow ease of maintenance and troubleshooting. The optional Hand/Off/Auto (HOA) keypad configuration allows local start/stop control.

An Add-On-Profile (AOP) for ControlLogix is available. AOPs streamline the programming and installation by eliminating the task of individually configuring the device tags.

The copy and paste function allows easy configuration of multiple ArmorStart controllers. RSLogix 5000 revision 17.01 or later is required to implement AOP support.

The ArmorStart controller and associated motor cable have been evaluated as a system by UL and is suitable for group installation. ArmorStart controllers contain a UL Listed disconnect that in many applications, eliminates the need for additional components.

Catalog Number Explanation

Examples that are given in this section are for reference purposes. This basic explanation should not be used for product selection because not all combinations produce a valid catalog number.

Figure 1 - Catalog Number Explanation for 280E, 281E

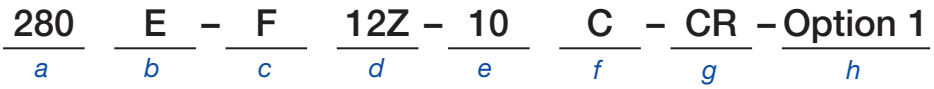

a

Bulletin Number	
Code	Description
280	Full Voltage Starter
281	Reversing Starter

b

Code	Description
E	EtherNet/IP

c

Enclosure Type	
Code	Description
F	IP67/ UL Type 4/12

d

Contactor Size/Control Voltage
24V DC
12Z
23Z

e

Short Circuit Protection (Motor Circuit Protection)	
Code	Description
10	10 A Rated Device
25	25 A Rated Device

f

Overload Selection Current Range	
Code	Description
A	0.24…1.2 A
B	0.5…2.5 A
C	1.1…5.5 A
D	3.2…16 A

g

Control and 3-Phase Power Connections/Motor Cable Connection (CR: Conduit/Round Media) or (RR: Round/Round Media) or (DR: D/Round Media)				
Code		Description		
		Control Power	3-Phase Power	Motor Cable
CR	blank	Conduit Entrance	Conduit Entrance	3 m, unshielded cordset male 90°
CR	W	Conduit Entrance	Conduit Entrance	No cable
DR	blank	Conduit Daisy Chain	Conduit Daisy Chain	3 m, unshielded cordset male 90°
DR	W	Conduit Daisy Chain	Conduit Daisy Chain	No cable
RR	blank	Round Media (Male Receptacle)	Round Media (Male Receptacle)	3 m, unshielded cordset male 90°
RR	W	Round Media (Male Receptacle)	Round Media (Male Receptacle)	No cable

h

Option 1	
Code	**Description**
3	Hand/Off/Auto Selector Keypad
3FR	Hand/Off/Auto Selector Keypad with Forward/Reverse

Figure 2 - Catalog Number Explanation for 284E

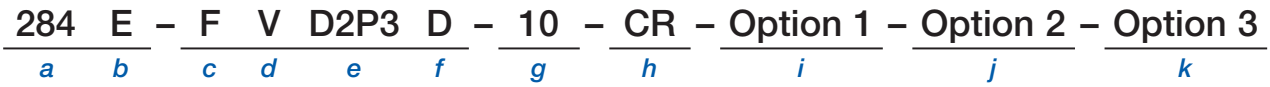

a

Bulletin Number	
Code	Description
284	VFD Starter

b

Communications	
Code	Description
E	EtherNet/IP

c

Enclosure Type	
Code	Description
F	Type 4 (IP67)

d

Torque Performance Mode	
Code	Description
V	Sensorless Vector Control and Volts per Hertz

e

Output Current	
380…480V	
Code	Description
D1P4	1.4 A, 0.4 kW, 0.5 Hp
D2P3	2.3 A, 0.75 kW, 1.0 Hp
D4P0	4.0 A, 1.5 kW, 2.0 Hp
D6P0	6.0 A, 2.2 kW, 3.0 Hp
D7P6	7.6 A, 3.3 kW, 5.0 Hp

f

Control Voltage	
Code	Description
Z	24V DC

g

Short Circuit Protection (Motor Circuit Protector)	
Code	Description
10	10 A Rated Device
25	25 A Rated Device

h

Control and 3-Phase Power Connections / Motor Cable Connection (CR: Conduit/Round Media) or (RR: Round/Round Media)				
Code		Description		
		Control Power	3-Phase Power	Motor Cable
CR	blank	Conduit Entrance	Conduit Entrance	3 m, unshielded cordset male 90°
CR	N	Conduit Entrance	Conduit Entrance	3 m, shielded cordset male 90°
CR	W	Conduit Entrance	Conduit Entrance	No cable
DR	blank	Conduit Daisy Chain	Conduit Daisy Chain	3 m, unshielded cordset male 90°
DR	N	Conduit Daisy Chain	Conduit Daisy Chain	3 m, shielded cordset male 90°
DR	W	Conduit Daisy Chain	Conduit Daisy Chain	No cable
RR	blank	Round Media (Male Receptacle)	Round Media (Male Receptacle)	3 m, unshielded cordset male 90°
RR	N	Round Media (Male Receptacle)	Round Media (Male Receptacle)	3 m, shielded cordset male 90°
RR	W	Round Media (Male Receptacle)	Round Media (Male Receptacle)	No cable

i

Option 1	
Code	Description
3	Hand/Off/Auto Selector Keypad with Jog Function

j

Option 2		
Code		Description
DB	blank	DB Brake Connector
DB1	blank	Connectivity to IP67 DB Resistor
SB	blank	Source Brake Contactor
SB	W *	No cable

k

Option 3	
Code	Description
EMI	EMI Filter
OC	Output Contactor

Operation

The ArmorStart Distributed Motor Controllers can operate three-phase squirrel-cage induction motors as follows:

Bulletin 280E, 281E: up to 10 Hp (7.4 kW) at 480V AC
Bulletin 284E: up to 5 Hp (3.0 kW) at 480V AC

ArmorStart EtherNet/IP controllers accept 24V DC control voltage. The control voltage provides power to inputs (unswitched) and outputs (switched). Unswitched control voltage is used to ensure no loss of sensor or other field input status under normal operation.

Mode of Operation

Bulletin 280E, 281E

Full-Voltage Start

This method is used in applications requiring across-the-line starting, where full inrush current and locked-rotor torque are realized. The ArmorStart Bulletin 280E offers full-voltage starting and the Bulletin 281E offers full-voltage starting for reversing applications.

Figure 3 - Full-Voltage Start



Bulletin 284E

Sensorless Vector Control

Sensorless vector control provides exceptional speed regulation and very high levels of torque across the entire speed range of the drive. Features include:

- Autotune feature allows the motor controller to adapt to individual motor characteristics.
- Able to develop high torque over a wide speed range and adapts to individual motor characteristics.

Figure 4 - Sensorless Vector Control

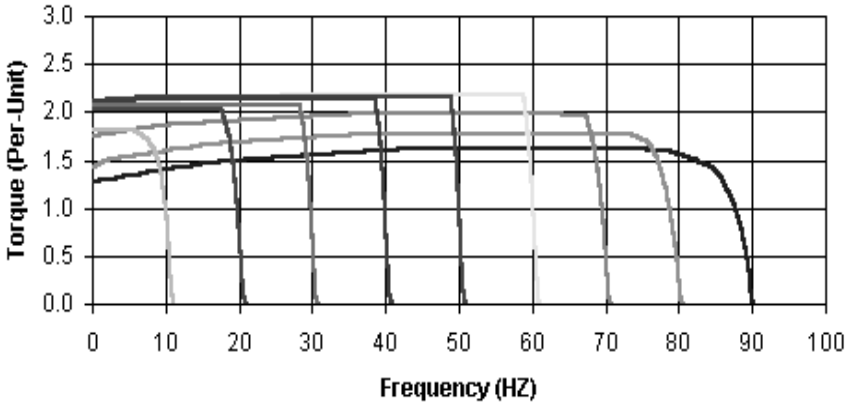

Description of Features

Overload Protection

The ArmorStart Distributed Motor Controller incorporates, as standard, electronic motor overload protection. This overload protection is accomplished electronically with an I^2t algorithm. The ArmorStart controller's overload protection is programmable via the communication network, providing the user with flexibility.

The Bulletin 280E, 281E overload trip class can be selected for class 10, 15, 20 protection. The Bulletin 284E overload trip class is Class 10 only. Ambient insensitivity is inherent in the electronic design of the overload (see Chapter 11 for the specification for overload trip curves).

Embedded Switch Technology

ArmorStart EtherNet/IP controller includes embedded switch technology as standard. Each ArmorStart EtherNet/IP controller consumes one Common Industrial Protocol (CIP) connection. The ArmorStart controller consumes a Class 3 connection when RSLogix 5000 software displays the AOP.

In general, for a Device Level Ring (DLR) or linear network keep individual segments to 50 nodes or less. In addition, it is important to reserve a minimum of 10% of available bandwidth to allow for processing of explicit messages.

Common features are:

- Designed according to the ODVA specification for EtherNet/IP. ODVA specification found at http://www.odva.org/
- Embedded switch technology is designed to enable end devices to form linear and ring network topologies
- Supports DLR protocol
- Supports IEEE 1588 transparent clock for CIP Motion and CIP Sync applications
- Supports the management of network traffic to ensure timely delivery of critical data, that is, QoS and IGMP protocols are supported

Note: DLR ports cannot be used as two Network Interface Cards (NICs) connected to two different subnets.

Switched vs. Unswitched Control Power Input/Output (I/O) Connections

The voltage at terminals A1/A2 supplies power to the ArmorStart outputs. Removing this power or placing the ArmorStart disconnect in the "OFF" position disables the outputs.

The unswitched power A3/A2 supplies power to the input and communication module. This power is not affected by the state of the disconnect switch. This ensures that anytime the controller can communicate, the state of the inputs is correct.

Figure 5 - Input and Output Configuration

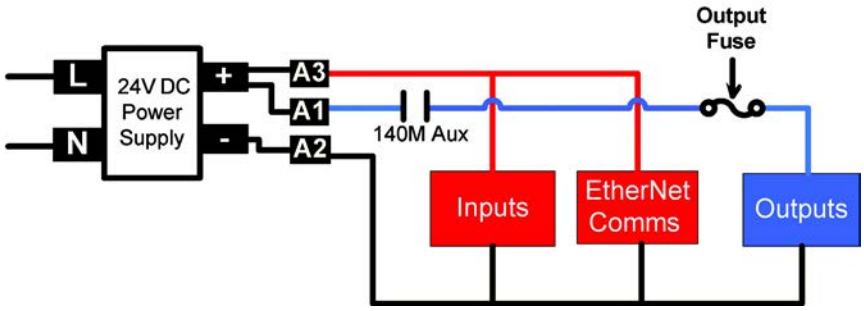

EtherNet/IP Ports

ArmorStart EtherNet/IP controller includes a dual port Ethernet switch that supports 10/100 Mbps It utilizes a sealed D-coded micro (M12) style ethernet connector. Dynamic Host Configuration Protocol (DHCP) is enabled as the factory default. Before using your adapter in an EtherNet/IP network, you may need to configure an IP address or set the address statically.

ATTENTION: To avoid unintended operation, the adapter must be assigned a fixed IP address. If a DHCP server is used, it must be configured to assign a fixed IP address for your adapter.

Failure to observe this precaution may result in unintended machine motion or loss of process control.

Embedded Web Server

The embedded web server allows the user to view information and configure the ArmorStart controller via a web browser. The default login is "Administrator". **There is no password set by default.**

IMPORTANT The user should set the password to a unique value for authorized personnel. If the Login and password are lost, you will need to reset the device to factory defaults via the Programmable Logic Controller (PLC). **Note:** The configuration will be lost.

E-mail Notification Configuration

The embedded web server supports configuration of the Simple Mail Transfer Protocol (SMTP). Once properly configured, the motor controller e-mails the user with specific fault/trip messages.

EtherNet/IP LED Status Indication

Figure 6 - EtherNet/IP LED



EtherNet/IP LED status and diagnostics consists of four LEDs.

- Link Activity/Status LEDS
  - Ethernet Link1 Activity/Status (Port 1) – LED Color: Bicolor (Green/Yellow)
  - Ethernet Link2 Activity/Status (Port 2) – LED Color: Bicolor (Green/Yellow)
- "MOD" LED – Bicolor Red/Green represents the ethernet module status
- "NET" LED – Bicolor Red/Green represents the ethernet network status

Control Module LED Status and Reset

Figure 7 - LED Status Indication and Reset



The Control Module LED status and diagnostics consists of four status LEDs and a Reset button.

- **POWER LED**
  The LED is illuminated solid green when switched (+A1/A2) control power is present and with the proper polarity.
- **RUN LED**
  This LED is illuminated solid green when a start command and control power are present.
- **NETWORK LED**
  This bicolor (red/green) LED indicates the status of the internal communication link.
- **FAULT LED**
  This indicates a Controller Fault (trip) condition.

The "Reset Button" is a local trip reset.

Electronic Data Sheet (EDS)

EtherNet/IP devices have Electronic Data Sheets (EDS). These are specially formatted text files, as defined by the CIP specifications, that represent the object model of the device. EDS files contain details about the readable and configurable parameters of the EtherNet/IP device. They also provide information about the I/O connections the device supports and the content of the associated data structures. EDS files are used by EtherNet/IP device configuration tools, such as RSNetWorx™ for EtherNet/IP, and data servers such as RSLinx® Classic.

EDS files for all ArmorStart EtherNet/IP devices can also be uploaded directly from the device via the web server interface. Rockwell Automation product EDS files are also available on the internet at: http://www.ab.com/networks/eds.

Fault Diagnostics

Fault diagnostics capabilities that are built in the ArmorStart Distributed Motor Controller are designed to help you pinpoint a problem for easy troubleshooting and quick restarting.

Protection Faults

Protection Faults are generated when potentially dangerous or damaging conditions are detected. Protection Faults are also known as "Trips."

Table 1 - Protection Faults

Bulletin 280E, 281E Trip Status	Bulletin 284E Trip Status	PowerFlex® 40 Fault Codes
Short Circuit	Short Circuit	—
Overload	Overload	(Drive Codes 7 and 64)
Phase Loss	Phase Short	(Drive Codes 38…43)
Reserved	Ground Fault	(Drive Code 13)
Reserved	Stall	(Drive Code 6)
Control Pwr Loss	Control Pwr Loss	—
Input Fault	Input Fault	—
Over Temperature	Over Temperature	—
Phase Imbalance	Over Current	(Drive Codes 12 and 63)
A3, Unswitched Power Loss	A3, Unswitched Power Loss	—
Reserved	Internal Comm	(Drive Code 81)
Reserved	DC Bus Fault	(Drive Codes 3, 4 and 5)
EEprom	EEprom	(Drive Code 100)
Hdw Flt	Hdw Flt	(Drive Codes 70 and 122)
Reserved	Restart Retries	(Drive Code 33)
Reserved	Misc. Fault ❶	(Drive Codes 2, 8, 29, 48 and 80)

❶ Included is DB1 monitoring or resistor issue.

Parameter Group "Start Protection," Parameter 24 "PrFault Enable" is used to enable and disable the above protection faults. See Parameter 61 "LastPR Fault" for additional details of the last protection fault.

Standard Features

Inputs

The EtherNet/IP version includes four 24V DC inputs that are single keyed (two inputs per connector) and sourced from A3/A2 control power. The inputs use two M12 connectors. Each input has an LED status indication. They are configurable as sinking or sourcing.

Outputs

The EtherNet/IP version includes two self-protected solid state outputs that are single keyed (one per connector), sourced from A1/A2 control power. Outputs are sourcing type with a maximum current per output point of 0.5 A DC. The outputs use one M12 connector per output, each having LED status indication. For high duty cycle applications, consider using an interposing relay to reduce the wear on the internal output.

Gland Plate Entrance

The ArmorStart controller offers three different methods of connecting incoming three-phase and control power to the device. One method that is offered is the traditional conduit entrance with a 0.75 in. and a 1 in. conduit hole opening. The second method that is offered is daisy chain (feed through) power reducing the need for additional components such as junction boxes. The third method offers connectivity to the ArmorConnect power media. Factory-installed receptacles are provided for connectivity to both three-phase and control power media.

Motor Cable

With every ArmorStart Distributed Motor Controller, a 3-meter unshielded 4-conductor cordset is provided with each unit as standard. If the optional Electromagnetic Interference (EMI) Filter is selected for Bulletin 284E units, a shielded 4-conductor cordset is provided with each unit as standard.

DeviceLogix

DeviceLogix™ is a stand-alone Boolean program that resides within the ArmorStart Distributed Motor Controller. DeviceLogix is programmed locally using the AOP and implements Boolean math operations, such as, AND, OR, NOT, Timers, Counters, and Latches. DeviceLogix can run as a stand-alone application, independent of the network. However, 24V DC via A3 unswitched control power, must be maintained.

Factory-Installed Options

Optional HOA Keypad Configuration (Bulletin 280E, 281E only)

The ArmorStart controller offers two optional factory-installed Hand/Off/Auto (HOA) configurations: Standard and Forward/Reverse HOA.

Figure 8 - Optional HOA Configuration (Bulletin 280E left, 281E right)



Optional HOA Selector Keypad with Jog Function (Bulletin 284E only)

The HOA Selector Keypad with Jog Function allows for local start/stop control with capabilities to jog in forward/reverse motor directions.

Figure 9 - Optional HOA with Jog Function Configuration



Source Brake Contactor and Connector (Bulletin 284E only)

An internal contactor is used to switch the electromechanical motor brake On/Off. The motor brake contactor is powered from the main power circuit. The configuration of the R1 relay controls the function of the brake. A customer accessible 3 A fuse is provided to protect the brake cable. Included is a 3-meter, 3-pin cordset for connection to the motor brake as standard.

EMI Filter (Bulletin 284E only)

The EMI filter is required to be CE compliant. When selected, a 3-meter, shielded 4-conductor motor cordset is provided as standard. The filter must only be used in installations with solidly grounded AC supply distribution and must be bonded to the power distribution ground.

Dynamic Brake Connector (Bulletin 284E only)

The user selectable DB Option includes a 3-meter, 3-pin cordset for connection to an IP20 Dynamic Brake Module. See Chapter 11 for available dynamic brake modules.

Note: The IP67 Dynamic Brake Resistor cannot be used with the **-DB** factory-installed option.

IP67 Dynamic Brake Resistor (Bulletin 284E only)

The IP67 Dynamic Brake Resistor design offers simplicity in wiring and installation. The user-selectable DB1 option provides the quick connector and an internal resistor monitoring circuit board. The cable lengths available are 0.5 m and 1.0 m. The IP67 Dynamic Brake is separately ordered. See Chapter 11 for available IP67 Dynamic Brake Resistors.

Note: The IP67 Dynamic Brake Resistor is used only with the **-DB1** factory-installed option. Only the specified IP67 Dynamic Brake Resistor can be used based on the VFD horsepower. Connecting resistors other than those specified, result in a DB1 fault.

Output Contactor (Bulletin 284E only)

An internal contactor is sourced from the 24V DC (A1/A2) control voltage to isolate the load side of the Bulletin 284E ArmorStart Distributed Motor Controller. When control power is applied to A1/A2, the output contactor closes. When control power is removed, the output contactor opens. There is no other switching element that allows alternate control of the output contactor. A sequenced stop involving the output contactor cannot be performed.

Shielded Motor Cable (Bulletin 284E only)

If the EMI Filter is selected, a 3-meter, shielded 4-conductor cordset is provided as standard.

ArmorStart EtherNet/IP Features

Figure 10 - Bulletin 280E, 281E ArmorStart with EtherNet/IP Communication Protocol



Figure 11 - Bulletin 284E ArmorStart with EtherNet/IP Communication Protocol



Notes:

Installation, Wiring, and Maintenance

Receiving

It is the responsibility of the user to thoroughly inspect the equipment before accepting the shipment from the freight company. Check the item(s) received against the purchase order. If any items are damaged, it is the responsibility of the user not to accept delivery until the freight agent has noted the damage on the freight bill. If any concealed damage is found during unpacking, it is again the responsibility of the user to notify the freight agent. The shipping container must be left intact and the freight agent should be requested to make a visual inspection of the equipment.

Unpacking

Remove all packing material, wedges, or braces from within and around the Armorstart distributed motor controller. Remove all packing material from the device(s). Check the contents of the package. Contact your local Allen-Bradley® representative if any items are missing.

IMPORTANT Before the installation and start-up of the drive, a general inspection of mechanical integrity (i.e. loose parts, wires, connections, packing materials, etc.) must be made.

Inspecting

After unpacking, check the item(s) nameplate catalog number(s) against the purchase order. See Chapter 1 for an explanation of the catalog numbering system that aids in nameplate interpretation.

Storing

The controller should remain in its shipping container before installation. If the equipment is not to be used for a period of time, it must be stored according to the following instructions to maintain warranty coverage.

- Store in a clean, dry location.
- Store within an ambient temperature range of –25...+85 °C (–13...+185 °F).
- Store within a relative humidity range of 0...95%, noncondensing.
- Do not store equipment where it could be exposed to a corrosive atmosphere.
- Do not store equipment in a construction area.

General Precautions

In addition to the precautions listed throughout this manual, the following statements, that are general to the system, must be read and understood.



SHOCK HAZARD: Risk of electrical shock. Do not disconnect or connect power cables under load.



ATTENTION: Total circuit impedance must be low enough to ensure any short circuit or ground fault current is large enough to operate the fuse or circuit breaker. Failure to comply can result in death, personal injury, and/or equipment damage.



ATTENTION: The controller contains ESD (electrostatic discharge) sensitive parts and assemblies. Static control precautions are required when installing, testing, servicing, or repairing the assembly. Component damage may result if ESD control procedures are not followed. If you are not familiar with static control procedures, see Publication 8000-4.5.2, *Guarding against Electrostatic Discharge*, or any other applicable ESD protection handbooks.



ATTENTION: An incorrectly applied or installed controller can damage components or reduce product life. Wiring or application errors, such as undersizing the motor, incorrect or inadequate AC supply, or excessive ambient temperatures, may result in malfunction of the system.



ATTENTION: Only personnel familiar with the controller and associated machinery should plan or implement the installation, startup, and subsequent maintenance of the system. Failure to do this may result in personal injury and/or equipment damage.



ATTENTION: To prevent electrical shock, open the disconnect switch before connecting and disconnecting cables. Risk of shock – environment rating may not be maintained with open receptacles.

Precautions for Bulletin 284E Applications



WARNING: The drive contains high voltage capacitors that take time to discharge after removal of mains supply. Before working on a drive, verify isolation of mains supply from line inputs (R, S, T [L1, L2, L3]). Wait three minutes for capacitors to discharge to safe voltage levels. Failure to do so may result in personal injury or death.
Darkened display LEDs are not an indication that capacitors have discharged to safe voltage levels. Risk of shock – environment rating may not be maintained with open receptacles.



ATTENTION: Only qualified personnel familiar with adjustable frequency AC drives and associated machinery should plan or implement the installation, startup, and subsequent maintenance of the system. Failure to do this may result in personal injury and/or equipment damage.

Dimensions

Dimensions are shown in millimeters (inches). Dimensions are not intended to be used for manufacturing purposes. All dimensions are subject to change.

280E, 281E Conduit Gland Entrance Bulletin

Figure 12 - Dimensions for Bulletin 280E, 281E (CR Option)

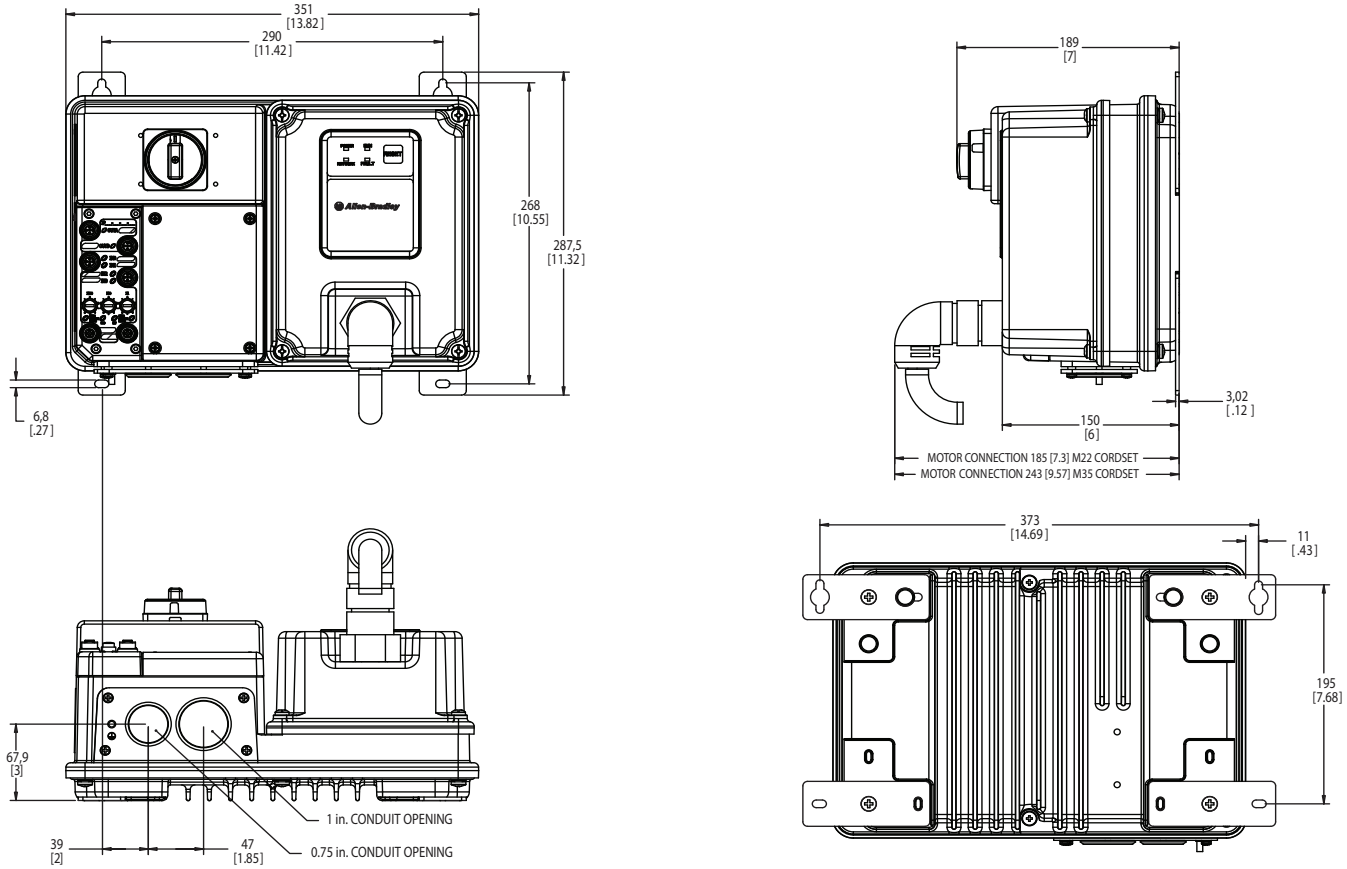

280E, 281E Daisy Chain (DR) Conduit Entrance

Figure 13 - Dimensions for Bulletin 280E, 281E (DR Option)

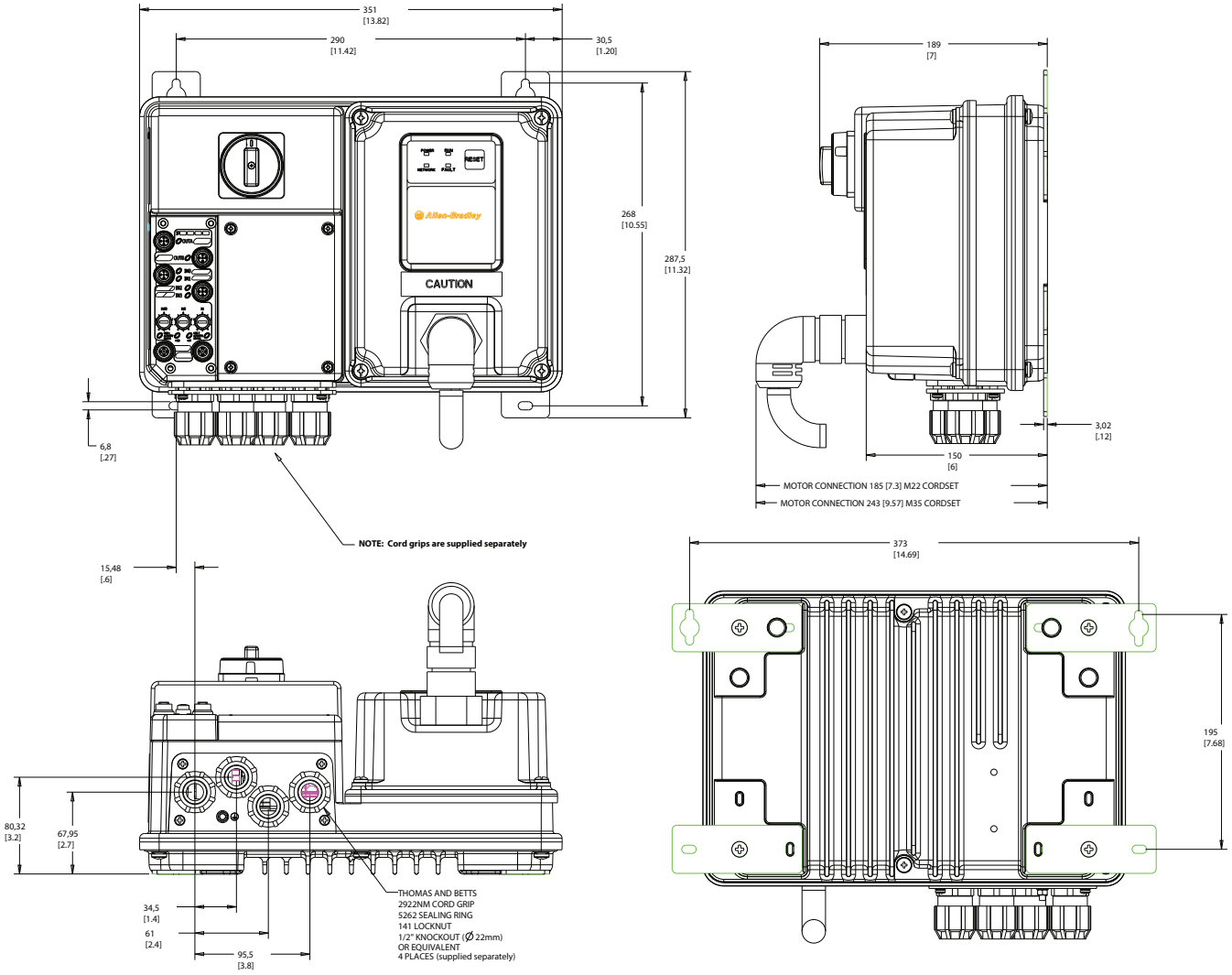

284E Conduit Gland Entrance Bulletin

Figure 14 - Dimensions for Bulletin 284E (CR Option)

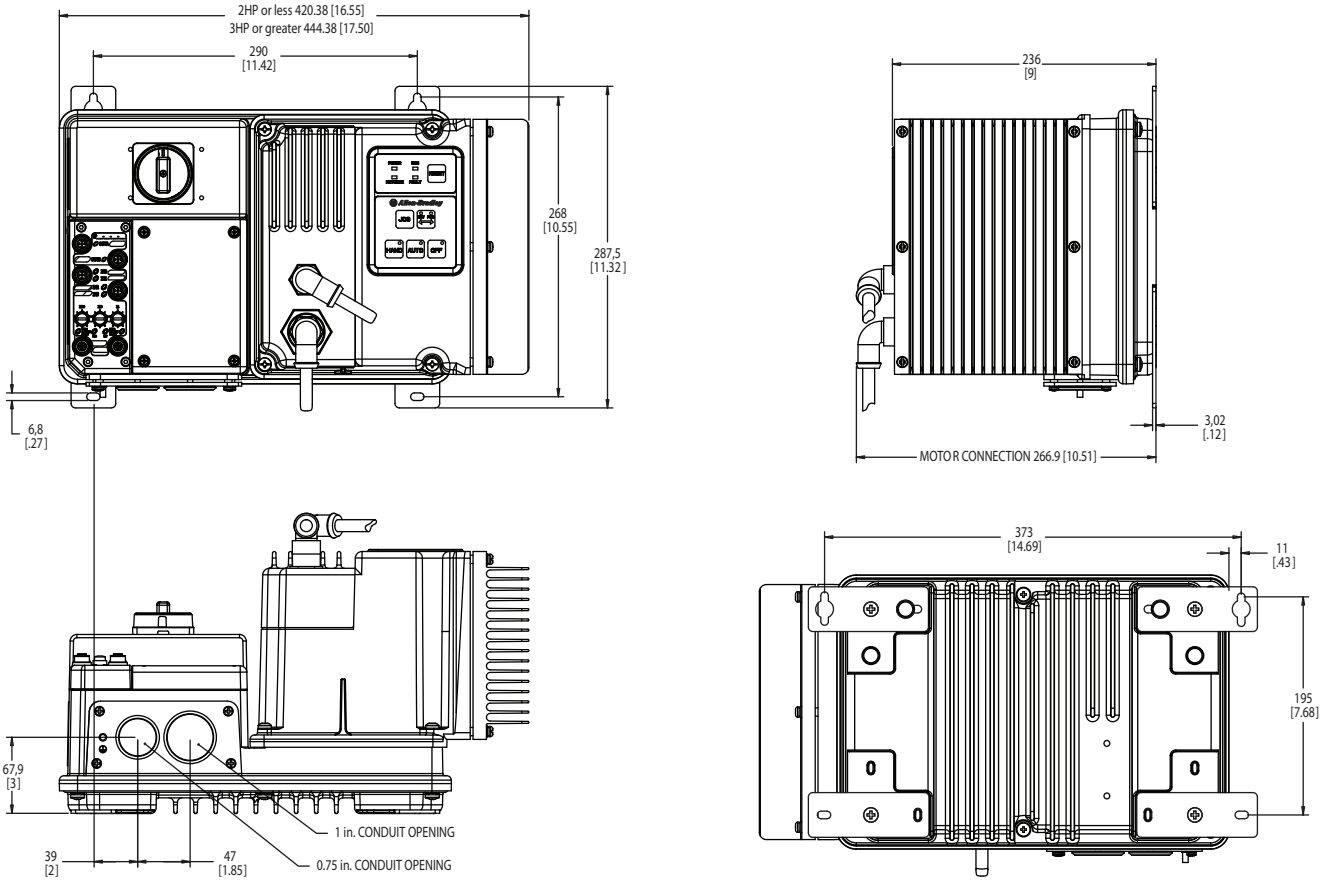

284E Daisy Chain (DR) Conduit Entrance

Figure 15 - Dimensions for Bulletin 284E (DR Option)

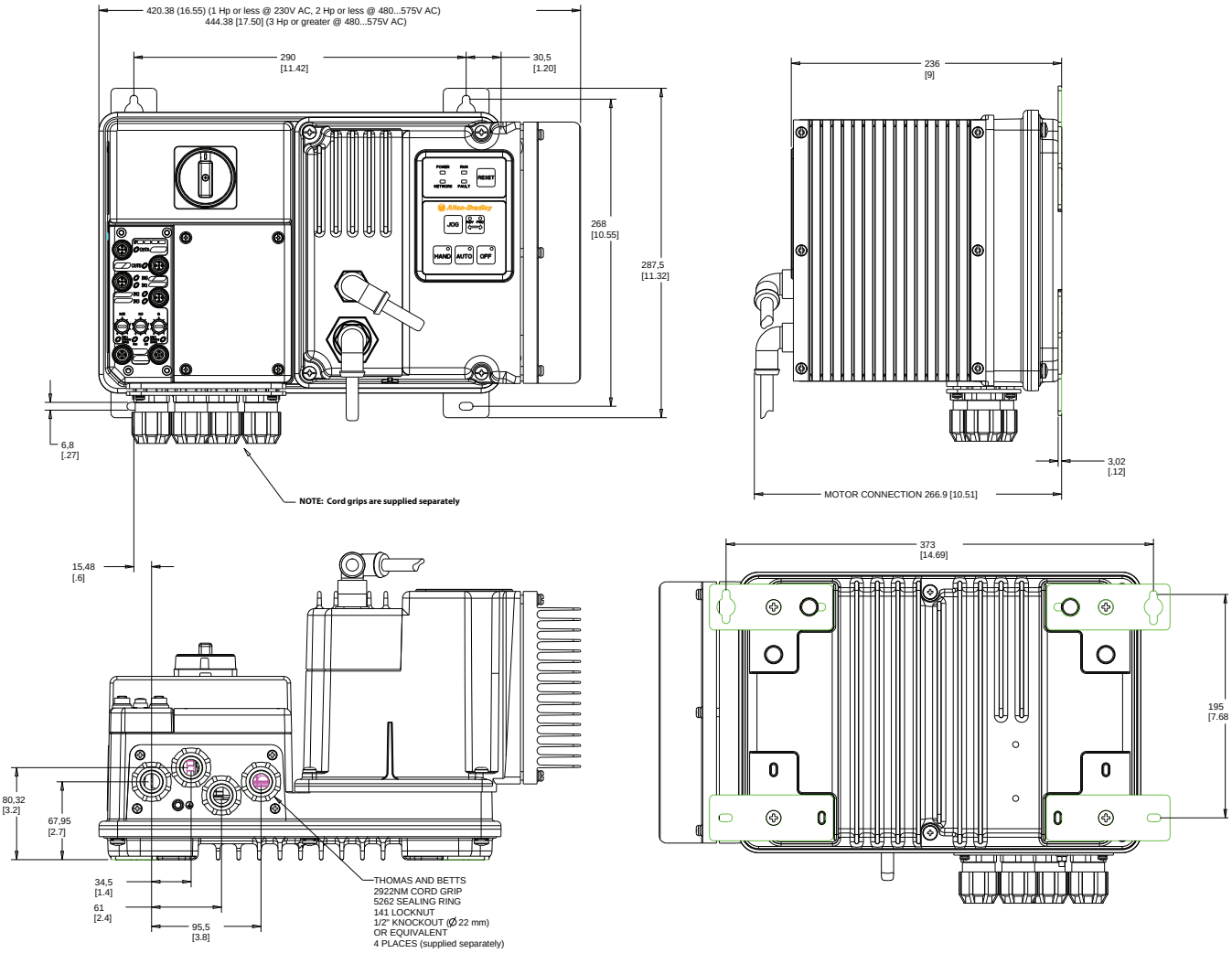

280E, 281E ArmorConnect Gland Connectivity Bulletin

Figure 16 - Dimensions for Bulletin 280E, 281E (RR Option)

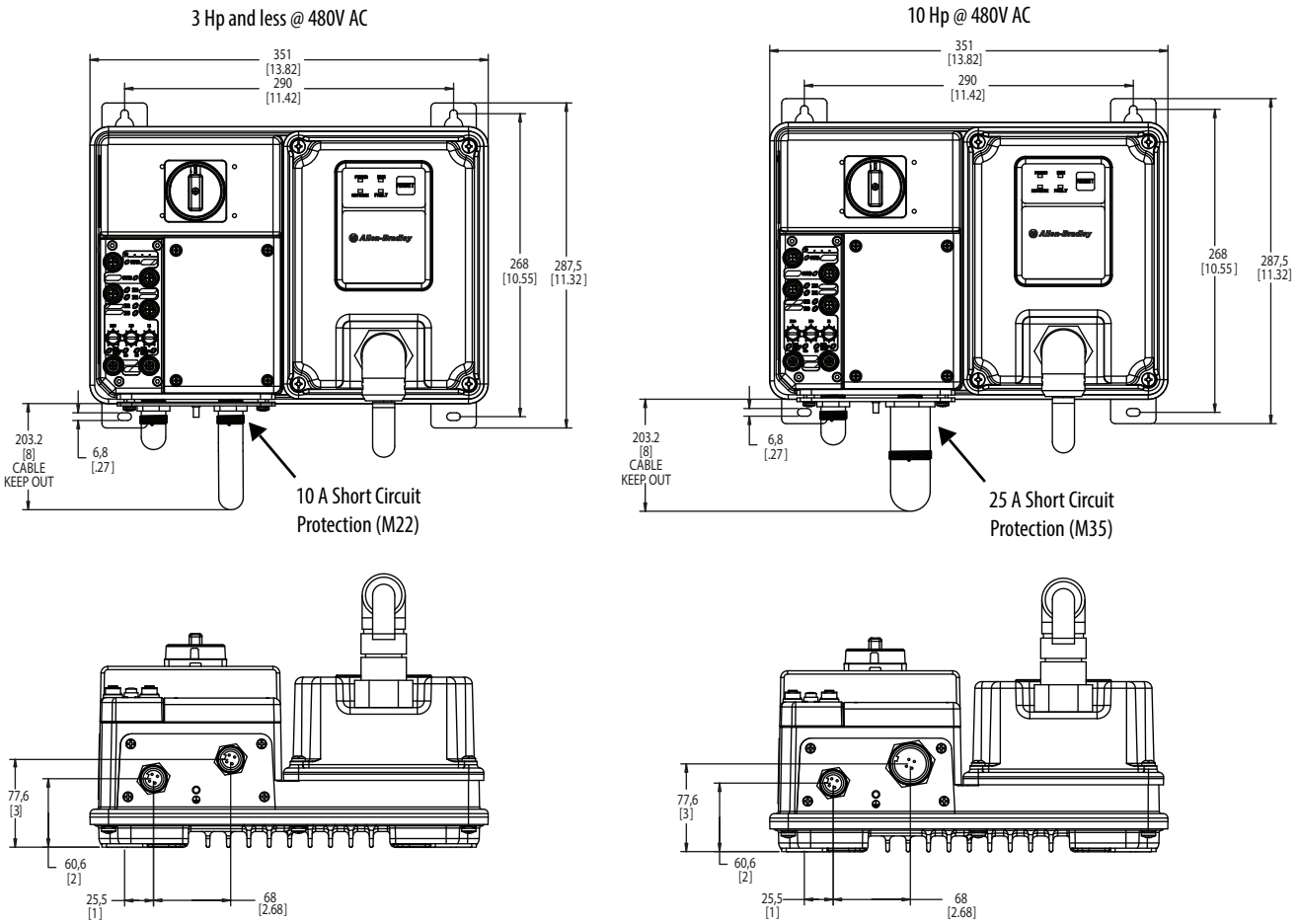

284E ArmorConnect Gland Connectivity Bulletin

Figure 17 - Dimensions for Bulletin 284E (RR Option)

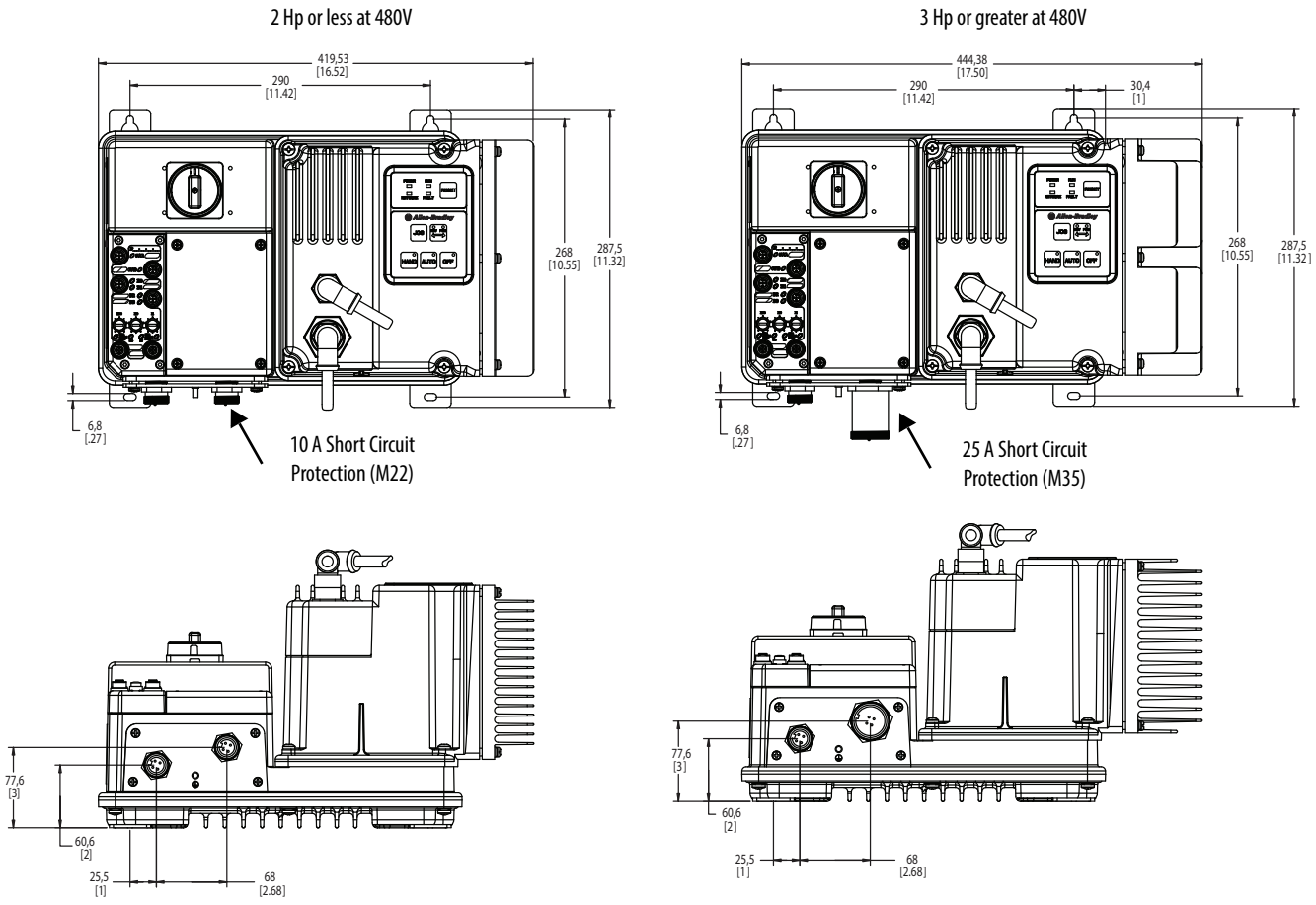

Mount Orientation

The recommended mounting orientation of ArmorStart EtherNet/IP controller is the vertical configuration. This is especially important for the Bulletin 284. This allows proper air flow over the heat sink. Improper mounting or debris build up reduces air flow and increased internal temperatures. This may reduce the overall life of the product. For alternate mounting contact your local sales representative.

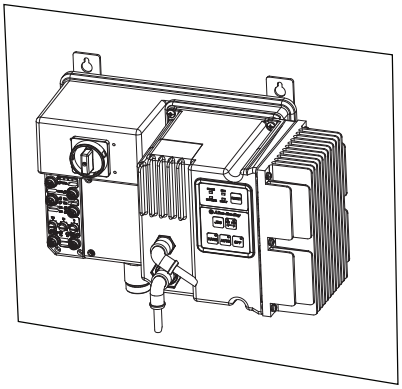

IMPORTANT For proper heat dissipation and product operation, mount in the vertical orientation as shown.

Operation

The ArmorStart Distributed Motor Controllers can operate three-phase squirrel-cage induction motors as follows:

Bulletin 280E, 281E: 0.24...16 A; 200V AC, 230V AC, 460V AC; 50/60 Hz.
Bulletin 284E: up to 5 Hp (3.0 kW) @ 480V AC

The ArmorStart EtherNet/IP Distributed Motor Controller accepts a control power input of 24V DC.

Wiring

Power, Control, and Ground Wiring

Table 2 provides the power, control, and ground wire capacity and the tightening torque requirements. The power, control, ground, and terminals accepts a maximum of two wires per terminal.

Table 2 - Power, Control, Ground Wire Size, and Torque Specifications

Terminals	Wire Size	Torque	Wire Strip Length
Power and Ground	**Primary/Secondary Terminal:** 1.5…4.0 mm^2 (#16 …#10 American Wire Gage (AWG))	**Primary Terminal:** 10.8 lb•in (1.2 N•m) Secondary Terminal: 4.5 lb•in (0.5 N•m)	0.35 in. (9 mm)
Control Inputs	1.0 mm^2…4.0 mm^2 (#18…#10 AWG)	6.2 lb•in (0.7 N•m)	0.35 in. (9 mm)

Standard Conduit/Knockout Size

The following table shows conduit or cord grip size and the diameter of the punched hole. For example, 0.5 in. conduit requires a hole punch of 0.885 in. for proper installation.

Table 3 - Conduit and Knockout Sizes

Conduit/Cord Size [mm]	Conduit/Cord Size [in.]	Actual Hole Diameter [mm]	Actual Hole Diameter [in.]
16.00	0.50	22.48	0.885
21.00	0.75	28.32	1.115
27.00	1.00	34.59	1.362
35.00	1.25	43.21	1.701
41.00	1.50	49.48	1.948
53.00	2.00	61.34	2.415
63.00	2.50	73.91	2.910

Terminal Designations

As shown in Figure 18, the ArmorStart Distributed Motor Controller contains terminals for power, control, and ground wiring. Access can be gained by removing the terminal access cover plate.

Figure 18 - ArmorStart Power and Control Terminal Connections (applies to Bulletin 280E, 281E, and Bulletin 284E)

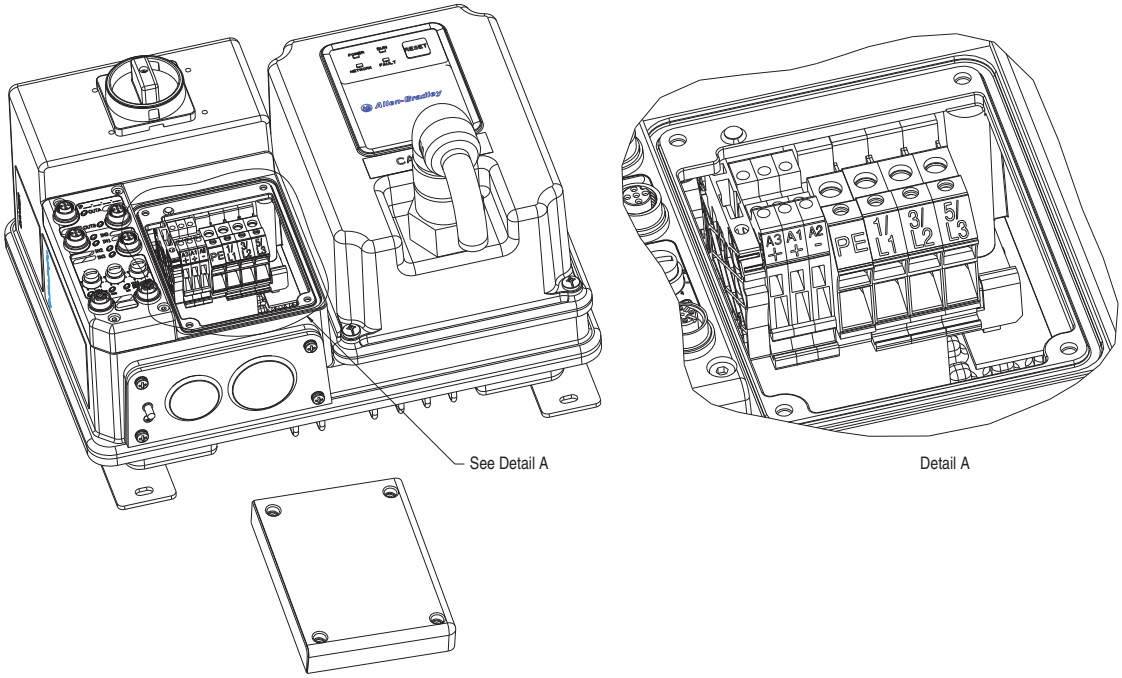

Table 4 - Power, Control, and Ground Terminal Designations

Terminal Designations	No. of Poles	Description
A1 (+)	2	Control Power Input
A2 (–)	2	Control Power Common
A3 (+)	2	Unswitched 24V Control
PE	2	Ground
1/L1	2	Line Power Phase A
3/L3	2	Line Power Phase B
5/L5	2	Line Power Phase C

Control Power Wiring

ArmorStart EtherNet/IP controller uses 24V DC control power for communications and I/O. The control power terminal connections are labeled A1, A2, and A3. Switched power supplies the outputs. Unswitched power supplies logic power and sensor inputs.

24V DC Control Power

- 24V DC (–15%, +10%)
- A1 = Switched +V
- A2 = Common for both switched and unswitched (–V)
- A3 = Unswitched +V

Input and Output Characteristics

- 5-pin female connectors (M12)
- 4 fixed inputs (two per connector) – software selectable sink or source
- 2 sourcing outputs DC (solid-state) – (one per connector)

Input and Output Power Connection

- Sensor Power is sourced from +24V supplied from A3(+) and A2(–).
- Output power is sourced from +24V supplied from A1(+) and A2(–).
- Max. current per output point is 0.5 A and is not to exceed 1.0 A total

IMPORTANT Instantaneous capacitive inrush exists for less than 10 ms, that can exceed 20 A. The power supply must be capable of supporting this amount of instant power demand when multiple ArmorStart controllers are turned ON simultaneously. For supplies without this capacity, it is recommended to apply unswitched power (A3-A2) first and after a 2…4 second delay, apply switched power. If control power falls below 19V DC, there is a higher risk of communications issues or device faults.

ArmorStart Controller with EtherNet/IP Internal Wiring

Figure 19 - ArmorStart EtherNet/IP Bulletin 280E Controller with HOA Diagram

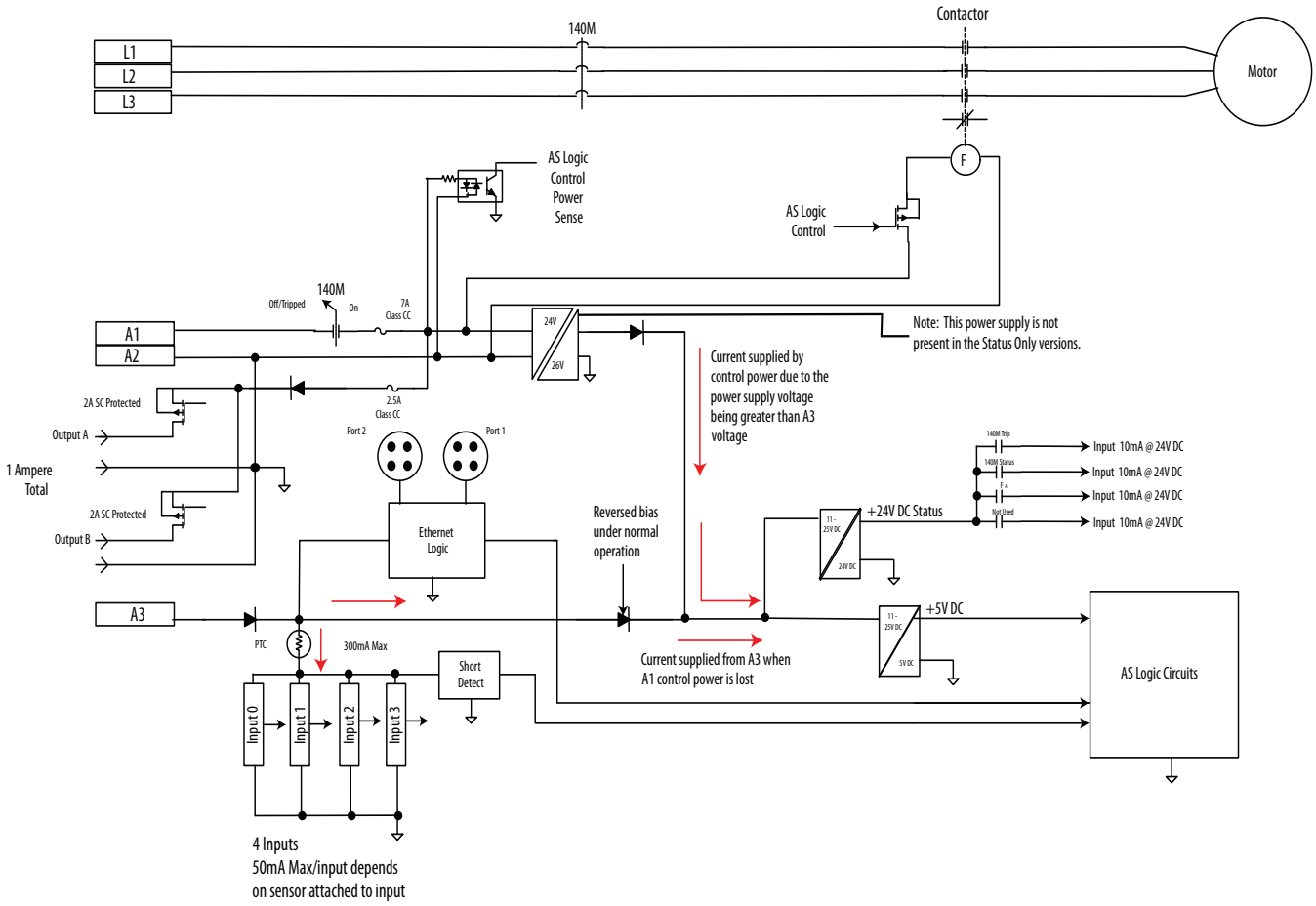

Figure 20 - ArmorStart EtherNet/IP Bulletin 281E Controller with HOA Diagram

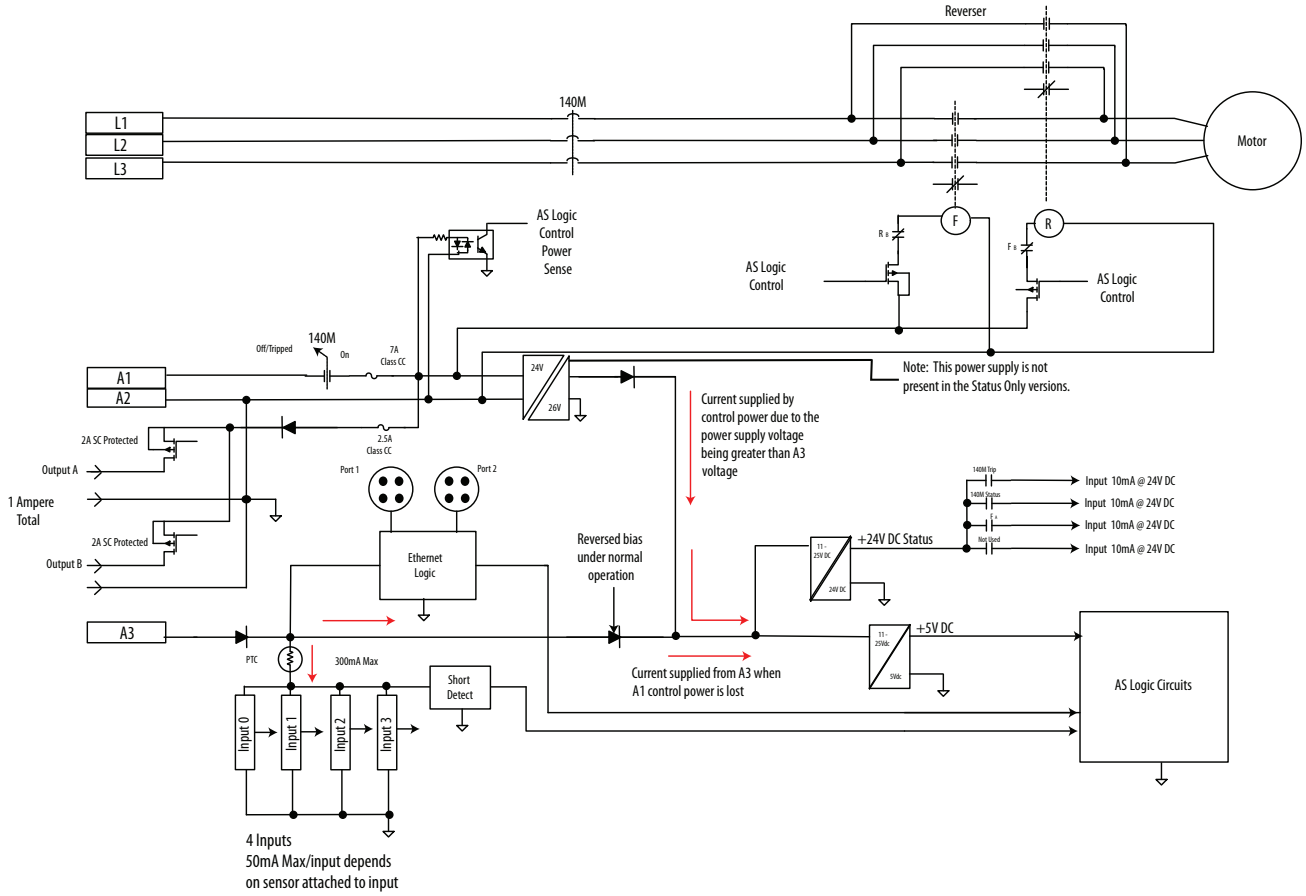

Figure 21 - ArmorStart EtherNet/IP Bulletin 284E Drive Diagram

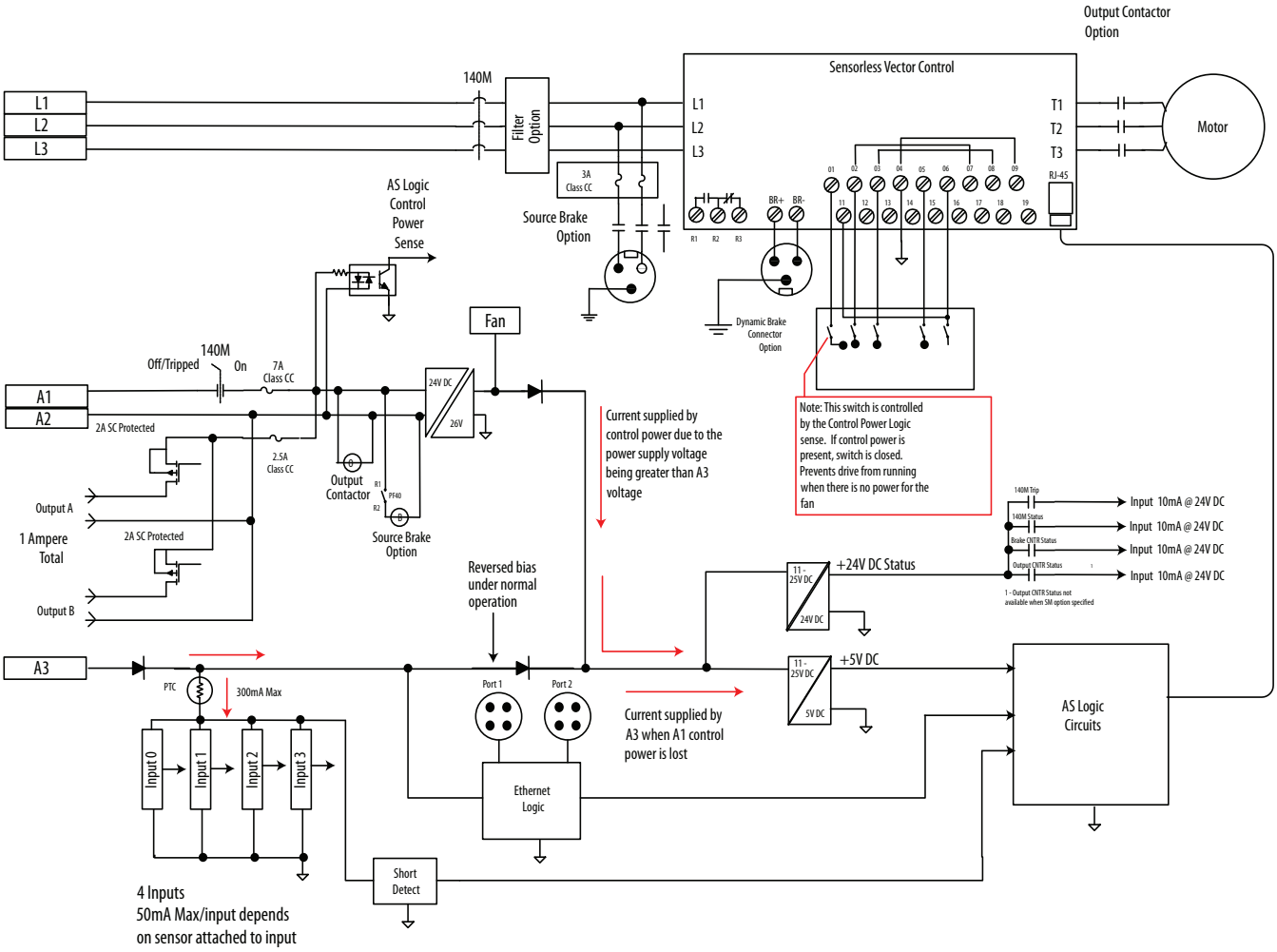

Recommended Cord Grips

Figure 22 - Cord Grips for ArmorStart Devices with 10 A Short Circuit Protection Rating



Figure 23 - Cord Grips for ArmorStart Devices with 25 A Short Circuit Protection Rating

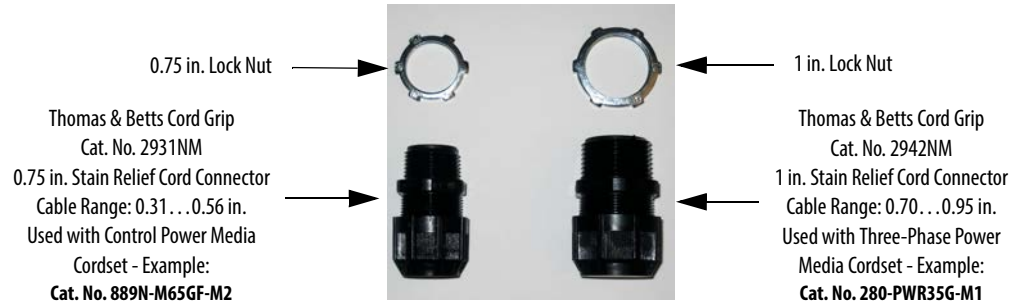

AC Supply Considerations for Bulletin 284E Units

Ungrounded and High Resistive Distribution Systems

ATTENTION: The Bulletin 284E contains protective Metal Oxide Varistors (MOVs) that are referenced to a ground. These devices should be disconnected if the Bulletin 284E is installed on an ungrounded and high resistive distribution system.

ATTENTION: Do not remove this jumper, that is shown in Figure 25, if the unit is equipped with an EMI filter installed.

Disconnecting MOVs

IMPORTANT Do not apply the EMI filter option to grounded or ungrounded Delta power source. The EMI option requires a solidly grounded Wye (Y) power source (i.e. 480/277 or 400/230V AC 3-Phase). If applied to a grounded or ungrounded 480V AC Delta power source, the EMI filter will not function properly and will be damaged.

To prevent drive damage, the MOVs connected to ground must be disconnected if the drive is installed on an ungrounded and high resistive distribution system where the line-to-ground voltages on any phase could exceed 125% of the nominal line-to-line voltage. To disconnect the MOVs, remove the jumper shown in Figure 25, Bulletin 284E Jumper Removal.

1. Before installing the Bulletin 284E, loosen the four mounting screws.
2. Unplug the control module from the base unit by pulling it forward.

Figure 24 - Bulletin 284E Removal of Control Module

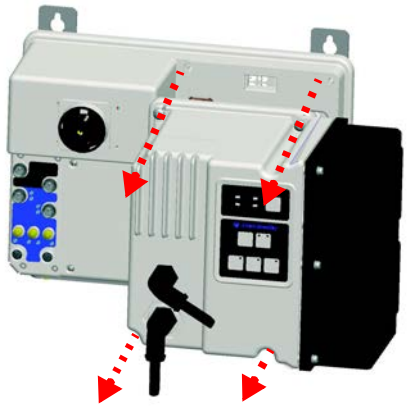

Figure 25 - Bulletin 284E Jumper Removal

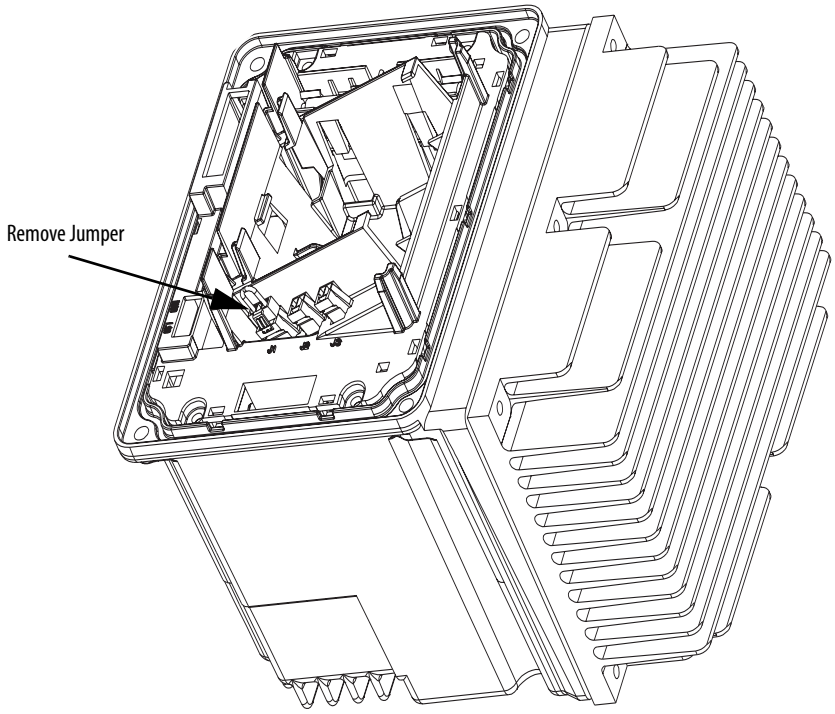

Group Motor Installations for USA and Canada Markets

The ArmorStart Distributed Motor controllers are listed for use with each other in group installations per National Fire Protection Association (NFPA) 79, Electrical Standard for Industrial Machinery. When applied according to the group motor installation requirements, two or more motors, of any rating or controller type, are permitted on a single branch circuit. Group motor installation has been successfully used for many years in the USA and Canada.

Note: For additional information regarding group motor installations with the ArmorStart Distributed Motor Controller, see Appendix A.

Wiring and Workmanship Guidelines

In addition to conduit and seal-tite raceway, it is acceptable to use cable that is dual rated Tray Cable Exposed Runs (TC-ER) and Cord, STOOW, for power and control wiring on ArmorStart installations. In the USA and Canada installations, the following guidance is outlined by the National Electrical Code (NEC) and NFPA 79.

In industrial establishments where the conditions of maintenance and supervision verify that only qualified persons service the installation, and where the exposed cable is continuously supported and protected against physical damage, using mechanical protection, such as struts, angles, or channels, Type TC tray cable that complies with the crush and impact requirements of Type MC (Metal Clad) cable and is identified for such use with the marking Type TC-ER (Exposed Run)❶ shall be permitted between a cable tray and the utilization equipment or device as open wiring. The cable shall be secured at intervals not exceeding 1.8 m (6 ft) and installed in a "good workman-like" manner. Equipment grounding for the utilization equipment shall be provided by an equipment grounding conductor within the cable.

❶ Historically, cable meeting these crush and impact requirements was designated and marked "Open Wiring". Cable so marked is equivalent to the present Type TC-ER and can be used.

While the ArmorStart controller is intended for installation in factory floor environments of industrial establishments, the following must be considered when locating the ArmorStart controller in the application:

- Cables, including those for control voltage including 24V DC and communications, are not to be exposed to an operator or building traffic on a continuous basis.
- Location of the ArmorStart controller to minimize exposure to continual traffic is recommended. If location to minimize traffic flow is unavoidable, other barriers to minimize inadvertent exposure to the cabling should be considered.
- Routing cables should be done in such a manner to minimize inadvertent exposure and/or damage.
- Additionally, if conduit or other raceways are not used, it is recommended that strain relief fittings be used when installing the cables for the control and power wiring through the conduit openings.

The working space around the ArmorStart controller may be minimized as the ArmorStart does not require examination, adjustment, servicing, or maintenance while energized. In lieu of this service, the ArmorStart controller is meant to be unplugged and replaced after proper lockout/tag-out procedures have been employed.

The Hand-Off-Auto (HOA) is a factory-installed option that the user may select. The HOA keypad may require the ArmorStart controller to be selected and installed as follows if the application requires frequent use of the hand operated interface by the equipment operator:

1. They are not less than 0.6 m (2 ft) above the servicing level and are within easy reach of the normal working position of the operator.
2. The operator is not placed in a hazardous situation when operating them.
3. The possibility of inadvertent operation is minimized.

If the operated interface is used in industrial establishments where the conditions of maintenance and supervision verify that only qualified persons operate and service the ArmorStart controller's operator interface, and the installation is located so that inadvertent operation is minimized, then other installation locations with acceptable access can be provided.

Other System Design Considerations

The user should keep 3-phase power cabling at least 150 mm (6 in.) away from the EtherNet/IP network to avoid noise issues. EtherNet/IP is an unpowered network therefore, if device status is important when the power distribution disconnect is in the OFF position, the A3 terminal must have an unswitched power source.

Electromagnetic Compatibility (EMC)

The following guidelines are provided for EMC installation compliance.

General Notes (Bulletin 284E only)

- The motor Cable should be kept as short as possible to avoid electromagnetic emission and also capacitive currents.
- Conformity of the drive with CE EMC requirements does not guarantee an entire machine installation complies with CE EMC requirements. Many factors can influence total machine/installation compliance.
- Using an EMI filter, with any drive rating, may result in relatively high ground leakage currents. Therefore, the filter must only be used in installations that are solidly grounded (bonded) to the building power distribution ground. Grounding must not rely on flexible cables and should exclude any form of plug or socket that would permit inadvertent disconnection. Some local codes may require redundant ground connections. The integrity of all connections should be periodically checked.
- When using a shielded motor cable the drain wire should be bonded to chassis ground at the motor. The recommended motor connection should use a shielded concentric connector. This provides 360° shielding. A single point connection can be used but is less effective.

Wiring

Wire in an industrial control application can be divided into three groups: power, control, and signal. The following recommendations for physical separation between these groups, are provided to reduce the coupling effect:

- Minimum spacing between different wire groups in the same tray should be 16 cm (6 in.).
- Wire runs outside an enclosure should be run in conduit or have shielding/armor with equivalent attenuation.
- Different wire groups should be run in separate conduits.
- Minimum spacing between conduits containing different wire groups should be 8 cm (3 in.).

Grounding

An effectively grounded product is one that is "intentionally connected to earth through a ground connection or connections of sufficiently low impedance and having sufficient current-carrying capacity to prevent the buildup of voltages that may result in undue hazard to connected equipment or to persons" (as defined by the US National Electric Code NFPA70, Article 100B). Grounding is done for two basic reasons: safety (defined above) and noise containment or reduction. While the safety ground scheme and the noise current return circuit may sometimes share the same path and components, they should be considered different circuits with different requirements.

Grounding Safety Grounds

The object of safety grounding is to verify that all metalwork is at the same ground (or Earth) potential at power frequencies. Impedance between the drive and the building scheme ground must conform to the requirements of national and local industrial safety regulations or electrical codes. These vary based on country, type of distribution system and other factors. Periodically check the integrity of all ground connections.

General safety dictates that all metal parts are connected to earth with separate copper wire or wires of the appropriate gauge. Most equipment has specific provisions to connect a safety ground or PE (protective earth) directly to it.

Grounding PE or Ground

The safety ground - PE, must be connected to earth ground. This point must be connected to adjacent building steel (girder, joist), a floor ground rod, bus bar, or building ground grid. Grounding points must comply with national and local industrial safety regulations or electrical codes. Some codes may require redundant ground paths and periodic examination of connection integrity.

IMPORTANT	To avoid electrolytic corrosion on the external earth terminal, avoid spraying moisture directly on the terminal. When used in washdown environments apply a sealant or other corrosion inhibitor on the external ground terminal to minimize any negative effects of galvanic or electro-chemical corrosion. Ground connections should be inspected regularly.

Shield and Grounding of Motors and Motor Cables

The motor frame or stator core must be connected directly to the PE connection with a separate ground conductor. It is recommended that each motor frame be grounded to building steel at the motor.

Motor Cable Considerations

Most recommendations regarding motor cable address issues are caused by the nature of the drive output. A PWM drive creates AC motor current by sending DC voltage pulses to the motor in a specific pattern. These pulses affect the wire insulation and can be a source of electrical noise. The rise time, amplitude, and frequency of these pulses must be considered when choosing a wire/cable type. The choice of cable must consider:

1. The effects of the drive output once the cable is installed
2. The need for the cable to contain noise that is caused by the drive output
3. The amount of cable charging current available from the drive
4. Possible voltage drop (and subsequent loss of torque) for long wire runs

Keep the motor cable lengths less than 13.7 m (45 ft) unless otherwise noted in the device specifications.

Unshielded Cable

Properly designed multi-conductor cable can provide good performance in wet applications, significantly reduce voltage stress on wire insulation, and reduce cross coupling between drives.

The use of cables without shielding is generally acceptable for installations where electrical noise created by the drive does not interfere with the operation of other devices such as: communications cards, photoelectric switches, weigh scales, and others. Be certain the installation does not require shielded cable to meet specific EMC standards for CE, C-Tick, or FCC. Cable specifications depend on the installation type.

Figure 26 - Unshielded Multi-Conductor Cable

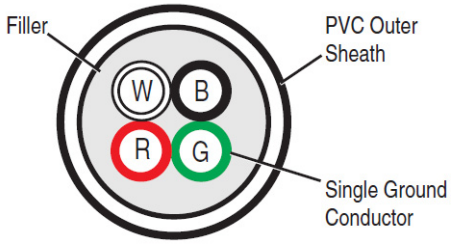

Shielded Cable

Shielded cable contains all general benefits of multi-conductor cable with the added benefit of a copper braided shield that can contain much of the noise that is generated by a typical AC Drive. Strong consideration for shielded cable should be given for installations with sensitive equipment such as weigh scales, capacitive proximity switches, and other devices that may be affected by electrical noise in the distribution system. Applications with large numbers of drives in a similar location, imposed EMC regulations, or a high degree of communications/ networking are also good candidates for shielded cable.

An acceptable shielded cable has four XLPE insulated conductors with a 100% coverage foil and an 85% coverage copper braided shield (with drain wire) surrounded by a PVC jacket.

Figure 27 - Shielded Cable with Four Conductors

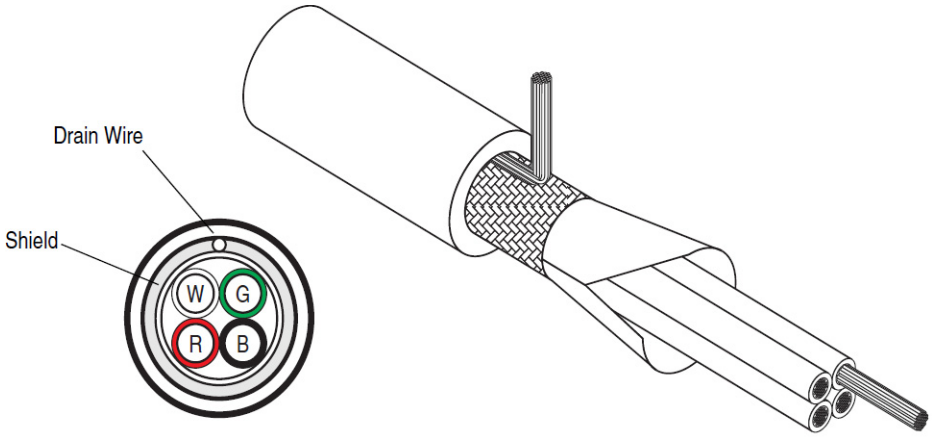

Shield Terminating Connectors

The cable connector that is selected must provide good, 360° contact and low transfer impedance from the shield or armor of the cable to the conduit entry plate at both the motor and the ArmorStart controller for electrical bonding. SKINTOP® MS-SC/MS-SCL cable grounding connectors and NPT/PG adapters from LAPPUSA are good examples of this type of shield terminating gland.

Figure 28 - Terminating the Shield with a Connector

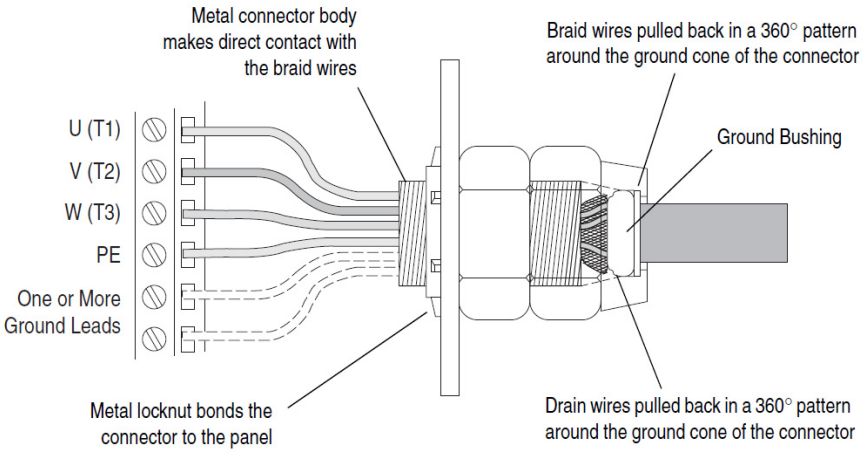

ATTENTION: Shielded connector or motor cable is mandatory for CE compliant installations

ArmorConnect Power Media

Description

Details of ArmorConnect Power Media are described in Publication 280PWR-SG001, *ArmorConnect Power and Control Media*.

The ArmorConnect power media offers both three-phase and control power cable cord set systems including patchcords, receptacles, tees, reducers and accessories to be used with the ArmorStart Distributed Motor Controller. These cable system components allow quick connection of ArmorStart Distributed Motor Controllers, reducing installation time. They provide for repeatable, consistent connection of the three-phase and control power to the ArmorStart Distributed Motor Controller and motor by providing a plug-and-play environment that also avoids system mis-wiring.

IMPORTANT ArmorConnect connections should be made hand tight. See the ArmorConnnect instructions for recommended tightening torque. The use of a tool to help in the tightening of the connector is not recommended.

When specifying power media for use with the ArmorStart Distributed Motor Controllers (Bulletins 280E, 281E, and 284E), use only motor and power cables that are listed for use with ArmorStart.

ArmorConnect power cables are UL 2237 Listed.

IMPORTANT The ArmorStart UL listing does not permit using a third party or un-listed motor and power cable assembly. Using a cable assembly that is not permitted results in a loss of Listing and does not comply with NFPA 79 or the NFPA 70 (NEC) (see 110.3(B) of the NEC).

For reference, the UL White Book states the following for power media cable assemblies meeting UL 2237 standard:

"These devices are intended for use only with the Listee's same line of products that are covered under this category...."



SHOCK HAZARD: Risk of electrical shock. Do not disconnect or connect power cables under load.



ATTENTION: ArmorConnect cables are not intended to be connected or disconnected under load. This may result physical injury or equipment damage as a result of high make and break currents and potential fault currents.

See publication 280PWR-SG001 for ordering details. The following shows example configurations for power, control, and communication media.

Figure 29 - Cable System Overview

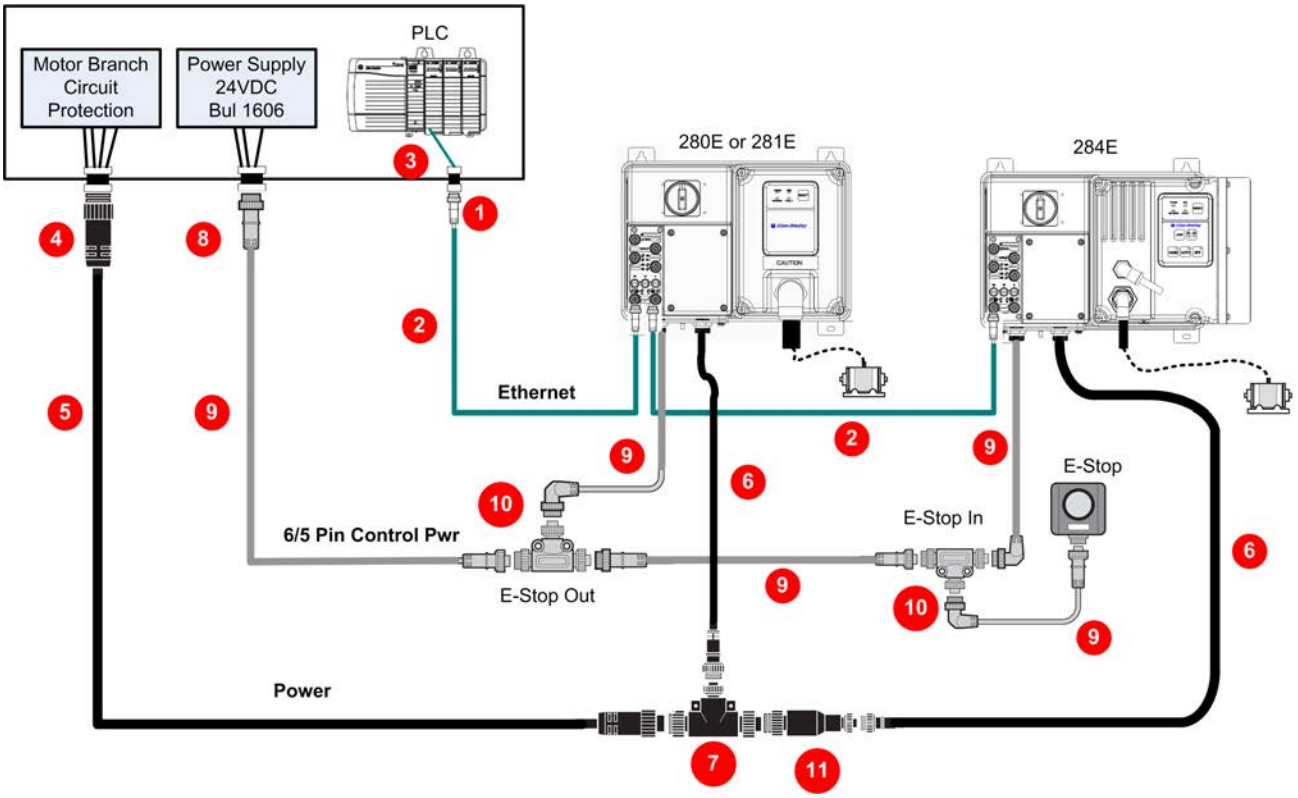

❶ CAT5e Bulkhead Connector and Receptacle – Example **Cat.No. 1585A-DD4JD**

❷ CAT5e Patchcord, IP67, M12 D-Code, Male Straight, Male Right Angle – Example **Cat.No. 1585D-M4TBDE-***

❸ CAT5e, Patch Cable, IP20, RJ45 Male to RJ45 Male – Example **Cat.No. 1585J-M4TB-***

❹ Three-Phase Power Receptacles -
Female receptacles are a panel mount connector with flying leads – Example **Cat. No. 280-M35F-M1**

❺Three-Phase Power Trunk- Patchcord cable with integral female or male connector on each end – Example **Cat. No. 280-PWR35A-M***

❻Three-Phase Drop Cable- Patchcord cable with integral female or male connector on each end – Example **Cat. No. 280-PWR22A-M* (16AWG)** or **Cat. No. 280-PWR24A-M* (14AWG)**

❼Three-Phase Power Tee connects to a single M35 drop line to trunk connectors – **Cat. No. 280-T35** or Tee connects to a M22 drop – **Cat. No. 280-RT35**

❽ Control Power Receptacles - Female receptacles are a panel mount connector with flying leads – **Cat. No. 888N-D65AF1-***

❾ Control Power Media Patchcords – Patchcord cable with integral female or male connector on each end – Example **Cat. No. 889N-F65GFNM-***

❿ Control Power Tees - The E-stop In Tee (**Cat. No. 898N-653ST-NKF**) is used to connect to the Bulletin 800F On-Machine™ Stop station using a control power media patchcord. The E-stop Out tee (**Cat. No. 898N-653ES-NKF**) is used with cordset or patchcord to connect to the ArmorStart Distributed Motor Controller.

⓫Reducer connects from M35 male connector to M22 female connector – **Cat. No. 280-RA35**

ArmorConnect Connections

Control Power Overview Using 6/5 Pin Control

Figure 30 - ArmorConnect Receptacles

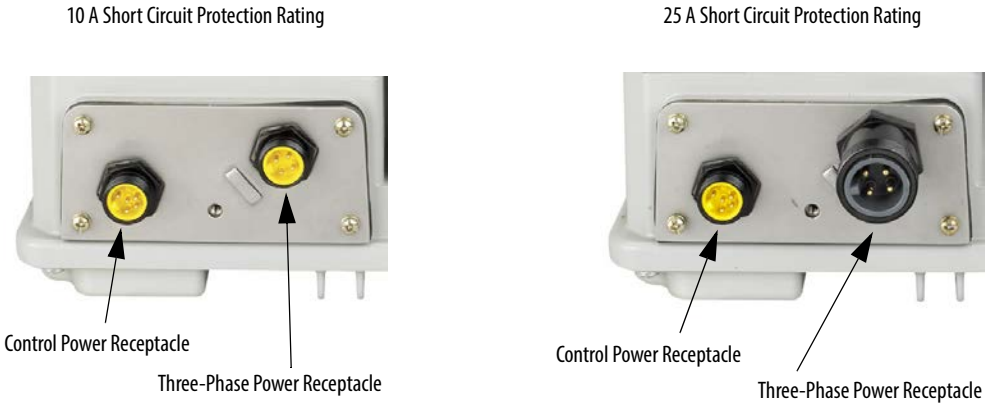

Factory-installed ArmorConnect gland plate connections

Figure 31 - ArmorConnect Connections

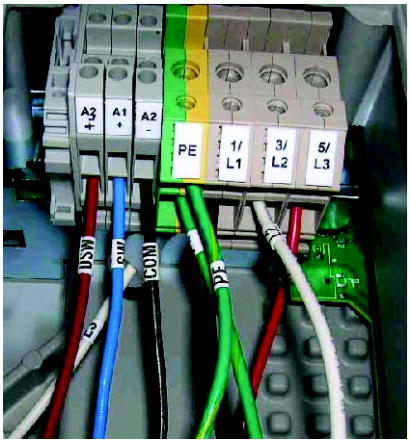

Table 5 - ArmorConnect Gland Plate Conductor Color Code

Terminal Designations	Description	Color Code
A1 (+)	Control Power Input	Blue
A2 (–)	Control Power Common	Black
A3 (+)	Unswitched Control Power	Red
PE	Ground	Green/Yellow
1/L1	Line Power – Phase A	Black
2/L2	Line Power – Phase B	White
3/L3	Line Power – Phase C	Red

Figure 32 - On-Machine Stop Stations



Table 1 Product Selection

Enclosure Type	Quick Connect	Knockout Type	Operator	Illumination Voltage	Contact Configuration	Cat. No.
Plastic	Mini Receptacle	Metric	Twist to Release	24V AC/DC	1 N.C./1 N.O.	800F-1YMQ4
Metal				24V AC/DC		800F-1MYMQ4

Figure 33 - Stop Circuit for EtherNet/IP Version

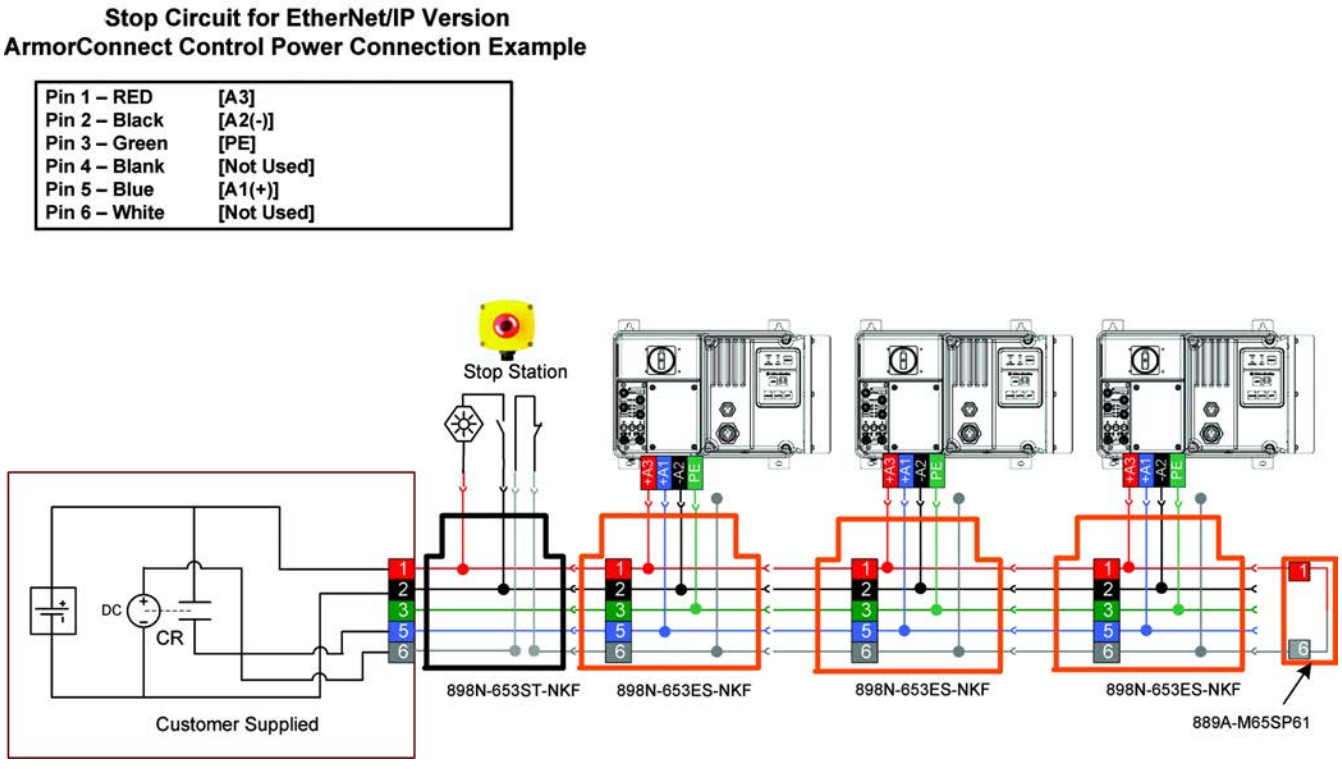

Control Power using 4-Pin Auxiliary Power Tee Adapter

As an alternative to the unique 6/5 pin control cable the auxiliary power cabling can be used. Auxiliary Power is based on a 4–pin connector system and is used to provide 24V DC power to I/O modules and other devices separately from network power. Running separate power to these devices is typically used for I/O devices with output connections to prevent power supply interruption due to switching of outputs.

Figure 34 - Control Power Overview using 4-Pin Auxiliary Power Tee Adapter

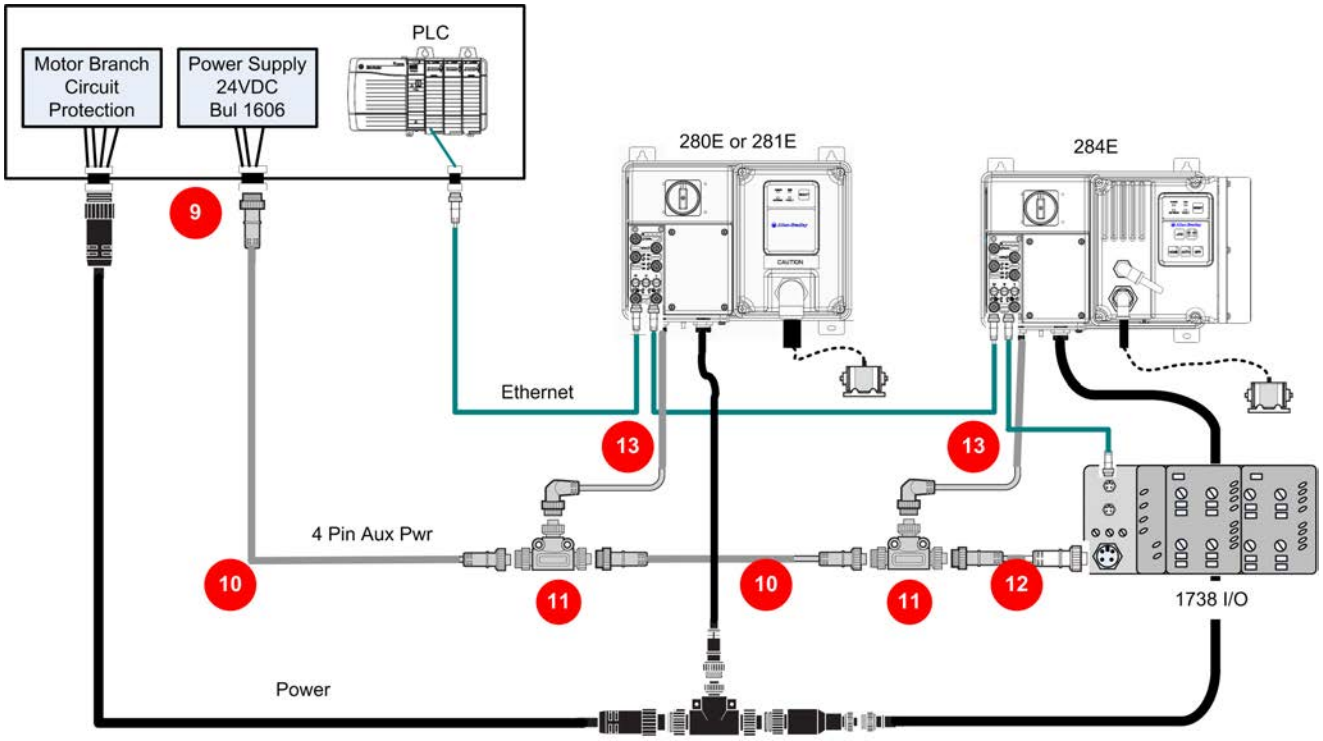

❾ Bulkhead pass-thru connectors are passive male to female 4-pin mini connectors within a threaded metal housing that is used for Auxiliary Power - **Cat. No. 889A-CXN4-M4**

❿Auxiliary power trunk cables are four-pin mini-style patchcords. - **Cat. No. 889N-F4HKNM-*** (Straight Female to Straight Male)

⓫ ArmorStart auxiliary adapter power tees allow connecting devices to the power trunk line using an associated power drop cordset - **Cat. No. 898N-543ES-NKF**

⓬ Auxiliary power drop cable - **Cat. No. 889D-R4HJDM-*** (18AWG wire Right Female to Straight Male)

⓭Control Power Media Patchcords - Example **Cat. No. 889N-F65GFNM-***

Figure 35 - Interconnect Diagram

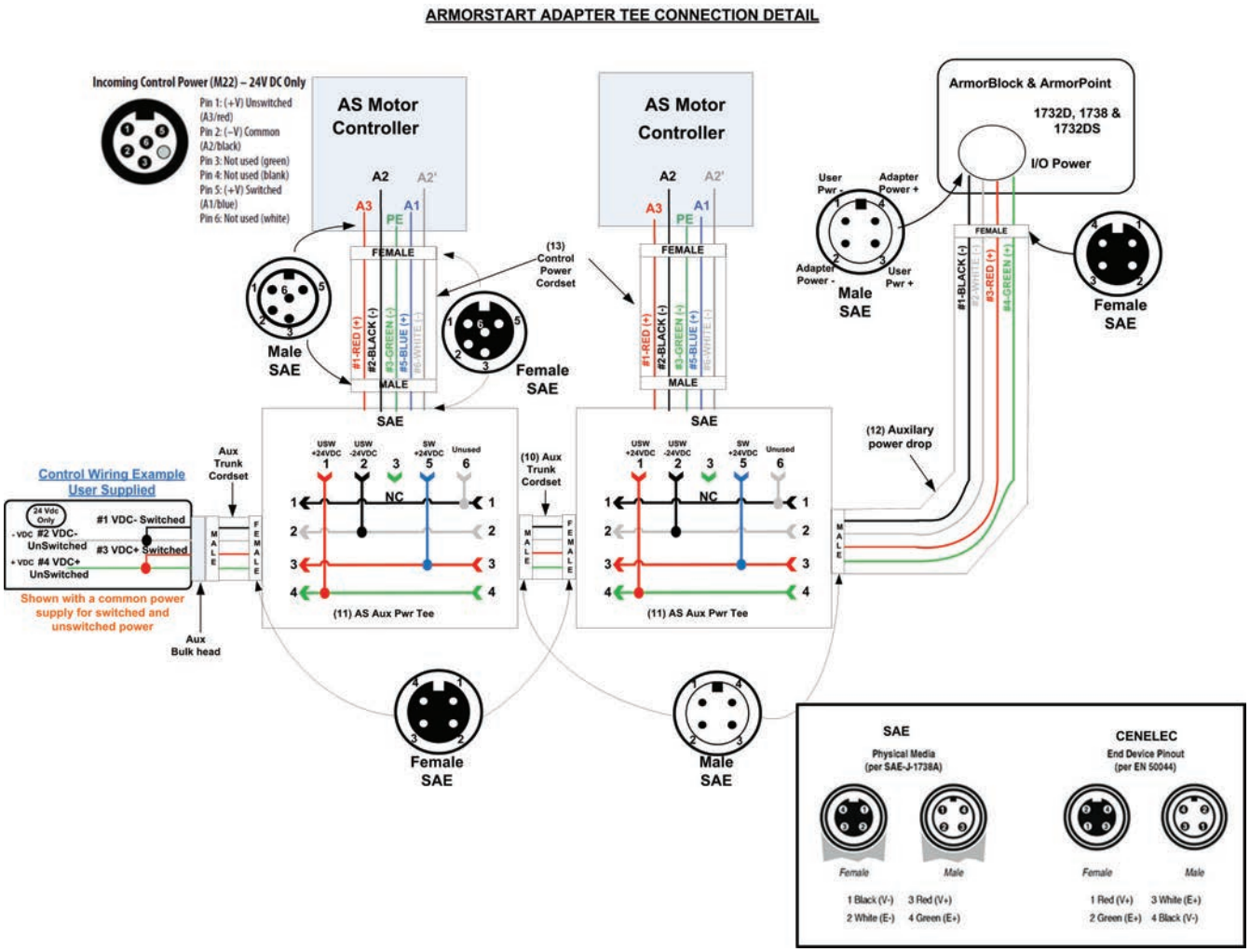

ArmorConnect Cable Ratings

The ArmorConnect power media cables are rated per UL Type TC 600V 90°C Dry 75°C Wet, Exposed Run (ER) or MTW 600V 90°C or STOOW 105°C 600V - Canadian Standards Association (CSA) STOOW 600V FT2. For additional information regarding ArmorConnect power media see publication 280PWR-SG001.

Branch Circuit Protection Requirements for ArmorConnect Three-Phase Power Media

When using ArmorConnect three-phase power media, fuses or circuit breakers can be used for the motor branch circuit protective device, for the group motor installations.

For 32 A rated ArmorConnect cable for trunk and taps:

Circuit Breaker: Suitable for use on a circuit capable of delivering not more than 65 000 RMS symmetrical amperes at 480V AC maximum when protected by a Bulletin 140U-H or Bulletin 140G-H circuit breaker, not rated more than 480V, 100 A and a maximum interrupting of 65 000 RMS symmetrical amperes Short Circuit Current Rating (SCCR). Examples include 140G-H6F3-D10 or 140U-H6C3-D10.

Fusing: Suitable for use on a circuit capable of delivering not more than 65 000 RMS symmetrical amperes (SCCR) at 600V AC maximum when protected by CC, J, and T class fuses.

For 10 A and 15 A rated ArmorConnect cable taps:

Circuit Breaker: Suitable for use on a circuit capable of delivering not more than 45 000 RMS symmetrical amperes at 480Y/277V AC maximum when protected by Cat. No. 140U-D6D3-C30 circuit breaker, not rated more than 480V, 30 A, having an interrupting rating not more than 45 000 RMS symmetrical amperes.



WARNING: The total circuit impedance including each cable assembly's own impedance, must be low enough to ensure any short-circuit or ground fault current that can flow through any assembly, is large enough to operate the magnetic trip of the Cat. No. 140U-D63-C* circuit breaker. See your local electrical code for acceptable practices for this evaluation.

Fusing: Suitable for use on a circuit capable of delivering not more than 65 000 RMS symmetrical amperes (SCCR) at 600V AC maximum when protected by CC, J, and T class fuses, rated 40 A non-time delay or 20 A time delay.

Ethernet and I/O Connections

ArmorStart EtherNet/IP controller uses a sealed D-coded M12 (micro) style ethernet connector.

Figure 36 - EtherNet/IP Connector



M12 Female Ethernet Connector

(view into connector)
Pin 1 - (White/Orange) TxData+
Pin 2 - (White/Green) RecV Data+
Pin 3 - (Orange) TxData-
Pin 4 - (Green) RecV Data-

Figure 37 - I/O Receptacle Input Pinout (M12)



Pin 1 - +24V (A3 pwr)
Pin 2 - Input 1
Pin 3 - Common
Pin 4 - Input 2
Pin 5 - NC (no connection)

Figure 38 - I/O Receptacle Output Pinout (M12)



Pin 1 - NC (no connection)
Pin 2 - NC (no connection)
Pin 3 - Common
Pin 4 - Output +24V DC (A1 pwr)
Pin 5 - NC (no connection)

Power Connections

Figure 39 - External Connections for Motor Connector – Bulletin 284E - 5 Hp and Bulletin 280E, 281E - 3 Hp or less (M22) at 480V AC

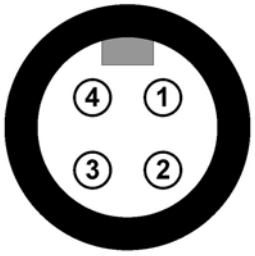

Pin 1 - T1 (black)
Pin 2 - T2 (white)
Pin 3 - T3 (red)
Pin 4 - Ground (green/yellow)

Figure 40 - External Connections for Motor Connector – Bulletin 280E, 281E - 10 Hp (M35) at 480V AC

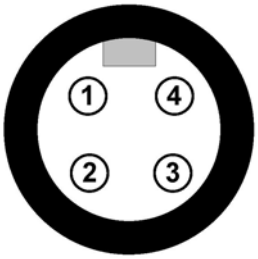

Pin 1 - T1 (black)
Pin 2 - Ground (green/yellow)
Pin 3 - T3 (red)
Pin 4 - T2 (white)

Figure 41 - External Connections for Brake Contactor Connector (M25)



Pin 1 - L1 (black)
Pin 2 - Ground (green/yellow)
Pin 3 - L2 (white)

Figure 42 - External Connections for Dynamic Brake Connection (M22)

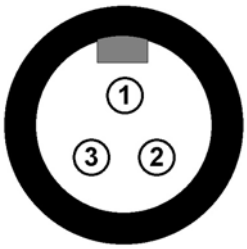

Pin 1 - Ground (green/yellow)
Pin 2 - BR+ (black)
Pin 3 - BR– (white)

Figure 43 - Incoming Control Power (M22) – 24V DC Only



Pin 1 - +24V DC unswitched (A3/red)
Pin 2 - Common (A2/black)
Pin 3 - PE (green)
Pin 4 - Not used (blank)
Pin 5 - +24V DC switched (A1/blue)
Pin 6 - Not used (white)

Figure 44 - Incoming Three-Phase Power for 10 A Short Circuit Protection (M22)



Pin 1 - L1 (black)
Pin 2 - L2 (white)
Pin 3 - L3 (red)
Pin 4 - Ground (green/yellow)

Figure 45 - Incoming Three-Phase Power for 25 A Short Circuit Protection (M35)



Pin 1 - L1 (black)
Pin 2 - Ground (green/yellow)
Pin 3 - L3 (red)
Pin 4 - L2 (white)

Optional Locking Clip

The clam shell design clips over the ArmorStart motor connector and motor cable to limit customer access from disconnecting the motor cable on the ArmorStart Distributed Motor Controller. The locking clip is an optional device that can be used, if desired. A locking clip is not available for the M25 Source Brake connection.

Figure 46 - Bulletin 280E, 281E Installation of Locking Clip

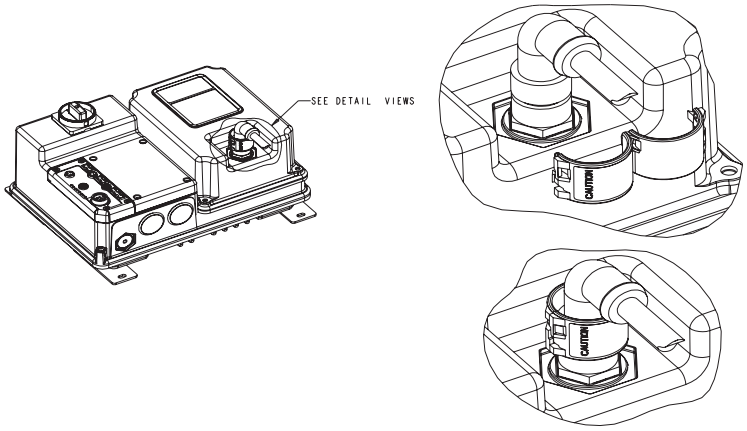

Figure 47 - Bulletin 284E Installation of Locking Clip

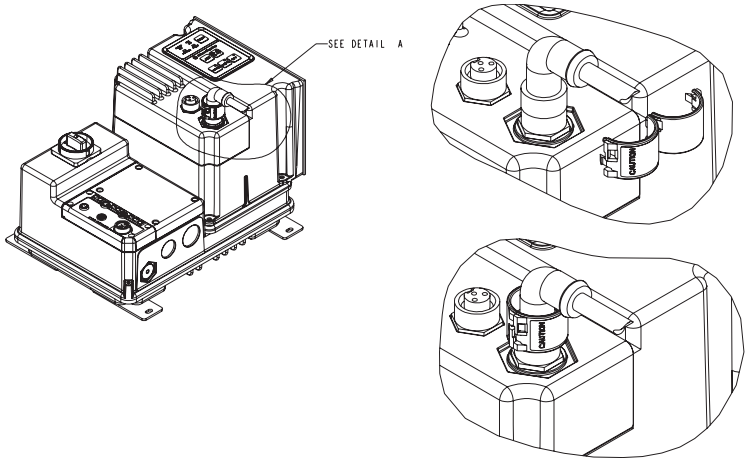

Maintenance

The ArmorStart controller does not require much regular maintenance. There are a few checks that are needed to verify continued proper operation. When using ArmorConnect media or conductors, verify that the connections remain tight where exposed to shock and vibration. Check that the heatsink allows good air flow. Bulletin 284 includes an internal circulating fan to support heat conduction in high ambient applications. This fan operates when control power is applied and cannot be controlled by any other means. Monitor the fan speed to receive early warning of fan failure. If the fan rpm falls below 1740, a Hardware Fault F14 is generated. Also in parameter 61, Last Pr Fault indicates a FAN RPM fault has occurred.

IMPORTANT	The FAN RPM fault can be reset with firmware 66.022 or later. The fault reset function is modified to allow normal operation for 24 hours before the fault reoccurs. The replacement fan is PN 284-FAN. Refer to Hardware Fault - Fan RPM Warning on page 235 for information regarding the monitoring of the Fan RPM

Introduction to EtherNet/IP and Device Level Ring Technology

Terminology

See the table for the meaning of common terms.

This Term	Means
Consumer	A destination device in the CIP networking model. See CIP.
CSMA/CD	Carrier sense multiple access/collision detection is the access method used in Ethernet. When a device wants to gain access to the network, it checks to see if the network is quiet (senses the carrier). If it is not, it waits a random amount of time before retrying. If the network is quiet and two devices access the line at exactly the same time, their signals collide. When the collision is detected, they both back off and each waits a random amount of time before retrying.
Determinism	The ability to predict when information will be delivered. Important in time-critical applications.
DHCP	The dynamic host configuration protocol is an Internet protocol, similar to BootP, for automating the configuration of computers that use TCP/IP. DHCP can be used to automatically assign IP addresses, to deliver IP stack configuration parameters, such as the subnet mask and default router, and to provide other configuration information, such as the addresses for printer, time, and news servers.
DNS	The domain name system is a hierarchical, distributed method of organizing the name space of the Internet. The DNS administratively groups hosts into a hierarchy of authority that allows addressing and other information to be widely distributed and maintained. A significant advantage to the DNS is that using it eliminates dependence on a centrally maintained file that maps host names to addresses.
Ethernet	A physical layer standard using carrier sense multiple access with collision detection (CSMA/CD) methods.
EtherNet/IP	Ethernet industrial protocol applies a common industrial protocol (CIP) over Ethernet by encapsulating messages in TCP/UDP/IP.
Ethernet network	A local area network that is designed for the high-speed exchange of information between computers and related devices.
Explicit messaging	Non-time critical messaging that is used for device configuration and data collection, such as downloading programs or peer-to-peer messaging between two PLC units.
Full duplex	A mode of communication that allows a device to send and receive information simultaneously, effectively doubling the bandwidth.

This Term	Means
Fully qualified domain name	A fully qualified domain name (FQDN) is a domain name that includes all higher level domains relevant to the entity named. If you think of the DNS as a tree-structure with each node having its own label, a fully qualified domain name for a specific node would be its label followed by the labels of all other nodes between it and the root of the tree. For example, for a host, a FQDN would include the string that identifies the particular host, plus all domains of which the host is a part, up to and including the top-level domain (the root domain is always null). For example, PARIS.NISC.SRI.COM is a fully qualified domain name for the host at 192.33.33.109.
Gateway	A module or set of modules that allows communications between nodes on dissimilar networks.
Hardware address	Each Ethernet device has a unique hardware address (sometimes called a MAC address) that is 48 bits. The address appears as six digits separated by colons (such as, xx:xx:xx:xx:xx:xx). Each digit has a value between 0 and 255 (0x00 to 0xFF). This address is assigned in the hardware and cannot be changed. The hardware address is required to identify the device if you are using a BOOTP utility.
Host name	The host name is the unique name for a computer within its domain. It's always the first element of a full name, and, with its domain and top-level domain suffix, creates the unique name of that computer on the Internet. For example, let's say a trading website is www.trading.com. The host name is www, which is not unique on the web, but is unique within the trading domain. The host name can also see the fully qualified domain name (FQDN), or in this example, www.trading.com. Both naming methods seem to be used interchangeably in various documents. For the purposes of this document, the host name sees the FQDN, or as in this example, www.trading.com.
Hub	A central connecting device that joins devices together in a star configuration. Hubs are generally not suitable for use in I/O control systems, since they are time-critical applications that cannot tolerate lost packets.
Implicit messaging	Real-time messaging of I/O data.
IP	Internet protocol that provides the routing mechanism for messages. All messages contain not only the address of the destination station, but the address of a destination network, that allows messages to be sent to multiple networks within an organization or around the world.
IP address	A 32-bit identification number for each node on an Internet Protocol network. These addresses are represented as four sets of 8-bit numbers (numbers from 0 to 255), with decimals between them. Each node on the network must have a unique IP address.
Latency	The time between initiating a request for data and the beginning of the actual data transfer.
Multicast	In the CIP producer/consumer model, one producer multicasts (broadcasts) the data once to all consumers.
Producer	The source of information in the CIP networking model. See CIP.

This Term	Means
Subnet mask	An extension of the IP address that allows a site to use a single net ID for multiple networks.
Switch	A network device that cross connects devices or network segments. A switch provides each sender/receiver the full network bandwidth (2x in full duplex mode), reduces collisions, and increases determinism.
TCP	The transport control protocol is a more reliable but slower transport protocol than UDP. It is used for explicit (not time critical) messaging in EtherNet/IP.

Introduction to EtherNet/IP

Automation architectures must provide users with three primary services:

- Control services involve the exchange of time-critical data between controlling devices and I/O devices.
- Networks must provide users configuration capabilities to set up and maintain their automation systems.
- Automation architecture must allow for collection of data.

EtherNet/IP, provides installation flexibility and leverages commercially available industrial infrastructure products. It is also compatible with other communication standards, such as Hypertext Transfer Protocol (HTTP), Simple Networks Management Protocol (SNMP), and Dynamic Host Configuration (DHCP).

EtherNet/IP is a CIP adaptation of TCP/IP that fully uses the IEEE standard. The relationship between the TCP/IP and CIP to form EtherNet/IP is shown in the ISO/OSI 7-layer model is shown in Figure 49. The OSI model is an ISO standard for network communications that define all functions from a physical layer to the protocol.

This diagram shows how Rockwell Automation EtherNet/IP communication modules fit into a control system.

Figure 48 - EtherNet/IP Communication Modules in a Control System

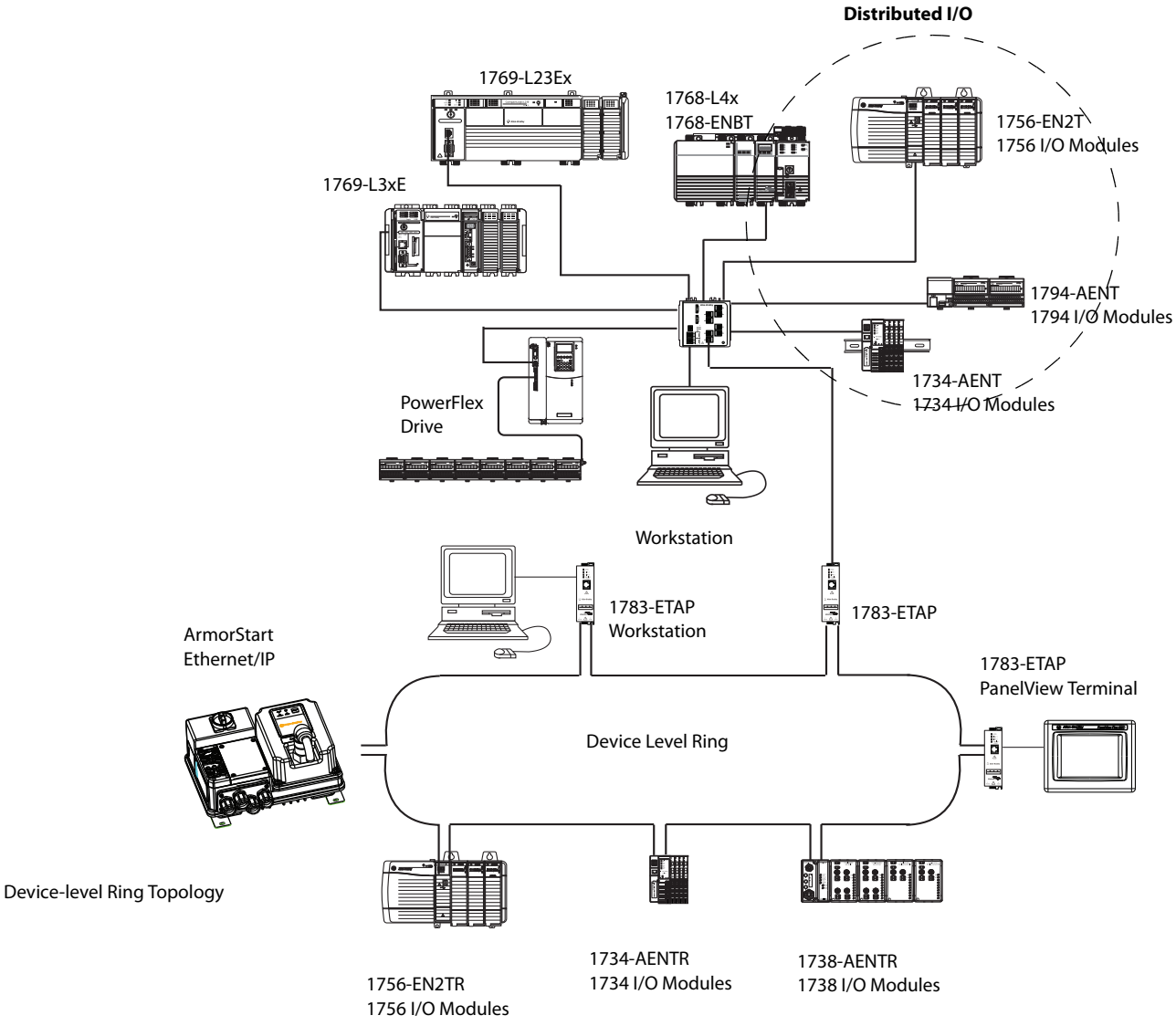

Figure 49 - OSI Model for ISO Standard for Network Communications

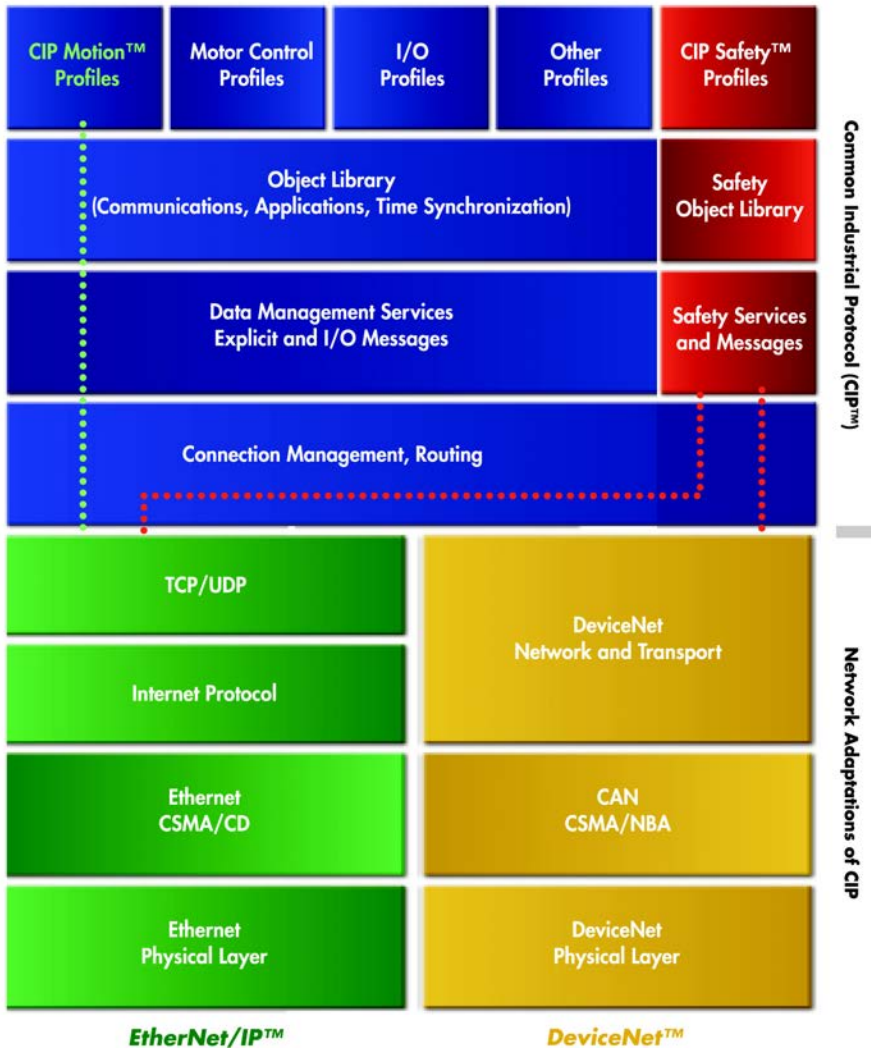

This approach provides real time technology into the Ethernet domain. With the network extensions of CIP Safety, CIP Sync, and CIP Motion, CIP networks allow for safety communication, time synchronization, and simple to high performance motion all over the same EtherNet/IP network.

Linear Network Introduction

A linear network is a collection of devices that are daisy-chained together.

Figure 50 - Linear Network Collection of Devices

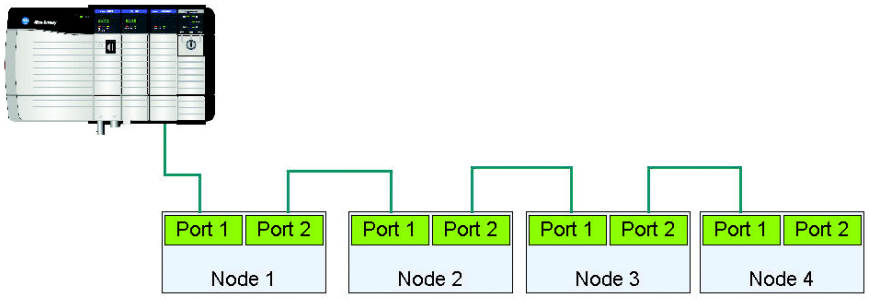

In this topology a communication issue in the media or device prevents nodes downstream from communicating.

Figure 51 - Communication Issue in the Media or Device Line

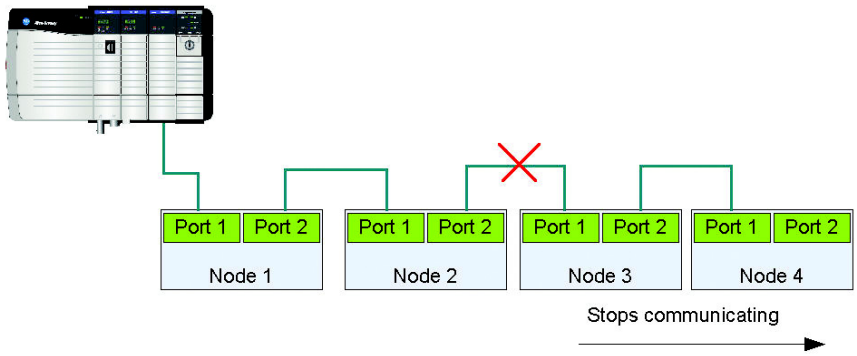

The EtherNet/IP embedded switch technology allows this topology to be implemented at the device level. No additional switches are required.

These are the primary advantages of a linear network:

- The network simplifies installation and reduces wiring and installation costs.
- The network requires no special software configuration.
- Embedded switch products offer improved CIP Sync application performance on linear networks.

The primary disadvantage of a linear network is that any break of the cable disconnects all devices downstream from the break from the rest of the network.

IMPORTANT Products with EtherNet/IP embedded switch technology have two ports to connect to a linear or DLR network in a single subnet.

You cannot use these ports as two Network Interface Cards (NICs) connected to two different subnets.

Device Level Ring

Introduction

A Device Level Ring (DLR) protocol defines a set of behaviors, see Figure 52. A ring supervisor keeps packets of information from circulating infinitely around the ring by blocking one of the ports. A beacon frame constantly is detected on both ring supervisor ports. If a beacon frame is not detected the supervisor detects the physical layer issue and reconfigures the network to a linear topology without the loss of any node communication or data. Once repaired the ring supervisor reconfigures back to ring mode.

Figure 52 - DLR Protocol

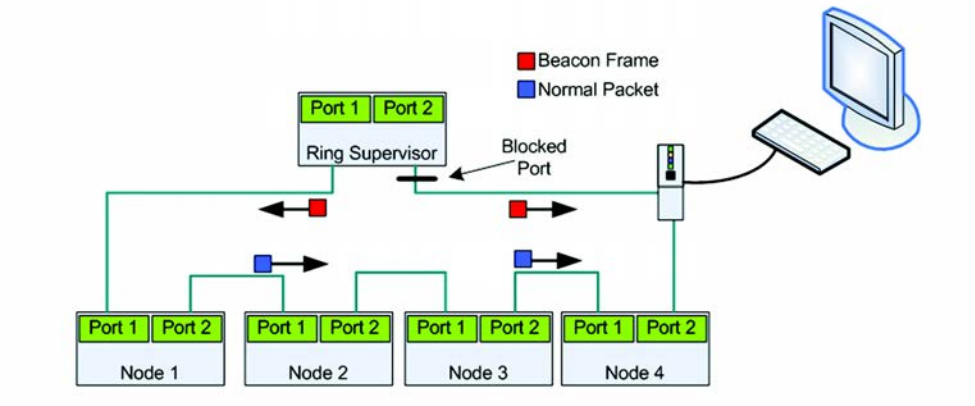

As shown in Figure 53, when a physical layer failure is detected the adjacent nodes to the fault generate a link status message that the ring supervisor acknowledges. The ring supervisor unblocks the port to allow communication. The neighboring nodes to the fault identify the fault and reconfigure themselves to support a linear topology. Now, both the ring supervisor and nodes are configured to support a linear topology.

Figure 53 - Physical Layer Failure is Detected

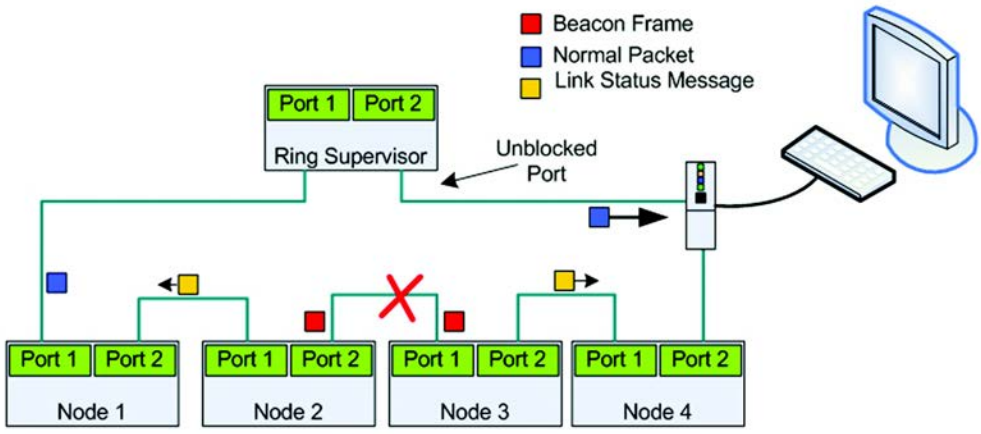

When the physical layer fault is corrected the supervisor will "hear" the beacon frame again on both ports. Once this is detected the ring supervisor re-establishes and configures the ring topology. All neighboring nodes detect this and reconfigure themselves back to ring. A DLR network is a single-fault tolerant network that is intended for the interconnection of automation devices.

At least one ring supervisor must be configured before a ring is formed.

IMPORTANT Any nodes that do not support DLR should not be directly connected to the ring.

The node should be connected to the ring through a switch that supports DLR.

The advantages of the DLR network include:

- Simple installation
- Resilience to a single point of failure on the network
- Fast recovery time when a single fault occurs on the network

The primary disadvantage of the DLR topology is the additional effort that is required to set up and use the network as compared to a linear or star network.

IMPORTANT Products with EtherNet/IP embedded switch technology have two ports to connect to a linear or DLR network in a single subnet.

You cannot use these ports as two Network Interface Cards (NICs) connected to two different subnets.

IMPORTANT ArmorStart EtherNet/IP cannot be configured as a ring supervisor.

Number of Nodes on a DLR Network

Rockwell Automation recommends that you use no more than 50 nodes on a single DLR or linear network. If your application requires more than 50 nodes, it is recommended that the DLR networks are segmented.

With smaller networks:

- There is better management of traffic on the network.
- The networks are easier to maintain.
- There is a lower likelihood of multiple faults.

Additionally, on a DLR network with more than 50 nodes, network recovery times from faults are higher. For DLR networks with 50 or less nodes, ring recovery time can be as low as 3 ms. If more than 50 nodes are required without segmentation, contact your local Allen-Bradley distributor. A detail review is recommended to ensure bandwidth and response time are within application requirements.

Ethernet Switches

Ethernet managed switches are key components that provide determinism and the required throughput to achieve automation needs. Switches are able to manage network traffic that reduces unnecessary delays or band width needs. A properly designed EtherNet/IP infrastructure that implement segregation via managed switch technology achieves a more reliable and secure network.

Ethernet Media

Today, unshield twisted pair (UTP) wiring is the standard in most applications and allows for greatest flexibility and ease of installation and maintenance. Category 5e (e-enhanced) cable is specifically designed to meet today's automation needs.

Standard RJ-45 connectors are not designed for industrial environments. For outside the panel, IP67 connectors are required for EtherNet/IP.

Figure 54 - Network Media - Ethernet M12 D-Code Media



EtherNet/IP General Wiring Guideline

Ethernet is found in automation equipment, panels, and components. There are a few guidelines, that if followed, will reduce the number of issues an EtherNet/IP application may experience.

- Many EtherNet/IP applications share the same space with power conductors. If the Ethernet media must cross power conductors, do so at right angles. This reduces the coupling effect and reduce the potential for communication noise.
- Where possible, route the Ethernet/IP media five feet or more from high voltage sources (for example, lights, ballasts, motors, ...) or sources of radio frequency, such as variable frequency drives.
- Ensure that the application or equipment follows industry acceptable grounding practices.
- Maintain media lengths between nodes to less than 100 m (328 ft). In today's environment, it may be challenging to maintain these guidelines, however these reduce potential application issues.

Requested Packet Interval

The Requested Packet Interval (RPI) is the update rate that is specified for a particular piece of data on the network. This value specifies how often to produce the data for that device. For example, if you specify an RPI of 50 ms, it means that every 50 ms the device should send data to the controller or the controller should send data to the device.

Only data-producing modules require an RPI. For example, a local EtherNet/IP communication module requires no RPI because it produces no data for the system. Instead it functions only as a bridge.

To set an RPI, follow these steps.

1. Verify the ArmorStart EtherNet/IP module AOP is installed, started, and connected to the controller.
2. In the Controller Organizer tree, right-click the ArmorStart EtherNet/IP module and choose Properties.

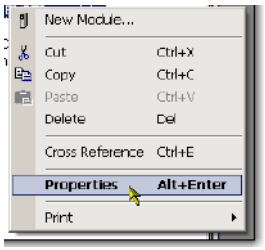

The Module Properties dialog box appears.

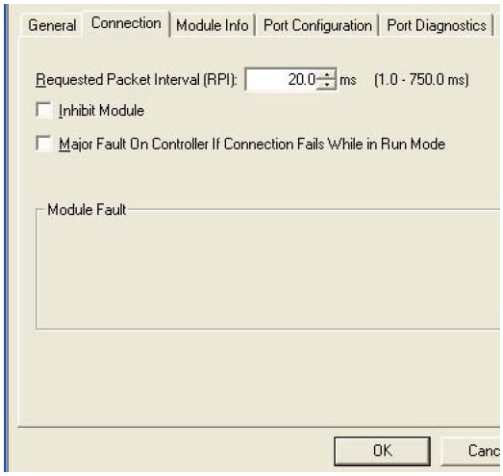

3. Click the Connection tab.
4. From the Requested Packet Interval (RPI) menu, enter the rate at which you want data to be updated over a connection.

   Only set the RPI to the rate the application requires.

IMPORTANT The RPI determines the number of packets per second that the module produces on a connection. Each module can produce only a limited number of packets per second. Exceeding this limit prevents the module from opening more connections.

5. Click OK.

Notes:

Product Commissioning

IP Address

The IP address identifies each node on the IP network (or system of connected networks). Each TCP/IP node on a network must have a unique IP address.

The IP address is 32 bits long and has a net ID part and Host ID part. Networks are classified A, B, C, (or other). The class of the network determines how an IP address is formatted.

Figure 55 - IP Address on the IP Network

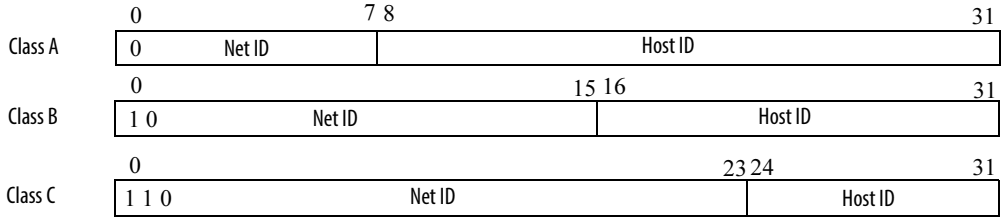

You can distinguish the class of the IP address from the first integer in its dotted-decimal IP address as follows:

Range of first integer	Class	Range of first integer	Class
0…127	A	192…223	C
128…191	B	224…255	other

There are reserved values that you cannot use as the first octet in the address. These numbers are examples of values you cannot use:

- 001.*xxx.xxx.xxx*
- 127.*xxx.xxx.xxx*
- 223 to 255.*xxx.xxx.xxx*

The specific reserved values that cannot be used vary according to the conditions of each application. The previous values are only examples of reserved values.

Each node on the same physical network must have an IP address of the same class and must have the same net ID. Each node on the same network must have a different Host ID thus giving it a unique IP address.

Gateway Address

A gateway connects individual physical networks into a system of networks. When a node needs to communicate with a node on another network, a gateway transfers the data between the two networks. This field is set to 0.0.0.0 by default.

Subnet Mask

Subnet addressing is an extension of the IP address scheme that allows a site to use a single network ID for multiple physical networks. Routing outside of the site continues by dividing the IP address into a net ID and a host ID via the class. Inside a site, the subnet mask is used to redivide the IP address into a custom network ID portion and host ID portion. This field is set to 0.0.0.0 by default.

If you change the subnet mask of an already-configured module, you must cycle power to the module for the change to take effect.

Configuring EtherNet/IP Address

Before using the ArmorStart, you may need to configure an IP address, subnet mask, and optional Gateway address. The rotary network address switches found on the I/O section of the ArmorStart are set to 999 and DHCP is enabled as the factory default. The ArmorStart reads these switches first to determine if the switches are set to a valid IP address between 1...254. When switches are set to a valid number the IP address will be 192.168.1._ _ _ [switch setting].

The IP address can also be set using DHCP.

- If DHCP is preferred, use Rockwell Automation BootP/DHCP utility, version 2.3 or later, that ships with RSLogix 5000 or RSLinx software.
- Or use a third party DHCP server.

This document assumes that the user has set the IP address to 192.168.1.1. The user can change this IP address to any address either statically or dynamically.



ATTENTION: To avoid unintended operation, the adapter must be assigned a fixed IP address. If a DHCP server is used, it must be configured to assign a fixed IP address for your adapter.

Failure to observe this precaution may result in unintended machine motion or loss of process control.

Manually Configure the Network Address Switches

Remove the protective caps from the rotary switches. Set the network address by adjusting the three switches on the front of the I/O module.

Figure 56 - Switches on the I/O Module

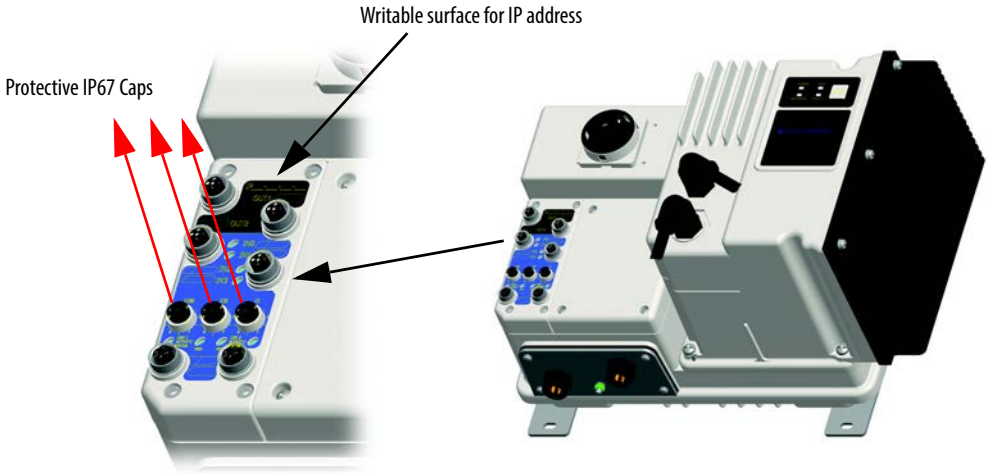

Figure 57 - Network Address Example

This example shows the IP address set to 163 for IP Address 192.168.1.163

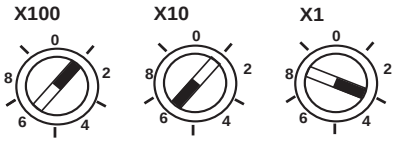

Valid IP address switch settings range from 001 to 254. When the switches are set to a valid number, the adapter's IP address will be 192.168.1.*xxx* (where *xxx* represents the number set on the switches; see Figure 57). The adapter's subnet mask is 255.255.255.0 and the gateway address is set to 0.0.0.0. A power cycle is required for any new IP address to take effect.

Note: The upper three octets are fixed. DHCP or the embedded webserver must be used to configure the IP address to a value other than 192.168.1.*xxx*.

If the switches are set to an invalid number (such as 000 or a value greater than 254), the adapter will check to see if DHCP is enabled. If DHCP is enabled, the adapter requests an address from a DHCP server. If DHCP is not enabled, the adapter will use the IP address (along with other TCP configurable parameters) stored in non-volatile memory.

IMPORTANT See Figure 58. The ArmorStart is shipped with the control module rotary switches set to a value of 99. **DO NOT modify this setting.** If these are changed and the unit stops responding, the switches will need to be manually set to node address 63 and power cycled.

Figure 58 - Rotary Switch on Control Module

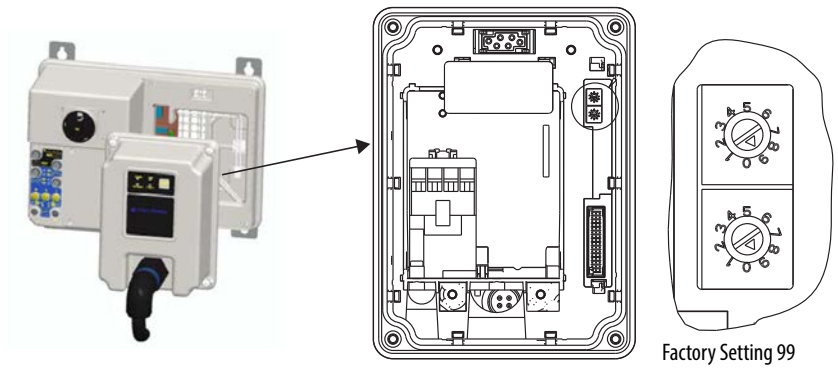

Use the Rockwell Automation BootP/DHCP Utility

The Rockwell Automation BootP/DHCP utility is a stand alone program that incorporates the functionality of standard BootP/DHCP software with a user-friendly graphical interface. It is located in the Utils directory on the RSLogix 5000 installation CD. The ArmorStart EtherNet/IP adapter must have DHCP enabled (factory default) to use the utility.

IMPORTANT ArmorStart EtherNet/IP does not support BootP.

To configure your adapter using the BootP/DHCP utility, perform the following steps:

1. Run the BootP/DHCP software.

   In the BootP/DHCP Request History panel the hardware addresses of the devices issuing BootP/DHCP requests are shown.

Figure 59 - BootP/DHCP Request History Panel

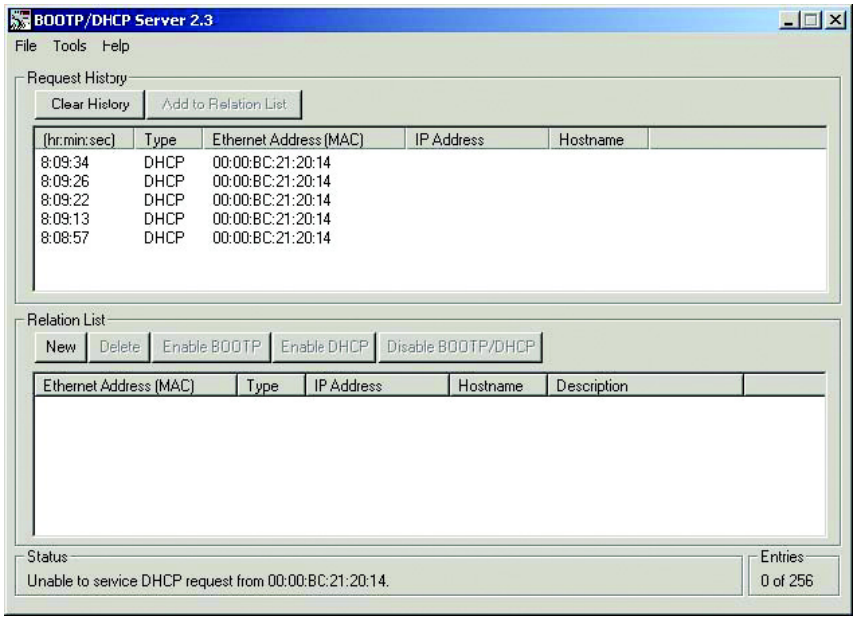

2. Double-click the hardware address of the device that you want to configure.

   The New Entry dialog with the device's Ethernet Address (MAC) is shown.

Figure 60 - New Entry Dialog Box

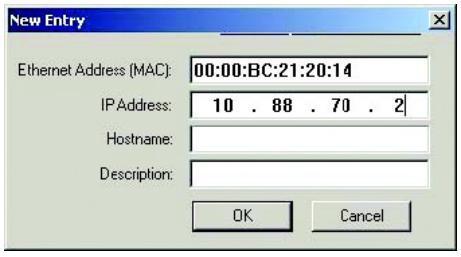

3. Enter the IP Address that you want to assign to the device, and click OK.

   The device is added to the Relation List, displaying the Ethernet Address (MAC) and corresponding IP Address, Hostname, and Description (if applicable).

Figure 61 - Relation List

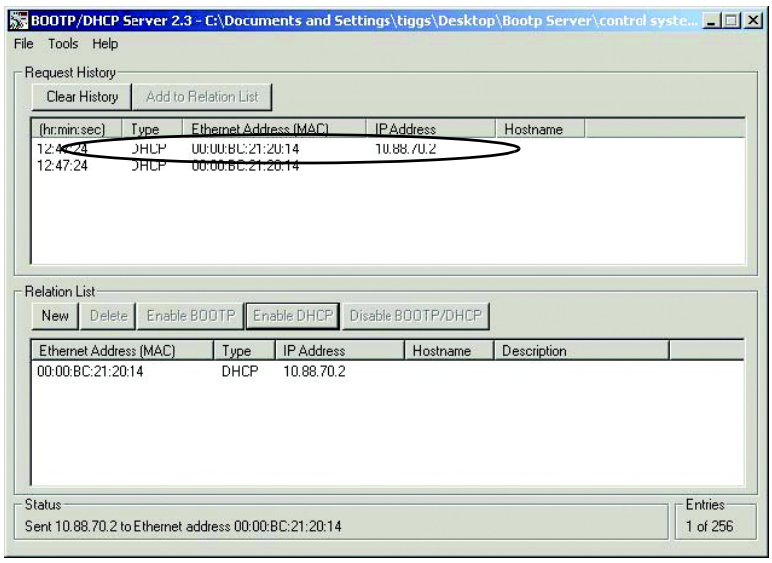

   When the address displays in the IP Address column in the Request History section, it signifies that the IP address assignment has been made.

4. To assign this configuration to the device, highlight the device in the Relation List panel, and click the Disable BOOTP/DHCP button.

   When power is cycled to the device, it uses the configuration you assigned and does not issue a DHCP request.

5. To enable DHCP for a device with DHCP disabled, highlight the device in the Relation List, and click the Enable DHCP button.

   You must have an entry for the device in the Relation List panel to re-enable DHCP.

Figure 62 - Enable DHCP Button

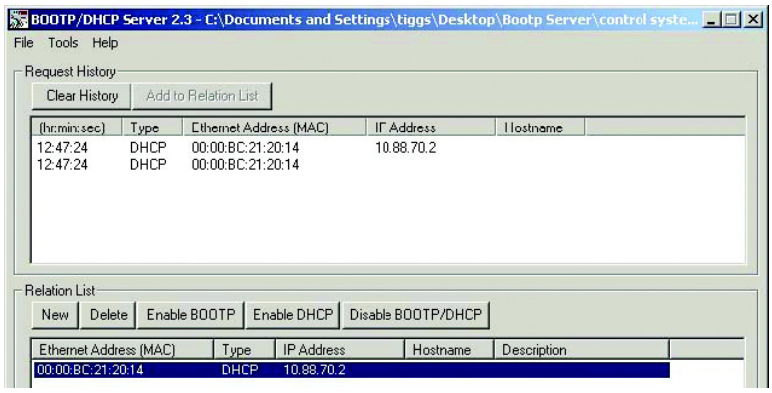

Save the Relation List

You can save the Relation List to use later. To save the Relation List perform the following steps:

1. Select Save As... from the File menu.

Figure 63 - Save the Relation List

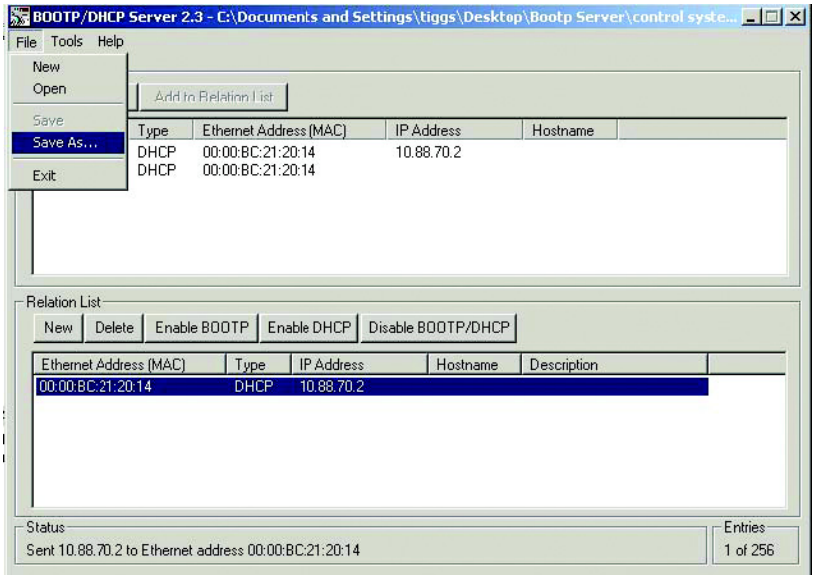

The Save As Dialog is shown.

Figure 64 - Save As Dialog Box

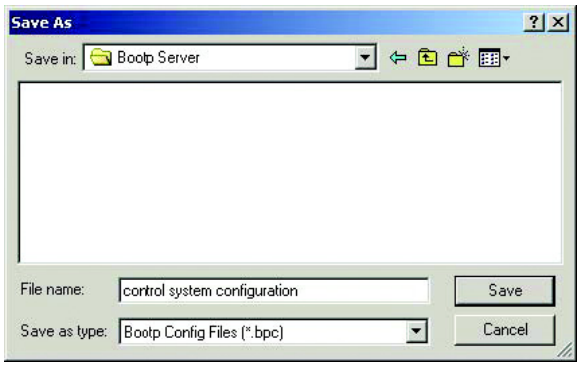

2. Select the folder that you want to Save in.
3. Enter a File name for the Relation List (for example, Control System Configuration), and click Save.

   You can leave the Save as type at the default setting: Bootp

   You can then open the file containing the Relation List at a later session.

DHCP IP Support

DHCP (Dynamic Host Configuration Protocol) software automatically assigns IP addresses to client stations logging onto a TCP/IP network.

When DHCP is enabled (factory default Enabled), the unit will request its network configuration from a DHCP/BOOTP server. Any configuration received from a DHCP server is stored in non-volatile memory.

ArmorStart EtherNet/IP remembers the last successful address if DHCP is enabled. The unit tries to obtain the same IP address from the DHCP server. If the server is not present (e.g., server fails to power up), the unit will use the IP address it previously received from the server. The DHCP timeout = 30 s.

Be cautious about using DHCP software to configure your adapter. A DHCP server typically assigns a finite lease time to the offered IP address. When 50% of the leased time has expired, the ArmorStart Ethernet adapter attempts to renew its IP address with the DHCP server. The possibility exists that the adapter will be assigned a different IP address, that would cause the adapter to cease communicating with the controller.

Using the Rockwell Automation Embedded Web Server

Internal Web Server

ArmorStart Ethernet/IP internal web server allows you to view information and configure the ArmorStart via a web browser. The embedded web server is used to access configuration and status data. Security in the form of an administrative password can be set. The default Login is Administrator. **There is no password set by default.**

IMPORTANT	The user should set the password to a unique value for authorized personnel. If the login and password are lost you will need to reset the device to the factory defaults, that results in losing its configuration.

To access the internal web browser, open your computers internet browser and enter the IP address of the desired ArmorStart (for example, 192.168.1.1).

Note: 192.168.1.1 is **NOT** the factory default IP address as DHCP is enabled by default.

Figure 65 - Internal Web Browser

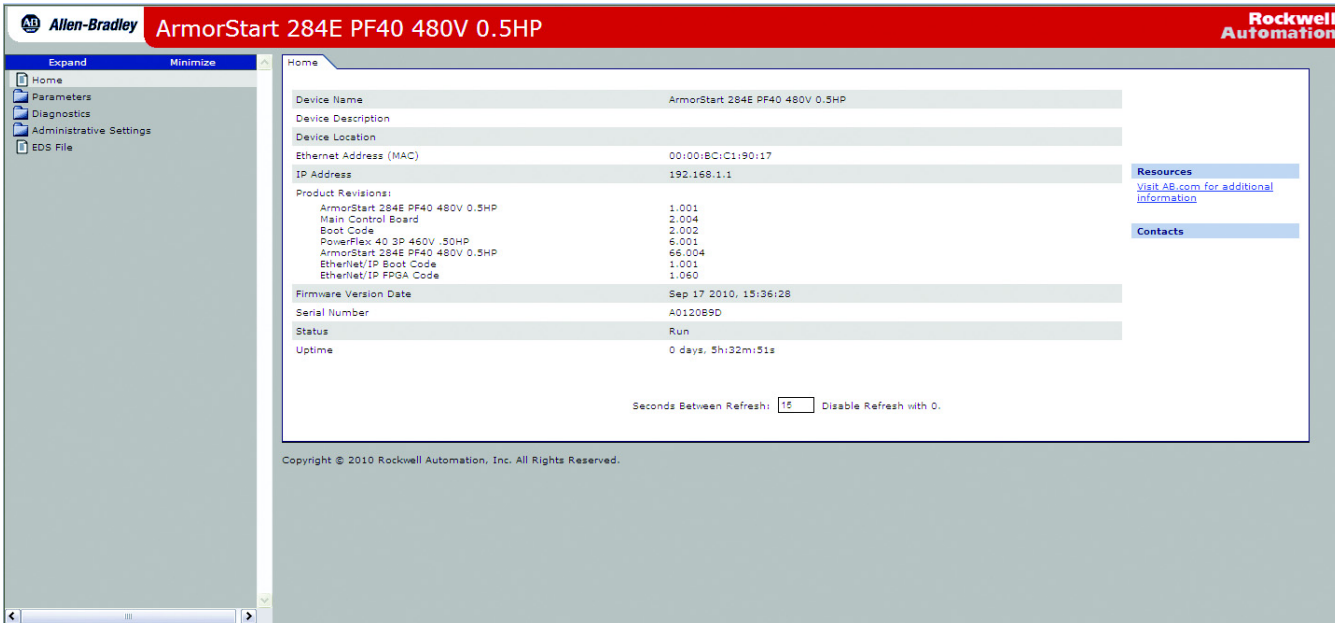

From here you are able to view parameter settings, device status, and diagnostics from multiple tab views.

Figure 66 - Multiple Tab Views



Network Configuration

To access the network configuration, log in to the Administrative Setting. The factory default login is Administrator. The factory default password is not used. The user should change the password to ensure unauthorized personnel do not access and modify the device configuration.

Figure 67 - Network Configurations

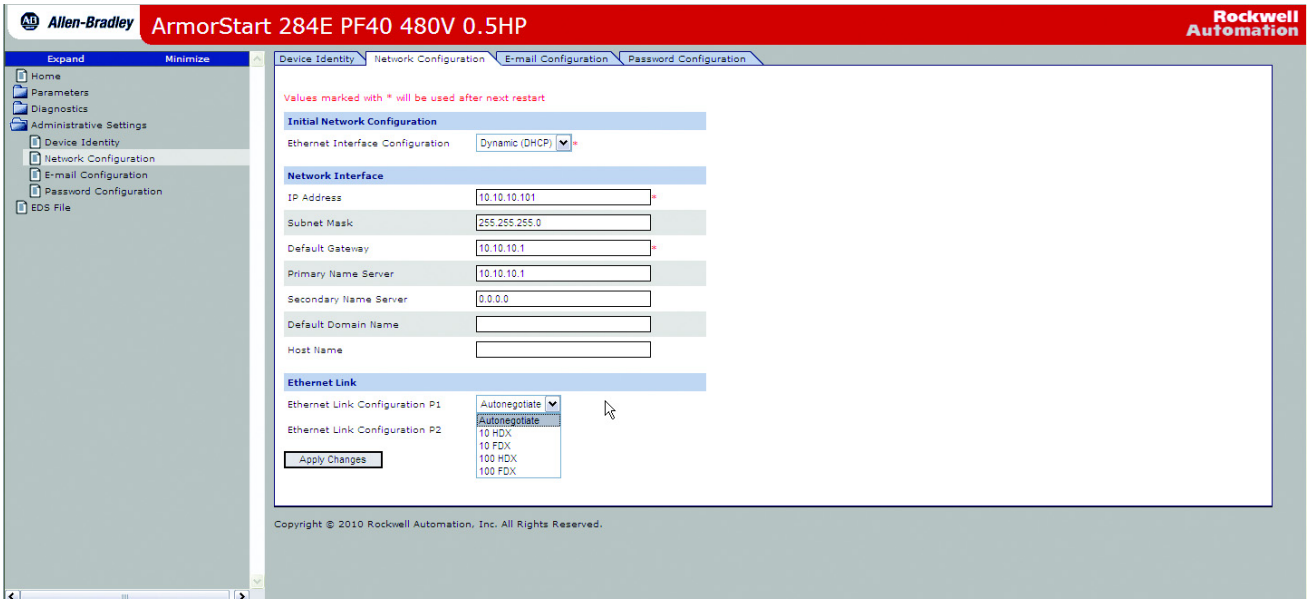

From this screen you can change the Ethernet Configuration. For example, in the above image the default IP address was changed from 192.168.1.1 to 10.10.10.101. To access the webpage after a power cycle, the new address must be used.

It is also important to leave the Ethernet link configuration P1/P2 set to auto negotiate to minimize network issues. But if this is not acceptable you must verify that all devices on the network are set to the same setting or network issues may result.

Parameter Configuration

ArmorStart Ethernet/IP embedded web server provides the user the ability to view and modify the device configuration without having to access RSLogix 5000. To view the device configuration from the web server, select the Parameters folder. For the parameter configuration, the user logs in through the Administrative Settings, or when prompted.

Figure 68 - Starter Setup

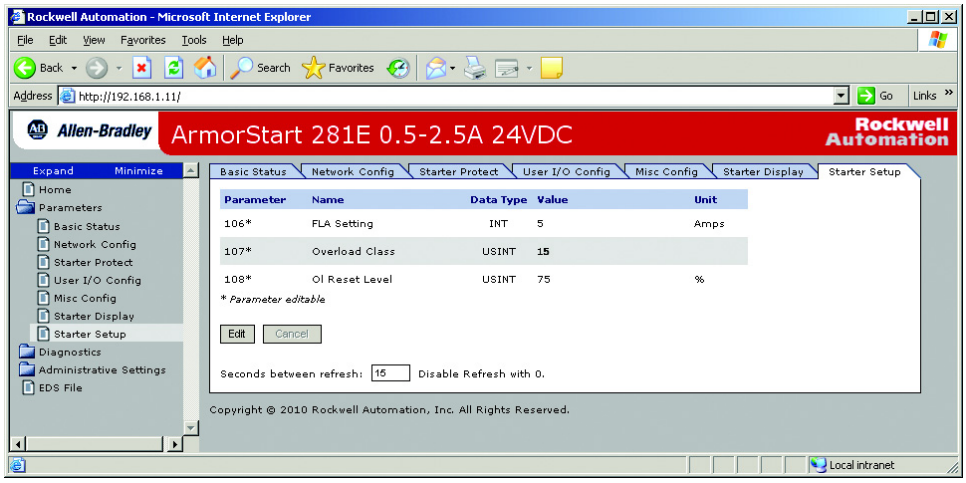

In the figure above the Starter Setup parameters are viewed. The user can view all parameters from this screen. To modify a parameter, the user clicks the “Edit” button.

Figure 69 - Enter Network Password



The user is prompted to enter the default user name (Administrator). There is no password set by default. The user is expected to change the user name (login) and password to avoid unauthorized access to the device configuration.

Figure 70 - Overload Class Settings

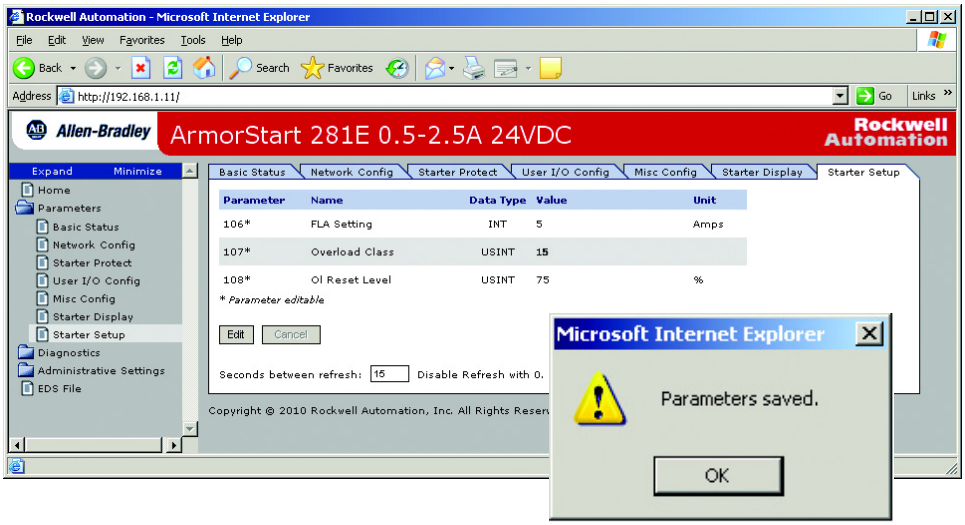

The above screen shows an example of changing the Overload Class setting to 15. Once all changes are made select Apply.

E-mail Notification Configuration

ArmorStart Ethernet/IP internal web server supports the e-mailing of warning and trip messages via Simple Mail Transfer Protocol (SMTP). The configuration parameters for the SMTP Server's IP address, user login, and port number are configurable through the Administrative Settings page of the internal web server. The user configures the device name, device description, and device trip type.

Figure 71 - E-mail Notification Configuration



E-mail triggers when a:

- Trip occurs
- Trip is cleared
- Warning occurs
- Warning is cleared

Note: "Cleared Event" e-mails are only sent when all events have been cleared and if a trip event e-mail has previously been sent. For example, if the device is configured to send e-mails when a phase loss trip and an overload trip is detected, no e-mail is sent when both the overload and the phase loss is cleared.

The following is an example trip e-mail:

Subject:	ArmorStart 281E, 0.5…2.5 A, 24V DC has detected a trip.
Body:	
Trip Type:	Overload
Trip Info:	Load has drawn excessive current that is based on the trip class selected.
Device Name:	ArmorStart 281E, 0.5…2.5 A, 24V DC (From Identity Object)
Device Description:	Lift conveyor On-Machine motor starter (From E-mail Config web page)
Device Location:	Customer Plant (From E-mail Config web page)
Contact Info:	Joe Schmo (From E-mail Config web page) joe.schmo@microsoft.com

Device Connections

The device supports both scheduled (Class 1) and unscheduled (Class 3 & UCMM) CIP connections. A maximum of two Class 1 CIP connections (one exclusive owner and one listen only) are supported, one per PLC. Six Class 3 CIP connections are supported.

Ownership

In a Studio 5000® system, modules multicast data. Therefore, multiple modules can receive the same data simultaneously from a single module. When choosing a communication format, decide whether to establish an owner-controller or listen-only relationship with the module.

Table 6 - Communication Relationship

Ownership Type	Description
Owner controller	The controller that creates the primary configuration and communication connection to a module. The owner controller writes configuration data and can establish a connection to the module. An owner connection is any connection that does not include Listen-Only in its Comm Format. 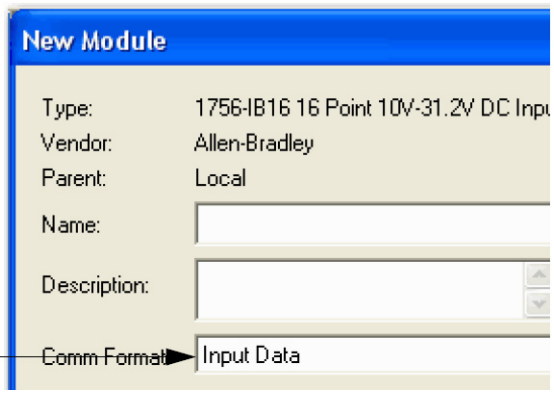
Listen-only connection	An I/O connection where another controller owns/provides the configuration data for the I/O module. A controller using a listen-only connection monitors only the module. It does not write configuration data and can only maintain a connection to the I/O module when the owner controller is actively controlling the I/O module. Listen-only connection 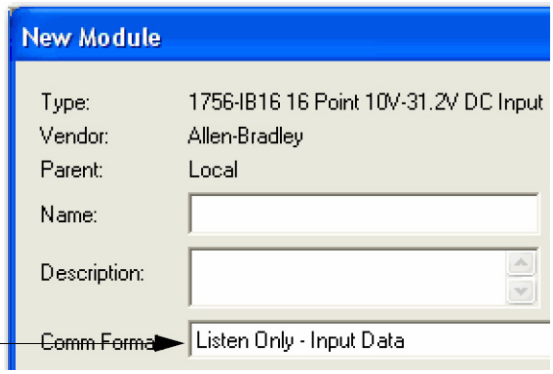

Ethernet Statistics Web Page

The Ethernet Statistics web page of a scanner provides a summary of the status of communication activity on the Ethernet network.

The most commonly monitored fields are circled in the graphic and described in the table that follows.

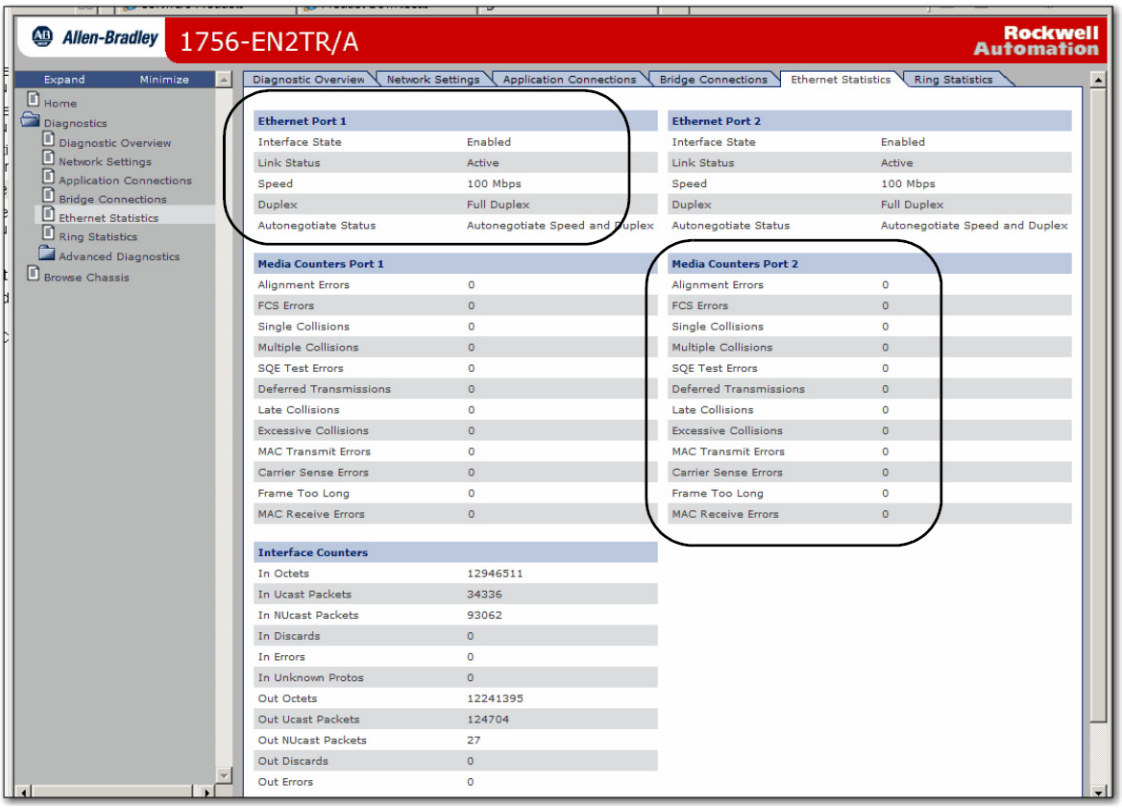

This table describes the field that is most commonly used on the Ethernet Statistics web page.

Table 7 - Ethernet Statistics Web Page

Field	Specifies
Ethernet Port 1 (These definitions apply to the same fields in the Ethernet Port 2 section.)	
Interface State	Whether the port is turned off or on. Active or inactive indicates whether there is a cable that is connected.
Link Status	Whether the port is blocked for DLR protocol frames.
Speed	Whether the Ethernet port is operating at 10 or 100 MBps.
Duplex	Whether the Ethernet port is operating at half duplex or full duplex.
Autonegotiate Status	Whether the port speed and Duplex mode were determined via autonegotiation or whether they were manually configured.
Media Counters Port 1	
Alignment Errors	A frame containing bits that do not total an integral multiple of eight.
FCS Errors	A frame containing eight bits, at least one of which has been corrupted.
Single Collisions	The number of outgoing packets that encountered only one collision during transmission.

Field	Specifies
Multiple Collisions	The number of outgoing packets that encountered 2...15 collisions during transmission.
SQE Test Errors	A test to detect the collision-present circuit between a transceiver and a network interface card (NIC). **IMPORTANT**: Because most NICs now have an integrated transceiver, the SQE test is unnecessary. Ignore this media counter.
Deferred Transmissions	The number of outgoing packets whose transmission is deferred because the network is busy when the first attempt is made to send them.
Late Collisions	The number of times two devices transmit data simultaneously.
Excessive Collisions	The number of frames that experience 16 consecutive collisions.
MAC Transmit Errors	Frames for which transmission fails due to an internal MAC sublayer transmit error.
Carrier Sense Errors	Times that the carrier sense condition was lost or never asserted when attempting to transmit a frame.
Frame Too Long	The number of incoming packets that exceed the maximum Ethernet packet size.
MAC Receive Errors	Frames for which reception on the Ethernet interface failed due to an internal MAC sublayer receive error.

Connection Manager Cmd Object Info Web Page

The Connection Manager Cmd Object Info web page of a scanner provides a summary of connection request activity on the Ethernet network.

The most commonly used field on this page is Connections Closed due to a Timeout. This field shows the number of CIP connection timeouts that have occurred on the module.

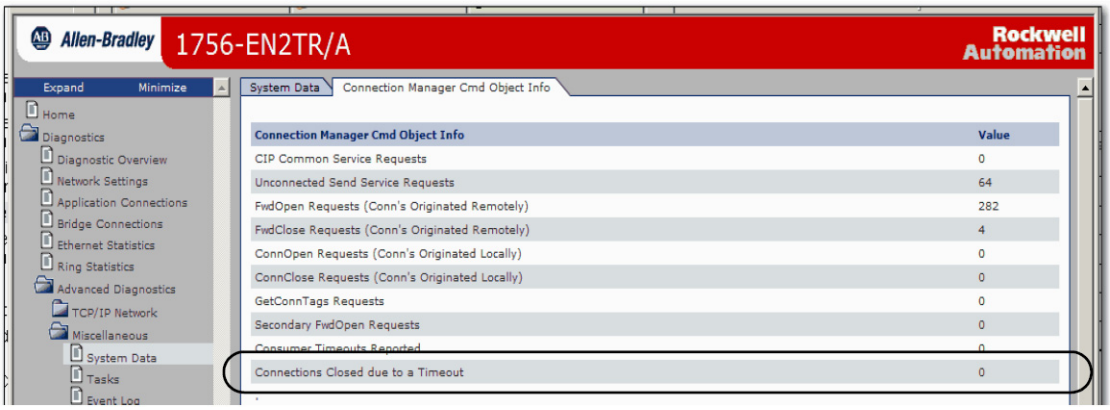

Ring Statistics Web Page

IMPORTANT The Ring Statistics web page, and the descriptions in this section, only apply to modules you can use in a Device-level Ring (DLR) network:

- 1756-EN2TR communication module
- 1756-EN3TR communication module

The Ring Statistics web page of a scanner provides a summary of the module's operating state in a DLR application.

The most commonly monitored fields are circled in the graphic and described in the table that follows.

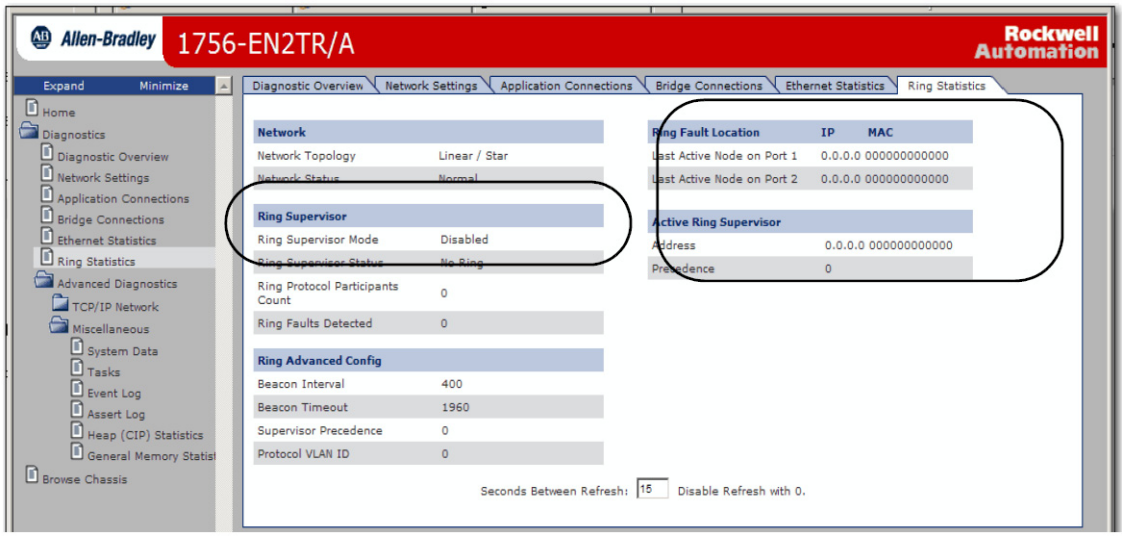

This table describes the field that is most commonly used on the Ring Statistics web page.

Table 8 - Ring Statistics Web Page

Field	Specifies
Ring Supervisor	
Ring Supervisor Mode	Whether a module is configured to function as supervisor node or a ring node.
Ring Supervisor Status	Whether a module that is configured to function as a supervisor node is functioning as the active ring supervisor or a backup supervisor node.
Ring Fault Location	
Last Active Node on Port 1	The IP or MAC ID address of the last active node between port 1 on the module and the faulted part of the network.
Last Active Node on Port 2	The IP or MAC ID address of the last active node between port 2 on the module and the faulted part of the network.
Active Ring Supervisor	
Address	The IP or MAC ID address of the active ring supervisor.
Precedence	The precedence value of the module. If the active supervisor node's operation is interrupted the backup supervisor with the next highest precedence value becomes the active supervisor node.

Adding an ArmorStart Selection to RSLogix 5000 Software

Setup

This section shows you how to add an ArmorStart AOP to RSLogix™ 5000 software. It is assumed that you have downloaded and installed the AOP so that the RSLogix 5000 software can fully support the ArmorStart EtherNet/IP. The AOP can be downloaded from: http://support.rockwellautomation.com/controlflash/LogixProfiler.asp.

1. Open RSLogix 5000 software by double-clicking the icon on your desktop.



2. Select File > New, to create a new project.

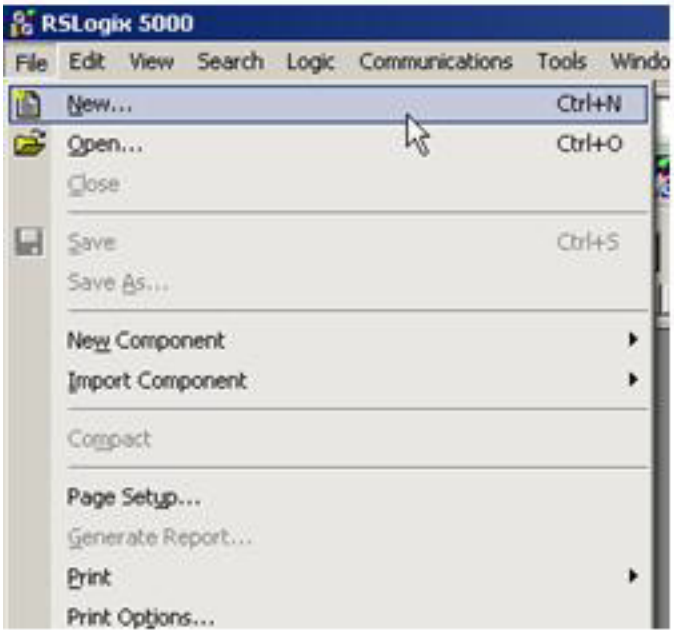

3. Enter the name of the project and select your controller from the Type pull-down menu. (For this example, a Cat. No. 1769-L35E and software version 19 is used.) Click OK.

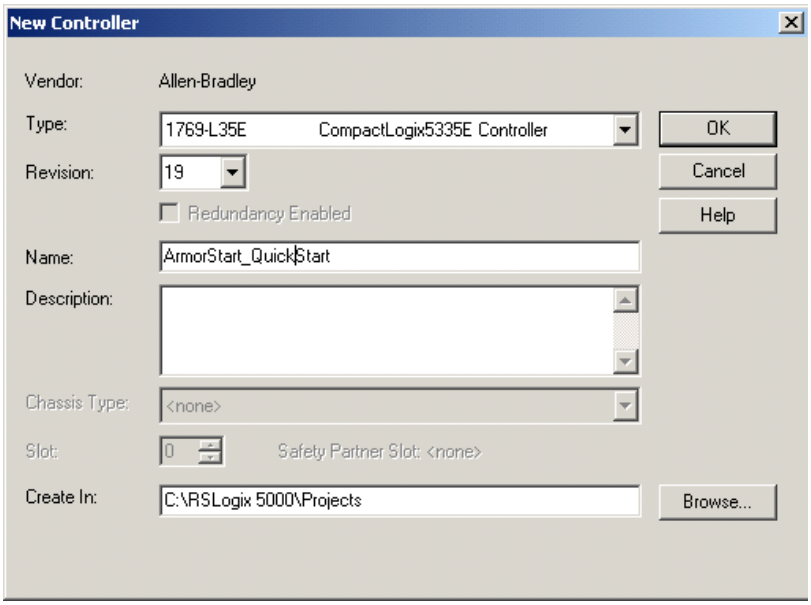

4. To add a new module to the tree, right-click Ethernet and select New Module. This allows you to add a new ArmorStart selection to the Logix Project.

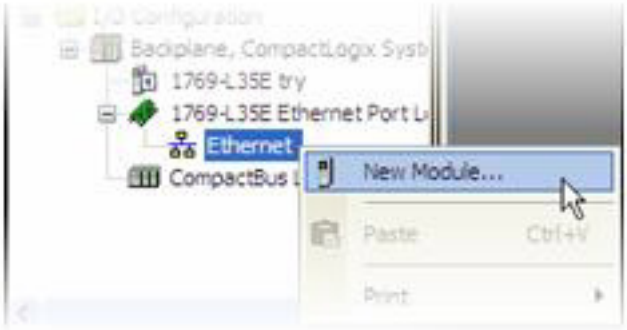

5. Select the ArmorStart in your application and click OK.

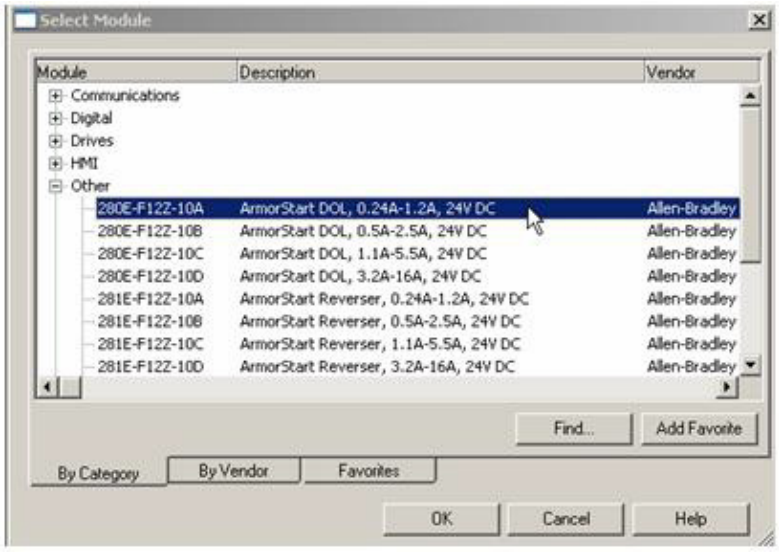

6. The AOP is shown below. Enter a Name for this ArmorStart selection and an Ethernet address. For this example, the Private Network setting is used. This should be set to match the IP address switch setting on the ArmorStart selection. Click OK.

Note: See Configuring EtherNet/IP Address in Chapter 4 to set an IP address on the device.

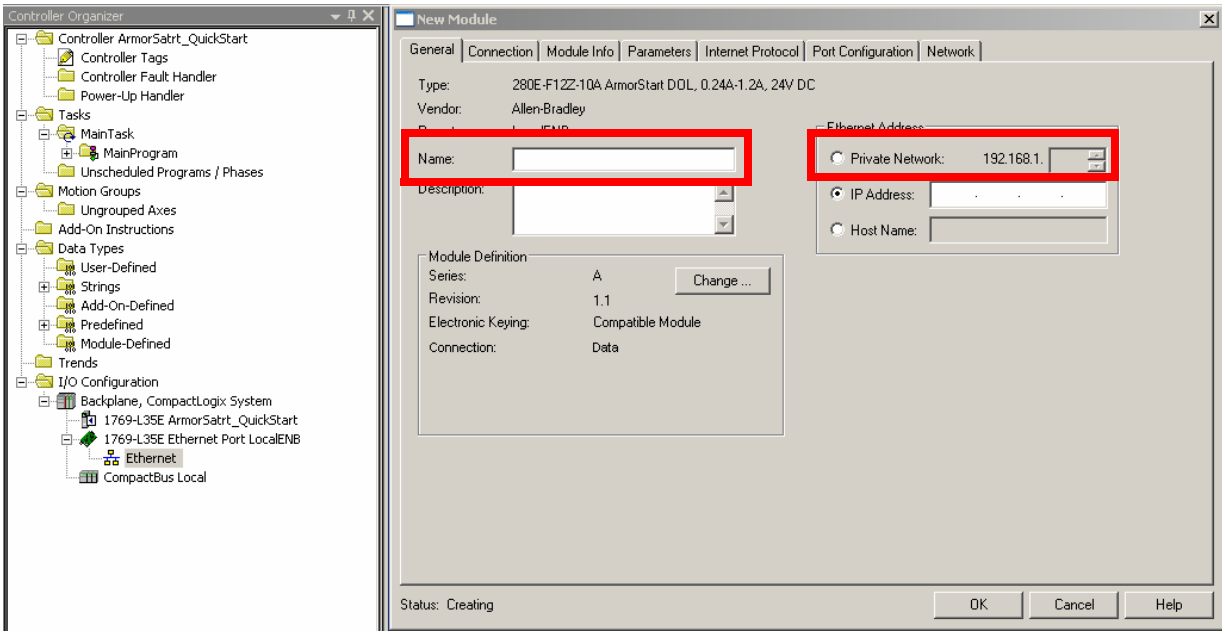

Connect and Configure ArmorStart with Add-On-Profile (AOP)

This section shows the AOP tabs and how they can be used to connect, obtain status, and configure the ArmorStart selection. Before the walkthrough is started, the RSLogix 5000 software should be open and an AOP displayed as shown below.

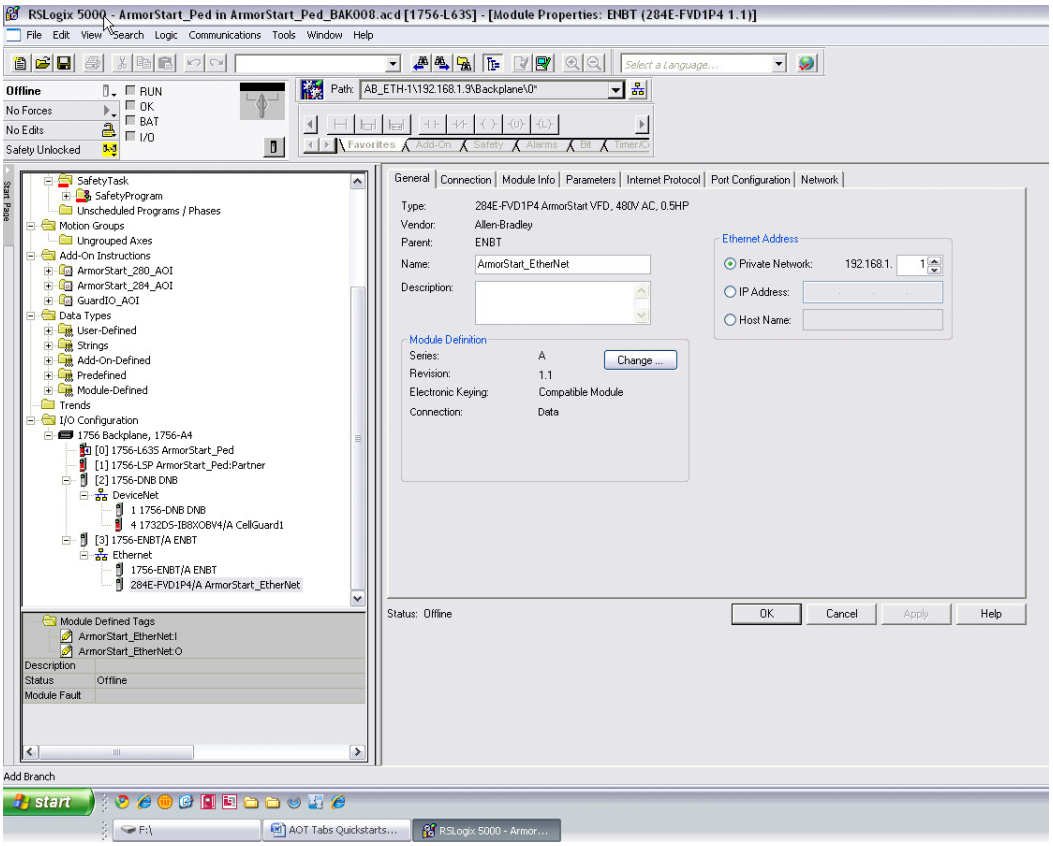

The screenshot above displays that the AOP has seven tabs that can be used to configure and/or monitor your ArmorStart selection. The following lists the tabs and whether they are editable or not, with the controller when OFFLINE, ONLINE, or both:

- **General** – OFFLINE
- **Connection** – OFFLINE
- **Module Info** – ONLINE
- **Parameters** – OFFLINE/ONLINE

Internet Protocol – ONLINE

- **Port Configuration** – ONLINE
- **Network** – ONLINE

The last five tabs in the list do not display information until the ONLINE connection has been established with the ArmorStart device. The General, Connection, and Parameters tabs are discussed first, because they are used to define OFFLINE settings so that connection with the ArmorStart device can be established.

Offline Connection

General Tab

Click the General tab to display the following:

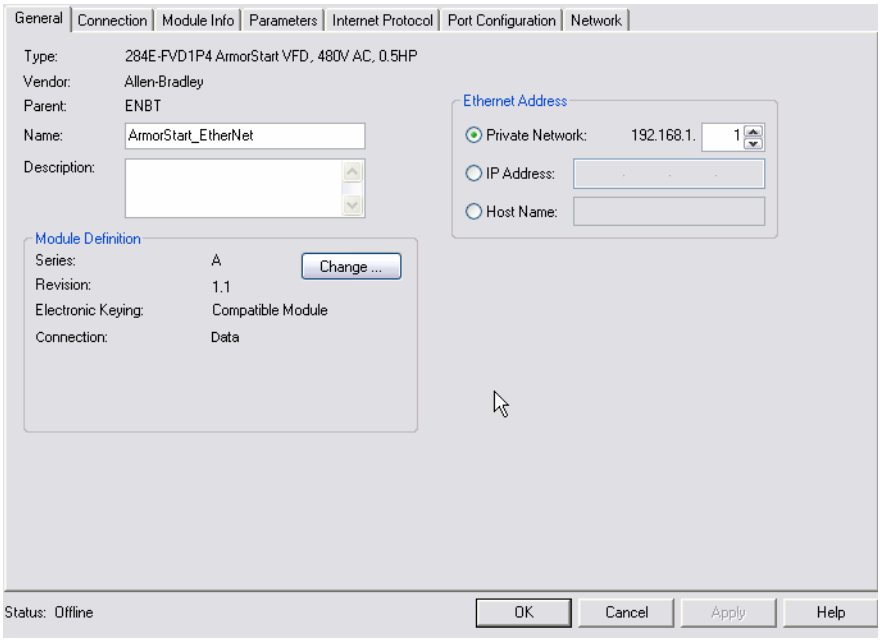

This tab allows you to name your module, which should be descriptive and representative of the module. The IP Address of the module must also be input so that communication can be established. The IP Address should be the one defined using the BootP/DHCP Server, the Rotary Network Address Switches or the ArmorStart internal web server.

For most cases, the Host Name and Module Definition section of this tab do not require any adjustment. Changes to either of these should only be made if you are familiar with the functionality of each of these sections.

Connection Tab

Click the Connection tab to display the following:

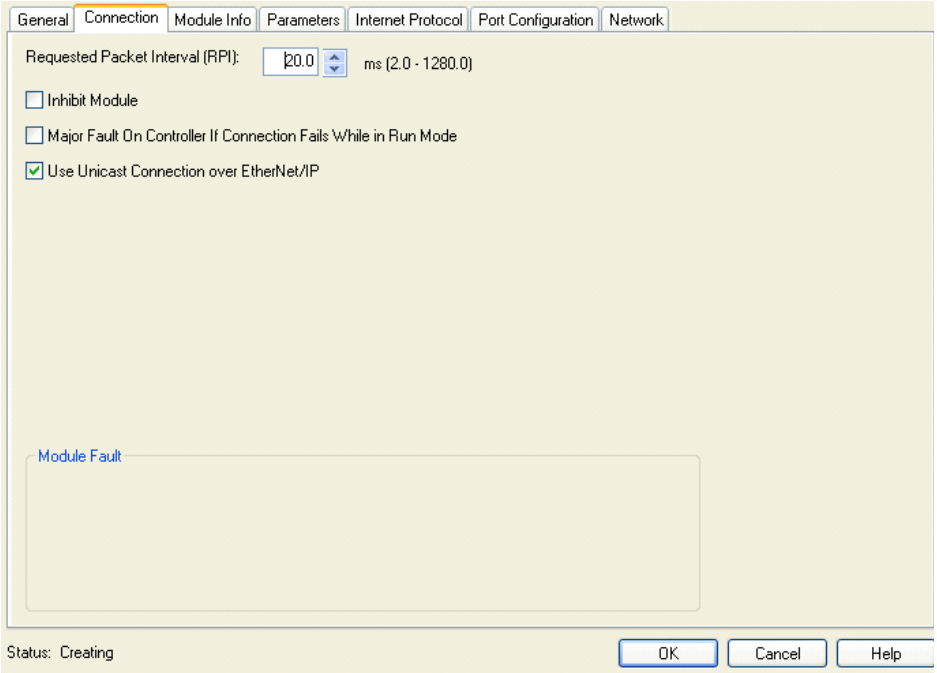

The Request Packet Interval (RPI) indicates the maximum frequency at which data is received. It is possible that data could come more quickly than the time interval assigned in the RPI. In most cases, the default 20 ms should be the optimal setting. If you check the Inhibit Module option, connection to controller tags will be broken. The Major Fault on Controller if Connection Fails While in Run Mode option should be checked to ensure that the controller processes the connection fault with the ArmorStart. The Use Unicast Connection over EtherNet/IP is checked to use the Unicast mode instead of the EtherNet/IP mode. This appears only for modules using RSLogix 5000 software version 18 or later that supports Unicast.

Parameters Tab

Click the Parameters tab to display the following:

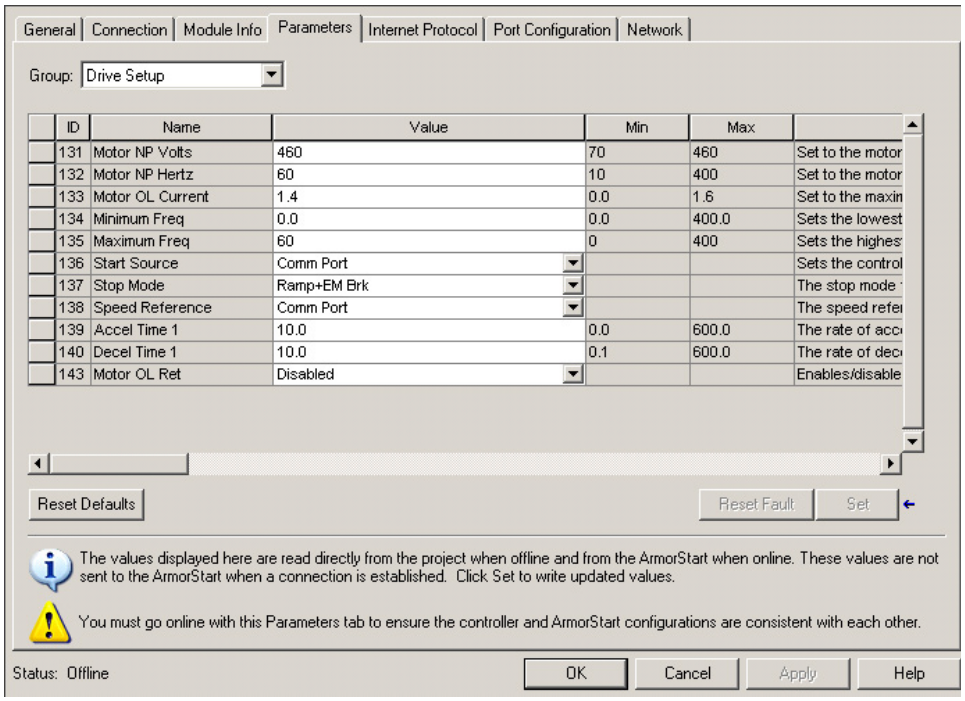

The parameters are divided into groups that are based on the type of ArmorStart device. By clicking in the Group pull-down menu, you can choose which parameter group is displayed. When the Parameters tab is selected, the tab defaults to the Drive Setup (Bulletin 284E) or Starter Setup (Bulletin 280E) groups depending on the ArmorStart selection. These Setup groups are the minimum required parameters to get the ArmorStart device running.

After this parameter group has been set, the next time that the Parameters tab is opened, all parameters are shown and the tab is no longer default to the setup groups.

Online Connection

Now that the offline connection settings have been set, connect to the ArmorStart device to review the last five AOP tabs.

Note: If you are using a Cat. No. 1756-ENBT Ethernet module to communicate with the PLC, verify that you have updated the module's firmware to Revision 6.001 or later. The latest firmware can be found at http://support.rockwellautomation.com/controlflash/.

1. If a controller path is not set in the field that is shown below, you must first set a path before going online with the controller. Click the RSwho button shown below.



2. Expand and browse the AB_ETHIP-1, Ethernet driver.

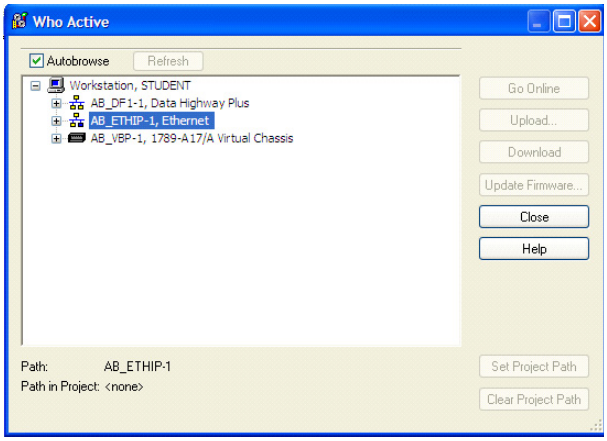

3. Select the Controller path. Then click Go Online.

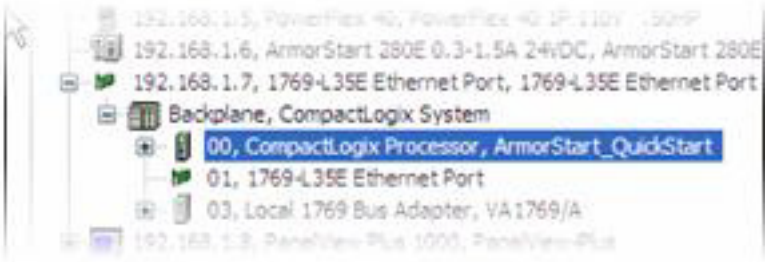

4. The following appears and for this example, click Download to connect to the controller.

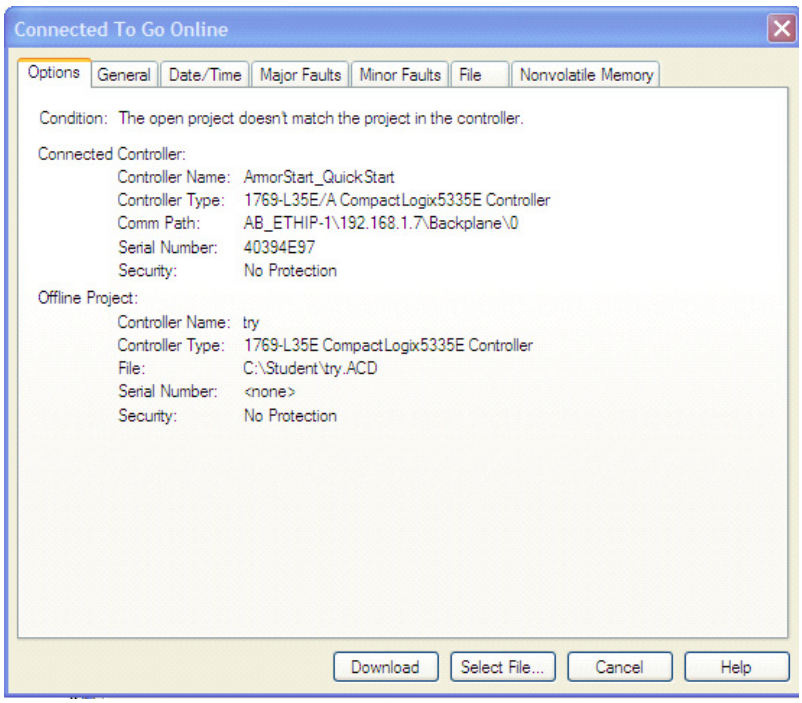

5. If a download confirmation dialog box appears, click Download again.
6. Click Yes to bring the controller back to Remote Run.

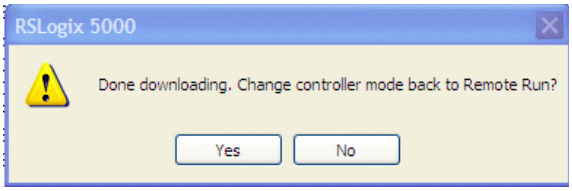

7. The controller should now be online. If at any point you go offline and a path is selected, you can also go online by clicking the Offline drop down in the upper left corner of the screen. Click Go Online to connect to the ArmorStart device, as shown below.

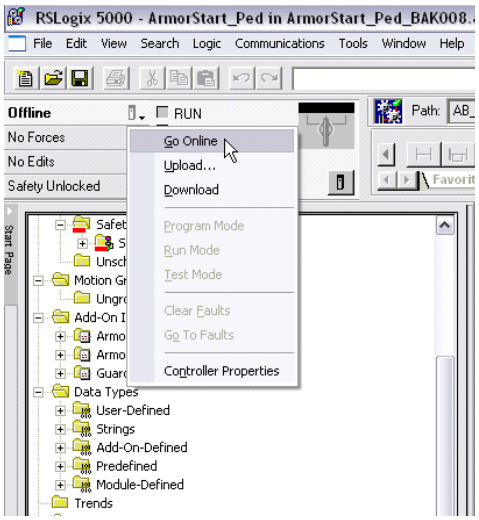

Note: If a yellow triangle appears next to the ArmorStart Icon in the Controller Organizer Tree as shown below, it means that the connection is faulted. The problem must be fixed before you can connect to the ArmorStart device. The next steps assume that the connection was successful.

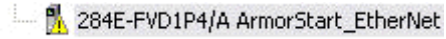

Parameters Tab

Return to the Parameters tab again once the AOP is opened by selecting the ArmorStart in the project tree. Notice that when clicking in the Parameters tab, an ArmorStart Correlation pop-up window is displayed, as shown below.

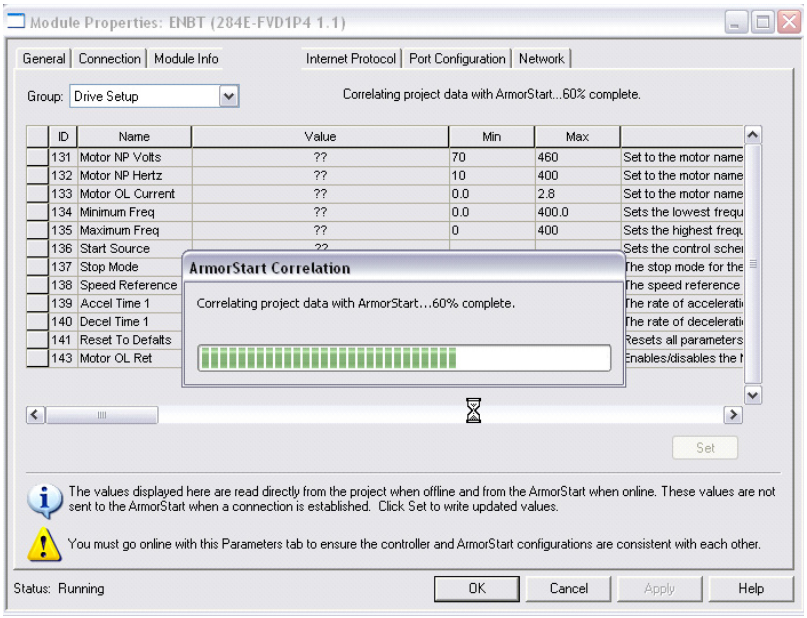

This indicates that the AOP is comparing the parameter data entered offline vs. the parameter data that is stored in the ArmorStart device. If any discrepancies are found between the parameters in the AOP and the parameters in the ArmorStart device, a window will pop-up, as shown below, asking you to decide which parameters you want to keep.

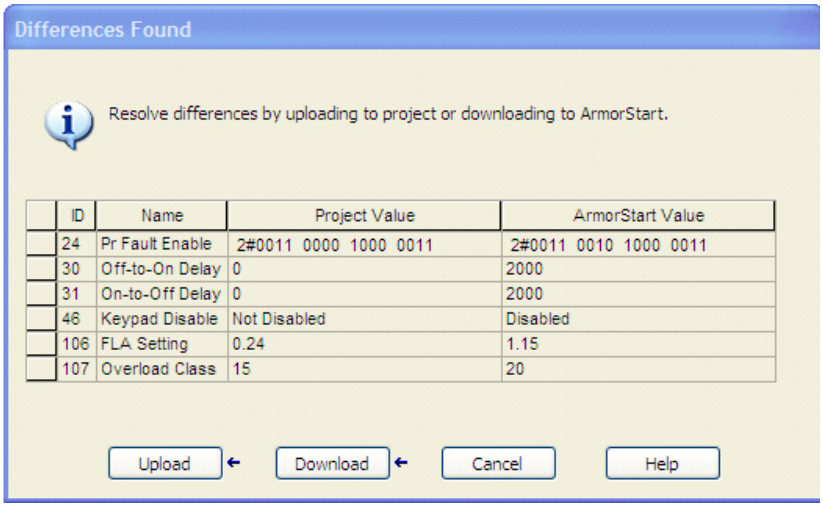

If you want to keep the parameters in the AOP, select Download. If you want to keep the parameters in the ArmorStart device, select Upload. Otherwise, select Cancel. Clicking Cancel locks the user out of viewing the values. If you are connected to a new ArmorStart device and you just created the ArmorStart object and have not made any changes in the parameters, the ArmorStart correlation should not find any discrepancy.

Note: If you make any changes to the parameters offline, they will not be downloaded to the ArmorStart device when the connection is made (going Online). For the Offline changes to take effect you must go to the Parameters tab. Once you click the Parameters tab, ArmorStart correlation takes place and then the changes can be downloaded to the ArmorStart device.

Module Info Tab

Click the Module Info tab to display the following:

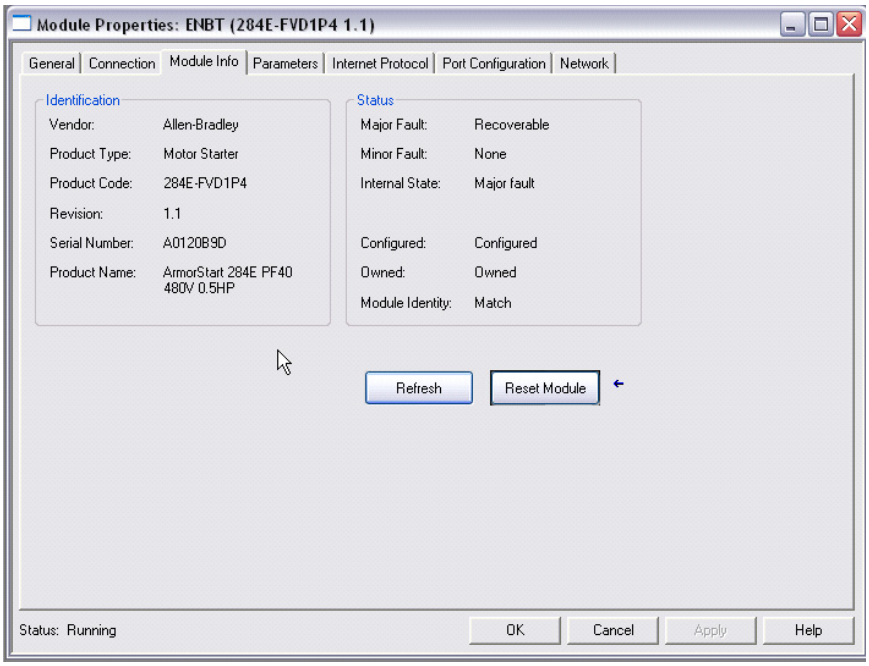

This tab displays general identification information, as well as status information about the ArmorStart device. It is important to note that the information that is displayed in this tab is not constantly updated. After you click the Module Info tab, the AOP queries the ArmorStart device once for the information displayed in this tab and does not query the ArmorStart for the values again. If after the initial query the status of the ArmorStart device changes, for example a fault occurs, the change in the status will not be automatically updated. The **Refresh** button must be pressed to request the AOP for another ArmorStart query.

Note: A connection status (offline, online, downloading, or uploading) is provided at the bottom left of the tab window. The connection status appears in all tabs.

Internet Protocol Tab

Click the Internet Protocol tab to display the following:

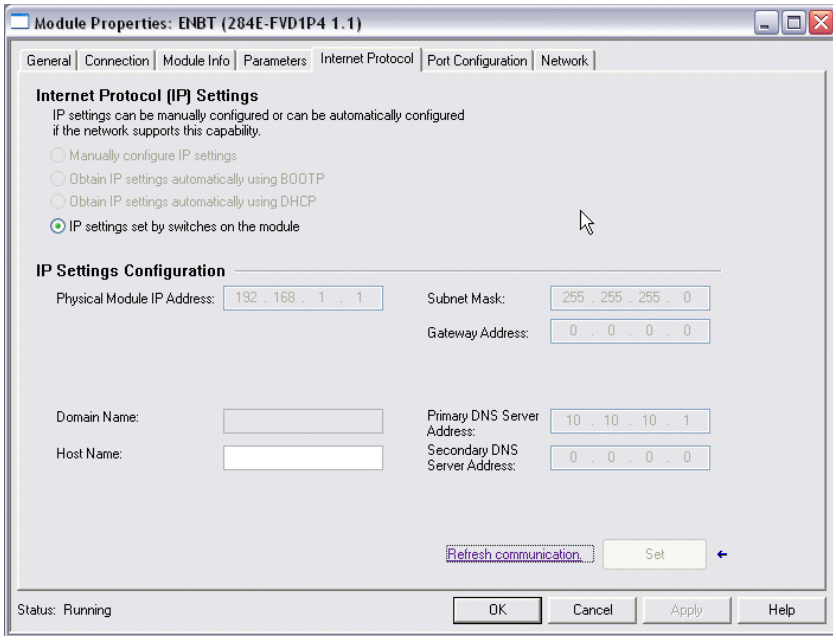

If the IP address was set up using the Rotary Network Address Switches, default settings for the IP would already be established and you will not be able to make any changes in this tab. In most cases, you would not need to make any changes in this tab and it only displays the current IP Settings Configuration.

Port Configuration Tab

Click the Port Configuration tab to display the following:

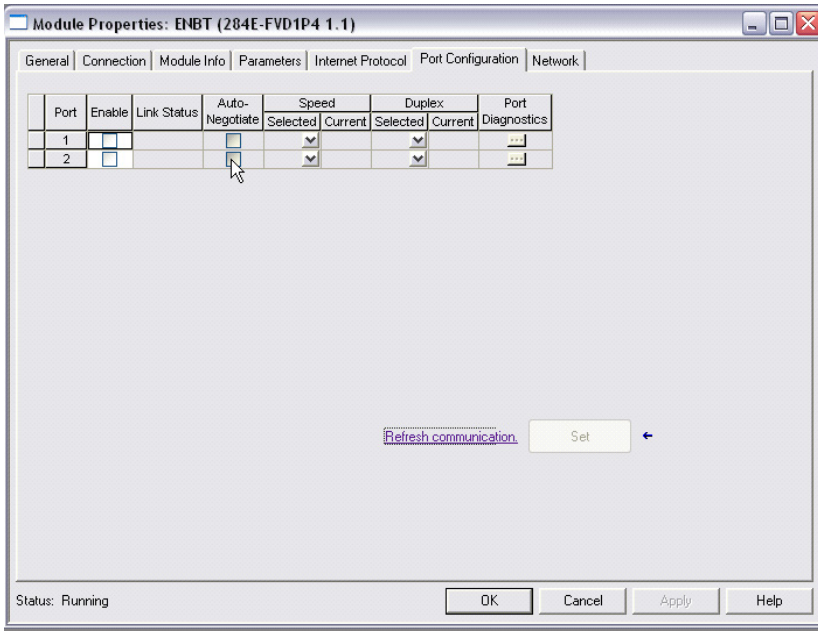

This tab is used to enable or disable a physical port in the module. The ports are normally in Auto Negotiate mode, which in general, is the recommended setting. Otherwise, you have to physically set the Speed or Duplex selection in this tab. It is important to note that although there are two physical ports, they act as one. Therefore, when you press either of the Port Diagnostic buttons, information coming from both of the physical ports is displayed.

Network Tab

Click this tab to display the following:

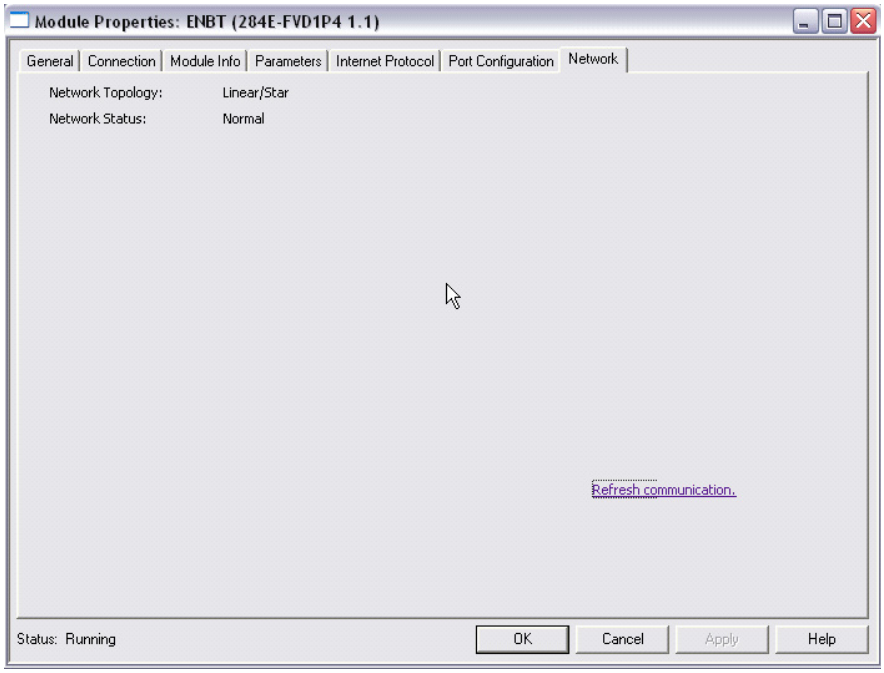

This tab displays information about the network configuration, such as the type of topology (linear or device level ring).

Auto-Generated Tags

After you install and configure the AOP, the controller tags are generated. The tags names are descriptive and automatically generated. This greatly simplifies programming. The figure below shows an example of the auto-generated tags for an ArmorStart selection.

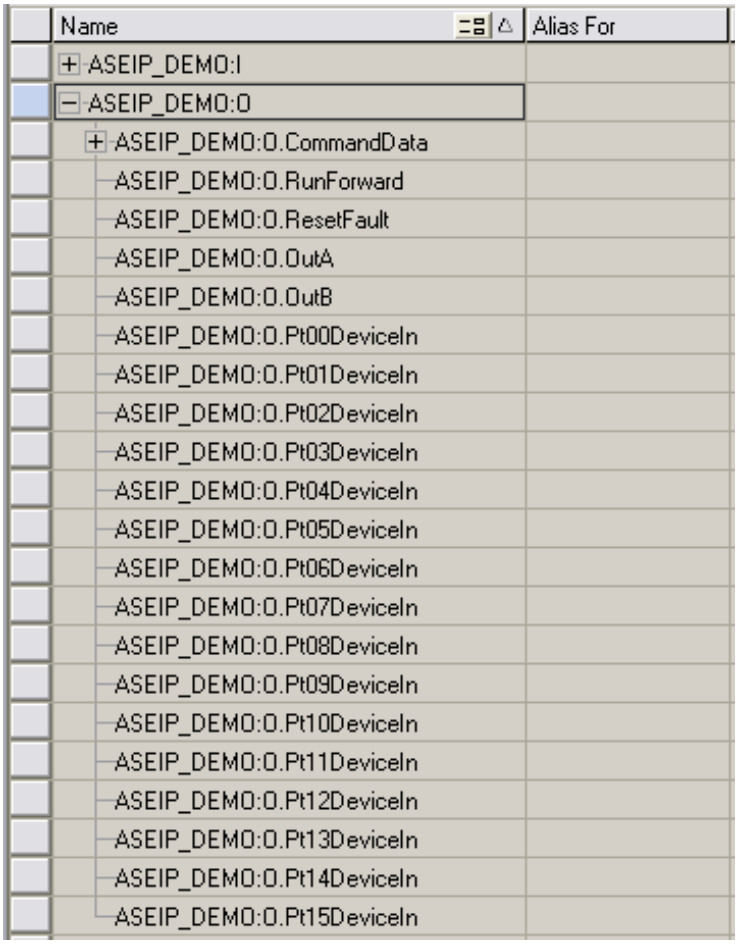

The following tables provide more clarification regarding the Produce and Consume assemblies and how they correlate with the auto-generated names.

Using an AOP the data in the Consumed and Produced Assemblies are automatically created as descriptive tag names. To drive this point home we've highlighted a few of the commands to demonstrate the AOP tag alignment to the Consumed and Produced Assemblies in the following tables.

Table 9 - Default Consume Assembly for Bulletin 284E

Instance 166 Consumed Inverter Type Starter with Network Inputs								
Byte	**Bit 7**	**Bit 6**	**Bit 5**	**Bit 4**	**Bit 3**	**Bit 2**	**Bit 1**	**Bit 0**
0	Out B	Out A	—	JogReverse	JogForward	ResetFault	RunReverse	RunForward
1	DriveInput4	DriveInput3	DriveInput2	DriveInput1	DecelCtrl_1	DecelCtrl_0	AccelCtrl_1	AccelCtrl_0
2	FreqCommand (Low) (xxx.x Hz)							
3	FreqCommand (High) (xxx.x Hz)							
4	Pt07DeviceIn	Pt06DeviceIn	Pt05DeviceIn	Pt04DeviceIn	Pt03DeviceIn	Pt02DeviceIn	Pt01DeviceIn	Pt00DeviceIn
5	Pt15DeviceIn	Pt14DeviceIn	Pt13DeviceIn	Pt12DeviceIn	Pt11DeviceIn	Pt10DeviceIn	Pt9DeviceIn	Pt8DeviceIn

Table 10 - Bulletin 284E Consume Assembly Command Tags

Controller Output/ Command Tags		
Controller Name	**Name**	**Logix Tag Name**
AS_DEMO	RunForward	AS_DEMO:O.RunForward
AS_DEMO	RunReverse	AS_DEMO:O.RunReverse
AS_DEMO	ResetFault	AS_DEMO:O.ResetFault
AS_DEMO	JogForward	AS_DEMO:O.JogForward
AS_DEMO	JogReverse	AS_DEMO:O.JogReverse
AS_DEMO	OutA	AS_DEMO:O.OutA
AS_DEMO	OutB	AS_DEMO:O.OutB
AS_DEMO	AccelCtrl_0	AS_DEMO:O.AccelCtrl_0
AS_DEMO	AccelCtrl_1	AS_DEMO:O.AccelCtrl_1
AS_DEMO	DecelCtrl_0	AS_DEMO:O.DecelCtrl_0
AS_DEMO	DecelCtrl_1	AS_DEMO:O.DecelCtrl_1
AS_DEMO	DriveInput1	AS_DEMO:O.DriveInput1
AS_DEMO	DriveInput2	AS_DEMO:O.DriveInput2
AS_DEMO	DriveInput3	AS_DEMO:O.DriveInput3
AS_DEMO	DriveInput4	AS_DEMO:O.DriveInput4
AS_DEMO	FreqCommand	AS_DEMO:O.FreqCommand
AS_DEMO	Pt00DeviceIn	AS_DEMO:O.Pt00DeviceIn
AS_DEMO	Pt01DeviceIn	AS_DEMO:O.Pt01DeviceIn
AS_DEMO	Pt02DeviceIn	AS_DEMO:O.Pt02DeviceIn
AS_DEMO	Pt03DeviceIn	AS_DEMO:O.Pt03DeviceIn
AS_DEMO	Pt04DeviceIn	AS_DEMO:O.Pt04DeviceIn
AS_DEMO	Pt05DeviceIn	AS_DEMO:O.Pt05DeviceIn
AS_DEMO	Pt06DeviceIn	AS_DEMO:O.Pt06DeviceIn
AS_DEMO	Pt07DeviceIn	AS_DEMO:O.Pt07DeviceIn
AS_DEMO	Pt08DeviceIn	AS_DEMO:O.Pt08DeviceIn
AS_DEMO	Pt09DeviceIn	AS_DEMO:O.Pt09DeviceIn
AS_DEMO	Pt10DeviceIn	AS_DEMO:O.Pt10DeviceIn

Controller Output/ Command Tags		
Controller Name	**Name**	**Logix Tag Name**
AS_DEMO	Pt11DeviceIn	AS_DEMO:O.Pt11DeviceIn
AS_DEMO	Pt12DeviceIn	AS_DEMO:O.Pt12DeviceIn
AS_DEMO	Pt13DeviceIn	AS_DEMO:O.Pt13DeviceIn
AS_DEMO	Pt14DeviceIn	AS_DEMO:O.Pt14DeviceIn

Table 11 - Default Produce Assembly for Bulletin 284E

Produce Assembly - Instance 151 "Drive Status" - Bulletin284E Starters								
Byte	**Bit 7**	**Bit 6**	**Bit 5**	**Bit 4**	**Bit 3**	**Bit 2**	**Bit 1**	**Bit 0**
0	Reserved - {name}:I.Fault ❶							
1	Reserved - {name}:I.Fault ❶							
2	Reserved - {name}:I.Fault ❶							
3	Reserved - {name}:I.Fault ❶							
4	AtReference	Network ReferenceStatus	NetControlStatus	Ready	RunningReverse	RunningForward	WarningPresent	TripPresent
5	Output ContactorStatus	Brake ContactorStatus	DisconnectClosed	Hand	In3	In2	In1	In0
6	OutputFrequency (Low) (xxx.x Hz)							
7	OutputFrequency (High) (xxx.x Hz)							
8	Pt07DeviceOut	Pt06DeviceOut	Pt05DeviceOut	Pt04DeviceOut	Pt03DeviceOut	Pt02DeviceOut	Pt01DeviceOut	Pt00DeviceOut
9	LogicEnable	Pt14DeviceOut	Pt13DeviceOut	Pt12DeviceOut	Pt11DeviceOut	P10DeviceOut	Pt09DeviceOut	Pt08DeviceOut
10	Value of the parameter pointed to by "Parameter 13 Prod Assy Word 0" (low byte)" - Int00DeviceOut							
11	Value of the parameter pointed to by "Parameter 13 Prod Assy Word 0" (high byte)" - Int00DeviceOut							
12	Value of the parameter pointed to by "Parameter 14 Prod Assy Word 1" (low byte)" - Int01DeviceOut							
13	Value of the parameter pointed to by "Parameter 14 Prod Assy Word 1" (high byte)" - Int01DeviceOut							
14	Value of the parameter pointed to by "Parameter 15 Prod Assy Word 2" (low byte)" - Int02DeviceOut							
15	Value of the parameter pointed to by "Parameter 15 Prod Assy Word 2" (high byte)" - Int02DeviceOut							
16	Value of the parameter pointed to by "Parameter 16 Prod Assy Word 3" (low byte)" - Int03DeviceOut							
17	Value of the parameter pointed to by "Parameter 16 Prod Assy Word 3" (high byte)" - Int03DeviceOut							

❶ Identifies if a Communication Fault exists. If a communication loss is present the PLC writes four bytes of 1's to this tag. The user should monitor this tag to ensure the data is valid.

IMPORTANT The user PLC control program should monitor the **I.Fault** tag to ensure the data is accurate. When a communications fault occurs, the data in the consume and produce tags may not accurately reflect the status.

Table 12 - Bulletin 284E Produced Assembly Status Tags

Controller Input/ Status Tags		
Controller Name	**Name**	**Logix Tag Name**
AS_DEMO	Fault	AS_DEMO:I.Fault
AS_DEMO	TripPresent	AS_DEMO:I.TripPresent
AS_DEMO	WarningPresent	AS_DEMO:I.WarningPresent
AS_DEMO	RunningForward	AS_DEMO:I.RunningForward
AS_DEMO	RunningReverse	AS_DEMO:I.RunningReverse
AS_DEMO	Ready	AS_DEMO:I.Ready
AS_DEMO	NetworkControlStatus	AS_DEMO:I.NetworkControlStatus
AS_DEMO	NetworkReferenceStatus	AS_DEMO:I.NetworkReferenceStatus
AS_DEMO	AtReference	AS_DEMO:I.AtReference
AS_DEMO	In0	AS_DEMO:I.In0
AS_DEMO	In1	AS_DEMO:I.In1
AS_DEMO	In2	AS_DEMO:I.In2
AS_DEMO	In3	AS_DEMO:I.In3
AS_DEMO	Hand	AS_DEMO:I.Hand
AS_DEMO	DisconnectClosed	AS_DEMO:I.DisconnectClosed
AS_DEMO	BrakeContactorStatus	AS_DEMO:I.BrakeContactorStatus
AS_DEMO	OutputContactorStatus	AS_DEMO:I.OutputContactorStatus
AS_DEMO	OutputFrequency	AS_DEMO:I.OutputFrequency
AS_DEMO	Pt00DeviceOut	AS_DEMO:I.Pt00DeviceOut
AS_DEMO	Pt01DeviceOut	AS_DEMO:I.Pt01DeviceOut
AS_DEMO	Pt02DeviceOut	AS_DEMO:I.Pt02DeviceOut
AS_DEMO	Pt03DeviceOut	AS_DEMO:I.Pt03DeviceOut
AS_DEMO	Pt04DeviceOut	AS_DEMO:I.Pt04DeviceOut
AS_DEMO	Pt05DeviceOut	AS_DEMO:I.Pt05DeviceOut
AS_DEMO	Pt06DeviceOut	AS_DEMO:I.Pt06DeviceOut
AS_DEMO	Pt07DeviceOut	AS_DEMO:I.Pt07DeviceOut
AS_DEMO	Pt08DeviceOut	AS_DEMO:I.Pt08DeviceOut
AS_DEMO	Pt09DeviceOut	AS_DEMO:I.Pt09DeviceOut
AS_DEMO	Pt10DeviceOut	AS_DEMO:I.Pt10DeviceOut
AS_DEMO	Pt11DeviceOut	AS_DEMO:I.Pt11DeviceOut
AS_DEMO	Pt12DeviceOut	AS_DEMO:I.Pt12DeviceOut
AS_DEMO	Pt13DeviceOut	AS_DEMO:I.Pt13DeviceOut
AS_DEMO	Pt14DeviceOut	AS_DEMO:I.Pt14DeviceOut
AS_DEMO	LogicEnabled	AS_DEMO:I.LogicEnabled
AS_DEMO	Int00DeviceOut	AS_DEMO:I.Int00DeviceOut
AS_DEMO	Int01DeviceOut	AS_DEMO:I.Int01DeviceOut
AS_DEMO	Int02DeviceOut	AS_DEMO:I.Int02DeviceOut
AS_DEMO	Int03DeviceOut	AS_DEMO:I.Int03DeviceOut

Table 13 - Bulletin 284E Consume Assembly/Command Tag Explanation

Controller Output/ Command Tags	Tag Description/Use
RunForward	Command VFD forward
RunReverse	Command VFD reverse
ResetFault	Fault reset
JogForward	Command Jog forward per internal frequency
JogReverse	Command Jog reverse per internal frequency
OutA	Output A
OutB	Output B
AccelCtrl_0	VFD acceleration ramp 1
AccelCtrl_1	VFD acceleration ramp 2
DecelCtrl_0	VFD deceleration ramp 1
DecelCtrl_1	VFD deceleration ramp 2
DriveInput1	VFD Digit Input 1
DriveInput2	VFD Digit Input 2
DriveInput3	VFD Digit Input 3
DriveInput4	VFD Digit Input 4
FreqCommand	Logix commanded frequency
Pt00DeviceIn	Network input to DeviceLogix engine
Pt01DeviceIn	Network input to DeviceLogix engine
Pt02DeviceIn	Network input to DeviceLogix engine
Pt03DeviceIn	Network input to DeviceLogix engine
Pt04DeviceIn	Network input to DeviceLogix engine
Pt05DeviceIn	Network input to DeviceLogix engine
Pt06DeviceIn	Network input to DeviceLogix engine
Pt07DeviceIn	Network input to DeviceLogix engine
Pt08DeviceIn	Network input to DeviceLogix engine
Pt09DeviceIn	Network input to DeviceLogix engine
Pt10DeviceIn	Network input to DeviceLogix engine
Pt11DeviceIn	Network input to DeviceLogix engine
Pt12DeviceIn	Network input to DeviceLogix engine
Pt13DeviceIn	Network input to DeviceLogix engine
Pt14DeviceIn	Network input to DeviceLogix engine
Pt15DeviceIn	Network input to DeviceLogix engine

Table 14 - Bulletin 284E Produced Assembly/Status Tag Explanation

Controller Input/ Status Tags	Tag Description/Use
Fault	Communication Fault between PLC and Device (all 1's = Fault, all 0's = Normal)
TripPresent	Fault exists with unit
WarningPresent	Warning of potential fault
RunningForward	Motor commanded to run forward
RunningReverse	Motor commanded to run reverse
Ready	Control Power and 3-phase present
NetworkControlStatus	Start and Stop command comes from network (PLC or Connected Explicit Messaging)
NetworkReferenceStatus	Speed reference comes from the network (not DeviceLogix)
AtReference	At commanded speed reference
In0	Input 0
In1	Input 1
In2	Input 2
In3	Input 3
Hand	HOA is in Auto mode
DisconnectClosed	Disconnect is closed
BrakeContactorStatus	Source brake contactor status (1=close, 0=open)
OutputContactorStatus	Ouput contactor status (1=close, 0=open)
OutputFrequency	VFD frequency
Pt00DeviceOut	DeviceLogix network output status
Pt01DeviceOut	DeviceLogix network output status
Pt02DeviceOut	DeviceLogix network output status
Pt03DeviceOut	DeviceLogix network output status
Pt04DeviceOut	DeviceLogix network output status
Pt05DeviceOut	DeviceLogix network output status
Pt06DeviceOut	DeviceLogix network output status
Pt07DeviceOut	DeviceLogix network output status
Pt08DeviceOut	DeviceLogix network output status
Pt09DeviceOut	DeviceLogix network output status
Pt10DeviceOut	DeviceLogix network output status
Pt11DeviceOut	DeviceLogix network output status
Pt12DeviceOut	DeviceLogix network output status
Pt13DeviceOut	DeviceLogix network output status
Pt14DeviceOut	DeviceLogix network output status
LogicEnabled	DeviceLogix is enabled
Int00DeviceOut	Data reference by Parameter 13
Int01DeviceOut	Data reference by Parameter 14
Int02DeviceOut	Data reference by Parameter 15
Int03DeviceOut	Data reference by Parameter 16

Table 15 - Default Consume Assembly for Bulletin 280E, 281E

Instance 162 Default Consumed DOL and Reversing Starter								
Byte	**Bit 7**	**Bit 6**	**Bit 5**	**Bit 4**	**Bit 3**	**Bit 2**	**Bit 1**	**Bit 0**
0	OutB	OutA	—	—	—	ResetFault	RunReverse	RunForward
1	Pt07DeviceIn	Pt06DeviceIn	Pt05DeviceIn	Pt04DeviceIn	Pt03DeviceIn	Pt02DeviceIn	Pt01DeviceIn	Pt00DeviceIn
2	Pt15DeviceIn	Pt14DeviceIn	Pt13DeviceIn	Pt12DeviceIn	Pt11DeviceIn	Pt10DeviceIn	Pt09DeviceIn	Pt08DeviceIn

Table 16 - Bulletin 280E, 281E Controller Output/Command Tags

Controller Name	Name	Logix Tag Name
DEMO_REV	RunForward	DEMO_REV:O.RunForward
DEMO_REV	RunReverse	DEMO_REV:O.RunReverse
DEMO_REV	ResetFault	DEMO_REV:O.ResetFault
DEMO_REV	OutA	DEMO_REV:O.OutA
DEMO_REV	OutB	DEMO_REV:O.OutB
DEMO_REV	Pt00DeviceIn	DEMO_REV:O.Pt00DeviceIn
DEMO_REV	Pt01DeviceIn	DEMO_REV:O.Pt01DeviceIn
DEMO_REV	Pt02DeviceIn	DEMO_REV:O.Pt02DeviceIn
DEMO_REV	Pt03DeviceIn	DEMO_REV:O.Pt03DeviceIn
DEMO_REV	Pt04DeviceIn	DEMO_REV:O.Pt04DeviceIn
DEMO_REV	Pt05DeviceIn	DEMO_REV:O.Pt05DeviceIn
DEMO_REV	Pt06DeviceIn	DEMO_REV:O.Pt06DeviceIn
DEMO_REV	Pt07DeviceIn	DEMO_REV:O.Pt07DeviceIn
DEMO_REV	Pt08DeviceIn	DEMO_REV:O.Pt08DeviceIn
DEMO_REV	Pt09DeviceIn	DEMO_REV:O.Pt09DeviceIn
DEMO_REV	Pt10DeviceIn	DEMO_REV:O.Pt10DeviceIn
DEMO_REV	Pt11DeviceIn	DEMO_REV:O.Pt11DeviceIn
DEMO_REV	Pt12DeviceIn	DEMO_REV:O.Pt12DeviceIn
DEMO_REV	Pt13DeviceIn	DEMO_REV:O.Pt13DeviceIn
DEMO_REV	Pt14DeviceIn	DEMO_REV:O.Pt14DeviceIn
DEMO_REV	Pt15DeviceIn	DEMO_REV:O.Pt15DeviceIn

Table 17 -

Instance 150 "Starter Stat" - Default Status Assembly for Bulletin 280E, 281E Starters								
Byte	**Bit 7**	**Bit 6**	**Bit 5**	**Bit 4**	**Bit 3**	**Bit 2**	**Bit 1**	**Bit 0**
0	Reserved - {name}:I.Fault ❶							
1	Reserved - {name}:I.Fault ❶							
2	Reserved - {name}:I.Fault ❶							
3	Reserved - {name}:I.Fault ❶							
Byte	**Bit 7**	**Bit 6**	**Bit 5**	**Bit 4**	**Bit 3**	**Bit 2**	**Bit 1**	**Bit 0**
Byte	**Bit 7**	**Bit 6**	**Bit 5**	**Bit 4**	**Bit 3**	**Bit 2**	**Bit 1**	**Bit 0**
4	—	—	—	Ready	RunningReverse	RunningForward	WarningPresent	TripPresent
5	—	—	DisconnectClosed	Hand	In3	In2	In1	In0
6	Pt07DeviceOut	Pt06DeviceOut	Pt05DeviceOut	Pt04DeviceOut	Pt03DeviceOut	Pt02DeviceOut	Pt01DeviceOut	Pt00DeviceOut
7	LogicEnable	Pt14DeviceOut	Pt13DeviceOut	Pt12DeviceOut	Pt11DeviceOut	Pt10DeviceOut	Pt09DeviceOut	Pt08DeviceOut
8	Value of the parameter pointed to by "Parameter 13 Prod Assy Word 0" (low byte)" - ProducedWord0Param							
9	Value of the parameter pointed to by "Parameter 13 Prod Assy Word 0" (high byte)" - ProducedWord0Param							
10	Value of the parameter pointed to by "Parameter 14 Prod Assy Word 1" (low byte)" - ProducedWord1Param							
11	Value of the parameter pointed to by "Parameter 14 Prod Assy Word 1" (high byte)" - ProducedWord1Param							
12	Value of the parameter pointed to by "Parameter 15 Prod Assy Word 2" (low byte)" - ProducedWord2Param							
13	Value of the parameter pointed to by "Parameter 15 Prod Assy Word 2" (high byte)" - ProducedWord2Param							
14	Value of the parameter pointed to by "Parameter 16 Prod Assy Word 3" (low byte)" - ProducedWord3Param							
15	Value of the parameter pointed to by "Parameter 16 Prod Assy Word 3" (high byte)" - ProducedWord3Param							

❶ Identifies if a Communication Fault exists. If a communication loss is present the PLC writes four bytes of 1's to this tag. The user should monitor this tag to ensure the data is valid.

IMPORTANT The user PLC control program should monitor the **I.Fault** tag to ensure the data is accurate. When a communications fault occurs, the data in the consume and produce tags may not accurately reflect the status.

Table 18 - Bulletin 280E, 281E Controller Input/ Status Tags

Controller Name	Name	Logix Tag Name
DEMO_REV	Fault	DEMO_REV:I.Fault
DEMO_REV	TripPresent	DEMO_REV:I.TripPresent
DEMO_REV	WarningPresent	DEMO_REV:I.WarningPresent
DEMO_REV	RunningForward	DEMO_REV:I.RunningForward
DEMO_REV	RunningReverse	DEMO_REV:I.RunningReverse
DEMO_REV	Ready	DEMO_REV:I.Ready
DEMO_REV	In0	DEMO_REV:I.In0
DEMO_REV	In1	DEMO_REV:I.In1
DEMO_REV	In2	DEMO_REV:I.In2
DEMO_REV	In3	DEMO_REV:I.In3
DEMO_REV	Hand	DEMO_REV:I.Hand
DEMO_REV	DisconnectClosed	DEMO_REV:I.DisconnectClosed
DEMO_REV	Pt00DeviceOut	DEMO_REV:I.Pt00DeviceOut
DEMO_REV	Pt01DeviceOut	DEMO_REV:I.Pt01DeviceOut
DEMO_REV	Pt02DeviceOut	DEMO_REV:I.Pt02DeviceOut
DEMO_REV	Pt03DeviceOut	DEMO_REV:I.Pt03DeviceOut
DEMO_REV	Pt04DeviceOut	DEMO_REV:I.Pt04DeviceOut
DEMO_REV	Pt05DeviceOut	DEMO_REV:I.Pt05DeviceOut
DEMO_REV	Pt06DeviceOut	DEMO_REV:I.Pt06DeviceOut
DEMO_REV	Pt07DeviceOut	DEMO_REV:I.Pt07DeviceOut
DEMO_REV	Pt08DeviceOut	DEMO_REV:I.Pt08DeviceOut
DEMO_REV	Pt09DeviceOut	DEMO_REV:I.Pt09DeviceOut
DEMO_REV	Pt10DeviceOut	DEMO_REV:I.Pt10DeviceOut
DEMO_REV	Pt11DeviceOut	DEMO_REV:I.Pt11DeviceOut
DEMO_REV	Pt12DeviceOut	DEMO_REV:I.Pt12DeviceOut
DEMO_REV	Pt13DeviceOut	DEMO_REV:I.Pt13DeviceOut
DEMO_REV	Pt14DeviceOut	DEMO_REV:I.Pt14DeviceOut
DEMO_REV	LogicEnabled	DEMO_REV:I.LogicEnabled
DEMO_REV	ProducedWord0Param	DEMO_REV:I.ProducedWord0Param
DEMO_REV	ProducedWord1Param	DEMO_REV:I.ProducedWord1Param
DEMO_REV	ProducedWord2Param	DEMO_REV:I.ProducedWord2Param
DEMO_REV	ProducedWord3Param	DEMO_REV:I.ProducedWord3Param

Table 19 - Bulletin 280E, 281E Consume Assembly Command Tag Explanation

Controller Output/ Command Tags	Tag Description/Use
RunForward	Command VFD forward
RunReverse	Command VFD reverse
ResetFault	Fault reset
OutA	OutputA
OutB	OutputB
Pt00DeviceIn	Network input to DeviceLogix engine
Pt01DeviceIn	Network input to DeviceLogix engine
Pt02DeviceIn	Network input to DeviceLogix engine
Pt03DeviceIn	Network input to DeviceLogix engine
Pt04DeviceIn	Network input to DeviceLogix engine
Pt05DeviceIn	Network input to DeviceLogix engine
Pt06DeviceIn	Network input to DeviceLogix engine
Pt07DeviceIn	Network input to DeviceLogix engine
Pt08DeviceIn	Network input to DeviceLogix engine
Pt09DeviceIn	Network input to DeviceLogix engine
Pt10DeviceIn	Network input to DeviceLogix engine
Pt11DeviceIn	Network input to DeviceLogix engine
Pt12DeviceIn	Network input to DeviceLogix engine
Pt13DeviceIn	Network input to DeviceLogix engine
Pt14DeviceIn	Network input to DeviceLogix engine
Pt15DeviceIn	Network input to DeviceLogix engine

Table 20 - Bulletin 280E, 281E Produced Assembly Status Tag Explanation

Controller Input/Status Tags	Tag Description/Use
Fault	Communication Fault between PLC and Device (all 1's = Fault, all 0's = Normal)
TripPresent	Fault exists with unit
WarningPresent	Warning of potential fault
RunningForward	Motor commanded to run forward
RunningReverse	Motor commanded to run reverse
Ready	Control Power and 3-phase present
In0	Input 0
In1	Input 1
In2	Input 2
In3	Input 3
Hand	HOA is in Auto mode
DisconnectClosed	Disconnect is closed
Pt00DeviceOut	DeviceLogix network output status
Pt01DeviceOut	DeviceLogix network output status
Pt02DeviceOut	DeviceLogix network output status
Pt03DeviceOut	DeviceLogix network output status
Pt04DeviceOut	DeviceLogix network output status
Pt05DeviceOut	DeviceLogix network output status
Pt06DeviceOut	DeviceLogix network output status
Pt07DeviceOut	DeviceLogix network output status
Pt08DeviceOut	DeviceLogix network output status
Pt09DeviceOut	DeviceLogix network output status
Pt10DeviceOut	DeviceLogix network output status
Pt11DeviceOut	DeviceLogix network output status
Pt12DeviceOut	DeviceLogix network output status
Pt13DeviceOut	DeviceLogix network output status
Pt14DeviceOut	DeviceLogix network output status
LogicEnabled	DeviceLogix is enabled
ProducedWord0Param	Data reference by Parameter 13
ProducedWord1Param	Data reference by Parameter 14
ProducedWord2Param	Data reference by Parameter 15
ProducedWord3Param	Data reference by Parameter 16

Optional HOA Keypad Operation

Introduction

This chapter provides a basic understanding of the programming of the factory-installed optional built-in Hand/Off/Auto (HOA) keypad. The HOA keypad can be programmed for maintained or momentary operation.

Figure 72 - Optional HOA Keypads

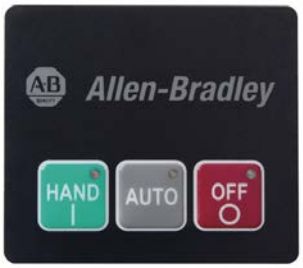

Available on Bulletin 280E



Available on Bulletin 281E



Available on Bulletin 284E

Keypad Description

The keys that are found on the optional HOA keypads are described below:

Table 21 - HOA Keypad – Key Description

	**HAND**	The Hand key initiates starter operation
	**AUTO**	The Auto key allows for Start/Stop control via the communications network
	**OFF**	If the starter is running, pressing the OFF key causes the starter to stop.
	**REV**	The REV key selects reverse direction of the motor
	**FWD**	The FWD key selects forward direction of the motor
	**DIR Arrow**	The Dir arrow selects the direction of the motor, either forward or reverse.
	**JOG**	When pressed, JOG will be initiated if no other control devices are sending a stop command. Releasing the key causes the drive to stop, using selected stop mode.

Figure 73 - Bulletin 280E/281E Hand -Off-Auto Selector Keypad

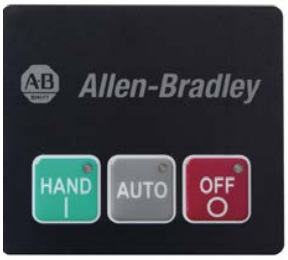

The following state transition matrix summarizes the HOA Keypad when Parameter 45 "Keypad Mode" is set to 1=momentary.

	HAND STOP	HAND FWD	AUTO
AUTO	Command motor OFF and transition to "AUTO"	Ignore	Ignore
HAND	Command motor ON and transition to "HAND FWD"	Ignore	Ignore
OFF	Ignore	Command motor OFF and transition to "HAND STOP"	Command motor OFF and transition to "HAND STOP"

The following state transition matrix summarizes the HOA Keypad when Parameter 45 "Keypad Mode" is set to 0=maintained.

	HAND STOP	HAND FWD	AUTO
NO KEY PRESSED	Ignore	Command motor OFF and transition to "HAND STOP"	Ignore
AUTO	Command motor OFF and transition to "AUTO"	Ignore	Ignore
HAND	Command motor ON and transition to "HAND FWD"	Ignore	Ignore
OFF	Ignore	Command motor OFF and transition to "HAND STOP"	Command motor OFF and transition to "HAND STOP"

Figure 74 - Bulletin 281E Hand-Off-Auto Selector Keypad with Forward/Reverse Function



The following state transition matrix summarizes the HOA behavior when Parameter 45 "Keypad Mode" is set to 1=momentary.

	HAND STOP	HAND FWD	HAND REV	AUTO
FWD	Set FWD LED	Ignore	Ignore	Set FWD LED
REV	Set REV LED	Ignore	Ignore	Set REV LED
AUTO	Command motor OFF and transition to "AUTO"	Ignore	Ignore	Ignore

HAND	If (FWD LED) transition to "HAND FWD"
	If (REV LED)
	transition to "HAND REV"
		Ignore	Ignore	Ignore

OFF	Ignore	Command motor OFF and transition to "HAND STOP"	Command motor OFF and transition to "HAND STOP"	Command motor OFF and transition to "HAND STOP"

The following state transition matrix summarizes the HOA behavior when Parameter 45 "Keypad Mode" is set to 0=maintained.

	HAND STOP	HAND FWD	HAND REV	AUTO
NO KEY PRESSED	Ignore	Command motor OFF and transition to "HAND STOP"	Command motor OFF and transition to "HAND STOP"	Ignore
FWD	Set FWD LED	Ignore	Ignore	Set FWD LED
REV	Set REV LED	Ignore	Ignore	Set REV LED
AUTO	Command motor OFF and transition to "AUTO"	Ignore	Ignore	Ignore

HAND	If (FWD LED) transition to "HAND FWD"
	If (REV LED)
	transition to "HAND REV"
		Ignore	Ignore	Ignore

OFF	Ignore	Command motor OFF and transition to "HAND STOP"	Command motor OFF and transition to "HAND STOP"	Command motor OFF and transition to "HAND STOP"

Figure 75 - Bulletin 284E Hand-Off-Auto Selector Keypad with JOG and Direction Arrow Functions



The following state transition matrix summarizes the Jog/HOA behavior when Parameter 45 "Keypad Mode" is set to 1 = momentary.

	HAND STOP	HAND FWD	HAND REV	JOG FWD	JOG REV	AUTO
REV FWD	If (FWD LED) Set REV LED Else If (REV LED) Set FWD LED	If (FWD LED) Set REV LED Else If (REV LED) Set FWD LED	If (FWD LED) Set REV LED Else If (REV LED) Set FWD LED	Ignore	Ignore	Ignore
JOG	If (FWD LED) transition to JOG FWD If (REV LED) transition to JOG REV	Ignore	Ignore	Ignore	Ignore	Ignore
AUTO	Command motor OFF and transition to AUTO	Ignore	Ignore	Ignore	Ignore	Ignore
HAND	If (FWD LED) transition to HAND FWD Else If (REV LED) transition to HAND REV	Ignore	Ignore	Ignore	Ignore	Ignore
No Key Pressed	Ignore	Ignore	Ignore	Command motor OFF and transition to HAND STOP	Command motor OFF and transition to HAND STOP	Ignore
OFF	Ignore	Command motor OFF and transition to HAND STOP	Command motor OFF and transition to HAND STOP	Command motor OFF and transition to HAND STOP	Command motor OFF and transition to HAND STOP	Command motor OFF and transition to HAND STOP

The following state transition matrix summarizes the Jog/HOA behavior when Parameter 45 “Keypad Mode” is set to 0 = maintained.

	HAND STOP	HAND FWD	HAND REV	JOG FWD	JOG REV	AUTO
No Key Pressed	Ignore	Command motor OFF and transition to HAND STOP	Command motor OFF and transition to HAND STOP	Command motor OFF and transition to HAND STOP	Command motor OFF and transition to HAND STOP	Ignore
	If (FWD LED) Set REV LED Else If (REV LED) Set FWD LED	Ignore	Ignore	Ignore	Ignore	Ignore
	If (FWD LED) transition to JOG FWD If (REV LED) Transition to JOG REV	Ignore	Ignore	Ignore	Ignore	Ignore
	Command motor OFF and Transition to AUTO	Ignore	Ignore	Ignore	Ignore	Ignore
	If (FWD LED) transition to HAND FWD If (REV LED) transition to HAND REV	Ignore	Ignore	Ignore	Ignore	Ignore
	Ignore	Command motor OFF and transition to HAND STOP	Command motor OFF and transition to HAND STOP	Command motor OFF and transition to HAND STOP	Command motor OFF and transition to HAND STOP	Command motor OFF and transition to HAND STOP

Note: In nearly all instances, if the processor detects multiple buttons are pressed simultaneously, the software interprets this as a “no button pressed” condition. The only exception to this rule is if multiple buttons are pressed and one of them is the “OFF” button. If the “OFF” button is pressed in combination with any combination of other buttons, the processor will interpret this the same as if the “OFF” button were pressed by itself.

Keypad and HOA Disable

Parameter 46 “Keypad Disable”, disables the “HAND”, “FWD”, “REV” and “Jog” buttons on the HOA keypad. The “OFF” and “AUTO” buttons are always enabled, even if Parameter 46 is set to “1=Disable”. In addition for Bulletin 284 the user can disable the HAND-Reverse and Jog-Reverse operation by setting parameter 195, Reverse Disable.

See Chapter C for an example how to dynamically disable the keypad.

Notes:

Bulletin 280E/281E/284E Programmable Parameters

Basic Setup Parameters

To configure the basic ArmorStart functionality see Table 22 below. These are the minimum setup configurations that are required for Bulletin 280E, 281E, or Bulletin 284E. There are additional capabilities and motor protection that are not enabled or left at their default values.

Table 22 - Quick Parameter Setup

Bulletin 280E, 281E	Bulletin 284E
106 FLA Setting **107** Overload Class **108** OL Reset Level	**131** Motor NP Volts **132** Motor NP Hertz **133** Motor OL Current **134** Minimum Freq **135** Maximum Freq **137** Stop Mode **138** Speed Reference **139** Accel Time 1 **140** Decel Time 1

Parameter Groups

Common to Bulletin 280E, 281E, and Bulletin 284E Units					Bulletin 284E Units Only
Basic Status	**Produced Assembly Config Group**	**Starter Protection**	**User I/O Config**	**Miscellaneous Config**	**Drive I/O Config**
1 Hdw Inputs **2** DeviceIn Data **3** DeviceOut Data **4** Trip Status **5** Starter Status **6** InternalLinkStat **7** Starter Command **22** Breaker Type **56** Base Enclosure **57** Base Options **58** Wiring Options **59** Starter Enclosure **60** Starter Options **61** Last Pr Fault **62** Warning Status **63** Base Trip	**13** Int00DeviceOut Cfg **14** Int01DeviceOut Cfg **15** Int02DeviceOut Cfg **16** Int03DeviceOut Cfg	**23** Pr FltResetMode **24** Pr Fault Enable **25** Pr Fault Reset **26** Str Net FltState **27** Str Net FltValue **28** Str Net IdlState **29** Str Net IdlValue	**30** Anti-bounce On Delay **31** Anti-bounce OFF Delay **32** In Sink/Source **33** OutA Pr FltState **34** OutA Pr FltValue **35** OutA Net FltState **36** OutA Net FltValue **37** OutA Net IdlState **38** OutA Net IdlValue **39** OutB Pr FltState **40** OutB Pr FltValue **41** OutB Net FltState **42** OutB Net FltValue **43** OutB Net IdlState **44** OutB Net IdlValue	**8** Network Override **9** Comm Override **45** Keypad Mode **46** Keypad Disable **47** Set To Defaults	**48** Drive Control **49** DrvIn Pr FltState **50** DrvIn Pr FltValue **51** DrvIn Net FltState **52** DrvIn Net FltValue **53** DrvIn Net IdlState **54** DrvIn Net IdlValue

Bulletin280E, 281E Units Only	Bulletin 284E Units Only				
Starter Display	**Drive Display**	**Drive Setup**	**Drive Advanced Setup**		
101 Phase A Current **102** Phase B Current **103** Phase C Current **104** Average Current **105** Therm Utilized	**101** Output Freq **102** Commanded Freq **103** Output Current **104** Output Voltage **105** DC Bus Voltage **106** Drive Status **107** Fault 1 Code **108** Fault 2 Code **109** Fault 3 Code **110** Process Display **112** Control Source **113** Contrl In Status **114** Dig In Status **115** Comm Status **116** Control SW Ver **117** Drive Type **118** Elapsed Run Time **122** Output Power **123** Output Power Fctr **124** Drive Temp **125** Counter Status **126** Timer Status **129** Torque Current	**131** Motor NP Volts **132** Motor NP Hertz **133** Motor OL Current **134** Minimum Freq **135** Maximum Freq **136** Start Source **137** Stop Mode **138** Speed Reference **139** Accel Time 1 **140** Decel Time 1 **141** Reset To Defaults **143** Motor OL Ret	**151** Digital In 1 Sel **152** Digital In 2 Sel **153** Digital In 3 Sel **154** Digital In 4 Sel **155** Relay Out Sel **156** Relay Out Level **167** Accel Time 2 **168** Decel Time 2 **169** Internal Freq **170** Preset Freq 0 **171** Preset Freq 1 **172** Preset Freq 2 **173** Preset Freq 3 **174** Preset Freq 4 **175** Preset Freq 5 **176** Preset Freq 6 **177** Preset Freq 7 **178** Jog Frequency **179** Jog Accel/Decel **180** DC Brake Time	**181** DC Brake Level **182** DB Resistor Sel **183** S Curve % **184** Boost Select **185** Start Boost **186** Brake Voltage **187** Brake Frequency **188** Maximum Voltage **189** Current Limit 1 **190** Motor OL Select **191** PWM Frequency **192** Auto Rstrt Tries **193** Auto Rstrt Delay **194** Start At PowerUp **195** Reverse Disable **196** Flying Start En **197** Compensation **198** SW Current Trip **199** Process Factor **200** Fault Clear	**201** Program Lock **205** Comm Loss Action **206** Comm Loss Time **214** Slip Hertz @ FLA **217** Bus Reg Mode **218** Current Limit 2 **219** Skip Frequency **220** Skip Freq Band **221** Stall Fault Time **224** Var PWM Disable **225** Torque Perf Mode **226** Motor NP FLA **227** Autotune **228** IR Voltage Drop **229** Flux Current Ref **260** EM Brk OFF Delay **261** EM Brk On Delay **262** MOP Reset Sel **263** DB Threshold **264** Comm Write Mode
Starter Setup **106** FLA Setting **107** Overload Class **108** OL Reset Level					

ArmorStart EtherNet/IP Parameters

Introduction

This chapter describes each programmable parameter and its function.

Parameter Programming

Each Distributed Motor Controller type has a common set of parameters followed by a set of parameters that pertain to the individual starter type. Parameters 1…100 are common to all ArmorStart devices.

IMPORTANT Parameter setting changes take effect immediately unless otherwise noted in the parameter listing. These changes maybe immediate even during the "running" status.

Bulletin 280E/281E

Basic Status Group

Hdw Inputs This parameter provides status of hardware inputs.	Parameter Number	1
	Access Rule	GET
	Data Type	WORD
	Group	Basic Status
	Units	—
	Minimum Value	0
	Maximum Value	15
	Default Value	0

Bit				Function
3	**2**	**1**	**0**	
—	—	—	X	In0
—	—	X	—	In1
—	X	—	—	In2
X	—	—	—	In3

DeviceIn Data This parameter provides status of network device inputs.	Parameter Number	2
	Access Rule	GET
	Data Type	WORD
	Group	Basic Status
	Units	—
	Minimum Value	0
	Maximum Value	65535
	Default Value	0

Bit																**Function**
15	**14**	**13**	**12**	**11**	**10**	**9**	**8**	**7**	**6**	**5**	**4**	**3**	**2**	**1**	**0**	
—	—	—	—	—	—	—	—	—	—	—	—	—	—	—	X	Pt00DeviceIn
—	—	—	—	—	—	—	—	—	—	—	—	—	—	X	—	Pt01DeviceIn
—	—	—	—	—	—	—	—	—	—	—	—	—	X	—	—	Pt02DeviceIn
—	—	—	—	—	—	—	—	—	—	—	—	X	—	—	—	Pt03DeviceIn
—	—	—	—	—	—	—	—	—	—	—	X	—	—	—	—	Pt04DeviceIn
—	—	—	—	—	—	—	—	—	—	X	—	—	—	—	—	Pt05DeviceIn
—	—	—	—	—	—	—	—	—	X	—	—	—	—	—	—	Pt06DeviceIn
—	—	—	—	—	—	—	—	X	—	—	—	—	—	—	—	Pt07DeviceIn
—	—	—	—	—	—	—	X	—	—	—	—	—	—	—	—	Pt08DeviceIn
—	—	—	—	—	—	X	—	—	—	—	—	—	—	—	—	Pt09DeviceIn
—	—	—	—	—	X	—	—	—	—	—	—	—	—	—	—	Pt10DeviceIn
—	—	—	—	X	—	—	—	—	—	—	—	—	—	—	—	Pt11DeviceIn
—	—	—	X	—	—	—	—	—	—	—	—	—	—	—	—	Pt12DeviceIn
—	—	X	—	—	—	—	—	—	—	—	—	—	—	—	—	Pt13DeviceIn
—	X	—	—	—	—	—	—	—	—	—	—	—	—	—	—	Pt14DeviceIn
X	—	—	—	—	—	—	—	—	—	—	—	—	—	—	—	Pt15DeviceIn

DeviceOut Data This parameter provides status of network device outputs.	Parameter Number	3
	Access Rule	GET
	Data Type	WORD
	Group	Basic Status
	Units	—
	Minimum Value	0
	Maximum Value	32767
	Default Value	0

Bit																**Function**
15	**14**	**13**	**12**	**11**	**10**	**9**	**8**	**7**	**6**	**5**	**4**	**3**	**2**	**1**	**0**	
—	—	—	—	—	—	—	—	—	—	—	—	—	—	—	X	Pt00DeviceOut
—	—	—	—	—	—	—	—	—	—	—	—	—	—	X	—	Pt01DeviceOut
—	—	—	—	—	—	—	—	—	—	—	—	—	X	—	—	Pt02DeviceOut
—	—	—	—	—	—	—	—	—	—	—	—	X	—	—	—	Pt03DeviceOut
—	—	—	—	—	—	—	—	—	—	—	X	—	—	—	—	Pt04DeviceOut
—	—	—	—	—	—	—	—	—	—	X	—	—	—	—	—	Pt05DeviceOut
—	—	—	—	—	—	—	—	—	X	—	—	—	—	—	—	Pt06DeviceOut
—	—	—	—	—	—	—	—	X	—	—	—	—	—	—	—	Pt07DeviceOut
—	—	—	—	—	—	—	X	—	—	—	—	—	—	—	—	Pt08DeviceOut
—	—	—	—	—	—	X	—	—	—	—	—	—	—	—	—	Pt09DeviceOut
—	—	—	—	—	X	—	—	—	—	—	—	—	—	—	—	Pt10DeviceOut
—	—	—	—	X	—	—	—	—	—	—	—	—	—	—	—	Pt11DeviceOut
—	—	—	X	—	—	—	—	—	—	—	—	—	—	—	—	Pt12DeviceOut
—	—	X	—	—	—	—	—	—	—	—	—	—	—	—	—	Pt13DeviceOut
—	X	—	—	—	—	—	—	—	—	—	—	—	—	—	—	Pt14DeviceOut
X	—	—	—	—	—	—	—	—	—	—	—	—	—	—	—	Reserved

Trip Status This parameter provides trip identification.	Parameter Number	4
	Access Rule	GET
	Data Type	WORD
	Group	Basic Status
	Units	—
	Minimum Value	0
	Maximum Value	16383
	Default Value	0

Bit																**Function**
15	**14**	**13**	**12**	**11**	**10**	**9**	**8**	**7**	**6**	**5**	**4**	**3**	**2**	**1**	**0**	
—	—	—	—	—	—	—	—	—	—	—	—	—	—	—	X	Short Circuit
—	—	—	—	—	—	—	—	—	—	—	—	—	—	X	—	Overload
—	—	—	—	—	—	—	—	—	—	—	—	—	X	—	—	Phase Loss
—	—	—	—	—	—	—	—	—	—	—	—	X	—	—	—	Reserved
—	—	—	—	—	—	—	—	—	—	—	X	—	—	—	—	Reserved
—	—	—	—	—	—	—	—	—	—	X	—	—	—	—	—	Control Power
—	—	—	—	—	—	—	—	—	X	—	—	—	—	—	—	I/O Fault
—	—	—	—	—	—	—	—	X	—	—	—	—	—	—	—	Over Temperature
—	—	—	—	—	—	—	X	—	—	—	—	—	—	—	—	Phase Imbalance
—	—	—	—	—	—	X	—	—	—	—	—	—	—	—	—	A3 Power Loss
—	—	—	—	—	X	—	—	—	—	—	—	—	—	—	—	Reserved
—	—	—	—	X	—	—	—	—	—	—	—	—	—	—	—	Reserved
—	—	—	X	—	—	—	—	—	—	—	—	—	—	—	—	EEprom
—	—	X	—	—	—	—	—	—	—	—	—	—	—	—	—	HW Fault
X	X	—	—	—	—	—	—	—	—	—	—	—	—	—	—	Reserved

Starter Status This parameter provides the status of the starter.	Parameter Number	5
	Access Rule	GET
	Data Type	WORD
	Group	Basic Status
	Units	—
	Minimum Value	0
	Maximum Value	16383
	Default Value	0

Bit																Function
15	14	13	12	11	10	9	8	7	6	5	4	3	2	1	0	
—	—	—	—	—	—	—	—	—	—	—	—	—	—	—	X	TripPresent
—	—	—	—	—	—	—	—	—	—	—	—	—	—	X	—	WarningPresent
—	—	—	—	—	—	—	—	—	—	—	—	—	X	—	—	RunningForward
—	—	—	—	—	—	—	—	—	—	—	—	X	—	—	—	RunningReverse
—	—	—	—	—	—	—	—	—	—	—	X	—	—	—	—	Ready
—	—	—	—	—	—	—	—	—	—	X	—	—	—	—	—	Net Ctl Status
—	—	—	—	—	—	—	—	—	X	—	—	—	—	—	—	Reserved
—	—	—	—	—	—	—	—	X	—	—	—	—	—	—	—	At Reference
—	—	—	—	—	—	—	X	—	—	—	—	—	—	—	—	Reserved
—	—	—	—	—	—	X	—	—	—	—	—	—	—	—	—	Reserved
—	—	—	—	—	X	—	—	—	—	—	—	—	—	—	—	Reserved
—	—	—	—	X	—	—	—	—	—	—	—	—	—	—	—	Keypad Hand Mode
—	—	—	X	—	—	—	—	—	—	—	—	—	—	—	—	HOA Status
—	—	X	—	—	—	—	—	—	—	—	—	—	—	—	—	DisconnectClosed
X	X	—	—	—	—	—	—	—	—	—	—	—	—	—	—	Reserved

InternalLinkStat Status of the internal network connections.	Parameter Number	6
	Access Rule	GET
	Data Type	WORD
	Group	Basic Status
	Units	—
	Minimum Value	0
	Maximum Value	31
	Default Value	0

Bit																**Function:**
15	**14**	**13**	**12**	**11**	**10**	**9**	**8**	**7**	**6**	**5**	**4**	**3**	**2**	**1**	**0**	
—	—	—	—	—	—	—	—	—	—	—	—	—	—	—	X	Explicit Connection
—	—	—	—	—	—	—	—	—	—	—	—	—	—	X	—	I/O Connection
—	—	—	—	—	—	—	—	—	—	—	—	—	X	—	—	Explicit Fault
—	—	—	—	—	—	—	—	—	—	—	—	X	—	—	—	I/O Fault
—	—	—	—	—	—	—	—	—	—	—	X	—	—	—	—	I/O Idle
X	X	X	X	X	X	X	X	X	X	X	—	—	—	—	—	Reserved

Starter Command The parameter provides the status of the starter command.	Parameter Number	7
	Access Rule	GET
	Data Type	WORD
	Group	Basic Status
	Units	—
	Minimum Value	0
	Maximum Value	255
	Default Value	0

Bit								**Function:**
7	**6**	**5**	**4**	**3**	**2**	**1**	**0**	
—	—	—	—	—	—	—	X	Run Fwd
—	—	—	—	—	—	X	—	Run Rev
—	—	—	—	—	X	—	—	Fault Reset
—	—	—	—	X	—	—	—	Reserved
—	—	—	X	—	—	—	—	Reserved
—	—	X	—	—	—	—	—	Reserved
—	X	—	—	—	—	—	—	OutA
X	—	—	—	—	—	—	—	OutB

Breaker Type This parameter identifies the Bulletin 140M used in this product. 0 = 140M-D8N-C10 1 = 140M-D8N-C25	Parameter Number	22
	Access Rule	GET/SET
	Data Type	BOOL
	Group	Basic Status
	Units	—
	Minimum Value	0
	Maximum Value	1
	Default Value	0

Base Enclosure Indicates the ArmorStart Base unit enclosure rating. Bit 0 = IP67 Bit 1 = Reserved Bit 2…15 = Reserved	Parameter Number	56
	Access Rule	GET
	Data Type	WORD
	Group	Basic Status
	Units	—
	Minimum Value	0
	Maximum Value	1
	Default Value	1

Base Options Indicates the options for the ArmorStart Base unit. Bit 0 = Output Fuse Bit 1 = Reserved Bit 2 = CP Fuse Detect Bits 3…7 = Reserved Bit 8 = 10A Base Bit 9 = 25A Base Bit 10…15 = Reserved	Parameter Number	57
	Access Rule	GET
	Data Type	WORD
	Group	Basic Status
	Units	—
	Minimum Value	0
	Maximum Value	517
	Default Value	0

Wiring Options Bit 0 = Conduit Bit 1 = Round Media Bit 2 = 28xG Gland Bits 3…15 = Reserved	Parameter Number	58
	Access Rule	GET
	Data Type	WORD
	Group	Basic Status
	Units	—
	Minimum Value	0
	Maximum Value	4
	Default Value	0

Starter Enclosure Bit 0 = IP67 Bit 1 = Reserved Bit 2 = Sil3/Cat4 Bit 3…15 = Reserved	Parameter Number	59
	Access Rule	GET
	Data Type	WORD
	Group	Basic Status
	Units	—
	Minimum Value	0
	Maximum Value	4
	Default Value	1

Starter Options Bit 0 = Full Keypad Bit 1 = Reserved Bit 2 = Source Brake Bit 3 = Reserved Bit 4 = Reserved Bit 5 = Reserved Bit 6 = Reserved Bit 7 = Reserved Bit 8 = Reserved Bit 9…15 = Reserved	Parameter Number	60
	Access Rule	GET
	Data Type	WORD
	Group	Basic Status
	Units	—
	Minimum Value	0
	Maximum Value	66535
	Default Value	0

Last PR Fault 0 = None 1 = Hardware Short Circuit 2 = Software Short Circuit 3 = Motor Overload 4 = Reserved 5 = Phase Loss 6…12 = Reserved 13 = Control Power Loss 14 = Control Power Fuse 15 = I/O Short 16 = Output Fuse 17 = Overtemp 18 = Reserved 19 = Phase Imbalance 20 = Reserved 21 = A3 Power Loss 22 = Internal Comm 23…26 = Reserved 27 = MCB EEPROM 28 = Base EEPROM 29 = Reserved 30 = Wrong Base 31 = Wrong CTs 32…100 = Reserved	Parameter Number	61
	Access Rule	GET
	Data Type	UINT
	Group	Basic Status
	Units	—
	Minimum Value	0
	Maximum Value	100
	Default Value	0

Warning Status This parameter warns the user of a condition, without faulting.	Parameter Number	62
	Access Rule	GET
	Data Type	WORD
	Group	Basic Status
	Units	—
	Minimum Value	0
	Maximum Value	65535
	Default Value	0

Warnings are always enabled. The warning conditions are reported even if the corresponding fault conditions are disabled.

Warning bits in the Warning Status parameter are cleared automatically when the warning condition is no longer present.

Bit																**Warning**
15	**14**	**13**	**12**	**11**	**10**	**9**	**8**	**7**	**6**	**5**	**4**	**3**	**2**	**1**	**0**	
—	—	—	—	—	—	—	—	—	—	—	—	—	—	—	X	Reserved
—	—	—	—	—	—	—	—	—	—	—	—	—	—	X	—	Reserved
—	—	—	—	—	—	—	—	—	—	—	—	—	X	—	—	Phase Loss
—	—	—	—	—	—	—	—	—	—	—	—	X	—	—	—	Reserved
—	—	—	—	—	—	—	—	—	—	—	X	—	—	—	—	Reserved
—	—	—	—	—	—	—	—	—	—	X	—	—	—	—	—	Control Power
—	—	—	—	—	—	—	—	—	X	—	—	—	—	—	—	I/O Warning
—	—	—	—	—	—	—	—	X	—	—	—	—	—	—	—	Reserved
—	—	—	—	—	—	—	X	—	—	—	—	—	—	—	—	Phase Imbalance
—	—	—	—	—	—	X	—	—	—	—	—	—	—	—	—	A3 Power Loss
—	—	—	—	—	X	—	—	—	—	—	—	—	—	—	—	Reserved
—	—	—	—	X	—	—	—	—	—	—	—	—	—	—	—	Reserved
—	—	—	X	—	—	—	—	—	—	—	—	—	—	—	—	Reserved
—	—	X	—	—	—	—	—	—	—	—	—	—	—	—	—	Hardware
X	X	—	—	—	—	—	—	—	—	—	—	—	—	—	—	Reserved

Base Trip The parameter determines the status of the Base Module Trip Status.	Parameter Number	63
	Access Rule	GET
	Data Type	WORD
	Group	Basic Status
	Units	—
	Minimum Value	0
	Maximum Value	65535
	Default Value	0

Bit																Warning
15	14	13	12	11	10	9	8	7	6	5	4	3	2	1	0	
—	—	—	—	—	—	—	—	—	—	—	—	—	—	—	X	EEPROM Fault
—	—	—	—	—	—	—	—	—	—	—	—	—	—	X	—	Internal Comm
—	—	—	—	—	—	—	—	—	—	—	—	—	X	—	—	Hardware Fault
—	—	—	—	—	—	—	—	—	—	—	—	X	—	—	—	Control Module
X	X	X	X	X	X	X	X	X	X	X	X	—	—	—	—	Reserved

Produced Assembly Config Group

Int00DeviceOut Cfg This parameter is used to specify Int00DeviceOut of produced assembly 150 or 151.	Parameter Number	13
	Access Rule	GET/SET
	Data Type	USINT
	Group	Produced Assembly Config
	Units	—
	Minimum Value	0
	Maximum Value	108
	Default Value	1

Int01DeviceOut Cfg This parameter is used to specify Int01DeviceOut of produced assembly 150 or 151.	Parameter Number	14
	Access Rule	GET/SET
	Data Type	USINT
	Group	Produced Assembly Config
	Units	—
	Minimum Value	0
	Maximum Value	108
	Default Value	4

Int02DeviceOut Cfg This parameter is used to specify Int02DeviceOut of produced assembly 150 or 151.	Parameter Number	15
	Access Rule	GET/SET
	Data Type	USINT
	Group	Produced Assembly Config
	Units	—
	Minimum Value	0
	Maximum Value	108
	Default Value	5

Int03DeviceOut Cfg This parameter is used to specify Int03DeviceOut of produced assembly 150 or 151.	Parameter Number	16
	Access Rule	GET/SET
	Data Type	USINT
	Group	Produced Assembly Config
	Units	—
	Minimum Value	0
	Maximum Value	108
	Default Value	6

Starter Protection Group

Pr FltReset Mode This parameter configures the Protection Fault reset mode. 0 = Manual 1 = Automatic (Faults are cleared automatically when the fault condition is corrected)	Parameter Number	23
	Access Rule	GET/SET
	Data Type	BOOL
	Group	Starter Protection
	Units	—
	Minimum Value	0
	Maximum Value	1
	Default Value	0

Pr Fault Enable This parameter enables the Protection Fault by setting the bit to 1.	Parameter Number	24
	Access Rule	GET/SET
	Data Type	WORD
	Group	Starter Protection
	Units	—
	Minimum Value	12419
	Maximum Value	13287
	Default Value	12419

Bit														Function
13	12	11	10	9	8	7	6	5	4	3	2	1	0	
—	—	—	—	—	—	—	—	—	—	—	—	—	X	Short Circuit ❶
—	—	—	—	—	—	—	—	—	—	—	—	X	—	Overload ❶
—	—	—	—	—	—	—	—	—	—	—	X	—	—	Phase Loss
—	—	—	—	—	—	—	—	—	—	X	—	—	—	Reserved
—	—	—	—	—	—	—	—	—	X	—	—	—	—	Reserved
—	—	—	—	—	—	—	—	X	—	—	—	—	—	Control Power
—	—	—	—	—	—	—	X	—	—	—	—	—	—	I/O Fault
—	—	—	—	—	—	X	—	—	—	—	—	—	—	Over Temperature ❶
—	—	—	—	—	X	—	—	—	—	—	—	—	—	Phase Imbalance
—	—	—	—	X	—	—	—	—	—	—	—	—	—	A3 Power Loss
—	—	—	X	—	—	—	—	—	—	—	—	—	—	Reserved
—	—	X	—	—	—	—	—	—	—	—	—	—	—	Reserved
—	X	—	—	—	—	—	—	—	—	—	—	—	—	EEprom ❶
X	—	—	—	—	—	—	—	—	—	—	—	—	—	HW Fault ❶

❶ Cannot be disabled

Pr Fault Reset	Parameter Number	25
This parameter resets the Protection Fault on a transition of 0 > 1.	Access Rule	GET/SET
	Data Type	BOOL
	Group	Starter Protection
	Units	—
	Minimum Value	0
	Maximum Value	1
	Default Value	0

Str Net FltState	Parameter Number	26
This parameter along with Parameter 27 (Str Net FltValue), defines how the starter responds when a fault occurs as determined by Parameter 27. Allows Starter to hold last state or go to FltValue on NetFaults. 0 = Goto Fault Value 1 = Hold Last State	Access Rule	GET/SET
	Data Type	BOOL
	Group	Starter Protection
	Units	—
	Minimum Value	0
	Maximum Value	1
	Default Value	0

Str Net FltValue This parameter determines how the starter is commanded in the event of a fault. State the Starter goes to on a Net Flt if Parameter 26 (Str Net FltState) = 0 (Goto Fault Value). 0 = OFF 1 = ON	Parameter Number	27
	Access Rule	GET
	Data Type	BOOL
	Group	Starter Protection
	Units	—
	Minimum Value	0
	Maximum Value	1
	Default Value	0

Str Net IdlState This parameter along with Parameter 29 (Str Net IdlValue), defines how the starter will respond when a network is idle as determined by Parameter 29. 0 = Goto Idle Value 1 = Hold Last State	Parameter Number	28
	Access Rule	GET/SET
	Data Type	BOOL
	Group	Starter Protection
	Units	—
	Minimum Value	0
	Maximum Value	1
	Default Value	0

Str Net IdlValue This parameter determines the state that starter assumes when the network is idle and Parameter 28 (Str Net IdlState) is set to "0". 0 = OFF 1 = ON	Parameter Number	29
	Access Rule	GET
	Data Type	BOOL
	Group	Starter Protection
	Units	—
	Minimum Value	0
	Maximum Value	1
	Default Value	0

User I/O Configuration Group

Anti-bounce On Delay This parameter allows the installer to program a time duration before an input is reported "ON" (Anti-bounce).	Parameter Number	30
	Access Rule	GET/SET
	Data Type	UINT
	Group	User I/O Config.
	Units	ms
	Minimum Value	0
	Maximum Value	65
	Default Value	0

Anti-bounce OFF Delay This parameter allows the installer to program a time duration before an input is reported "OFF" (Anti-bounce).	Parameter Number	31
	Access Rule	GET/SET
	Data Type	UINT
	Group	User I/O Config.
	Units	ms
	Minimum Value	0
	Maximum Value	65
	Default Value	0

In Sink/Source This parameter allows the installer to program the inputs to be sink or source. 0 = Sink 1 = Source	Parameter Number	32
	Access Rule	GET/SET
	Data Type	BOOL
	Group	User I/O Config.
	Units	—
	Minimum Value	0
	Maximum Value	1
	Default Value	0

OutA Pr FltState This parameter along with Parameter 34 (OutA Pr FltValue), defines how Output A will respond when a protection trip occurs. 0 = Goto Pr FltValue 1 = Ignore Pr Flt When set to "1", Output A continues to operate as command via the network. When set to "0", Output A opens or closes as determined by setting in Parameter 34.	Parameter Number	33
	Access Rule	GET/SET
	Data Type	BOOL
	Group	User I/O Config.
	Units	—
	Minimum Value	0
	Maximum Value	1
	Default Value	0

OutA Pr FltValue This parameter determines the state the Output A assumes when a trip occurs and Parameter 33 (OutA Pr FltState) is set to "0". 0 = Open 1 = Close	Parameter Number	34
	Access Rule	GET/SET
	Data Type	BOOL
	Group	User I/O Config.
	Units	—
	Minimum Value	0
	Maximum Value	1
	Default Value	0

OutA Net FltState	Parameter Number	35
This parameter along with Parameter 36 (OutA Net FltValue), defines how Output A will respond when a network fault occurs. 0 = Goto Net FltValue 1 = Hold Last State When set to "1", Output A will hold state before trip occurrence. When set to "0", Output A opens or closes as determined by setting in Parameter 36.	Access Rule	GET/SET
	Data Type	BOOL
	Group	User I/O Config.
	Units	—
	Minimum Value	0
	Maximum Value	1
	Default Value	0

OutA Net FltValue	Parameter Number	36
This parameter determines the state that Output A assumes when a network fault occurs and Parameter 35 (OutA Net FltState) is set to "0". 0 = Open 1 = Close	Access Rule	GET/SET
	Data Type	BOOL
	Group	User I/O Config.
	Units	—
	Minimum Value	0
	Maximum Value	1
	Default Value	0

OutA Net IdlState	Parameter Number	37
This parameter along with Parameter 38 (OutA Net IdlValue), defines how Output A will respond when the network is idle. 0 = Goto Net IdlValue 1 = Hold Last State When set to "0", Output A opens or closes as determined by the setting in Parameter 38.	Access Rule	GET/SET
	Data Type	BOOL
	Group	User I/O Config.
	Units	—
	Minimum Value	0
	Maximum Value	1
	Default Value	0

OutA Net IdlValue	Parameter Number	38
This parameter determines the state that Output A assumes when the network is idle and Parameter 37 (OutA Net IdlState) is set to "0". 0 = Open 1 = Close	Access Rule	GET/SET
	Data Type	BOOL
	Group	User I/O Config.
	Units	—
	Minimum Value	0
	Maximum Value	1
	Default Value	0

OutB Pr FltState	Parameter Number	39
This parameter along with Parameter 40 (OutB Pr FltValue), defines how Output B will respond when a protection trip occurs. 0 = Goto PrFlt Value 1 = Ignore PrFlt When set to "1", Output B continues to operate as command via the network. When set to "0", Output B opens or closes as determined by setting in Parameter 40.	Access Rule	GET/SET
	Data Type	BOOL
	Group	User I/O Config.
	Units	—
	Minimum Value	0
	Maximum Value	1
	Default Value	0

OutB Pr FltValue	Parameter Number	40
This parameter determines the state the Out B assumes when a protection trip occurs and Parameter 39 (OutB Pr FltState) is set to "0". 0 = Open 1 = Close	Access Rule	GET/SET
	Data Type	BOOL
	Group	User I/O Config.
	Units	—
	Minimum Value	0
	Maximum Value	1
	Default Value	0

OutB Net FltState	Parameter Number	41
This parameter along with Parameter 42 (OutB Net FltValue), defines how Output B will respond when a network fault occurs. 0 = Goto Idle Value 1 = Hold Last State When set to "1", Output B will hold state before trip occurrence. When set to "0", Output B opens or closes as determined by setting in Parameter 42.	Access Rule	GET/SET
	Data Type	BOOL
	Group	User I/O Config.
	Units	—
	Minimum Value	0
	Maximum Value	1
	Default Value	0

OutB Net FltValue	Parameter Number	42
This parameter determines the state that Output B assumes when a network fault occurs and Parameter 41 (OutB Net FltState) is set to "0". 0 = Open 1 = Close	Access Rule	GET/SET
	Data Type	BOOL
	Group	User I/O Config.
	Units	—
	Minimum Value	0
	Maximum Value	1
	Default Value	0

OutB Net IdlState This parameter along with Parameter 44 (OutB Net IdlValue), defines how Output B will respond when the network is idle. 0 = Goto PrFlt Value 1 = Ignore PrFlt When set to "0", Output B opens or closes as determined by the setting in Parameter 44.	Parameter Number	43
	Access Rule	GET/SET
	Data Type	BOOL
	Group	User I/O Config.
	Units	—
	Minimum Value	0
	Maximum Value	1
	Default Value	0

OutB Net IdlValue This parameter determines the state that Output B assumes when the network is idle and Parameter 43 (OutB Net IdlState) is set to "0". 0 = Open 1 = Close	Parameter Number	44
	Access Rule	GET/SET
	Data Type	BOOL
	Group	User I/O Config.
	Units	—
	Minimum Value	0
	Maximum Value	1
	Default Value	0

Miscellaneous Configuration Group

Network Override This parameter allows for the local logic to override a Network fault. 0 = Disable 1 = Enable	Parameter Number	8
	Access Rule	GET/SET
	Data Type	BOOL
	Group	Misc. Config.
	Units	—
	Minimum Value	0
	Maximum Value	1
	Default Value	0

Comm Override This parameter allows for local logic to override the absence of an I/O connection. 0 = Disable 1 = Enable	Parameter Number	9
	Access Rule	GET/SET
	Data Type	BOOL
	Group	Misc. Config.
	Units	—
	Minimum Value	0
	Maximum Value	1
	Default Value	0

Keypad Mode This parameter selects if the keypad operation is maintained or momentary. 0 = Maintained 1 = Momentary	Parameter Number	45
	Access Rule	GET/SET
	Data Type	BOOL
	Group	Misc. Config.
	Units	—
	Minimum Value	0
	Maximum Value	1
	Default Value	0

Keypad Disable This parameter disables all keypad function except for the “OFF” and “RESET” buttons. 0 = Not Disabled 1 = Disabled	Parameter Number	46
	Access Rule	GET/SET
	Data Type	BOOL
	Group	Misc. Config.
	Units	—
	Minimum Value	0
	Maximum Value	1
	Default Value	0

Set to Defaults This parameter if set to “1” will set the device to the factory defaults (but will not cause the ArmorStart to reboot). 0 = No Operation 1 = Set to Defaults	Parameter Number	47
	Access Rule	GET/SET
	Data Type	BOOL
	Group	Misc. Config.
	Units	—
	Minimum Value	0
	Maximum Value	1
	Default Value	0

Starter Display Group (Bulletin 280E/281E only)

Phase A Current This parameter provides the current of Phase A measured n increments of $1/10^{th}$ of an ampere.	Parameter Number	101
	Access Rule	GET/SET
	Data Type	INT
	Group	Starter Display
	Units	xx.x Amps
	Minimum Value	0
	Maximum Value	32767
	Default Value	0

Phase B Current This parameter provides the current of Phase B measured in increments of 1/10th of an ampere.	Parameter Number	102
	Access Rule	GET/SET
	Data Type	INT
	Group	Starter Display
	Units	xx.x Amps
	Minimum Value	0
	Maximum Value	32767
	Default Value	0

Phase C Current This parameter provides the current of Phase C measured in increments of 1/10th of an ampere.	Parameter Number	103
	Access Rule	GET/SET
	Data Type	INT
	Group	Starter Display
	Units	xx.x Amps
	Minimum Value	0
	Maximum Value	32767
	Default Value	0

Average Current This parameter provides the average current that is measured in increments of 1/10th of an ampere.	Parameter Number	104
	Access Rule	GET/SET
	Data Type	INT
	Group	Starter Display
	Units	xx.x Amps
	Minimum Value	0
	Maximum Value	32767
	Default Value	0

Therm Utilized This parameter displays the % Thermal Capacity used.	Parameter Number	105
	Access Rule	GET/SET
	Data Type	USINT
	Group	Starter Display
	Units	% FLA
	Minimum Value	0
	Maximum Value	100
	Default Value	0

Starter Setup Group (Bulletin 280E, 281E only)

FLA Setting The motor's full load current rating is programmed in this parameter.	Parameter Number	106
	Access Rule	GET/SET
	Data Type	INT
	Group	Starter Setup
	Units	xx.x Amps
	Minimum Value	See Table 23.
	Maximum Value	See Table 23.
	Default Value	See Table 23.

Table 23 - FLA Setting Ranges and Default Values (with indicated setting precision)

FLA Current Range (A)		Default Value
Minimum Value	**Maximum Value**	
0.24	1.2	0.24
0.5	2.5	0.5
1.1	5.5	1.1
3.2	16.0	3.2

Overload Class This parameter allows the installer to select the overload class. 1 = Overload Class 10 2 = Overload Class 15 3 = Overload Class 20	Parameter Number	107
	Access Rule	GET/SET
	Data Type	USINT
	Group	Starter Setup
	Units	xx.x Amps
	Minimum Value	1
	Maximum Value	3
	Default Value	1

OL Reset Level This parameter allows the installer select the % Thermal Capacity that an overload can be cleared.	Parameter Number	108
	Access Rule	GET/SET
	Data Type	USINT
	Group	Starter Setup
	Units	% FLA
	Minimum Value	0
	Maximum Value	100
	Default Value	75

Bulletin 284E

Basic Status Group

Hdw Inputs This parameter provides status of hardware inputs.	Parameter Number	1
	Access Rule	GET
	Data Type	WORD
	Group	Basic Status
	Units	—
	Minimum Value	0
	Maximum Value	15
	Default Value	0

Bit				Function
3	**2**	**1**	**0**	
—	—	—	X	In0
—	—	X	—	In1
—	X	—	—	In2
X	—	—	—	In3

DeviceIn Data This parameter provides status of network device inputs.	Parameter Number	2
	Access Rule	GET
	Data Type	WORD
	Group	Basic Status
	Units	—
	Minimum Value	0
	Maximum Value	65535
	Default Value	0

Bit																**Function**
15	**14**	**13**	**12**	**11**	**10**	**9**	**8**	**7**	**6**	**5**	**4**	**3**	**2**	**1**	**0**	
—	—	—	—	—	—	—	—	—	—	—	—	—	—	—	X	Pt00DeviceIn
—	—	—	—	—	—	—	—	—	—	—	—	—	—	X	—	Pt01DeviceIn
—	—	—	—	—	—	—	—	—	—	—	—	—	X	—	—	Pt02DeviceIn
—	—	—	—	—	—	—	—	—	—	—	—	X	—	—	—	Pt03DeviceIn
—	—	—	—	—	—	—	—	—	—	—	X	—	—	—	—	Pt04DeviceIn
—	—	—	—	—	—	—	—	—	—	X	—	—	—	—	—	Pt05DeviceIn
—	—	—	—	—	—	—	—	—	X	—	—	—	—	—	—	Pt06DeviceIn
—	—	—	—	—	—	—	—	X	—	—	—	—	—	—	—	Pt07DeviceIn
—	—	—	—	—	—	—	X	—	—	—	—	—	—	—	—	Pt08DeviceIn
—	—	—	—	—	—	X	—	—	—	—	—	—	—	—	—	Pt09DeviceIn
—	—	—	—	—	X	—	—	—	—	—	—	—	—	—	—	Pt10DeviceIn
—	—	—	—	X	—	—	—	—	—	—	—	—	—	—	—	Pt11DeviceIn
—	—	—	X	—	—	—	—	—	—	—	—	—	—	—	—	Pt12DeviceIn
—	—	X	—	—	—	—	—	—	—	—	—	—	—	—	—	Pt13DeviceIn
—	X	—	—	—	—	—	—	—	—	—	—	—	—	—	—	Pt14DeviceIn
X	—	—	—	—	—	—	—	—	—	—	—	—	—	—	—	Pt15DeviceIn

DeviceOut Data This parameter provides status of network device outputs.	Parameter Number	3
	Access Rule	GET
	Data Type	WORD
	Group	Basic Status
	Units	—
	Minimum Value	0
	Maximum Value	32767
	Default Value	0

Bit																Function
15	**14**	**13**	**12**	**11**	**10**	**9**	**8**	**7**	**6**	**5**	**4**	**3**	**2**	**1**	**0**	
—	—	—	—	—	—	—	—	—	—	—	—	—	—	—	X	Pt00DeviceOut
—	—	—	—	—	—	—	—	—	—	—	—	—	—	X	—	Pt01DeviceOut
—	—	—	—	—	—	—	—	—	—	—	—	—	X	—	—	Pt02DeviceOut
—	—	—	—	—	—	—	—	—	—	—	—	X	—	—	—	Pt03DeviceOut
—	—	—	—	—	—	—	—	—	—	—	X	—	—	—	—	Pt04DeviceOut
—	—	—	—	—	—	—	—	—	—	X	—	—	—	—	—	Pt05DeviceOut
—	—	—	—	—	—	—	—	—	X	—	—	—	—	—	—	Pt06DeviceOut
—	—	—	—	—	—	—	—	X	—	—	—	—	—	—	—	Pt07DeviceOut
—	—	—	—	—	—	—	X	—	—	—	—	—	—	—	—	Pt08DeviceOut
—	—	—	—	—	—	X	—	—	—	—	—	—	—	—	—	Pt09DeviceOut
—	—	—	—	—	X	—	—	—	—	—	—	—	—	—	—	Pt10DeviceOut
—	—	—	—	X	—	—	—	—	—	—	—	—	—	—	—	Pt11DeviceOut
—	—	—	X	—	—	—	—	—	—	—	—	—	—	—	—	Pt12DeviceOut
—	—	X	—	—	—	—	—	—	—	—	—	—	—	—	—	Pt13DeviceOut
—	X	—	—	—	—	—	—	—	—	—	—	—	—	—	—	Pt14DeviceOut
X	—	—	—	—	—	—	—	—	—	—	—	—	—	—	—	Reserved

Trip Status This parameter provides trip identification.	Parameter Number	4
	Access Rule	GET
	Data Type	WORD
	Group	Basic Status
	Units	—
	Minimum Value	0
	Maximum Value	65535
	Default Value	0

Bit																**Function**
15	**14**	**13**	**12**	**11**	**10**	**9**	**8**	**7**	**6**	**5**	**4**	**3**	**2**	**1**	**0**	
—	—	—	—	—	—	—	—	—	—	—	—	—	—	—	X	Short Circuit
—	—	—	—	—	—	—	—	—	—	—	—	—	—	X	—	Overload
—	—	—	—	—	—	—	—	—	—	—	—	—	X	—	—	Phase Short
—	—	—	—	—	—	—	—	—	—	—	—	X	—	—	—	Ground Fault
—	—	—	—	—	—	—	—	—	—	—	X	—	—	—	—	Stall
—	—	—	—	—	—	—	—	—	—	X	—	—	—	—	—	Control Power
—	—	—	—	—	—	—	—	—	X	—	—	—	—	—	—	I/O Fault
—	—	—	—	—	—	—	—	X	—	—	—	—	—	—	—	Over Temperature
—	—	—	—	—	—	—	X	—	—	—	—	—	—	—	—	Over Current
—	—	—	—	—	—	X	—	—	—	—	—	—	—	—	—	A3 Power Loss
—	—	—	—	—	X	—	—	—	—	—	—	—	—	—	—	Internal Comm ❶
—	—	—	—	X	—	—	—	—	—	—	—	—	—	—	—	DC Bus Fault
—	—	—	X	—	—	—	—	—	—	—	—	—	—	—	—	EEprom
—	—	X	—	—	—	—	—	—	—	—	—	—	—	—	—	HW Fault ❶
—	X	—	—	—	—	—	—	—	—	—	—	—	—	—	—	Restart Retries
X	—	—	—	—	—	—	—	—	—	—	—	—	—	—	—	Misc. Fault ❶

❶ See Parameter 61, Last PR Fault, for details.

Starter Status This parameter provides the status of the starter.	Parameter Number	5
	Access Rule	GET
	Data Type	WORD
	Group	Basic Status
	Units	—
	Minimum Value	0
	Maximum Value	65535
	Default Value	0

Bit																Function
15	14	13	12	11	10	9	8	7	6	5	4	3	2	1	0	
—	—	—	—	—	—	—	—	—	—	—	—	—	—	—	X	TripPresent
—	—	—	—	—	—	—	—	—	—	—	—	—	—	X	—	WarningPresent
—	—	—	—	—	—	—	—	—	—	—	—	—	X	—	—	RunningForward
—	—	—	—	—	—	—	—	—	—	—	—	X	—	—	—	RunningReverse
—	—	—	—	—	—	—	—	—	—	—	X	—	—	—	—	Ready
—	—	—	—	—	—	—	—	—	—	X	—	—	—	—	—	Net Ctl Status
—	—	—	—	—	—	—	—	—	X	—	—	—	—	—	—	Net Ref Status
—	—	—	—	—	—	—	—	X	—	—	—	—	—	—	—	At Reference
—	—	—	—	—	—	—	X	—	—	—	—	—	—	—	—	DrvOpto1
—	—	—	—	—	—	X	—	—	—	—	—	—	—	—	—	DrvOpto2
—	—	—	—	—	X	—	—	—	—	—	—	—	—	—	—	Keypad Jog
—	—	—	—	X	—	—	—	—	—	—	—	—	—	—	—	Keypad Hand
—	—	—	X	—	—	—	—	—	—	—	—	—	—	—	—	HOA Status
—	—	X	—	—	—	—	—	—	—	—	—	—	—	—	—	Disconnect Closed
—	X	—	—	—	—	—	—	—	—	—	—	—	—	—	—	Contactor 1 ❶
X	—	—	—	—	—	—	—	—	—	—	—	—	—	—	—	Contactor 2 ❷

❶ Refers to source brake contactor status
❷ Refers to output contactor status

InternalLinkStat This parameter provides status of the internal network connections.	Parameter Number	6
	Access Rule	GET
	Data Type	WORD
	Group	Basic Status
	Units	—
	Minimum Value	0
	Maximum Value	31
	Default Value	0

Bit																**Function:**
15	**14**	**13**	**12**	**11**	**10**	**9**	**8**	**7**	**6**	**5**	**4**	**3**	**2**	**1**	**0**	
—	—	—	—	—	—	—	—	—	—	—	—	—	—	—	X	Explicit Connection
—	—	—	—	—	—	—	—	—	—	—	—	—	—	X	—	I/O Connection
—	—	—	—	—	—	—	—	—	—	—	—	—	X	—	—	Explicit Fault
—	—	—	—	—	—	—	—	—	—	—	—	X	—	—	—	I/O Fault
—	—	—	—	—	—	—	—	—	—	—	X	—	—	—	—	I/O Idle
X	X	X	X	X	X	X	X	X	X	X	—	—	—	—	—	Reserved

Starter Command The parameter provides the status of the starter command.	Parameter Number	7
	Access Rule	GET
	Data Type	WORD
	Group	Basic Status
	Units	—
	Minimum Value	0
	Maximum Value	255
	Default Value	0

Bit								**Function:**
7	**6**	**5**	**4**	**3**	**2**	**1**	**0**	
—	—	—	—	—	—	—	X	Run Fwd
—	—	—	—	—	—	X	—	Run Rev
—	—	—	—	—	X	—	—	Fault Reset
—	—	—	—	X	—	—	—	Jog Fwd
—	—	—	X	—	—	—	—	Jog Rev
—	—	X	—	—	—	—	—	Reserved
—	X	—	—	—	—	—	—	OutA
X	—	—	—	—	—	—	—	OutB

Breaker Type This parameter identifies the Bulletin 140M used in this product. 0 = 140M-D8N-C10 1 = 140M-D8N-C25	Parameter Number	22
	Access Rule	GET
	Data Type	BOOL
	Group	Basic Status
	Units	—
	Minimum Value	0
	Maximum Value	1
	Default Value	—

Base Enclosure Indicates the ArmorStart Base unit enclosure rating. Bit 0 = IP67 Bits 1 . . . 15 = Reserved	Parameter Number	56
	Access Rule	GET
	Data Type	WORD
	Group	Basic Status
	Units	—
	Minimum Value	0
	Maximum Value	—
	Default Value	0

Base Options Indicates the options for the ArmorStart Base unit. Bit 0 = Output Fuse Bit 1 = Reserved Bit 2 = CP Fuse Detect Bits 3 . . . 7 = Reserved Bit 8 = 10A Base Bit 9 = 25A Base Bit 10 . . . 15 = Reserved	Parameter Number	57
	Access Rule	GET
	Data Type	WORD
	Group	Basic Status
	Units	—
	Minimum Value	0
	Maximum Value	—
	Default Value	0

Wiring Options Bit 0 = Conduit Bit 1 = Round Media Bits 2 . . . 15 = Reserved	Parameter Number	58
	Access Rule	GET
	Data Type	WORD
	Group	Basic Status
	Units	—
	Minimum Value	0
	Maximum Value	—
	Default Value	0

Starter Enclosure Bit 0 = IP67 Bits 1…15 = Reserved	Parameter Number	59
	Access Rule	GET
	Data Type	WORD
	Group	Basic Status
	Units	—
	Minimum Value	0
	Maximum Value	—
	Default Value	0

Starter Options Bit 0 = Full Keypad Bit 1 = Reserved Bit 2 = Source Brake Bit 3 = Reserved Bit 4 = Dynamic Brake Bit 5 = Output Contactor Bit 6 = EMI Filter Bit 7 = Reserved Bit 8 = Fused DynBrake Bit 9…15 = Reserved	Parameter Number	60
	Access Rule	GET
	Data Type	WORD
	Group	Basic Status
	Units	—
	Minimum Value	0
	Maximum Value	66535
	Default Value	0

Last PR Fault 1 = Hdw Short Ckt 2 = Reserved 3 = Motor Overload (PF Fault Code 7) 4 = Drive Overload (PF Fault Code 64) 5 = Phase U to Gnd (PF Fault Code 38) 6 = Phase V to Gnd (PF Fault Code 39) 7 = Phase W to Gnd (PF Fault Code 40) 8 = Phase UV Short (PF4 Fault Code 41) 9 = Phase UW Short (PF Fault Code 42) 10 = Phase VW Short (PF Fault Code 43) 11 = Ground Fault (PF Fault Code 13) 12 = Stall (PF Fault Code 6) 13 = Control Pwr Loss 14 = Control Pwr Fuse 15 = Input Short 16 = Output Fuse 17 = Over Temp 18 = Heatsink OvrTmp (PF Fault Code 8) 19 = HW OverCurrent (PF Fault Code 12) 20 = SW OverCurrent (PF Fault Code 63) 21 = A3 Power Loss 22 = Internal Comm 23 = Drive Comm Loss (PF Fault Code 81) 24 = Power Loss (PF Fault Code 3) 25 = Under Voltage (PF Fault Code 4) 26 = Over Voltage (PF Fault Code 5) 27 = MCB EEPROM 28 = Base EEPROM 29 = Drive EEPROM (PF Fault Code 100) 30 = Wrong Base 31 = Fan RPM 32 = Power Unit (PF Fault Code 70) 33 = Drive I/O Brd (PF Fault Code 122) 34 = Restart Retries (PF Fault Code 33) 35 = Drive Aux In Flt (PF Fault Code 2) 36 = Analog Input (PF Fault Code 29) 37 = Drv Param Reset (PF Fault Code 48) 38 = SCV Autotune (PF Fault Code 80) 39 = Source Brake 40 = Reserved 41 = DB1 Comm 42 = DB1 Fault 43 = DB Switch Short 45 = Incompatible Drive Firmware	Parameter Number	61
	Access Rule	GET
	Data Type	UINT
	Group	Basic Status
	Units	—
	Minimum Value	0
	Maximum Value	43
	Default Value	0

Warning Status This parameter warns the user of a condition, without faulting.	Parameter Number	62
	Access Rule	GET
	Data Type	WORD
	Group	Basic Status
	Units	—
	Minimum Value	0
	Maximum Value	65535
	Default Value	0

Bit																Warning ❶
15	14	13	12	11	10	9	8	7	6	5	4	3	2	1	0	
—	—	—	—	—	—	—	—	—	—	—	—	—	—	—	X	Reserved
—	—	—	—	—	—	—	—	—	—	—	—	—	—	X	—	Reserved
—	—	—	—	—	—	—	—	—	—	—	—	—	X	—	—	Phase Loss
—	—	—	—	—	—	—	—	—	—	—	—	X	—	—	—	Reserved
—	—	—	—	—	—	—	—	—	—	—	X	—	—	—	—	Reserved
—	—	—	—	—	—	—	—	—	—	X	—	—	—	—	—	Control Power
—	—	—	—	—	—	—	—	—	X	—	—	—	—	—	—	I/O Warning
—	—	—	—	—	—	—	—	X	—	—	—	—	—	—	—	Reserved
—	—	—	—	—	—	—	X	—	—	—	—	—	—	—	—	Phase Imbalance
—	—	—	—	—	—	X	—	—	—	—	—	—	—	—	—	A3 Power Loss
—	—	—	—	—	X	—	—	—	—	—	—	—	—	—	—	Reserved
—	—	—	—	X	—	—	—	—	—	—	—	—	—	—	—	Reserved
—	—	—	X	—	—	—	—	—	—	—	—	—	—	—	—	Reserved
—	—	X	—	—	—	—	—	—	—	—	—	—	—	—	—	Hardware
—	X	—	—	—	—	—	—	—	—	—	—	—	—	—	—	Reserved
X	—	—	—	—	—	—	—	—	—	—	—	—	—	—	—	Miscellaneous ❷

❶ The warning is triggered simultaneously, the fault is generated. If the fault is disabled a warning will still occur.
❷ Includes DB1 Thermal Warning

Base Trip The parameter provides the Base Module Trip Status.	Parameter Number	63
	Access Rule	GET
	Data Type	WORD
	Group	Basic Status
	Units	—
	Minimum Value	0
	Maximum Value	65535
	Default Value	0

Bit																Warning
15	**14**	**13**	**12**	**11**	**10**	**9**	**8**	**7**	**6**	**5**	**4**	**3**	**2**	**1**	**0**	
—	—	—	—	—	—	—	—	—	—	—	—	—	—	—	X	EEPROM Fault
—	—	—	—	—	—	—	—	—	—	—	—	—	—	X	—	Internal Comm
—	—	—	—	—	—	—	—	—	—	—	—	—	X	—	—	Hardware Fault
—	—	—	—	—	—	—	—	—	—	—	—	X	—	—	—	Control Module
X	X	X	X	X	X	X	X	X	X	X	X	—	—	—	—	Reserved

Produced Assembly Config Group

Int00DeviceOut Cfg This parameter is used to specify Int00DeviceOut of produced assembly 150 or 151.	Parameter Number	13
	Access Rule	GET/SET
	Data Type	USINT
	Group	Produced Assembly Config
	Units	—
	Minimum Value	0
	Maximum Value	263
	Default Value	1

Int01DeviceOut Cfg This parameter is used to specify Int01DeviceOut of produced assembly 150 or 151.	Parameter Number	14
	Access Rule	GET/SET
	Data Type	USINT
	Group	Produced Assembly Config
	Units	—
	Minimum Value	0
	Maximum Value	263
	Default Value	4

Int02DeviceOut Cfg This parameter is used to specify Int02DeviceOut of produced assembly 150 or 151.	Parameter Number	15
	Access Rule	GET/SET
	Data Type	USINT
	Group	Produced Assembly Config
	Units	—
	Minimum Value	0
	Maximum Value	263
	Default Value	5

Int03DeviceOut Cfg This parameter is used to specify Int03DeviceOut of produced assembly 150 or 151.	Parameter Number	16
	Access Rule	GET/SET
	Data Type	USINT
	Group	Produced Assembly Config
	Units	—
	Minimum Value	0
	Maximum Value	263
	Default Value	6

Starter Protection Group

Pr FltResetMode ❶ This parameter is the Protection Fault reset mode. 0 = Manual 1 = Automatic (Faults are cleared automatically when the fault condition is corrected.)	Parameter Number	23
	Access Rule	GET/SET
	Data Type	BOOL
	Group	Starter Protection
	Units	—
	Minimum Value	0
	Maximum Value	1
	Default Value	0

❶ When "Pr FltReset Mode" is set to 0=manual mode, and Parameter 192 (Auto Rstrt Tries) is set to allow the drive faults to auto-reset, the "Pr FltReset Mode" takes precedence. In this case, the ArmorStart will remain faulted until the fault is manually cleared.

Pr Fault Enable	Parameter Number	24
This parameter enables the Protection Fault by setting the bit to 1.	Access Rule	GET/SET
	Data Type	WORD
	Group	Starter Protection
	Units	—
	Minimum Value	64927
	Maximum Value	65535
	Default Value	64927

Bit																Function
15	14	13	12	11	10	9	8	7	6	5	4	3	2	1	0	
—	—	—	—	—	—	—	—	—	—	—	—	—	—	—	X	Short Circuit ❶
—	—	—	—	—	—	—	—	—	—	—	—	—	—	X	—	Overload ❶
—	—	—	—	—	—	—	—	—	—	—	—	—	X	—	—	Phase Loss ❶
—	—	—	—	—	—	—	—	—	—	—	—	X	—	—	—	Ground Fault ❶
—	—	—	—	—	—	—	—	—	—	—	X	—	—	—	—	Stall ❶
—	—	—	—	—	—	—	—	—	—	X	—	—	—	—	—	Control Power
—	—	—	—	—	—	—	—	—	X	—	—	—	—	—	—	I/O Fault
—	—	—	—	—	—	—	—	X	—	—	—	—	—	—	—	Over Temperature ❶
—	—	—	—	—	—	—	X	—	—	—	—	—	—	—	—	Over Current ❶
—	—	—	—	—	—	X	—	—	—	—	—	—	—	—	—	A3 Power Loss
—	—	—	—	—	X	—	—	—	—	—	—	—	—	—	—	Internal Comm ❶
—	—	—	—	X	—	—	—	—	—	—	—	—	—	—	—	DC Bus Fault ❶
—	—	—	X	—	—	—	—	—	—	—	—	—	—	—	—	EEprom ❶
—	—	X	—	—	—	—	—	—	—	—	—	—	—	—	—	HW Fault ❶
—	X	—	—	—	—	—	—	—	—	—	—	—	—	—	—	Restart Retries ❶
X	—	—	—	—	—	—	—	—	—	—	—	—	—	—	—	Misc. Fault ❶

❶ Cannot be disabled

Pr Fault Reset	Parameter Number	25
This parameter resets the Protection Fault on a transition of 0 > 1.	Access Rule	GET/SET
	Data Type	BOOL
	Group	Starter Protection
	Units	—
	Minimum Value	0
	Maximum Value	1
	Default Value	0

Str Net FltState	Parameter Number	26
This parameter along with Parameter 27 (Str Net FltValue), defines how the starter will respond when a fault occurs as determined by Parameter 27. 0 = Goto Fault Value 1 = Hold Last State Allows Starter to hold last state or go to FltValue on NetFaults.	Access Rule	GET/SET
	Data Type	BOOL
	Group	Starter Protection
	Units	—
	Minimum Value	0
	Maximum Value	1
	Default Value	0

Str Net FltValue	Parameter Number	27
This parameter determines how the starter will be commanded in the event of a fault. State the Starter will go to on a Net Flt if Parameter 26 (Str Net FltState) = 0 (Goto Fault Value). 0 = OFF 1 = ON	Access Rule	GET
	Data Type	BOOL
	Group	Starter Protection
	Units	—
	Minimum Value	0
	Maximum Value	1
	Default Value	0

Str Net IdlState	Parameter Number	28
This parameter along with Parameter 29 (Str Net IdlValue), defines how the starter will respond when a network is idle as determined by Parameter 29. 0 = Goto Idle Value 1 = Hold Last State	Access Rule	GET/SET
	Data Type	BOOL
	Group	Starter Protection
	Units	—
	Minimum Value	0
	Maximum Value	1
	Default Value	0

Str Net IdlValue	Parameter Number	29
This parameter determines the state that starter assumes when the network is idle and Parameter 28 (Str Net IdlState) is set to “0”. 0 = OFF 1 = ON	Access Rule	GET
	Data Type	BOOL
	Group	Starter Protection
	Units	—
	Minimum Value	0
	Maximum Value	1
	Default Value	0

User I/O Configuration Group

Anti-bounce On Delay This parameter allows the installer to program a time duration before being reported "ON" (Anti-bouce).	Parameter Number	30
	Access Rule	GET/SET
	Data Type	UINT
	Group	User I/O Config.
	Units	ms
	Minimum Value	0
	Maximum Value	65
	Default Value	0

Anti-bounce OFF Delay This parameter allows the installer to program a time duration before being reported "OFF" (Anti-bouce).	Parameter Number	31
	Access Rule	GET/SET
	Data Type	UINT
	Group	User I/O Config.
	Units	ms
	Minimum Value	0
	Maximum Value	65
	Default Value	0

In Sink/Source This parameter allows the installer to program the inputs to be sink or source. 0 = Sink 1 = Source	Parameter Number	32
	Access Rule	GET/SET
	Data Type	BOOL
	Group	User I/O Config.
	Units	—
	Minimum Value	0
	Maximum Value	1
	Default Value	0

OutA Pr FltState This parameter along with Parameter 34 (OutA Pr FltValue), defines how Output A will respond when a trip occurs. 0 = Goto PrFlt Value 1 = Ignore PrFlt When set to "1", Output A continues to operate as command via the network. When set to "0", Output A opens or closes as determined by the setting in Parameter 34.	Parameter Number	33
	Access Rule	GET/SET
	Data Type	BOOL
	Group	User I/O Config.
	Units	—
	Minimum Value	0
	Maximum Value	1
	Default Value	0

OutA Pr FltValue	Parameter Number	34
This parameter determines the state the Output A assumes when a trip occurs and Parameter 33 (OutA Pr FltState) is set to "0". 0 = Open 1 = Close	Access Rule	GET/SET
	Data Type	BOOL
	Group	User I/O Config.
	Units	—
	Minimum Value	0
	Maximum Value	1
	Default Value	0

OutA Net FltState	Parameter Number	35
This parameter along with Parameter 36 (OutA Net FltValue), defines how Output A will respond when a network fault occurs. 0 = Goto Net FltValue 1 = Hold Last State When set to "1", Output A will hold state before trip occurrence. When set to "0", Output A opens or closes as determined by the setting in Parameter 36.	Access Rule	GET/SET
	Data Type	BOOL
	Group	User I/O Config.
	Units	—
	Minimum Value	0
	Maximum Value	1
	Default Value	0

OutA Net FltValue	Parameter Number	36
This parameter determines the state that Output A assumes when a network fault occurs and Parameter 35 (OutA Net FltState) is set to "0". 0 = Open 1 = Close	Access Rule	GET/SET
	Data Type	BOOL
	Group	User I/O Config.
	Units	—
	Minimum Value	0
	Maximum Value	1
	Default Value	0

OutA Net IdlState	Parameter Number	37
This parameter along with Parameter 38 (OutA Net IdlValue), defines how Output A will respond when the network is idle. 0 = Goto Net IdlValue 1 = Hold Last State When set to "0", Output A opens or closes as determined by the setting in Parameter 38.	Access Rule	GET/SET
	Data Type	BOOL
	Group	User I/O Config.
	Units	—
	Minimum Value	0
	Maximum Value	1
	Default Value	0

OutA Net IdlValue This parameter determines the state that Output A assumes when the network is idle and Parameter 37 (OutA Net IdlState) is set to "0". 0 = Open 1 = Close	Parameter Number	38
	Access Rule	GET/SET
	Data Type	BOOL
	Group	User I/O Config.
	Units	—
	Minimum Value	0
	Maximum Value	1
	Default Value	0

OutB Pr FltState This parameter along with Parameter 40 (OutB Pr FltValue), defines how Output B will respond when a protection trip occurs. 0 = Goto PrFlt Value 1 = Ignore PrFlt When set to "1", Output B continues to operate as command via the network. When set to "0", Output B opens or closes as determined by setting in Parameter 40.	Parameter Number	39
	Access Rule	GET/SET
	Data Type	BOOL
	Group	User I/O Config.
	Units	—
	Minimum Value	0
	Maximum Value	1
	Default Value	0

OutB Pr FltValue This parameter determines the state the Out B assumes when a protection trip occurs and Parameter 39 (OutB Pr FltState) is set to "0". 0 = Open 1 = Close	Parameter Number	40
	Access Rule	GET/SET
	Data Type	BOOL
	Group	User I/O Config.
	Units	—
	Minimum Value	0
	Maximum Value	1
	Default Value	0

OutB Net FltState This parameter along with Parameter 42 (OutB Net FltValue), defines how Output B will respond when a network fault occurs. 0 = Goto Idle Value 1 = Hold Last State When set to "1", Output B will hold state before trip occurrence. When set to "0", Output B opens or closes as determined by setting in Parameter 42.	Parameter Number	41
	Access Rule	GET/SET
	Data Type	BOOL
	Group	User I/O Config.
	Units	—
	Minimum Value	0
	Maximum Value	1
	Default Value	0

OutB Net FltValue This parameter determines the state that Output B assumes when a network fault occurs and Parameter 41 (OutB Net FltState) is set to "0". 0 = Open 1 = Close	Parameter Number	42
	Access Rule	GET/SET
	Data Type	BOOL
	Group	User I/O Config.
	Units	—
	Minimum Value	0
	Maximum Value	1
	Default Value	0

OutB Net IdlState This parameter along with Parameter 44 (OutB Net IdlValue), defines how Output B will respond when the network is idle. 0 = Goto PrFlt Value 1 = Ignore PrFlt When set to "0", Output B opens or closes as determined by the setting in Parameter 44.	Parameter Number	43
	Access Rule	GET/SET
	Data Type	BOOL
	Group	User I/O Config.
	Units	—
	Minimum Value	0
	Maximum Value	1
	Default Value	0

OutB Net IdlValue This parameter determines the state that Output B assumes when the network is idle and Parameter 43 (OutB Net IdlState) is set to "0". 0 = Open 1 = Close	Parameter Number	44
	Access Rule	GET/SET
	Data Type	BOOL
	Group	User I/O Config.
	Units	—
	Minimum Value	0
	Maximum Value	1
	Default Value	0

Miscellaneous Configuration Group

Network Override This parameter allows for the local logic to override a Network fault. 0 = Disable 1 = Enable	Parameter Number	8
	Access Rule	GET/SET
	Data Type	BOOL
	Group	Misc. Config.
	Units	—
	Minimum Value	0
	Maximum Value	1
	Default Value	0

Comm Override	Parameter Number	9
This parameter allows for local logic to override the absence of an I/O connection. 0 = Disable 1 = Enable	Access Rule	GET/SET
	Data Type	BOOL
	Group	Misc. Config.
	Units	—
	Minimum Value	0
	Maximum Value	1
	Default Value	0

Keypad Mode	Parameter Number	45
This parameter selects if the keypad operation is maintained or momentary. 0 = Maintained 1 = Momentary	Access Rule	GET/SET
	Data Type	BOOL
	Group	Misc. Config.
	Units	—
	Minimum Value	0
	Maximum Value	1
	Default Value	0

Keypad Disable	Parameter Number	46
This parameter disables all keypad function except for the “OFF” and “RESET” buttons. 0 = Not Disabled 1 = Disabled	Access Rule	GET/SET
	Data Type	BOOL
	Group	Misc. Config.
	Units	—
	Minimum Value	0
	Maximum Value	1
	Default Value	0

Set to Defaults	Parameter Number	47
This parameter if set to “1” will set the device to the factory defaults (but will not cause the ArmorStart to reboot). 0 = No Operation 1 = Set to Defaults	Access Rule	GET/SET
	Data Type	BOOL
	Group	Misc. Config.
	Units	—
	Minimum Value	0
	Maximum Value	1
	Default Value	0

Drive I/O Configuration Group (Bulletin 284E only)

Drive Control This parameter provides the status of drive parameters.	Parameter Number	48
	Access Rule	GET
	Data Type	WORD
	Group	Drive I/O Config.
	Units	—
	Minimum Value	0
	Maximum Value	4095
	Default Value	0

Bit												Function
11	10	9	8	7	6	5	4	3	2	1	0	
—	—	—	—	—	—	—	—	—	—	—	X	Accel 1 En
—	—	—	—	—	—	—	—	—	—	X	—	Accel 2 En
—	—	—	—	—	—	—	—	—	X	—	—	Decel 1 En
—	—	—	—	—	—	—	—	X	—	—	—	Decel 2 En
—	—	—	—	—	—	—	X	—	—	—	—	Freq Sel 0
—	—	—	—	—	—	X	—	—	—	—	—	Freq Sel 1
—	—	—	—	—	X	—	—	—	—	—	—	Freq Sel 2
—	—	—	—	X	—	—	—	—	—	—	—	Reserved
—	—	—	X	—	—	—	—	—	—	—	—	Drv In 1
—	—	X	—	—	—	—	—	—	—	—	—	Drv In 2
—	X	—	—	—	—	—	—	—	—	—	—	Drv In 3
X	—	—	—	—	—	—	—	—	—	—	—	Drv In 4

DrvIn Pr FltState This parameter, along with Parameter 50 (DrvIn Pr FltValue),, defines how the Drive Digital Inputs 1…4 will respond when a protection trip occurs. When set to "1", Drive Digital Inputs 1…4 continue to operate as command via the network. When set to "0", Drive Digital Inputs 1…4 will open or close as determined by setting in Parameter 50. 0 = Go to PrFlt Value 1 = Ignore PrFlt	Parameter Number	49
	Access Rule	GET/SET
	Data Type	BOOL
	Group	Drive I/O Config.
	Units	—
	Minimum Value	0
	Maximum Value	1
	Default Value	0

DrvIn Pr FltValue	Parameter Number	50
This parameter determines the state of Drive Digital Inputs 1…4, assumes when a trip occurs and Parameter 49 (DrvIn Pr FltState) is set to "0". 0 = Open 1 = Close	Access Rule	GET/SET
	Data Type	BOOL
	Group	Drive I/O Config.
	Units	—
	Minimum Value	0
	Maximum Value	1
	Default Value	0

DrvIn Net FltState	Parameter Number	51
This parameter, along with Parameter 52 (DrvIn Net FltValue),, defines how the Drive Digital Inputs 1…4 will respond when a network fault occurs. When set to "1", Drive Digital Inputs 1…4 hold to last state occurs. When set to "0", will go to DrvIn Net FltValue as determined by Parameter 52. 0 = Go to Fault Value 1 = Hold Last State	Access Rule	GET/SET
	Data Type	BOOL
	Group	Drive I/O Config.
	Units	—
	Minimum Value	0
	Maximum Value	1
	Default Value	0

DrvIn Net FltValue	Parameter Number	52
This parameter determines the state of Drive Digital Inputs 1…4 when a network fault occurs and Parameter 51 (DrvIn Net FltState) is set to "0". 0 = OFF 1 = ON	Access Rule	GET/SET
	Data Type	BOOL
	Group	Drive I/O Config.
	Units	—
	Minimum Value	0
	Maximum Value	1
	Default Value	0

DrvIn Net IdlState	Parameter Number	53
This parameter, along with Parameter 54 (DrvIn Net IdlValue),, defines how the Drive Digital Inputs 1…4 will respond when a network is idle. When set to "1", hold to last state occurs. When set to "0", will go to DrvIn Net IdlState as determined by Parameter 54. 0 = Go to Fault Value 1 = Hold Last State	Access Rule	GET/SET
	Data Type	BOOL
	Group	Drive I/O Config.
	Units	—
	Minimum Value	0
	Maximum Value	1
	Default Value	0

DrvIn Net IdlValue This parameter determines the state that Drive Digital Inputs 1…4 assume when the network is idle and Parameter 53 (DrvIn Net IdlState) is set to "0". 0 = OFF 1 = ON	Parameter Number	54
	Access Rule	GET/SET
	Data Type	BOOL
	Group	Drive I/O Config.
	Units	—
	Minimum Value	0
	Maximum Value	1
	Default Value	0

Drive Display Group (Bulletin 284E only)

Output Freq Output frequency present at T1, T2, T3.	Parameter Number	101
	Related Parameters	102, 110, 134, 135, 138
	Access Rule	GET
	Data Type	UINT
	Group	Drive Display
	Units	0.1 Hz
	Minimum Value	0.0
	Maximum Value	400.0 Hz
	Default Value	Read Only

Commanded Freq Value of the active frequency command. Displays the commanded frequency even if the drive is not running.	Parameter Number	102
	Related Parameters	101, 113, 134, 135, 138
	Access Rule	GET
	Data Type	UINT
	Group	Drive Display
	Units	0.1 Hz
	Minimum Value	0.0
	Maximum Value	400.0 Hz
	Default Value	Read Only

Output Current Output Current present at T1, T2, T3.	Parameter Number	103
	Access Rule	GET
	Data Type	UINT
	Group	Drive Display
	Units	0.01
	Minimum Value	0.00
	Maximum Value	Drive rated amps x 2
	Default Value	Read Only

Output Voltage Output Voltage present at T1, T2, T3.	Parameter Number	104
	Related Parameters	131, 184, 188
	Access Rule	GET
	Data Type	UINT
	Group	Drive Display
	Units	1V AC
	Minimum Value	0
	Maximum Value	480V
	Default Value	Read Only

DC Bus Voltage Present DC Bus voltage level	Parameter Number	105
	Access Rule	GET
	Data Type	UINT
	Group	Drive Display
	Units	1V DC
	Minimum Value	Based on Drive Rating
	Maximum Value	
	Default Value	Read Only

Drive Status Present operating condition of the drive Bit 0 = Running Bit 1 = Forward Bit 2 = Accelerating Bit 3 = Decelerating	Parameter Number	106
	Related Parameter	195
	Access Rule	GET
	Data Type	Byte
	Group	Drive Display
	Units	—
	Minimum Value	0
	Maximum Value	1
	Default Value	Read Only

Fault 1 Code A code that represents the drive fault. The code appears in this parameter as the most recent fault that has occurred. (See Internal Drive Faults in Chapter 10 for more information).	Parameter Number	107
	Access Rule	GET
	Data Type	UINT
	Group	Drive Display
	Units	—
	Minimum Value	F2
	Maximum Value	F122
	Default Value	Read Only

Fault 2 Code A code that represents a drive fault. The code appears in this parameter as the second most recent fault that has occurred.	Parameter Number	108
	Access Rule	GET
	Data Type	UINT
	Group	Drive Display
	Units	—
	Minimum Value	F2
	Maximum Value	F122
	Default Value	Read Only

Fault 3 Code A code that represents a drive fault. The code appears in this parameter as the third most recent fault that has occurred.	Parameter Number	109
	Access Rule	GET
	Data Type	UINT
	Group	Drive Display
	Units	—
	Minimum Value	F2
	Maximum Value	F122
	Default Value	Read Only

Process Display The output frequency that is scaled by the process factor (Parameter 199).	Parameter Number	110
	Related Parameter	101. 199
	Access Rule	GET
	Data Type	UINT
	Group	Drive Display
	Units	—
	Minimum Value	0.00
	Maximum Value	9999
	Default Value	Read Only

Control Source Displays the source of the Start Command and Speed Reference. 1 = Internal Frequency 4 = Preset Freq x 5 = Network Control 9 = Jog Freq	Parameter Number	112
	Related Parameters	136, 138, 151…154 (Digital In x Sel) must be set to Option 4, 169, 170…177 (Preset Freq x), 240…247 (StpLogic x)
	Access Rule	GET
	Data Type	UINT
	Group	Drive Display
	Units	1
	Minimum Value	0
	Maximum Value	9
	Default Value	Read Only

Contrl In Status Status of control inputs. These can be used in DeviceLogix. Bit 0 = Start/Run FWD Input Bit 1 = Direction/Run REV Input Bit 2 = Stop Input Bit 3 = Dynamic Brake Transistor On	Parameter Number	113
	Related Parameter	102, 134, 135
	Access Rule	GET
	Data Type	UINT
	Group	Drive Display
	Units	1
	Minimum Value	0
	Maximum Value	1
	Default Value	Read Only

Dig In Status Status of the control terminal block digital inputs: Bit 0 = Digital In 1 Sel Bit 1 = Digital In 2 Sel Bit 2 = Digital In 3 Sel Bit 3 = Digital In 4 Sel	Parameter Number	114
	Related Parameter	151…154
	Access Rule	GET
	Data Type	UINT
	Group	Drive Display
	Units	1
	Minimum Value	0
	Maximum Value	1
	Default Value	Read Only

Comm Status Status of communications ports: Bit 0 = Receiving Data Bit 1 = Transmitting Data Bit 2 = Internal Communications Bit 3 = Communication Error	Parameter Number	115
	Related Parameter	205, 206
	Access Rule	GET
	Data Type	UINT
	Group	Drive Display
	Units	1
	Minimum Value	0
	Maximum Value	1
	Default Value	Read Only

Elapsed Run Time Accumulated time drive is outputting power. Time is displayed in 10 hour increments.	Parameter Number	118
	Access Rule	GET
	Data Type	UINT
	Group	Drive Display
	Units	1 = 10 hrs
	Minimum Value	0
	Maximum Value	9999
	Default Value	Read Only

Output Power The output power present at T1, T2, and T3.	Parameter Number	122
	Access Rule	GET
	Data Type	UINT
	Group	Drive Display
	Units	
	Minimum Value	0.00
	Maximum Value	Drive rated power X 2
	Default Value	Read Only

Output Power Fctr The angle in electrical degrees between motor voltage and current.	Parameter Number	123
	Access Rule	GET
	Data Type	UINT
	Group	Drive Display
	Units	0.1°
	Minimum Value	0.0°
	Maximum Value	180.0°
	Default Value	Read Only

Drive Temp Present operating temperature of the drive power section.	Parameter Number	124
	Access Rule	GET
	Data Type	UINT
	Group	Drive Display
	Units	1 °C
	Minimum Value	0
	Maximum Value	120
	Default Value	Read Only

Counter Status The current value of the counter when counter is enabled.	Parameter Number	125
	Access Rule	GET
	Data Type	UINT
	Group	Drive Display
	Units	1
	Minimum Value	0
	Maximum Value	9999
	Default Value	Read Only

Timer Status The current value of the timer when timer is enabled.	Parameter Number	126
	Access Rule	GET
	Data Type	UINT
	Group	Drive Display
	Units	0.1 sec
	Minimum Value	0
	Maximum Value	9999
	Default Value	Read Only

Torque Current The current value of the motor torque current.	Parameter Number	129
	Access Rule	GET
	Data Type	UINT
	Group	Drive Display
	Units	0.01
	Minimum Value	0.00
	Maximum Value	Drive Rated Amps x 2
	Default Value	Read Only

Drive Setup Group (Bulletin 284E only)

Motor NP Volts O Stop drive before changing this parameter. Set to the motor nameplate rated volts.	Parameter Number	131
	Related Parameters	104, 184, 185…187
	Access Rule	GET/SET
	Data Type	UINT
	Group	Drive Setup
	Units	1V AC
	Minimum Value	20
	Maximum Value	480V
	Default Value	Based on Drive Rating

Motor NP Hertz O Stop drive before changing this parameter. Set to the motor nameplate rated frequency.	Parameter Number	132
	Related Parameters	184, 185…187, and 190
	Access Rule	GET/SET
	Data Type	UINT
	Group	Drive Setup
	Units	1 Hz
	Minimum Value	15
	Maximum Value	400
	Default Value	60 Hz

Motor OL Current Set to the maximum allowable current. The drive fault on an F7 Motor Over load if the value of this parameter is exceeded by 150% for 60 s.	Parameter Number	133
	Related Parameter	155, 189, 190, 198, 214, 218, 260…261
	Access Rule	GET/SET
	Data Type	UINT
	Group	Drive Setup
	Units	0.1 A
	Minimum Value	0.0
	Maximum Value	Drive rated amps x 2
	Default Value	Based on Drive Rating

Minimum Freq Sets the lowest frequency that the drive will output continuously.	Parameter Number	134
	Related Parameter	101, 102, 113, 135, 185…187, 260, 261
	Access Rule	GET/SET
	Data Type	UINT
	Group	Drive Setup
	Units	0.1 Hz
	Minimum Value	0.0
	Maximum Value	400
	Default Value	0.0

Maximum Freq O Stop drive before changing this parameter. Sets the highest frequency that the drive will output continuously.	Parameter Number	135
	Related Parameter	101, 102, 113, 134, 135, 178, 185…187
	Access Rule	GET/SET
	Data Type	UINT
	Group	Drive Setup
	Units	0.1 Hz
	Minimum Value	0.0
	Maximum Value	400
	Default Value	60.0

Stop Mode		
Valid Stop Mode for the Bulletin 284E ArmorStart are the following: 0 = **Ramp, CF** Ramp to Stop. **Stop** command clears active fault. 1 = **Coast, CF** Coast to Stop. **Stop** command clears active fault. 2 = **DC Brake,CF** DC Injection Braking Stop. **Stop** command clears active fault. 3 = **DCBrkAuto, CF** DC injection Braking with Auto Shutoff. Standard DC Injection Braking for value set in Parameter 180 (DC Brake Time) or Drive shuts off if the drive detects that the motor is stopped. **Stop** command clears active fault. 4 = **Ramp,** Ramp to Stop 5 = **Coast,** Coast to Stop 6 = **DC Brake,** DC Injection Braking Stop 7 = **DC BrakeAuto,** DC Injection Stop with Auto Shutoff Standard DC Injection Braking for value set in Parameter 180 (DC Brake Time) or Drive shuts off if current limit is exceeded. 8 = **Ramp** + **EM B, CF** Ramp to Stop with EM Brake Control. **Stop** command clears active fault. ❶ 9 = **Ramp** + **EM Brk** Ramp to Stop with EM Brake Control. ❶	Parameter Number	137
	Related Parameters	136, 180…182, 205, 260, 261 ❶
	Access Rule	GET/SET
	Data Type	UINT
	Group	Drive Setup
	Units	—
	Minimum Value	0
	Maximum Value	9
	Default Value	9

❶ See Parameter 155 to set the EM brake actuation condition.

Speed Reference		
Valid Speed References for the Bulletin 284E ArmorStart are the following: 1 = Internal Freq 4 = Preset Freq 5 = Comm Port 9 = Jog Freq	Parameter Number	138
	Related Parameters	101, 102, 112, 139, 140, 151…154, 169, 170…177, 232, 240…247, and 250…257
	Access Rule	GET/SET
	Data Type	UINT
	Group	Drive Setup
	Units	—
	Minimum Value	0
	Maximum Value	7
	Default Value	5

Accel Time 1		
Sets the rate of acceleration for all speed increases. $\frac{\text{Maximum Freq}}{\text{Accel Time}} = \text{Accel Rate}$	Parameter Number	139
	Related Parameters	138, 140, 151…154, 167, 170…177, and 240…247
	Access Rule	GET/SET
	Data Type	UINT
	Group	Drive Setup
	Units	0.1 sec
	Minimum Value	0.0 sec
	Maximum Value	600.0 sec
	Default Value	10.0 sec

Decel Time 1	Parameter Number	140
Sets the rate of deceleration for all speed decreases. $\frac{\text{Maximum Freq}}{\text{Decel Time}} = \text{Decel Rate}$	Related Parameters	138, 139, 151…154, 168, 170…177, and 240…247
	Access Rule	GET/SET
	Data Type	UINT
	Group	Drive Setup
	Units	0.1 sec
	Minimum Value	0.1 sec
	Maximum Value	600.0 sec
	Default Value	10.0 sec

Reset To Defaults	Parameter Number	141
O Stop drive before changing this parameter. Resets all parameter values to factory defaults. 0 = Ready/Idle (Default) 1 = Factory Rset	Access Rule	GET/SET
	Data Type	BOOL
	Group	Drive Setup
	Units	—
	Minimum Value	0
	Maximum Value	1
	Default Value	0

Motor OL Ret	Parameter Number	143
Enables/disables the Motor overload Retention function. When Enabled, the value that is held in the motor overload counter is saved at power-down and restored at power-up. A change to this parameter setting resets the counter. 0 = Disabled (Default) 1 = Enabled	Access Rule	GET/SET
	Data Type	BOOL
	Group	Drive Setup
	Units	—
	Minimum Value	0
	Maximum Value	1
	Default Value	0

Drive Advanced Setup Group (Bulletin 284E only)

Digital In 1 SEL (151) **Digital In 2 SEL (152)** **Digital In 3 SEL (153)** **Digital In 4 SEL (154)** O Stop drive before changing this parameter. Selects the function for the digital inputs.	Parameter Number	151…154
	Related Parameters	112, 114, 138…140, 167, 168, 170…179, 240…247
	Access Rule	GET/SET
	Data Type	UINT
	Group	Drive Advanced Setup
	Units	See Table 24 for details.
	Minimum Value	
	Maximum Value	
	Default Value	

Table 24 - Digital Input Options

Option	Name	Description
1	Acc2 & Dec2	• When active, Parameter 167 (Accel Time 2) and Parameter 168 (Decel Time 2) are used for all ramp rates except Jog. • Can only be tied to one input.
2	Jog	• When input is present, drive accelerates according to the value set in Parameter 179 (Jog Accel/Decel) and ramps to the value set in Parameter 178 (Jog Frequency). • When the input is removed, drive ramps to a stop according to the value set in Parameter 179 (Jog Accel/Decel). • A valid Start command will override this input.
4	Preset Freq (Parameters 151 and 152 Default)	See Parameters 170…173 and 174…177.
6	Comm Port	This option is the default setting.
7	Clear Fault	When active, clears active fault.
8	RampStop,CF	Causes drive to immediately ramp to stop regardless of how Parameter 137 (Stop Mode) is set.
9	CoastStop,CF	Causes drive to immediately ramp to stop regardless of how Parameter 137 (Stop Mode) is set.
10	DCInjStop,CF	Causes drive to immediately begin a DC Injection stop regardless of how Parameter 137 (Stop Mode) is set.
11	Jog Forward (Parameter 154 Default)	Drive accelerates to Parameter 178 (Jog Frequency) according to Parameter 179 (Jog Accel/Decel) and ramps to stop when input becomes inactive. A valid start will override this command.
12	Jog Reverse	Drive accelerates to Parameter 178 (Jog Frequency) according to Parameter 179 (Jog Accel/Decel) and ramps to stop when input becomes inactive. A valid start will override this command.
16	MOP Up	Increases the value of Parameter 169 (Internal Freq) at a rate 2 Hz per second. Default of Parameter 169 is 60 Hz.
17	MOP Down	Decreases the value of Parameter 169 (Internal Freq) at a rate 2 Hz per second. Default of Parameter 169 is 60 Hz.
27 ❶	Em Brk Rls	If EM Brake function enabled, this input releases the brake. See parameter 155 and set to EM Brk Cntrol (22).

❶ Provides programmable control of Em Brk via digital input (1...4)

Relay Out Sel Sets the condition that changes the state of the output relay contacts.	Parameter Number	155
	Related Parameters	133, 156, 192, 240…247, 250…257, 260, 261
	Access Rule	GET/SET
	Data Type	UINT
	Group	Drive Advanced Setup
	Units	—
	Minimum Value	0
	Maximum Value	22
	Default Value	22

Table 25 - Options for the Output Relay Contacts

Options	Name	Description
0	Ready/Fault (Default)	Relay changes state when power is applied. This indicates that the drive is ready for operation. Relay returns drive to shelf state when power is removed or a fault occurs.
1	At Frequency	Drive reached commanded frequency.
6	Above Freq	Drive exceeds the frequency (Hz) value set in Parameter 156 (Relay Out Level) Use Parameter 156 to set threshold.
7	Above Cur	Drive exceeds the current (% Amps) value set in Parameter 156 (Relay Out Level) Use Parameter 156 to set threshold.
20	ParamControl	Enables the output to be controlled over the network communications by writing to Parameter 156 (Relay Out Level) (0 = OFF, 1 = ON).
22	EM Brk Cntrl	EM Brake is energized. Program Parameter 260 (EM Brk OFF Delay) and Parameter 261 (EM Brk On Delay) for desired action. ❶

❶ The customer is responsible to make sure the brake release function operates properly and safely.

Relay Out Level

Sets the trip point for the digital output relay if the value of Parameter 155 (Relay Out Sel) is 6, 7, 8, 10, 16, 17, 18, or 20.

Parameters 155 Setting	Parameter 156 Min./Max.
6	0/400 Hz
7	0/180%
8	0/815V
10	0/100%
16	0.1/9999 sec
17	1/9999 counts
18	1/180°
20	0/1

Parameter Number	156
Related Parameters	155
Access Rule	GET/SET
Data Type	UINT
Group	Drive Advanced Setup
Units	0.1
Minimum Value	0.0
Maximum Value	9999
Default Value	0.0

Accel Time 2

When active, sets the rate of acceleration for all speed increases except for jog.

$$\frac{\text{Maximum Freq}}{\text{Accel Time}} = \text{Accel Rate}$$

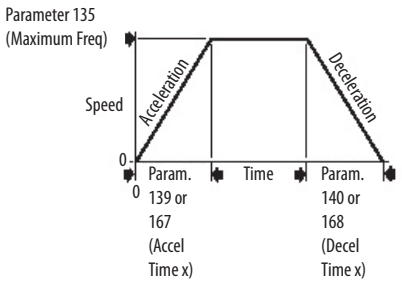

Parameter Number	167
Related Parameters	139, 151…154, 170…177, 240…247
Access Rule	GET/SET
Data Type	UINT
Group	Drive Advanced Setup
Units	0.1 sec
Minimum Value	0.0
Maximum Value	600.0
Default Value	20.0

Decel Time 2

When active, sets the rate of deceleration for all speed decreases except for jog.

$$\frac{\text{Maximum Freq}}{\text{Decel Time}} = \text{Decel Rate}$$

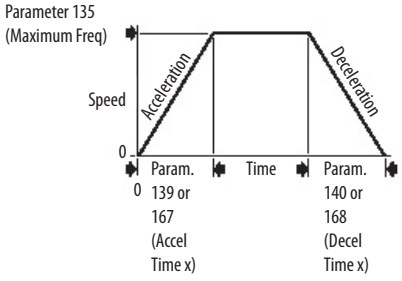

Parameter Number	168
Related Parameters	140, 151…154, 170…177, 240…247
Access Rule	GET/SET
Data Type	UINT
Group	Drive Advanced Setup
Units	0.1 sec
Minimum Value	0.0
Maximum Value	600.0
Default Value	20.0

Internal Freq

Provide the frequency command to drive when Parameter 138 (Speed Reference) is set to "1" (Internal Freq). When enabled, this parameter will change the frequency command in real time.

Parameter Number	169
Related Parameters	138
Access Rule	GET/SET
Data Type	UINT
Group	Drive Advanced Setup
Units	0.1 Hz
Minimum Value	0.0
Maximum Value	400.0
Default Value	60.0

170 (Preset Freq 0) **171 (Preset Freq 1)** **172 (Preset Freq 2)** **173 (Preset Freq 3)** **174 (Preset Freq 4)** **175 (Preset Freq 5)** **176 (Preset Freq 6)** **177 (Preset Freq 7)** Provides a fixed frequency command value when Parameters 151...154 (Digital In x Sel) is set to Option 4 (Preset Frequencies).	Parameter Number	170…173, 174…177
	Related Parameters	138…140, 151…154, 167, 168, 240…247, 250…257
	Access Rule	GET/SET
	Data Type	UINT
	Group	Drive Advanced Setup
	Units	0.1 Hz
	Minimum Value	0.0
	Maximum Value	400.0
	Default Value	See Table 26

Table 26 - Parameters 170…177 Preset Freq Options

	170 Default	0.0 Hz
	171 Default	5.0 Hz
	172 Default	10.0 Hz
	173 Default	20.0 Hz
	174 Default	30.0 Hz
	175 Default	40.0 Hz
	176 Default	50.0 Hz
	177 Default	60.0 Hz
	Min./Max.	0.0/400.0 Hz
	Display	0.1 Hz

Input State of Digital In 1 (I/O Terminal 05 when Parameter 151 = 4)	Input State of Digital In 2 (I/O Terminal 06 when Parameter 152 = 4)	Input State of Digital In 3 (I/O Terminal 07 when Parameter 153 = 4)	Frequency Source	Accel/Decel Parameter Used ❶
0	0	0	170 (Preset Freq 0)	(Accel Time 1)/(Decel Time 1)
1	0	0	171 (Preset Freq 1)	(Accel Time 1)/(Decel Time 1)
0	1	0	172 (Preset Freq 2)	(Accel Time 2)/(Decel Time 2)
1	1	0	173 (Preset Freq 3)	(Accel Time 2)/(Decel Time 2)
0	0	1	174 (Preset Freq 4)	(Accel Time 3)/(Decel Time 3)
Input State of Digital In 1 (I/O Terminal 05 when Parameter 151 = 4)	**Input State of Digital In 2 (I/O Terminal 06 when Parameter 152 = 4)**	**Input State of Digital In 3 (I/O Terminal 07 when Parameter 153 = 4)**	**Frequency Source**	**Accel/Decel Parameter Used ❷**
1	0	1	175 (Preset Freq 5)	(Accel Time 3)/(Decel Time 3)
0	1	1	176 (Preset Freq 6)	(Accel Time 4)/(Decel Time 4)
1	1	1	177 (Preset Freq 7)	(Accel Time 4)/(Decel Time 4)

❶ When a Digital Input is set to "Accel 2 & Decel 2", and the input is active, that input overrides the settings in this table.

Jog Frequency Sets the output frequency when the jog command is issued.	Parameter Number	178
	Related Parameters	135, 151…154, 179
	Access Rule	GET/SET
	Data Type	UINT
	Group	Drive Advanced Setup
	Units	0.1 Hz
	Minimum Value	0.0
	Maximum Value	400.0
	Default Value	10.0

Jog Accel/Decel Sets the acceleration and deceleration time when a jog command is issued.	Parameter Number	179
	Related Parameters	151…154, 178
	Access Rule	GET/SET
	Data Type	UINT
	Group	Drive Advanced Setup
	Units	0.1 sec
	Minimum Value	0.1
	Maximum Value	600.0
	Default Value	10.0

DC Brake Time Sets the length of time that DC brake current is injected into the motor. See Parameter 181 (DC Brake Level).	Parameter Number	180
	Related Parameters	137, 181
	Access Rule	GET/SET
	Data Type	UINT
	Group	Drive Advanced Setup
	Units	0.1 sec
	Minimum Value	0.0
	Maximum Value	99.9 (Setting of 99.9 = Continuous)
	Default Value	0.0

DC Brake Level Defines the maximum DC brake current, in amps, applied to the motor when Parameter 137 (Stop Mode) is set to either "Ramp" or "DC Brake".	Parameter Number	181
	Related Parameters	137, 180
	Access Rule	GET/SET
	Data Type	UINT
	Group	Drive Advanced Setup
	Units	0.1 A
	Minimum Value	0.0
	Maximum Value	Drive rated amps X 1.8
	Default Value	Drive rated amps X 0.05

ATTENTION:

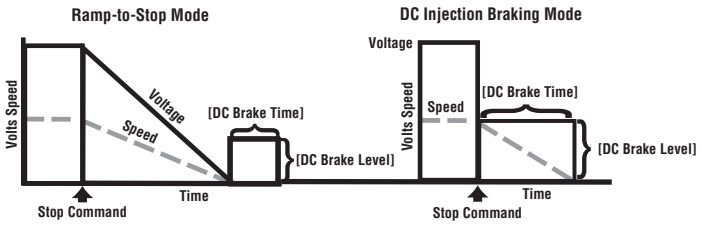

- If a hazard of injury due to movement of equipment or material exists, an auxiliary mechanical braking device must be used.
- This feature should not be used with synchronous or permanent magnet motors. Motors may be demagnetized during braking.

DB Resistor Sel

Stop drive before changing this parameter.
Enables/disables external dynamic braking.

Setting	Min./Max.
0	Disabled
1	Normal RA Res (5% Duty Cycle)
2	No Protection (100% Duty Cycle)
3…99	x% Duty Cycle Limited (3…99% of Duty Cycle)

Parameter Number	182
Related Parameters	137
Access Rule	GET/SET
Data Type	UINT
Group	Drive Advanced Setup
Units	1
Minimum Value	0
Maximum Value	99
Default Value	0

S Curve %

Sets the percentage of acceleration or deceleration time that is applied to ramp as S Curve. Time is added, half at the beginning and half at the end of the ramp.

Parameter Number	183
Access Rule	GET/SET
Data Type	UINT
Group	Drive Advanced Setup
Units	1%
Minimum Value	0
Maximum Value	100
Default Value	0% disabled

Figure 76 - S Curve

Example:
Accel Time = 10 Seconds
S Curve Setting = 50%
S Curve Time = 10 x 0.5 = 5 Seconds
Total Time = 10 + 5 = 15 Seconds

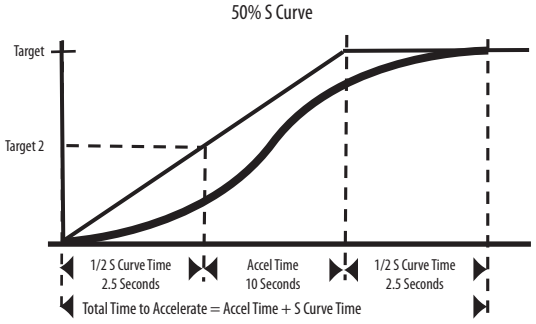

Boost Select		
Sets the boost voltage (% of Parameter 131 (Motor NP Volts)) and redefines the Volts per Hz curve. Active when Parameter 225 (Torque Perf Mode) = 0 (V/Hz). Drive may add additional voltage unless Option 5 is selected. See Table 27 for details.	Parameter Number	184
	Related Parameters	104, 131, 132, 185…187, 225
	Access Rule	GET/SET
	Data Type	UINT
	Group	Drive Advanced Setup
	Units	—
	Minimum Value	0
	Maximum Value	14
	Default Value	8

Table 27 - Boost Select Options

Options	Description	
0	Custom V/Hz	Variable Torque (Typical fan/pump curves)
1	30.0, VT	
2	35.0, VT	
3	40.0, VT	
4	45.0, VT	
5	0.0 no IR	Constant Torque
6	0.0	
7	2.5, CT (default for 5 Hp/4.0 kW Drive)	
8	5.0, CT (default)	
9	7.5, CT	
10	10.0, CT	
11	12.5, CT	
12	15.0, CT	
13	17.5, CT	
14	20.0, CT	

❶To activate 170 (Preset Freq 0) set 138 (Speed Reference) to "4" (Preset Freq).
❷When a Digital Input is set to "Accel 2 & Decel 2", and the input is active, that input overrides the settings in this table.

Figure 77 - Boost Select

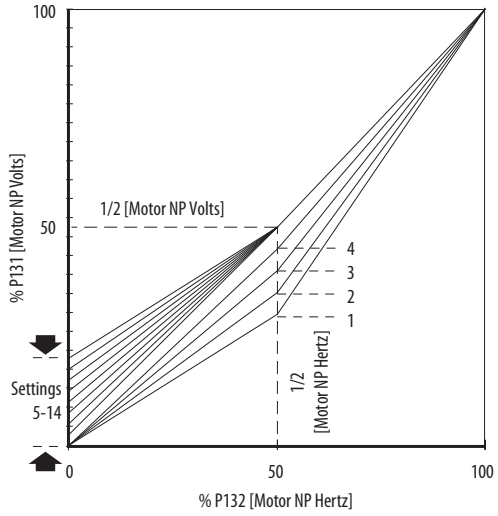

Start Boost	Parameter Number	185
Sets the boost voltage (% of Parameter 131 (Motor NP Volts)) and redefines the Volts per Hz curve when Parameter 184 (Boost Select) = 0 (Custom V/Hz) and Parameter 225 (Torque Perf Mode) = 0 (V/Hz)	Related Parameters	131, 132, 134, 135, 184, 186…188, 225
	Access Rule	GET/SET
	Data Type	UINT
	Group	Drive Advanced Setup
	Units	1.1%
	Minimum Value	0.0%
	Maximum Value	25.0%
	Default Value	2.5%

Figure 78 - Start Boost

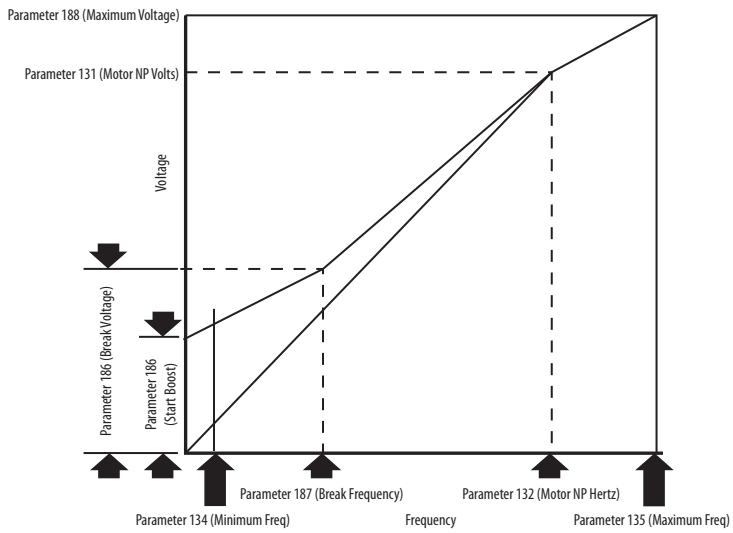

Brake Voltage	Parameter Number	186
Sets the frequency where brake voltage is applied when Parameter 184 (Boost Select) = 0 (Custom V/Hz) and Parameter 225 (Torque Perf Mode) = 0 (V/Hz).	Related Parameters	131, 132, 134, 135, 184, 185, 187, 188, 225
	Access Rule	GET/SET
	Data Type	UINT
	Group	Drive Advanced Setup
	Units	1.1%
	Minimum Value	0.0%
	Maximum Value	100.0%
	Default Value	25.0%

Brake Frequency	Parameter Number	187
Sets the frequency where brake frequency is applied when Parameter 184 (Boost Select) = 0 (Custom V/Hz) and Parameter 225 (Torque Perf Mode) = 0 (V/Hz).	Related Parameters	131, 132, 134, 135, 184, 185, 186, 188, 225
	Access Rule	GET/SET
	Data Type	UINT
	Group	Drive Advanced Setup
	Units	0.1 Hz
	Minimum Value	0.0 Hz
	Maximum Value	400.0 Hz
	Default Value	15.0 Hz

Maximum Voltage	Parameter Number	188
Sets the highest voltage that the drive will output.	Related Parameters	104, 185, 186, 187
	Access Rule	GET/SET
	Data Type	UINT
	Group	Drive Advanced Setup
	Units	1V AC
	Minimum Value	20V AC
	Maximum Value	Drive Rated Volts
	Default Value	Drive Rated Volts

Current Limit 1	Parameter Number	189
Maximum output current that is allowed before current limiting occurs	Related Parameters	133, 218
	Access Rule	GET/SET
	Data Type	UINT
	Group	Drive Advanced Setup
	Units	0.1 A
	Minimum Value	0.1 A
	Maximum Value	Drive rated amps X 1.8
	Default Value	Drive rated amps X 1.5

Motor OL Select	Parameter Number	190
Drive provides Class 10 motor overload protection. Settings 0…2, select the derating factor for I^2t overload function. 0 = No Derate 1 = Min. Derate 2 = Max. Derate	Related Parameters	132, 133
	Access Rule	GET/SET
	Data Type	UINT
	Group	Drive Advanced Setup
	Units	1
	Minimum Value	0
	Maximum Value	2
	Default Value	0

Figure 79 - Overload Trip Curves

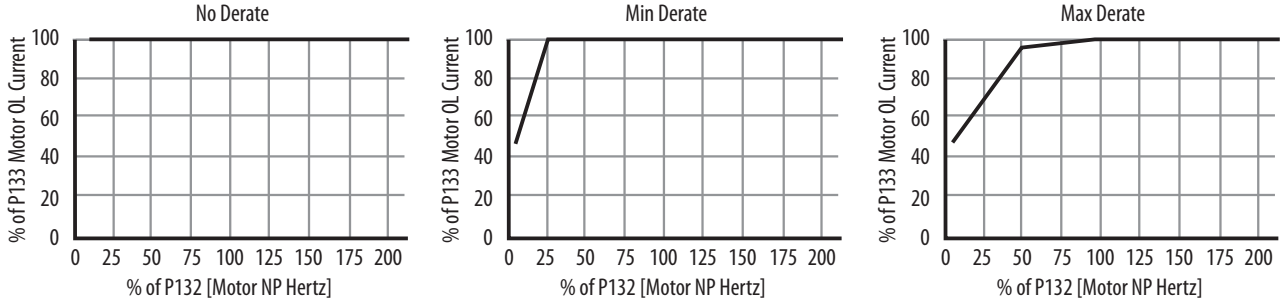

PWM Frequency Sets the carrier frequency for the PWM output waveform. The Figure 80 provides derating guidelines that are based on the PWM frequency setting.	Parameter Number	191
	Related Parameters	224
	Access Rule	GET/SET
	Data Type	UINT
	Group	Drive Advanced Setup
	Units	0.l Hz
	Minimum Value	2.0 Hz
	Maximum Value	16.0 Hz
	Default Value	4.0 Hz

Figure 80 - Derating Guidelines that are Based on the PWM Frequency Setting

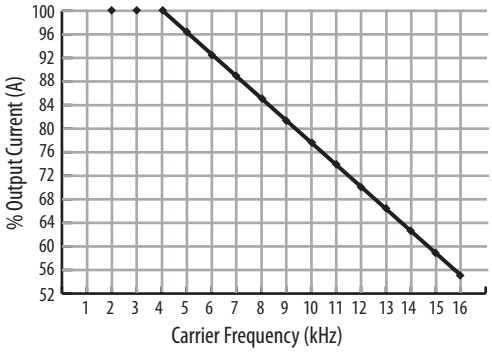

Auto Rstrt Tries Set the maximum number of times the drive attempts to reset a fault and restart.	Parameter Number	192
	Related Parameter	155, 193
	Access Rule	GET/SET
	Data Type	UINT
	Group	Drive Advanced Setup
	Units	1
	Minimum Value	0
	Maximum Value	9
	Default Value	0

Clear a Type 1 Fault and Restart the Drive

1. Set Parameter 192 (Auto Rstrt Tries) to a value other than 0.
2. Set Parameter 193 (Auto Rstrt Delay) to a value other than 0.

Clear an Overvoltage, Undervoltage, or Heatsink OvrTmp Fault without Restarting the Drive

1. Set Parameter 192 (Auto Rstrt Tries) to a value other than 0.
2. Set Parameter 193 (Auto Rstrt Delay) to 0.

ATTENTION: Equipment damage and/or personal injury may result if this parameter is used in an inappropriate application. Do not use this function without considering applicable local, national, and international codes, standards, regulations, or industry guidelines.

Auto Rstrt Delay Sets time between restart attempts when Parameter 192 (Auto Rstrt Tries) is set to a value other than zero.		
	Parameter Number	193
	Related Parameters	192
	Access Rule	GET/SET
	Data Type	UINT
	Group	Drive Advanced Setup
	Units	0.1 sec
	Minimum Value	0.0
	Maximum Value	300.0 sec
	Default Value	1.0 sec

Start at PowerUp Stop drive before changing this parameter. Enables/disables a feature that allows a Start or Run command to automatically cause the drive to resume running at command speed after the drive input is restored. Requires a digital input configured Run or Start and a valid start contact. 0 = Disabled 1 = Enabled		
	Parameter Number	194
	Related Parameters	192
	Access Rule	GET/SET
	Data Type	UINT
	Group	Drive Advanced Setup
	Units	—
	Minimum Value	0
	Maximum Value	1
	Default Value	0

ATTENTION: Equipment damage and/or personal injury may result if this parameter is used in an inappropriate application. Do not use this function without considering applicable local, national, and international codes, standards, regulations, or industry guidelines.

Reverse Disable	Parameter Number	195
Stop drive before changing this parameter. Enables/disables the function that allows the direction of the motor rotation to be changed. The reverse command may come from a digital command or serial command. All reverse inputs including two-wire Run Reverse will be ignored with reverse disabled. 0 = Disabled 1 = Enabled	Related Parameters	106
	Access Rule	GET/SET
	Data Type	UINT
	Group	Drive Advanced Setup
	Units	—
	Minimum Value	0
	Maximum Value	1
	Default Value	0

Flying Start En	Parameter Number	196
Sets the condition that allows the drive to reconnect to a spinning motor at actual RPM. 0 = Disabled 1 = Enabled	Access Rule	GET/SET
	Data Type	UINT
	Group	Drive Advanced Setup
	Units	—
	Minimum Value	0
	Maximum Value	1
	Default Value	0

Compensation	Parameter Number	197
Enables/disables correction options that may improve problems with motor instability, 0 = Disabled 1 = Electrical (Default) Some drive/motor combinations have inherent instabilities that are exhibited as non-sinusoidal motor currents. This setting attempts to correct this condition 2 = Mechanical Some motor/load combinations have mechanical resonances that can be excited by the drive current regulator. This setting slows down the current regulator response and attempts to correct this condition. 3 = Both	Access Rule	GET/SET
	Data Type	UINT
	Group	Drive Advanced Setup
	Units	—
	Minimum Value	0
	Maximum Value	3
	Default Value	1

SW Current Trip Enables/disables a software instantaneous (within 100 ms) current trip.	Parameter Number	198
	Related Parameters	133
	Access Rule	GET/SET
	Data Type	UINT
	Group	Drive Advanced Setup
	Units	0.1 A
	Minimum Value	0.0
	Maximum Value	Drive rated amps x 2
	Default Value	0.0 (Disabled)

Process Factor Scales the output frequency value that is displayed by Parameter 110 (Process Display). Output Freq x Process Factor = Process Display	Parameter Number	199
	Related Parameters	110
	Access Rule	GET/SET
	Data Type	UINT
	Group	Drive Advanced Setup
	Units	0.1
	Minimum Value	0.1
	Maximum Value	999.9
	Default Value	30.0

Fault Clear Stop drive before changing this parameter. Resets a fault and clears the fault queue. Used primarily to clear a fault over network communications. 0 = Ready/Idle (Default) 1 = Reset Fault 2 = Clear Buffer (Parameters 107 . . . 109 (Fault x Code))	Parameter Number	200
	Access Rule	GET/SET
	Data Type	UINT
	Group	Drive Advanced Setup
	Units	—
	Minimum Value	0
	Maximum Value	2
	Default Value	0

Program Lock Protects parameters against change by unauthorized personnel. 0 = Unlocked 1 = Locked	Parameter Number	201
	Access Rule	GET/SET
	Data Type	UINT
	Group	Drive Advanced Setup
	Units	—
	Minimum Value	0
	Maximum Value	1
	Default Value	0

Comm Loss Action		
Selects the drive's response to a loss of the communication connection or excessive communication errors. 0 = Fault (Default) Drive will fault on an F81 Comm Loss and coast to stop 1 = Coast Stop Stops drive via coast to stop 2 = Stop Stops via Parameter 137 (Stop Mode) setting 3 = Continue Last Drive continues operating at communication commanded speed that is saved in RAM.	Parameter Number	205
	Related Parameters	115, 137, 206
	Access Rule	GET/SET
	Data Type	UINT
	Group	Advanced Program Group
	Units	—
	Minimum Value	0
	Maximum Value	3
	Default Value	0

Comm Loss Time		
Sets the time that the drive remains in communication loss before implanting the option selected in Parameter 205 (Comm Loss Action).	Parameter Number	206
	Related Parameters	115, 205
	Access Rule	GET/SET
	Data Type	UINT
	Group	Advanced Program Group
	Units	0.1 sec
	Minimum Value	0.1 sec
	Maximum Value	60.0 sec
	Default Value	15.0 sec

Slip Hertz @ FLA		
Compensates for the inherent slip in an induction motor. This frequency is added to the commanded output frequency based on motor current.	Parameter Number	214
	Related Parameters	133
	Access Rule	GET/SET
	Data Type	UINT
	Group	Drive Advanced Setup
	Units	0.1 Hz
	Minimum Value	0.0 Hz
	Maximum Value	10.0 Hz
	Default Value	2.0 Hz

Process Time Lo Scales the time value when the drive is running at Parameter 134 (Minimum Freq). When set to a value other than zero, Parameter 110 (Process Display) indicates the duration of the process.	Parameter Number	215
	Related Parameters	110, 134
	Access Rule	GET/SET
	Data Type	UINT
	Group	Drive Advanced Setup
	Units	Hz
	Minimum Value	0.00
	Maximum Value	99.99
	Default Value	0.00

Process Time Hi Scales the time value when the drive is running at Parameter 135 (Maximum Freq). When set to a value other than zero, Parameter 110 (Process Display) indicates the duration of the process.	Parameter Number	216
	Related Parameters	110, 135
	Access Rule	GET/SET
	Data Type	UINT
	Group	Drive Advanced Setup
	Units	Hz
	Minimum Value	0.0
	Maximum Value	99.99
	Default Value	0.00

Bus Reg Mode Enables the bus regulator. 0 = Disable 1 = Enabled	Parameter Number	217
	Related Parameters	—
	Access Rule	GET/SET
	Data Type	UINT
	Group	Drive Advanced Setup
	Units	—
	Minimum Value	0
	Maximum Value	1
	Default Value	1

Current Limit 2 Maximum output current that is allowed before current limiting occurs. This parameter is only active if Parameters 151…154 (Digital In x Sel) is set to Option 25 (Current Lmt2) and is active.	Parameter Number	218
	Related Parameters	133, 151…154, 189
	Access Rule	GET/SET
	Data Type	UINT
	Group	Drive Advanced Setup
	Units	0.1 A
	Minimum Value	0.0 A
	Maximum Value	Drive rated amps x 1.8
	Default Value	Drive rated amps x 1.5

Skip Frequency Sets the frequency at which the drive will not operate.	Parameter Number	219
	Related Parameters	220
	Access Rule	GET/SET
	Data Type	UINT
	Group	Drive Advanced Setup
	Units	0.1 Hz
	Minimum Value	0.0
	Maximum Value	400.0 Hz
	Default Value	0.0 Hz

Skip Freq Band Determines the band width around Parameter 219 (Skip Frequency). Parameter 220 (Skip Freq Band) is split applying 1/2 above and 1/2 below the actual skip frequency. A setting of 0.0 disables this parameter.	Parameter Number	220
	Related Parameters	219
	Access Rule	GET/SET
	Data Type	UINT
	Group	Drive Advanced Setup
	Units	0.1 Hz
	Minimum Value	0.0 Hz
	Maximum Value	30.0 Hz
	Default Value	0.0 Hz

Figure 81 - Skip Frequency Band

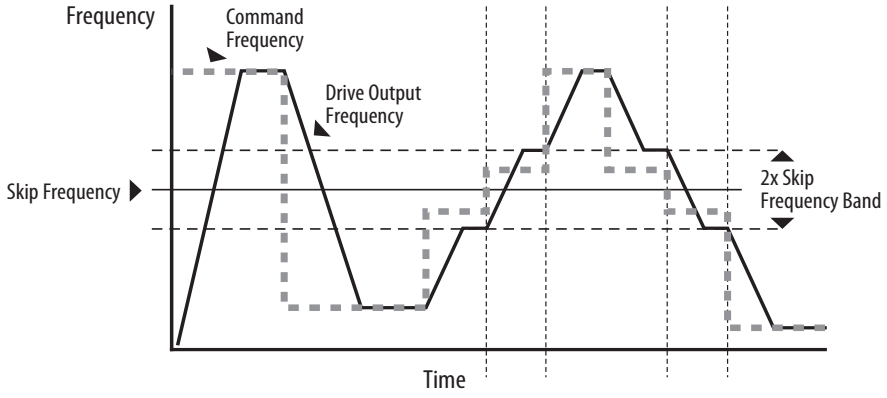

Stall Fault Time Sets for the fault time that the drive will remain in stall mode before a fault is issued. 0 = 60 sec (Default) 1 = 120 sec 2 = 240 sec 3 = 360 sec 4 = 480 sec 5 = Flt Disabled	Parameter Number	221
	Access Rule	GET/SET
	Data Type	UINT
	Group	Drive Advanced Setup
	Units	—
	Minimum Value	0
	Maximum Value	5
	Default Value	0

Var PWM Disable	Parameter Number	224
Stop drive before changing this parameter. Enables/disables a feature that varies the carrier frequency for the PWM output waveform that is defined by Parameter 191 (PWM Frequency). 0 = Enabled 1 = Disabled Disabling this feature when low frequency condition exists may result in IGBT stress and nuisance tripping.	Related Parameters	191
	Access Rule	GET/SET
	Data Type	UINT
	Group	Drive Advanced Setup
	Units	—
	Minimum Value	0
	Maximum Value	1
	Default Value	0

Torque Perf Mode	Parameter Number	225
Stop drive before changing this parameter. Enables/disables sensorless vector control operation. 0 = V/Hz 1 = Sensrls Vect	Related Parameters	184…187, 227
	Access Rule	GET/SET
	Data Type	UINT
	Group	Drive Advanced Setup
	Units	—
	Minimum Value	0
	Maximum Value	1
	Default Value	1

Motor NP FLA Set to the motor nameplate full load amps.	Parameter Number	226
	Related Parameters	
	Access Rule	GET/SET
	Data Type	UINT
	Group	Drive Advanced Setup
	Units	0.1 A
	Minimum Value	0.1
	Maximum Value	Drive rated amps x 2
	Default Value	Drive rated amps

Autotune Stop drive before changing this parameter. Provides an automatic method for setting Parameter 228 (IR Voltage Drop) and Parameter 229 (Flux Current Ref), that affect sensorless vector performance. Parameter 226 (Motor NP FLA) must be set to the motor nameplate full load amps before running the Autotune procedure. 0 = Ready/Idle (Default) 1 = Static Tune 2 = Rotate Tune **Ready (0) –** Parameter returns to this setting following a Static Tune or Rotate Tune. **Static Tune (1) –** A temporary command that initiates a non-rotational motor stator resistance test for the best possible automatic setting of Parameter 228 (IR Voltage Drop). A start command is required within 30 seconds of setting this parameter following initiation of this setting. The parameter returns to Ready (0) following the test, at which time another start transition is required to operate the drive in normal mode. Used when motor cannot be uncoupled from the load. **Rotate Tune (2) –** A temporary command that initiates a Static Tune followed by a rotational test for the best possible automatic setting of Parameter 229 (Flux Current Ref). A start command is required following initiation of this setting. The parameter returns to Ready (0) following the test, at which time another start transition is required to operate the drive in normal mode.	Parameter Number	227
	Related Parameters	225, 226, 228, 229
	Access Rule	GET/SET
	Data Type	UINT
	Group	Drive Advanced Setup
	Units	—
	Minimum Value	0
	Maximum Value	3
	Default Value	0

IMPORTANT Used when motor is uncoupled from the load. Results may not be valid if a load is coupled to the motor during this procedure. Applies to rotate tune only.



ATTENTION: Rotation of the motor in an undesired direction can occur during this procedure. To guard against possible injury and/or equipment damage, it is recommended that the motor be disconnected from the load before proceeding.

If the Autotune routine fails, an F80 SVC Autotune fault is displayed.

IR Voltage Drop Value of volts dropped across the resistance of the motor stator.	Parameter Number	228
	Related Parameters	227
	Access Rule	GET/SET
	Data Type	UINT
	Group	Drive Advanced Setup
	Units	0.1V AC
	Minimum Value	0.0
	Maximum Value	230
	Default Value	Based on Drive Rating

Flux Current Ref Value of amps for full motor flux.	Parameter Number	229
	Related Parameter	227
	Access Rule	GET/SET
	Data Type	UINT
	Group	Drive Advanced Setup
	Units	0.01 A
	Minimum Value	0.00
	Maximum Value	Motor NP Volts
	Default Value	Based on Drive Rating

EM Brk OFF Delay Sets the time that the drive will remain at minimum frequency before ramping to the commanded frequency and energizing the brake coil relay when Parameter 137 (Stop Mode) is set to Option 8 or 9.	Parameter Number	260
	Related Parameters	134, 137
	Access Rule	GET/SET
	Data Type	UNIT
	Group	Drive Advanced Setup
	Units	0.01 sec
	Minimum Value	0.01 sec
	Maximum Value	10 sec
	Default Value	0.0 sec

Figure 82 - EM Brk OFF Delay

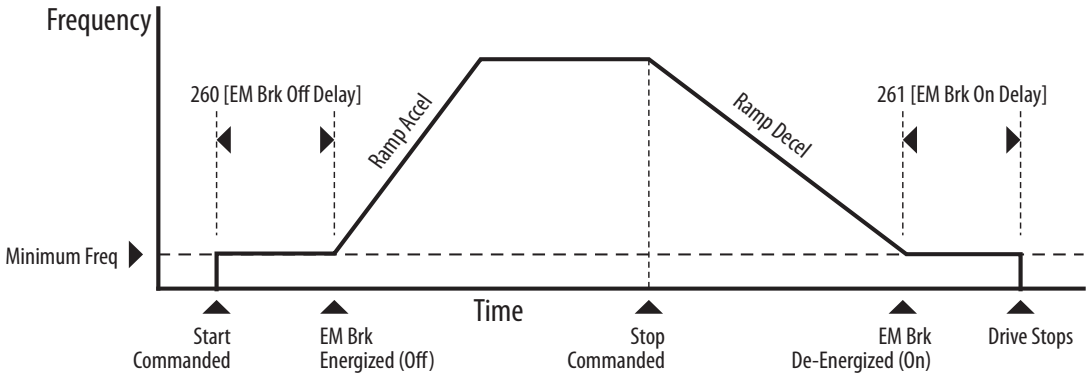

EM Brk On Delay		
Sets the time that the drive will remain at minimum frequency before stopping and de-energizing the brake coil relay when Parameter 137 (Stop Mode) is set to Option 8 or 9.	Parameter Number	261
	Related Parameters	134, 137
	Access Rule	GET/SET
	Data Type	UNIT
	Group	Drive Advanced Setup
	Units	0.01 sec
	Minimum Value	0.01 sec
	Maximum Value	10.00 sec
	Default Value	0.0 sec

MOP Reset Sel		
Sets the drive to save the current MOP Reference command. 0 = Zero MOP Ref This option clamps Parameter 169 (Internal Freq) at 0.0 Hz when drive is not running. 1 = Save MOP Ref (Default) Reference is saved in Parameter 169 (Internal Freq).	Parameter Number	262
	Related Parameters	169
	Access Rule	Get/Set
	Data Type	UINT
	Group	Drive Advanced Setup
	Units	—
	Minimum Value	0
	Maximum Value	1
	Default Value	1

DB Threshold		
Sets the DC bus Voltage Threshold for Dynamic Brake operation. If the DC bus voltage falls below the value set in this parameter, the Dynamic Brake will not turn on. Lower values will make the Dynamic Braking function more responsive, but may result in nuisance Dynamic Brake activation.	Parameter Number	263
	Access Rule	GET/SET
	Data Type	UINT
	Group	Drive Advanced Setup
	Units	—
	Minimum Value	0.0%
	Maximum Value	110.0%
	Default Value	100%

ATTENTION: Equipment damage may result if this parameter is set to a value that causes the dynamic braking resistor to dissipate excessive power. Parameter settings less than 100% should be carefully evaluated to ensure that the dynamic brake resistor's wattage rating is not exceeded. In general, values less than 90% are not needed. This parameter's setting is especially important if Parameter 182 (DB Resistor Sel) is set to "2" (No Protection).

Comm Write Mode	Parameter Number	264
Determines whether parameter changes made over communication port are saved and stored in Non-Volatile Storage (NVS) or RAM only. If they are stored in RAM, the values will be lost at power-down. 0 = Save (Default) 1 = RAM Only	Access Rule	GET/SET
	Data Type	BOOL
	Group	Drive Advanced Setup
	Units	—
	Minimum Value	0
	Maximum Value	1
	Default Value	0

ATTENTION: Risk of equipment damage exists. If a controller is programmed to write parameter data to Non-Volatile Storage (NVS) frequently, the NVS will quickly exceed its life cycle and cause the drive to malfunction. Do not create a program that frequently uses configurable outputs to write parameter data to NVS unless Parameter 264 (Comm Write Mode) is set to Option 1.

Linear List of Parameters for Bulletins 280E, 281E, and 284E

Table 28 - ArmorStart Parameters

Parameter Number	Parameter Name	Description	Factory Default	Group	Controller
1	Hdw Inputs	This parameter provides status of hardware inputs.	0	Basic Status	Common
2	Network Inputs	This parameter provides status of network inputs.	0	Basic Status	Common
3	Network Outputs	This parameter provides status of network outputs.	0	Basic Status	Common
4	Trip Status	This parameter provides trip identification.	0	Basic Status	Common
5	Starter Status	This parameter provides the status of the starter.	0	Basic Status	Common
6	InternalLinkStat	Status of the internal network connections.	0	Basic Status	Common
7	Starter Command	The parameter provides the status of the starter command.	0	Basic Status	Common
8	Network Override	This parameter allows for the local logic to override a Network fault.	0	Misc. Configuration	Common
9	Comm Override	This parameter allows for local logic to override an absence of an I/O connection.	0	Misc. Configuration	Common
13	Prod Assy Word 0	This parameter is used to build bytes 0…1 for produced assembly 150 or 151.	0	Network Configuration	Common
14	Prod Assy Word 1	This parameter is used to build bytes 2…3 for produced assembly 150 or 151.	0	Network Configuration	Common
15	Prod Assy Word 2	This parameter is used to build bytes 4…5 for produced assembly 150 or 151.	0	Network Configuration	Common
16	Prod Assy Word 3	This parameter is used to build bytes 6…7 for produced assembly 150 or 151.	0	Network Configuration	Common
22	Breaker Type	This parameter identifies the Bulletin 140M used in this product.	0 = 140M-D8N-C10	Basic Status	Common
23	Pr FltReset Mode	This parameter configures the Protection Fault reset mode.	0 = Manual	Starter Protection	Common
24	Pr Fault Enable	This parameter enables the Protection Fault by setting the bit to 1.	12419	Starter Protection	Common
25	Pr Fault Reset	This parameter resets the Protection Fault on a transition 0 > 1.	0	Starter Protection	Common
26	Str Net FltState	This parameter along with Parameter 27 (Str Net FltValue), defines how the starter will respond when a fault occurs as determined by Parameter 27.	0 = Goto Fault Value	Starter Protection	Common
27	Str Net FltValue	This parameter determines how the starter will be commanded in the event of a fault.	0 = OFF	Starter Protection	Common
28	Str Net IdlState	This parameter determines response when Idle fault occurs.	0 = Goto Fault Value	Starter Protection	Common
29	Str Net IdlValue	This parameter determines the state that starter assumes when the network is idle and Parameter 28 (Str Net IdlState) is set to “Goto Fault Value”.	0 = OFF	Starter Protection	Common
30	Off-to-On Delay	This parameter allows the installer to program a time duration before being reported ON.	0	User I/O Configuration	Common
31	On-to-Off Delay	This parameter allows the installer to program a time duration before being reported OFF.	0	User I/O Configuration	Common
32	In Sink/Source	This parameter allows the installer to program the inputs to be sink or source.	0 = Sink	User I/O Configuration	Common

Table 28 - ArmorStart Parameters

Parameter Number	Parameter Name	Description	Factory Default	Group	Controller
33	OutA Pr FltState	This parameter along with Parameter 34 (OutA Pr FltValue), defines how Output A will respond when a trip occurs.	0 = Goto PrFlt Value	User I/O Configuration	Common
34	OutA Pr FltValue	This parameter determines the state the Output A.	0 = Open	User I/O Configuration	Common
35	OutA Net FltState	This parameter along with Parameter 36 (OutA Net FltValue), defines how Output A will respond.	0 = Goto Fault Value	User I/O Configuration	Common
36	OutA Net FltValue	This parameter determines the state that Output.	0 = Open	User I/O Configuration	Common
37	OutA Net IdlState	This parameter along with Parameter 38 (OutA Net IdlValue), defines how Output A will respond when the network is idle.	0 = Goto Idle Value	User I/O Configuration	Common
38	OutA Net IdlValue	This parameter determines the state that Output A assumes when the network is idle and Parameter 37 (OutA Net IdlState) is set to "0".	0 = Open	User I/O Configuration	Common
39	OutB Pr FltState	This parameter along with Parameter 40 (OutB Pr FltValue), defines how Output B will respond when a protection trip occurs.	0 = Goto PrFlt Value	User I/O Configuration	Common
40	OutB Pr FltValue	This parameter determines the state the Out B assumes when a protection trip occurs and Parameter 39 (OutB Pr FltState) is set to "0".	0 = Open	User I/O Configuration	Common
41	OutB Net FltState	This parameter along with Parameter 42 (OutB Net FltValue), defines how Output B will respond when a network fault occurs.	0 = Goto Idle Value	User I/O Configuration	Common
42	OutB Net FltValue	This parameter determines the state that Output B assumes when a network fault occurs and Parameter 41 (OutB Net FltState) is set to "0".	0 = Open	User I/O Configuration	Common
43	OutB Net IdlState	This parameter along with Parameter 44 (OutB Net IdlValue), defines how Output B will respond when the network is idle.	0 = Goto PrFlt Value	User I/O Configuration	Common
44	OutB Net IdlValue	This parameter determines the state that Output B assumes when the network is idle and Parameter 43 (OutB Net IdlState) is set to "0".	0 = Open	User I/O Configuration	Common
45	Keypad Mode	This parameter selects if the keypad operation is maintained or momentary.	0 = Maintained	Misc. Configuration	Common
46	Keypad Disable	This parameter disables all keypad function except for the OFF and RESET buttons.	0 = Not Disabled	Misc. Configuration	Common
47	Set To Defaults	This parameter if set to 1 will set the device to the factory defaults.	0 = No Operation	Misc. Configuration	Common
48	Drive Control	This parameter provides the status of drive parameters.	0	Drive I/O Configuration	284E
49	DrvIn Pr FltState	This parameter, along with Parameter 50 (DrvIn Pr FltValue), defines how the Drive Digital Inputs 1…4 will respond when a protection trip occurs.	0 = Go to PrFlt Value	Drive I/O Configuration	284E
50	DrvIn Pr FltValue	This parameter determines the state of Drive Digital Inputs 1…4, assumes when a trip occurs.	0 = Open	Drive I/O Configuration	284E
51	DrvIn Net FltState	This parameter, along with Parameter 52 (DrvIn Net FltValue), defines how the Drive Digital Inputs 1…4 will respond when a network fault occurs.	0 = Go to Fault Value	Drive I/O Configuration	284E
52	DrvIn Net FltValue	This parameter determines the state of Drive Digital Inputs 1…4 when a network fault occurs and Parameter 51 (DrvIn Net FltState) is set to "0".	0 = OFF	Drive I/O Configuration	284E
53	DrvIn Net FltState	This parameter, along with Parameter 54 (DrvIn Net FltValue), defines how the Drive Digital Inputs 1…4 will respond when a DeviceNet™ network is idle.	0 = Go to Fault Value	Drive I/O Configuration	284E

Table 28 - ArmorStart Parameters

Parameter Number	Parameter Name	Description	Factory Default	Group	Controller
54	DrvIn Net FltValue	This parameter determines the state that Drive Digital Inputs 1…4 assume when the network is idle and Parameter 53 (DrvIn Net FltState) is set to "0".	0 = OFF	Drive I/O Configuration	284E
56	Base Enclosure	Indicates the ArmorStart Base unit enclosure rating.	1	Basic Status	Common
57	Base Options	Indicates the options for the ArmorStart Base unit.	0	Basic Status	Common
58	Wiring Options	This parameter provides the Wiring Options.	0	Basic Status	Common
59	Starter Enclosure	This parameter provides the Starter Enclosure.	1	Basic Status	Common
60	Starter Options	This parameter provides the Starter Options.	0	Basic Status	Common
61	Last PR Fault	This parameter provides the Last PR Fault.	0 = None	Basic Status	Common
62	Warning Status	This parameter provides the Warning Status.	0	Basic Status	Common
63	Base Trip	This parameter provides the Base Module Trip Status.	0	Basic Status	Common
101	Phase A Current	This parameter provides the current of Phase A.	0	Starter Display	DOL
102	Phase B Current	This parameter provides the current of Phase B.	0	Starter Display	DOL
103	Phase C Current	This parameter provides the current of Phase C.	0	Starter Display	DOL
104	Average Current	This parameter provides the average current.	0	Starter Display	DOL
105	Therm Utilized	This parameter displays the % Thermal Capacity used.	0	Starter Display	DOL
106	FLA Setting	The motor's full load current rating	See Table 23.	Starter Setup	DOL
107	Overload Class	Selects the overload class.	1 = Overload Class 10	Starter Setup	DOL
108	OL Reset Level	Selects the % Thermal Capacity that an overload can be cleared.	75	Starter Setup	DOL
101	Output Freq	Output frequency present at T1, T2 & T3 (U, V & W)	Read Only	Drive Display	284E
102	Commanded Freq	Value of the active frequency command	Read Only	Drive Display	284E
103	Output Current	Output current present at T1, T2 & T3 (U, V & W)	Read Only	Drive Display	284E
104	Output Voltage	Output voltage present at T1, T2 & T3 (U, V & W)	Read Only	Drive Display	284E
105	DC Bus Voltage	Present DC bus voltage level	Read Only	Drive Display	284E
106	Drive Status	Present operating condition of the drive.	Read Only	Drive Display	284E
107…109	Fault x Code	A code that represents a drive fault.	Read Only	Drive Display	284E
110	Process Display	The output frequency that is scaled by Parameter 199 (Process Factor).	Read Only	Drive Display	284E
112	Control Source	Displays the source of the Start Command and Speed Reference.	5 = RS485 (DSI) Port	Drive Display	284E
113	Control In	Status of control inputs. These can be used in DeviceLogix	Read Only	Drive Display	284E
114	Dig In Status	Status of the control terminal block digital inputs.	0	Drive Display	284E
115	Comm Status	Status of the communications ports	0	Drive Display	284E
116	Control SW Ver	Main Control Board software version for AC Drive.	Read Only	Drive Display	284E
118	Elapsed Run Time	Accumulated time drive is outputting power.	Read Only	Drive Display	284E
122	Output Power	Output power present at T1, T2 & T3 (U, V & W).	Read Only	Drive Display	284E
123	Output Power Fctr	The angle in electrical degrees between motor voltage and motor current.	Read Only	Drive Display	284E

Table 28 - ArmorStart Parameters

Parameter Number	Parameter Name	Description	Factory Default	Group	Controller
124	Drive Temp	Present operating temperature of the drive power section.	Read Only	Drive Display	284E
125	Counter Status	The current value of the counter when counter is enabled.	Read Only	Drive Display	284E
126	Timer Status	The current value of the timer when timer is enabled.	Read Only	Drive Display	284E
129	Torque Current	Displays the current value of the motor torque current as measured by the drive.	Read Only	Drive Display	284E
131	Motor NP Volts	Set to the motor name plate rated volts.	Based on Drive Rating	Drive Setup	284E
132	Motor NP Hertz	Set to the motor nameplate rated frequency.	60 Hz	Drive Setup	284E
133	Motor OL Current	Set to the maximum allowable current.	Based on Drive Rating	Drive Setup	284E
134	Minimum Freq	Sets the lowest frequency that the drive will output continuously.	0.0 Hz	Drive Setup	284E
135	Maximum Freq	Sets the highest frequency that the drive will output continuously.	60 Hz	Drive Setup	284E
136	Start Source	Sets the control scheme that is used to start the Bulletin 284E ArmorStart.	5 = Comm Port (RS485 (DSI))	Drive Setup	284E
137	Stop Mode	Sets the Valid Stop Mode for the Bulletin 284E ArmorStart.	9 = Ramp + EM Brk	Drive Setup	284E
138	Speed Reference	Sets the Valid Speed References for the Bulletin 284E ArmorStart.	5 = Comm Port	Drive Setup	284E
139	Accel Time 1	Sets the rate of acceleration for all speed increases.	10.0 Secs	Drive Setup	284E
140	Decel Time 1	Sets the rate of deceleration for all speed decreases.	10.0 Secs	Drive Setup	284E
141	Reset To Defaults	Used to reset drive to factory default settings	0 = Ready/Idle	Drive Setup	284E
143	Motor OL Ret	Enables/Disables the Motor Overload Retention function.	0 = Disabled	Drive Setup	284E

Table 29 - Bulletin 284E Advance Setup Parameter Descriptions

Parameter Number	Parameter Name	Description	Factory Default	Group
151…154	Digital In 1 Sel Digital In 2 Sel Digital In 3 Sel Digital In 4 Sel	Selects the function for the digital inputs.	See Table 24.	Drive Advanced Setup
155	Relay Out Sel	Sets the condition that changes the state of the output relay contacts.	0 = Ready/Fault See Table 25.	Drive Advanced Setup
156	Relay Out Level	Sets the trip point for the digital output relay if the value of Parameter 155 (Relay Out Sel) is 6, 7, 8, 10, 16, 17, 18, or 20.	0.0	Drive Advanced Setup
169	Internal Freq	Provide the frequency command to drive when Parameter 138 (Speed Reference) is set to “1” (Internal Freq).	60.0 Hz	Drive Advanced Setup
170…177	Preset Freq 0 Preset Freq 1 Preset Freq 2 Preset Freq 3 Preset Freq 4 Preset Freq 5 Preset Freq 6 Preset Freq 7	Provides a fixed frequency command value when Parameters 151…154 (Digital In x Sel) is set to Option 4 (Preset Frequencies).	See Table 26.	Drive Advanced Setup
178	Jog Frequency	Sets the output frequency when the jog command is issued.	10.0 Hz	Drive Advanced Setup

Table 29 - Bulletin 284E Advance Setup Parameter Descriptions

Parameter Number	Parameter Name	Description	Factory Default	Group
179	Jog Accel/Decel	Sets the acceleration and deceleration time when a jog command is issued.	10.0 Secs	Drive Advanced Setup
180	DC Brake Time	Sets the length of time that DC brake current is injected into the motor. See Parameter 181 (DC Brake Level).	0.0 Secs	Drive Advanced Setup
181	DC Brake Level	Defines the maximum DC brake current, in amps, applied to the motor when Parameter 137 (Stop Mode) is set to either Ramp or DC Brake.	Drive Rated Amps x 0.05	Drive Advanced Setup
182	DB Resistor Sel	Used to set percent duty cycle for external dynamic braking.	0 = Disabled	Drive Advanced Setup
183	S Curve %	Sets the percentage of acceleration or deceleration time that is applied to ramp as S Curve. Time is added, half at the beginning and half at the end of the ramp.	0% (Disabled)	Drive Advanced Setup
184	Boost Select	Sets the boost voltage (% of Parameter 131 (Motor NP Volts)) and redefines the Volts per Hz curve. Active when Parameter 225 (Torque Perf Mode) = 0 (V/Hz). Drive may add additional voltage unless Option 5 is selected.	8 = 5.0 (2.5 for 5 Hp drives)	Drive Advanced Setup
185	Start Boost	Sets the boost voltage (% of Parameter 131 (Motor NP Volts)) and redefines the Volts per Hz curve when Parameter 184 (Boost Select) = 0 (Custom V/Hz) and Parameter 225 (Torque Perf Mode) = 0 (V/Hz).	2.5%	Drive Advanced Setup
186	Brake Voltage	Sets the frequency where brake voltage is applied when Parameter 184 (Boost Select) = 0 (Custom V/Hz) and Parameter 225 (Torque Perf Mode) = 0 (V/Hz).	25.0%	Drive Advanced Setup
187	Brake Frequency	Sets the frequency where brake frequency is applied when Parameter 184 (Boost Select) = 0 (Custom V/Hz) and Parameter 225 (Torque Perf Mode) = 0 (V/Hz).	15.0 Hz	Drive Advanced Setup
188	Maximum Voltage	Sets the highest voltage that the drive will output.	Drive Rated Volts	Drive Advanced Setup
189	Current Limit 1	Maximum output current that is allowed before current limiting occurs.	Drive Rated Amps x 1.5	Drive Advanced Setup
190	Motor OL Select	Drive provides Class 10 motor overload protection. Setting 0…2 select the derating factor for I^2t overload function.	0 = No Derate	Drive Advanced Setup
191	PWM Frequency	Sets the carrier frequency for the PWM output waveform. Figure 80 provides derating guidelines that are based on the PWM frequency setting.	4.0 Hz	Drive Advanced Setup
192	Auto Rstrt Tries	Set the maximum number of times the drive attempts to reset a fault and restart.	0	Drive Advanced Setup
193	Auto Rstrt Delay	Sets time between restart attempts when Parameter 192 (Auto Rstrt Tries) is set to a value other than zero.	1.0 Secs	Drive Advanced Setup
194	Start At PowerUp	Enables/disables a feature that allows a Start or Run command to automatically cause the drive to resume running at command speed after the drive input is restored.	0 = Disabled	Drive Advanced Setup
195	Reverse Disable	Enables/disables the function that allows the direction of the motor rotation to be changed.	0 = Disabled	Drive Advanced Setup
196	Flying Start En	Sets the condition that allows the drive to reconnect to a spinning motor at actual RPM.	0 = Disabled	Drive Advanced Setup
197	Compensation	Enables/disables correction options that may improve problems with motor instability.	1 = Electrical	Drive Advanced Setup
198	SW Current Trip	Enables/disables a software instantaneous (within 100 ms) current trip.	0.0 (Disabled)	Drive Advanced Setup
199	Process Factor	Scales the output frequency value that is displayed by Parameter 110 (Process Display).	30.0	Drive Advanced Setup
200	Fault Clear	Resets a fault and clears the fault queue.	0 = Ready/Idle	Drive Advanced Setup
201	Program Lock	Protects parameters against change by unauthorized personnel.	0 = Unlocked	Drive Advanced Setup

Table 29 - Bulletin 284E Advance Setup Parameter Descriptions

Parameter Number	Parameter Name	Description	Factory Default	Group
205	Comm Loss Action	Selects the drive's response to a loss of the communication connection or excessive communication errors.	0 = Fault	Drive Advanced Setup
206	Comm Loss Time	Sets the time that the drive remains in communication loss before implanting the option selected in Parameter 205 (Comm Loss Action).	15.0 Secs	Drive Advanced Setup
214	Slip Hertz @ FLA	Compensates for the inherent slip in an induction motor. This frequency is added to the commanded output frequency based on motor current.	2.0 Hz	Drive Advanced Setup
215	Process Time Lo	Scales the time value when the drive is running at Parameter 134 (Minimum Freq). When set to a value other than zero, Parameter 110 (Process Display) indicates the duration of the process.	0.00	Drive Advanced Setup
216	Process Time Hi	Scales the time value when the drive is running at Parameter 135 (Maximum Freq). When set to a value other than zero, Parameter 110 (Process Display) indicates the duration of the process.	0.00	Drive Advanced Setup
217	Bus Reg Mode	Enables the bus regulator.	1 = Enabled	Drive Advanced Setup
218	Current Limit 2	Maximum output current that is allowed before current limiting occurs.	Drive Rated Amps x 1.5	Drive Advanced Setup
219	Skip Frequency	Sets the frequency at which the drive will not operate.	0.0 Hz	Drive Advanced Setup
220	Skip Freq Band	Determines the brand width around Parameter 219 (Skip Frequency). Parameter 220 (Skip Freq Band) is split applying 1/2 above and 1/2 below the actual skip frequency.	0.0 Hz	Drive Advanced Setup
221	Stall Fault Time	Sets for the fault time that the drive will remain in stall mode before a fault is issued.	0 = 60 Seconds	Drive Advanced Setup
224	Var PWM Disable	Enables/disables a feature that varies the carrier frequency for the PWM output waveform that is defined by Parameter 191 (PWM Frequency).	0 = Enabled	Drive Advanced Setup
225	Torque Perf Mode	Enables/disables sensorless vector control operation.	1 = Sensrls Vect	Drive Advanced Setup
226	Motor NP FLA	Set to the motor nameplate full load amps.	Drive Rated Amps	Drive Advanced Setup
227	Autotune	Provides an automatic method for setting Parameter 228 (IR Voltage Drop) and Parameter 229 (Flux Current Ref), that affect sensorless vector performance.	0 = Ready/Idle	Drive Advanced Setup
228	IR Voltage Drop	Value of volts dropped across the resistance of the motor stator.	Based on Drive Rating	Drive Advanced Setup
229	Flux Current Ref	Value of amps for full motor flux.	Based on Drive Rating	Drive Advanced Setup
260	EM Brk OFF Delay	Sets the time that the drive will remain at minimum frequency before ramping to the commanded frequency and energizing the brake coil relay when Parameter 137 (Stop Mode) is set to Option 8 or 9.	0.0 Secs	Drive Advanced Setup
261	EM Brk On Delay	Sets the time that the drive will remain at minimum frequency before stopping and de-energizing the brake coil relay when Parameter 137 (Stop Mode) is set to Option 8 or 9.	0.0 Secs	Drive Advanced Setup
262	MOP Reset Sel	Sets the drive to save the current MOP Reference command.	1 = Save MOP Ref	Drive Advanced Setup
263	DB Threshold	Sets the DC bus Voltage Threshold for Dynamic Brake operation.	100%	Drive Advanced Setup
264	Comm Write Mode	Determines whether parameter changes made over the communication port are saved and stored in Non-Volatile Storage (NVS) or RAM only.	0 = Save	Drive Advanced Setup

How to Configure an Explicit Message

Programming ControlLogix Explicit Message

Explicit Messaging with ControlLogix

In the ControlLogix® platform, explicit messaging can be done easily from within a logic program. The request and response is configured within the MSG function. The MSG function can be found in the Input/Output tab of RSLogix 5000.

Setting Up the MSG Instruction

A tag name must be given to the MSG function before the rest of the information can be defined. In this example, a tag was created with the name explicit_mess. After the instruction has been named, click the gray box ... to define the rest of the instruction.

Figure 83 - MSG Function Found in the Input/Output Tab



Formatting an Explicit Message

ControlLogix scanners and bridges accommodate both downloading Explicit Message Requests and uploading Explicit Message Responses. The message format is shown in Figure 84.

Figure 84 - ControlLogix Message Format in RSLogix 5000

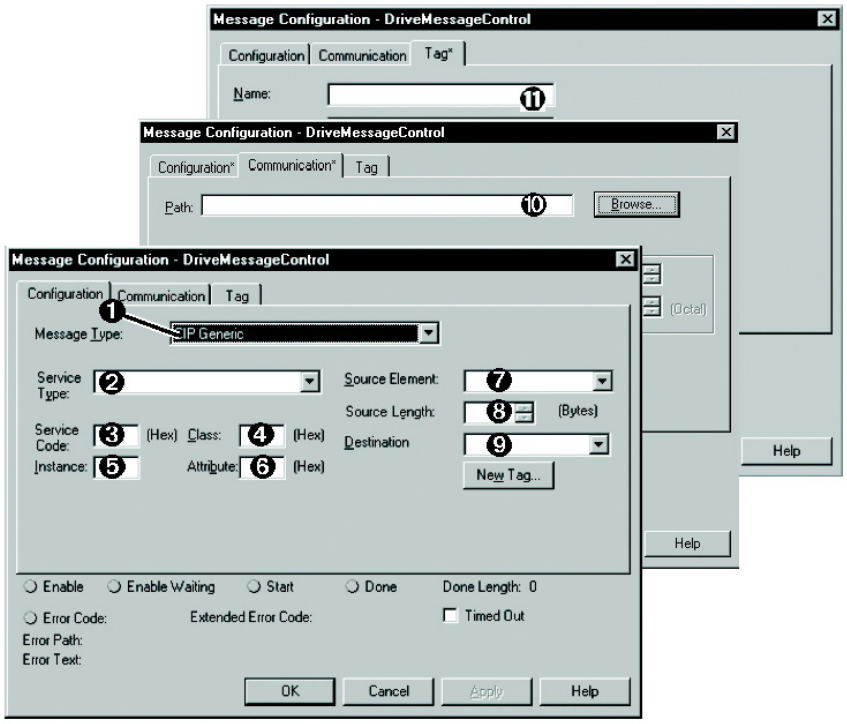

Box	Description
❶	**Message Type** The message type is usually CIP Generic.
❷	**Service Type** The service type indicates the service (for example, Get Attribute Single or Set Attribute Single) that you want to perform.
❸	**Service Code** The service code is the code for the requested EtherNet/IP service. This value changes based on the Service Type that has been selected. In most cases, this is a read-only box. If you select "Custom" in the Service Type box, then you need to specify a service code in this box (for example, 4B for a Get Attributes Scattered service or 4C for a Set Attributes Scattered service).
❹	**Class** The class is an EtherNet/IP class.
❺	**Instance** The instance is an instance (or object) of an EtherNet/IP class.
❻	**Attribute** The attribute is a class or instance attribute.
❼	**Source Element** This box contains the name of the tag for any service data to be sent from the scanner or bridge to the module and drive.

Box	Description
❽	**Source Length** This box contains the number of bytes of service data to be sent in the message.
❾	**Destination** This box contains the name of the tag that receives service response data from the module and drive.
❿	**Path** The path is the route that the message follow.s **Note:** Click **Browse** to find the path or type in the name of a module that you previously mapped.
⓫	**Name** The name for the message.

Performing Explicit Messages

IMPORTANT There are five basic events in the Explicit Messaging process that is defined below. The details of each step vary depending on the controller. See the documentation for your controller.

Figure 85 - Explicit Message Process

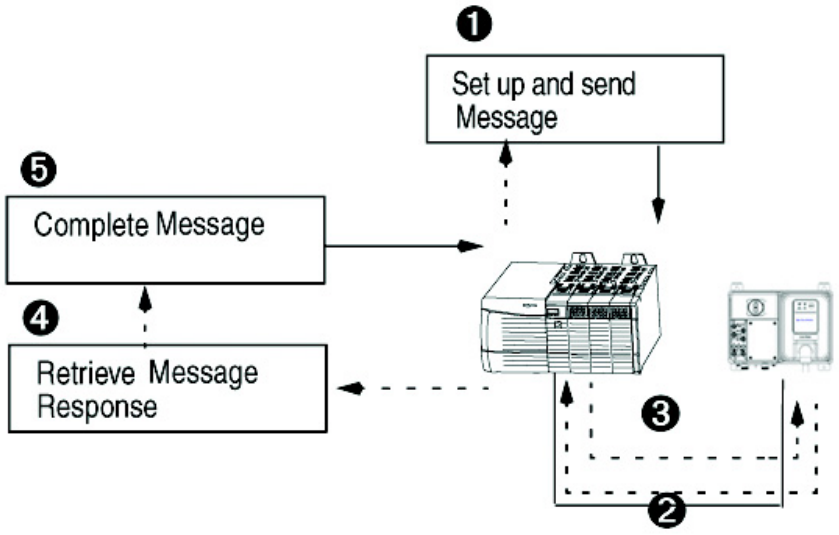

Box	Description
❶	Format the required data and set up the ladder logic program to send an Explicit Message Request to the scanner or bridge module (download).
❷	The scanner or bridge module transmits the Explicit Message Request to the slave device over the EtherNet/IP network.
❸	The slave device transmits the Explicit Message Response back to the scanner. The data is stored in the scanner buffer.
❹	The controller retrieves the Explicit Message Response from the scanner's buffer (upload).
❺	The Explicit Message is complete.

The MSG (message) instruction handles all explicit messaging that is initiated by a Logix Controller program.

It automatically creates and manages TCP connections and CIP encapsulation sessions. The user has no direct influence on this process.

Figure 86 - Example — Message Configuration Tab

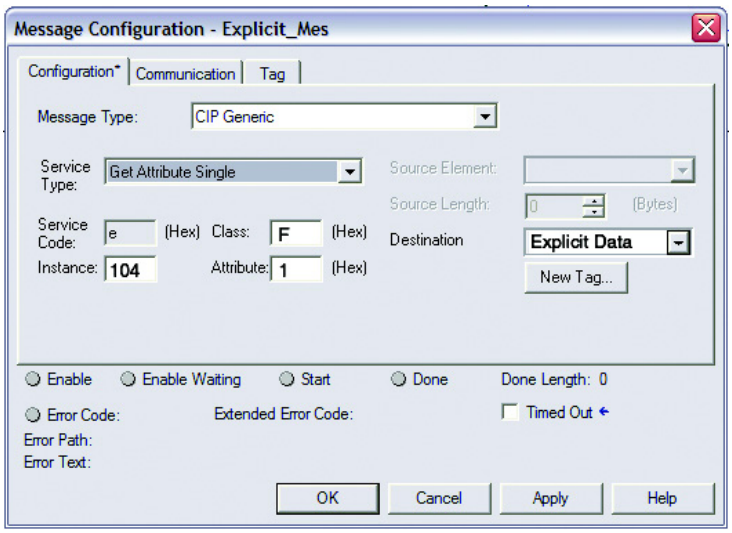

The Class, Instance, and Attribute define the actual information being requested. Additional configurations of these parameters can be found in Chapter B.

Diagnostics

Overview

This chapter describes the fault diagnostics of the ArmorStart Distributed Motor Controller and the conditions that cause various faults to occur.

Protection Programming

Many of the protective features available with the ArmorStart Distributed Motor Controller can be enabled and adjusted through the programming parameters provided. For further details on programming, see Chapter 7, Bulletin 280E/281E/284E Programmable Parameters.

Fault Display

The ArmorStart Distributed Motor Controller comes equipped with a built-in LED status indication that provides four status LEDs and a Reset button.

Figure 87 - LED Status Indication and Reset



Clear Fault

You may clear a fault using the following methods:

- Remotely via network communications

  A remote reset is attempted upon detection of a rising edge (0 to 1 transition) of the “Fault Reset” bit in the various I/O assemblies. A remote reset is also attempted upon detection of the rising edge of the “Fault Reset” parameter.

- Locally via the “Reset” button on the LED Status indication keypad.

Fault Codes

Table 30 provides a reference of the Fault LED indications for Bulletin 280E, 281E, and Bulletin 284E Distributed Motor Controllers.

Table 30 - Fault Indication

Blink Pattern	Fault Types	
	Bulletin 280E/281E	**Bulletin 284E**
1	Short Circuit	Short Circuit
2	Overload Trip	Overload Trip
3	Phase Loss	Phase Short
4	Reserved	Ground Fault
5	Reserved	Stall
6	Control Power	Control Power
7	I/O Fault	I/O Fault
8	Over Temperature	Over Temperature
9	Phase Imbalance	Over Current
10	A3 Power Loss	A3 Power Loss
11	Reserved	Internal Communications
12	Reserved	DC Bus Fault
13	EEPROM Fault	EEPROM Fault
14	Hardware Fault	Hardware Fault
15	Reserved	Restart Retries
16	Reserved	Misc. Fault

Fault Definitions

Short Circuit

Short Circuit indicates that the Bulletin 140M motor protector has tripped, or that the internal wiring protection algorithm has detected an unsafe current surge. This fault cannot be disabled.

Overload Trip

The load has drawn excessive current and based on the overload trip class that is selected, the device has tripped. This fault cannot be disabled.

When using Bulletin 280, 281 with a mechanical motor brake actuator connected to motor out leads, care must be taken with 1 Hp (0.73 kW) or smaller loads as the current is elevated in those legs that influence the electronic overload and may cause nuisance phase imbalance or overload faults. An adjustment to the full load amps (FLA) setting to offset this additional current may be necessary.

Phase Loss

Indicates a missing supply phase. This fault can be disabled and is disabled by default.

Phase Short

Indicates the drive has detected a phase short. This fault cannot be disabled.

Ground Fault

Indicates the drive has detected a ground fault. This fault cannot be disabled.

Stall

Indicates the drive has detected a stall condition, indicating the motor has not reached full speed. This fault cannot be disabled.

Control Power

Indicates a loss of control power voltage or a blown control power circuit. This fault can be disabled and *is* disabled by default.

I/O Fault

This error can indicate a shorted sensor, shorted input device, or input wiring mistakes. It can also indicate a blown output fuse. This fault can be disabled and *is* disabled by default.

Over Temperature

Indicates that the operating temperature has been exceeded. This fault cannot be disabled.

Phase Imbalance

Indicates an imbalance supply voltage. This fault can be disabled and *is* disabled by default.

Over Current

Indicates the drive has detected an over current fault. This fault cannot be disabled.

A3 Power Loss

Power has been lost or has dropped below the 12V threshold. This fault can be disabled and *is* disabled by default.

Internal Communication Fault

Indicates an internal communication fault has been detected. This fault cannot be disabled.

DC Bus Fault

Indicates the drive has detected a DC Bus Fault. This fault cannot be disabled.

Electrically Erasable Programmable Read-Only Memory EEPROM Fault

This is a major fault, that renders the ArmorStart inoperable. This fault cannot be disabled.

Hardware Fault

This indicates an Internal FAN RPM is low, Internal temperature monitor failure, Internal Brake fuse opened, or incorrect base or control module. This fault cannot be disabled.

Restart Retries

This fault is generated when the drive detects that the auto retries count has been exceeded. This fault cannot be disabled.

Miscellaneous Faults

For Bulletin 284E units, this fault is actually the logical of several drive faults not specifically enumerated. This includes DB1 Brake fault, Heatsink Over Temperature (fault code F8), Params Defaulted fault (fault code F48), and SVC Autotune fault (fault code F80).

This fault cannot be disabled.

EtherNet/IP LED Status Indication

Figure 88 - EtherNet/IP LED



EtherNet/IP LED status and diagnostics consists of four LEDs.

- Link Activity/Status LEDS
  - Link1 Activity/Status (Port 1) – LED Color: Bicolor (Green/Yellow). see Table 31
  - Link2 Activity/Status (Port 2) – LED Color: Bicolor (Green/Yellow). see Table 31
- "MOD" LED – Bicolor Red/Green represents the Ethernet Module status, see Table 32
- "NET" LED – Bicolor Red/Green represents the Ethernet Network status, see Table 34

Table 31 - Link 1 or Link 2 Port Activity/Status

Link 1 or 2 Status LED	Description	Recommended Action
OFF	No link established	Verify network cabling, and correct, as needed.
Green	Link established at 100 Mbps	None
Flashing green	Transmit or receive activity present at 100 Mbps	None
Yellow	Link established at 10 Mbps	None
Flashing yellow	Transmit or receive activity present at 10 Mbps	None

Table 32 - Module Status Indicator

MOD Status LED	Summary	Requirement
Steady OFF	No power	If no power is supplied to the device, the module status indicator shall be steady OFF.
Steady Green	Device operational	If the device is operating correctly and the PLC is in Run mode, the module status indicator shall be steady green.
Flashing Green	Standby	If the device has not been configured or the PLC is not in Run mode, the module status indicator shall be flashing green.
Flashing Red	Minor fault	If the device has detected a recoverable minor fault, the module status indicator shall be flashing red. **Note:** An incorrect or inconsistent configuration would be considered a minor fault.
Steady Red	Major fault	If the device has detected a non-recoverable major fault, see Table 33.
Flashing Green/Red	Self-test	While the device is performing its power up testing, the module status indicator shall be flashing green/red.

See Parameter 63 “Base Trip” for the Base Module Trip Status.

Table 33 - “Steady Red” MOD LED Status (See Table 32.)

	Fault Type	Description
0	EEPROM Fault	Non-volatile memory value out of range for a local parameter, or a write failure is detected. This fault is also reflected by a solid red MOD status LED.
1	Internal Comm2	The Internal communication connection has timed out. This fault is also reflected by a flashing red MOD status LED.
2	Hardware Fault	Internal diagnostics checks failed. This fault is also reflected by a solid red MOD status LED.
3	Control Module	An illegal or unsupported Control Module product code or revision has been detected. Also reported if no Control Module is detected on power up. This fault is also reflected by a solid red MOD status LED.
4…15	Reserved	Reserved

Table 34 - Network Status Indicator

Indicator State	Summary	Requirement
Steady OFF	Not powered, no IP address	If the device does not have an IP address (or is powered OFF), the network status indicator shall be steady OFF.
Flashing Green	No connections	If the device has no established connections, but has obtained an IP address, the network status indicator shall be flashing green.
Steady Green	Connected	If the device has at least one established connection (even to the Message Router), the network status indicator shall be steady green.
Flashing Red	Connection timeout	If one or more of the connections in which this device is the target has timed out, the network status indicator shall be flashing red. This shall be left if only all timed out connections are re-established or if the device is reset.
Steady Red	Duplicate IP	If the device has detected that the IP address is already in use, the network status indicator shall be steady red.
Flashing Red/Green	Self-test	While the device is performing its power up testing, the network status indicator shall be flashing green/red.

Control Module LED Status and Reset

Figure 89 - LED Status Indication and Reset



The Control Module LED status and diagnostics consists of four status LEDs and a Reset button. The following is a brief explanation of the operation of each LED found on the Control Module.

Table 35 - Control Module LED Status Indication

LED	Definition	Recommended Action
Power	This LED is illuminated solid green when switched control power is present and with the proper polarity.	Verify 24V DC is present on A1 and A2. Check if the local disconnect is in the OFF position.
Run	This LED is illuminated solid green when a start command and control power is present.	Verify 24V DC is present on A1 and A3. Check if the user is properly commanding to RUN via Instance 162 or 166.
Network	This bicolor LED is used to indicate the status of the internal network connection.	See Table 34, Network Status Indicator table above for additional information.
Fault	This LED is used to indicate the fault status of the ArmorStart. When the unit is faulted, the unit responds with a specific blink pattern to identify the fault.	See Table 36 and Table 37 below for additional information.

The “Reset Button” is a local trip reset.

Control Module Fault LED Indications

The PrFlt Reset Mode (Parameter 23) determines how a fault is reset. When this parameter is set to the value 0 = manual mode, a local or remote fault reset is needed to reset the fault. When this parameter is set to the value 1 = auto reset, faults are cleared automatically when the fault condition goes away. Referring to Table 37 for the 284, in addition to the “Pr FltReset Mode” the Auto Rstrt Tries (Parameter 192) must be set greater than 0.

NOTE: The “Pr FltReset Mode” parameter takes precedence. Therefore if P23 is set to manual, changing P192 to a value greater than 0 has no effect.

Table 36 - Fault LED Indicators for Bulletin 280E/281E

Blink Pattern	Auto-Resettable	Bulletin 280E/281E Trip Status	Description	Action
1	No	Short Circuit	The circuit breaker (140M) has tripped.	Determine cause of trip. Try to reset the circuit breaker using the disconnect handle. If the conditions continue, check power wiring or replace based module. This cannot be disabled.
2	Yes	Overload	The load has drawn excessive current and based on the trip class that is selected, the device has tripped.	Verify that the load is operating correctly and the ArmorStart is properly set-up. The fault cannot be disabled. If there is an EM brake on the motor check if the brake current is a significant percentage compare to the FLA. Adjust FLA to compensate for the brake current.
3	Yes	Phase Loss	The ArmorStart has detected a missing phase.	Verify that 3-phase voltage is present at the line side connections. This fault can be disabled and is disabled by default.
4	—	Reserved	Not Used	—
5	—	Reserved	Not Used	—

Table 36 - Fault LED Indicators for Bulletin 280E/281E

Blink Pattern	Auto-Resettable	Bulletin 280E/281E Trip Status	Description	Action
6	Yes	Control Pwr Loss (Switched Power)	The ArmorStart has detected a loss of the control power voltage.	Check control voltage, wiring, and proper polarity (A1/A2 terminal). Also, check and replace the control voltage fuse, if necessary. This fault can be disabled and is disabled by default.
7	Yes	Input Fault	This error indicates a shorted sensor, shorted input device, wiring input mistakes, or a blown output fuse.	Correct, isolate, or remove wiring error before restarting the system. This fault can be disabled and is disabled by default.
8	Yes	Over Temperature	This fault is generated when the operating temperature has been exceeded. This fault cannot be disabled.	Check for blocked or dirty heat sink fins. Verify that ambient temperature has not exceeded 40 °C (104 °F). 1. Clear the fault or cycle power to the drive.
9	Yes	Phase Imbalance	The ArmorStart has detected a voltage imbalance.	Check the power system and correct if necessary. This fault can be disabled and is disabled by default.
10	Yes	Control Power (24V DC) Lost (Unswitched Power)	The 24V DC power supply is below tolerance threshold.	Check the state of the network power supply (A3/A1 terminal) and look for media problems. This fault can be disabled and is disabled by default.
11	—	Reserved	Not Used	—
12	—	Reserved	Not Used	—
13	No	EEprom	This is a major fault, that renders the ArmorStart inoperable. Possible causes of this fault are transients that are induced during EEprom storage routines.	If the fault was initiated by a transient, power cycling should clear the problem, otherwise replacement of the ArmorStart may be required. This fault cannot be disabled.
14	No	Hdw Flt	This fault indicates that a serious hardware problem exists.	Check for a base/starter module mismatch. If no mismatch exists, refer to parameter 61 for additional fault detail. The ArmorStart may need to be replaced if the fault persists.(Hdw Flt is the factory-enabled default setting.) This fault cannot be disabled.
15	—	Reserved	Not Used	—
16	—	Reserved	Not Used	—

Table 37 - Fault LED Indicators for 284E

Bit/Blink Pattern	Auto-Resettable ❶	284E Trip Status	Description	Action
1	No	Short Circuit	The circuit breaker (140M) has tripped.	Determine cause of trip. Try to reset the circuit breaker using the disconnect handle. If the conditions continue, check power wiring or replace based module. This cannot be disabled.
2	Drive Controlled	Overload (Drive Codes 7 and 64)	An excessive motor load exists	1. Reduce load so drive output current does not exceed the current set by Parameter 133 (Motor OL Current). 2. Verify Parameter 184 (Boost Select) setting. 3. Drive rating of 150% for 1 minute. 4. Reduce load or extend Accel Time two hundred percent or when 3 seconds has been exceeded.
3	Drive Controlled	Phase Short (Drive Codes 38…43)	1. Phase U, V, or W to Gnd. A phase to ground fault has been detected between the drive and motor in this phase. 2. Phase UV, UW, or VW Short. Excessive current has been detected between these two output terminals.	Check the wiring between the drive and motor. Check motor for grounded phase. Check the motor and drive output terminal wiring for a shorted condition. Replace drive if fault cannot be cleared.
4	Drive Controlled	Ground Fault (Drive Code 13)	A current path to earth ground has been detected at one or more of the drive output terminals.	Check the motor and external wiring to the drive output terminals for a grounded condition.
5	Drive Controlled	Stall (Drive Code 6)	Drive is unable to accelerate motor.	Increase Parameters 139…167 (Accel Time x) or reduce load so drive output current does not exceed the current set by Parameter 189 (Current Limit 1).

Table 37 - Fault LED Indicators for 284E

Bit/Blink Pattern	Auto-Resettable ❶	284E Trip Status	Description	Action
6	Parameter 23 (PrFlt Reset Mode)	Control Pwr Loss (Switched Power)	The ArmorStart has detected a loss of the control power voltage.	Check control voltage, wiring, and proper polarity (A1/A2 terminal). Also, check and replace the control voltage fuse, if necessary. This fault can be disabled and is disabled by default.
7	Parameter 23 (PrFlt Reset Mode)	Input Fault	This error indicates a shorted sensor, shorted input device, wiring input mistakes, or a blown output fuse.	If this fault occurs, the offending problem should be isolated or removed before restarting the system. This fault can be disabled and is disabled by default.
8	Parameter 23 (PrFlt Reset Mode)	Over Temperature	This fault is generated when the operating temperature has been exceeded. This fault cannot be disabled.	Check for blocked or dirty heat sink fins. Verify that ambient temperature has not exceeded 40 °C (104 °F). 1. Clear the fault or cycle power to the drive.
9	Drive Controlled	Over Current (Drive Codes 12 and 63)	The drive output current has exceeded the hardware current limit.	Check programming. Check for excess load, improper Parameter 184 (Boost Select) setting. DC brake volts set too high or other causes of excess current. Parameter 198 (SW Current Trip) has been exceeded, check load requirements and Parameter 198 setting.
10	Parameter 23 (PrFlt Reset Mode)	Control Power (24V DC) Lost (Unswitched Power)	The 24V DC power supply is below tolerance threshold.	Check the state of the network power supply (A3/A1 terminal) and look for media problems. This fault can be disabled and is disabled by default.
11	No	Internal Comm (See Parameter 61 for details on this fault. F81 is a VFD fault. This could also happen if control power is lost.)	Communication with either the control module (VFD) or Control module has stopped.	See section Fault 11 Detail. If the problem persists replace the unit.
12	Drive Controlled	DC Bus Fault (Drive Codes Reference 3, 4 and 5)	Power Loss - DC bus voltage remained below 85% of nominal. UnderVoltage - DC but voltage fell below the minimum value. OverVoltage - DC bus voltage exceeded maximum value.	Monitor the incoming AC line for low voltage or line power interruption. Check the input fuses. Monitor the AC line for high line voltage or transient conditions. Bus overvoltage can also be caused by motor regeneration. Extend the decel time or install dynamic brake option.
13	No	EEprom (PF Drive Code Reference 100)	The checksum read from the board does not match the checksum that is calculated.	Set Parameter 141 (Reset to Defaults) to Option 1 “Reset Defaults”.
14	No	Hdw Flt (PF Drive Codes Reference 70 and 122)	Failure has been detected in the drive power section or drive control and I/O section. See Last Protection Fault parameter 61 for details.	1. Cycle power. 2. If Fan RPM fault, replace the fan. 3. Replace drive if fault cannot be cleared.
15	Drive Controlled	Restart Retries (PF Drive Code Reference 33)	Drive unsuccessfully attempted to reset a fault and resume running for the programmed number of Parameter 192 (Auto Rstrt Tries).	Correct the cause of the fault and manually clear.
16	Drive Controlled	Misc. Fault (PF Drive Code Reference 2, 8, 29, 48 and 80)	Heatsink temperature exceeds a predefined value. The drive was commanded to write default values to EEprom. The autotune function was either cancelled by the user or failed. If DB1 option is installed see P61 for additional diagnostics.	Check for blocked or dirty heat sink fins. Verify that ambient temperature has not exceeded 40 °C (104 °F) and mounted properly. 1. Clear the fault or cycle power to the drive. 2. Program the drive parameters as needed. Restart procedure. 3. Check for DB1 fault and see DB1 diagnostics.

❶ When "Drive Controlled", see Internal Drive Faults see Table 39 for details regarding which drive faults can be auto reset.

Fault 11 Detail

Parameter 61 provides a more granular description of the faults that occur.

- An F11 protection fault indicates that the internal communication has stopped
- There is a 10 second delay before an F11 Internal Comm. fault is present

- Common causes of an Internal Comm. fault:
  - The local ArmorStart Disconnect switch is in the OFF position.
  - 3-Phase line power feeding the ArmorStart is not connected or is turned OFF.
  - Switched Control Power is not connected or is turned OFF.
  - Poor power quality (Brown Out)
- First things to check:
  - Verify that the local disconnect is in the ON position.
  - Verify that the unit has 3-Phase Line Voltage present and it is within specified tolerances.
  - Verify that the ArmorStart unit has Control Voltage present and it is within specified tolerances.
  - Attempt to clear the fault by pressing the local reset or sending the ArmorStart a network reset.
  - Cycle power to the ArmorStart unit and try to clear the fault again.
- If an Internal Comm. fault persists, see Parameter 61 – LastPR Fault for additional details on the last protection fault. See the following table for troubleshooting information that is based on what Parameter 61 returns. Also see Parameters 107...109 to get the VFD fault code that can be referenced below.

Parameter 61 Fault Code	Description	Recommended Action
13 = Control Power Loss	Control power was lost or dipped below the lower threshold long enough to cause the Internal Comm. fault.	• Check that control power is turned on and within specified tolerances. • Check the Control Power fuse, replace if necessary. • Press the local reset or send the unit a network reset once control power is restored.
14 = Control Power Fuse	The control power fuse has blown and the control power circuit no longer is a closed circuit.	• Additional investigation as to why the fuse blew is needed. Take corrective action accordingly. • Replace the fuse and reset the ArmorStart either locally or over the network.
21 = A3 Power Loss	Unswitched (A3/A2) control power was lost or dipped below the lower threshold long enough to cause the Internal Comm. fault. • DeviceNet power loss	• Check that the A3 or DNet power terminal does not have any loose connections. • Press the local reset or send the unit a network reset once the unswitched control power is restored
22 = Internal Comm 24 = Power Loss (3-Phase) 25 = Under Voltage (3-Phase)	• The ArmorStart's MCB lost communications with the VFD. This is most likely due to a loss of 3-phase power. • PF Fault Code 3 or 4	• Check that the local disconnect is in the ON position. • Check for a power quality issue, take appropriate corrective actions. • Check that 3-phase power is present. • Press the local reset or send the unit anetwork reset
23 = Drive Comm Loss (PF Fault Code 81)	The PowerFlex VFD lost communications with the MCB. This is most likely due to a loss of control power or network power.	• Check that control power and the network power are both present. • Press the local reset or send the unit a network reset.
28 = Base EEPROM	The MCB can't read the base module's EEPROM or isn't communicating correctly with the base module. In the EtherNet/IP units, Parameter 63 – Base Trip provides more detail as to why the base module may not be communicating properly with the control module	• Cycle power to the ArmorStart unit. • Verify that the control module is seated correctly in the base module • Check the connector on the control module for bent or broken pins
41 = DB1 Comm	The MCB has lost communications with the Dynamic Brake (DB1) board or the EEPROM on the DB1 board may be corrupt.	• Press the local reset or send the unit a network reset • Cycle power to the ArmorStart unit.

Resetting Device to Factory Defaults

To factory reset the base and control module see parameter 47 “Set to Defaults”. To reset only the VFD in the control module for Bulletin 284 see Parameter 141 “Reset To Defaults”. Both these resets are limited and do not put the product completely in the “out of box” configuration. The Type 1 Reset performs a full product reset to the “out of box” status.

SERVICE CODE 0X05
Class Code 0x0001
INSTANCE 1
Data (USINT) 1

You need to perform a Type 1 Reset if the login and password for the product is lost and forgotten.

WARNING: A Type 1 Reset causes all parameters and web page login to revert to their factory defaults. No user date is saved.

WARNING: A Type 1 Reset should only be executed when necessary or when the login and password must be cleared and set to the factory default setting.

In the following example, Rockwell Automation RSLogix 5000 PLC programming software is used to create a Type 1 Reset. Other tools can be used, provided the class, instance, and attribute values can be sent to the product’s identify object.

1. Within RSLogix 5000, from the File menu, choose New to create a new project. Make sure that the project is offline.
2. If an Add-On-Profile (AOP) window is open, click Cancel to close it at the bottom of the AOP screen.
3. Close any internet browser windows, including Internet Explorer, that are being used to view the ArmorStart web browser.

IMPORTANT For those using an Internet Browser with multiple tabs open, you need to close the entire browser window, not just the tab within the ArmorStart browser.

4. Unplug any inputs and outputs that are connected to the ArmorStart unit.

WARNING: A Type 1 Reset cannot be done if there is an I/O device plugged into the product port. This may cause an unsafe state to occur in the ArmorStart or the environment around the ArmorStart.

5. Create a new Controller Tag of data type DINT and enter a value of 1.
   a. Double click Controller Tags in the Controller Organizer.

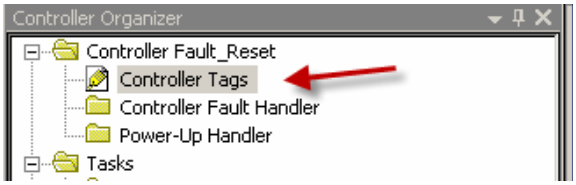

   b. Select Edit Tags at the bottom of the tag list screen.



   c. Create another new tag, the example that is used below is named **Data1.**



   d. To assign Data1 a value of 1, click Monitor Tags tab and enter a 1 in the Value field.



   e. Create a tag for reset input.
      1. Double click Program Tags in the Controller Organizer

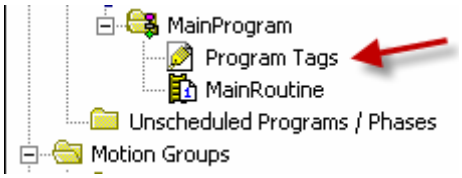

      2. Select Edit Tags at the bottom of the screen and create a tag named Reset of the type BOOL (Boolean).



6. Create a rung in ladder logic for executing the Type 1 Reset.
   a. Add an **XIC Input** and assign it the **BOOL** tag **Reset**.

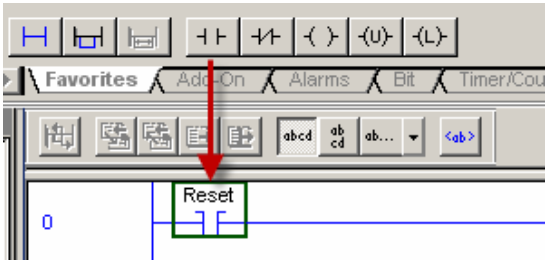

b. Add a Message (MSG) instruction that will be used to execute the reset. The message instruction can be found in the Input/Output instruction set tab.

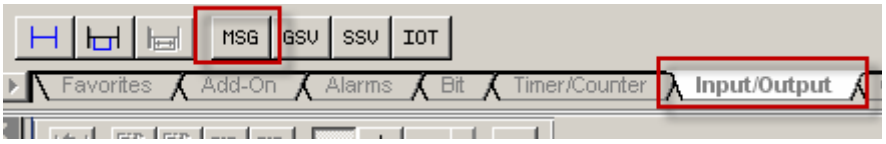

c. The completed rung should look like the one below.

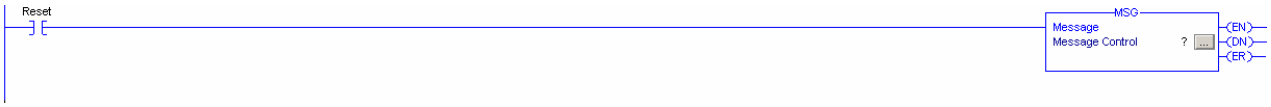

7. Configure the message instruction:

a. Begin by double-clicking the tag name field and entering **AS_Reset**.

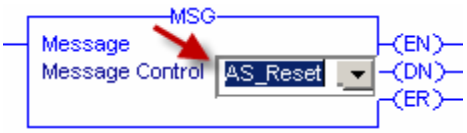

b. Right click AS_Reset and select New "AS_Reset".

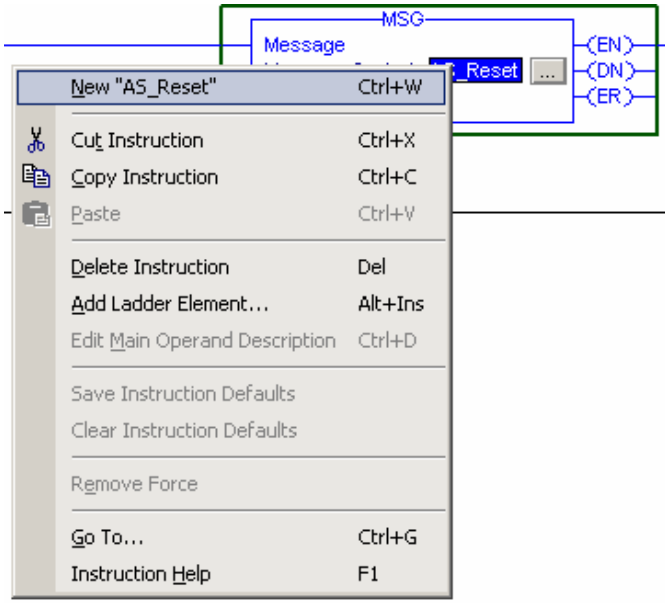

c. Check the tag data type and options with the figure below and click OK.

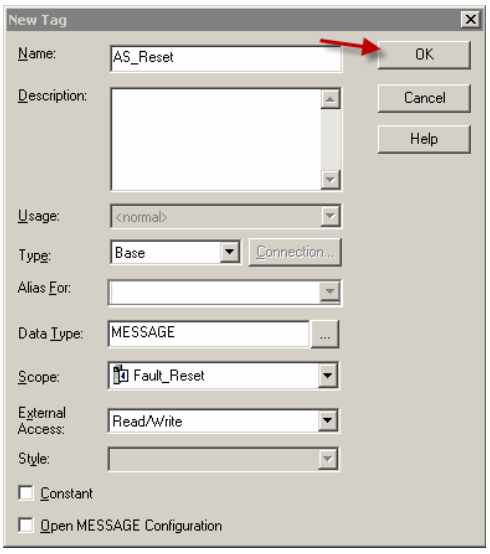

d. Click the box next to AS_Reset to open Configuration Dialog.

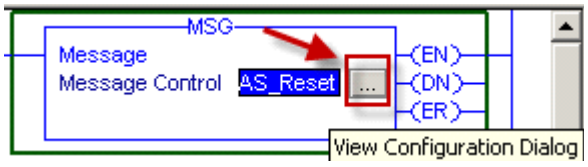

e. From the Message Type pull-down menu, choose CIP Generic.

f. From the Service Type pull-down menu, choose Custom.

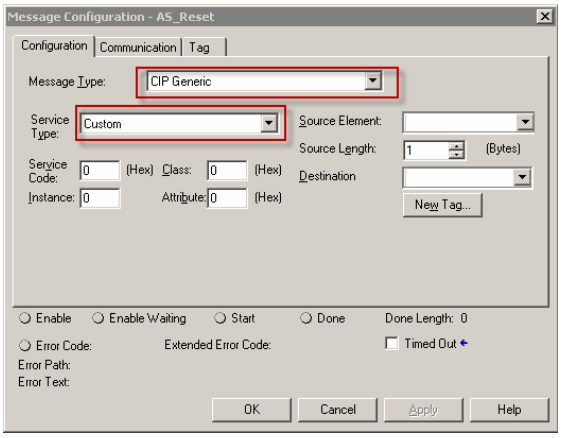

g. From the Source Element pull-down menu, choose Data1 tag that was created earlier and press Enter.

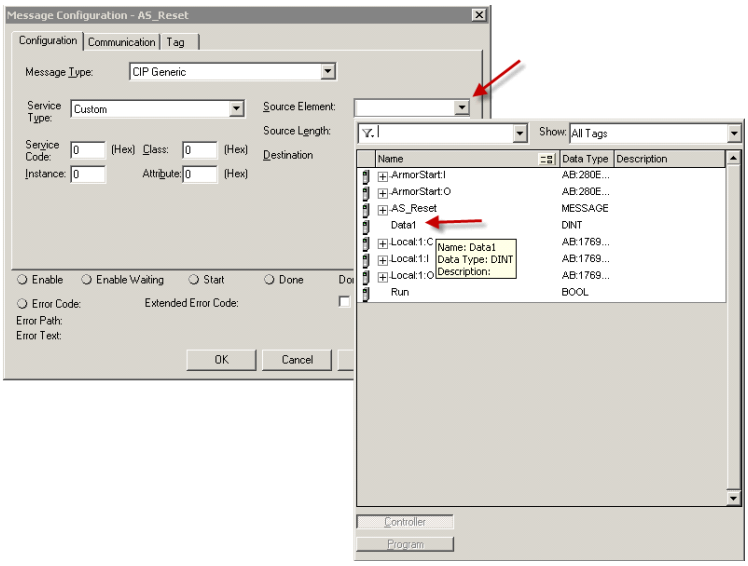

h. Type 5 for the Service Code, 1 for the Class, and 1 for the Instance. Leave the Attribute value at 0. Once you have added these values, the Service Type should automatically change to Device Reset.

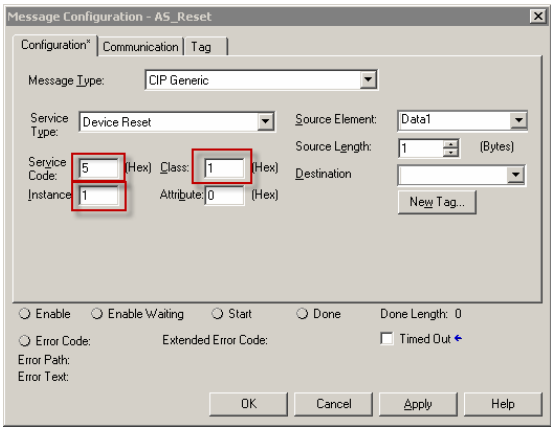

i. Click Communication at the top of the window. Click Browse, select the ArmorStart that is in your project, and click OK. This selects the ArmorStart as the device you are going to send the reset message to.

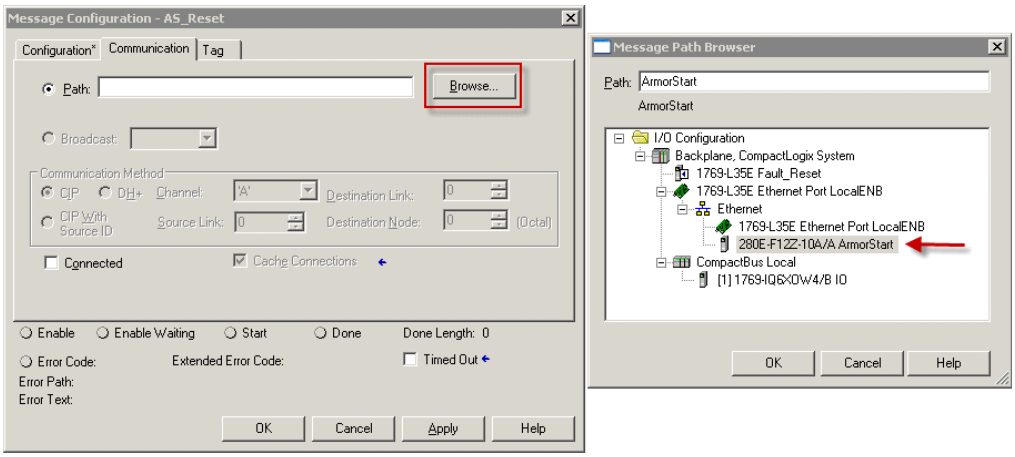

j. You do not need to configure anything in Tag. Click Apply and then OK.

8. Save your project. Download the project to the PLC and go Online.

9. Inhibit the ArmorStart using the AOP:

   a. Once online, open the ArmorStart's AOP and click Connection. Select Inhibit Module from the options.

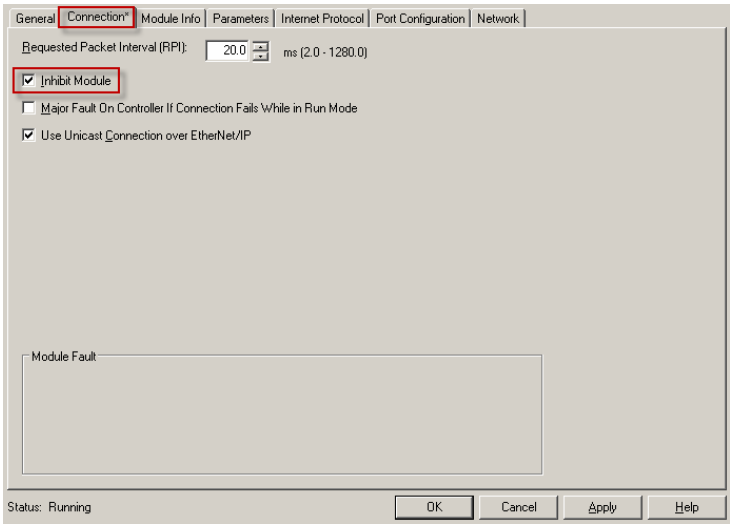

   b. Click Apply. The following screen should pop-up. Click Yes. Click OK to close out the AOP.

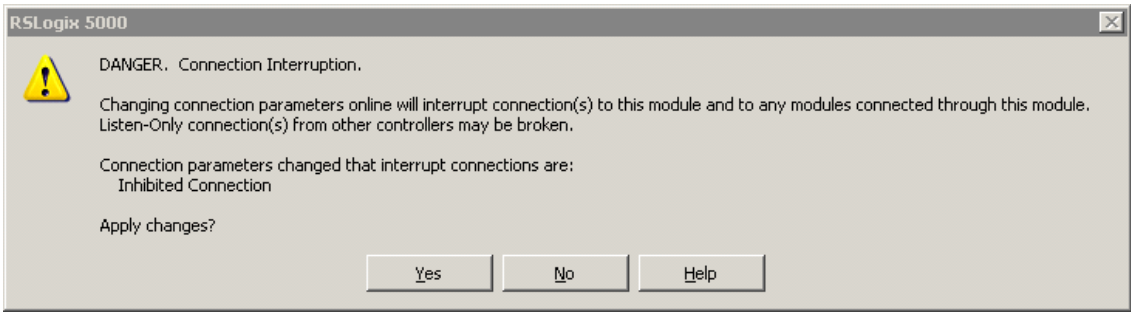

c. You should see the yellow inhibit symbol next to the ArmorStart in the I/O Configuration tree showing that the module is inhibited.

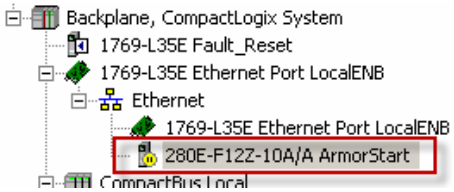

10. Execute the instruction by toggling the Reset input that was created earlier.

a. To energize the bit, left mouse click the input and press CTRL+T. To de-energize the bit, press CTRL+T again.

b. You should see the status LEDs on the ArmorStart display the Reset and Power Cycle sequence. You should also see the Done (DN) bit of the message turn green indicating that the reset was successful.

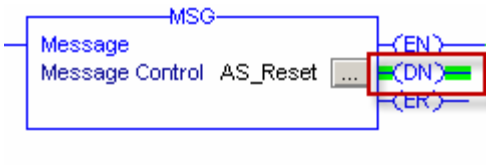

11. Check if the reset works by bringing the ArmorStart's web browser back up and checking that the User Name is Administrator and that there is no set password.

12. Uninhibit the ArmorStart module through the AOP and plug any I/O connections back into the ArmorStart.

Notes:

Troubleshooting

Introduction

The purpose of this chapter is to help with troubleshooting the ArmorStart Distributed Motor Controller by using the LED status display and diagnostic parameters.

ATTENTION: Servicing energized industrial control equipment can be hazardous. Electrical shock, burns, or unintentional actuation of controlled industrial equipment may cause death or serious injury. For safety of maintenance personnel and others who might be exposed to electrical hazards associated with maintenance activities, follow the local safety related work practices (for example, the NFPA70E, Part II in the United States). Maintenance personnel must be trained in the safety practices, procedures, and requirements that pertain to their respective job assignments.

ATTENTION: Do not attempt to defeat or override fault circuits. The cause of the fault indication must be determined and corrected before attempting operation. Failure to correct a control system of mechanical malfunction may result in personal injury and / or equipment damage due to uncontrolled machine system operation.

ATTENTION: The drive contains high voltage capacitors that take time to discharge after removal of mains supply. Before working on the drive, verify the isolation of mains supply from line inputs (R, S, T, [L1, L2, L3]). Wait three minutes for capacitors to discharge to safe voltage levels. Failure to do so may result in personal injury or death.

Darkened display LEDs is not an indication that capacitors have discharged to safe voltage levels.

ATTENTION: Only qualified personnel familiar with adjustable frequency AC drives and associated machinery should plan or implement the installation, startup, and subsequent maintenance of the system. Failure to comply may result in personal injury and/or equipment damage.

ATTENTION: This drive contains electrostatic discharge (ESD) – sensitive parts and assemblies. Static control precautions are required when installing, testing, servicing, or repairing this assembly. Component damage may result if ESD control procedures are not followed. If you are not familiar with static control procedures, see Allen-Bradley Publication 8000-4.5.2, *Guarding against Electrostatic Damage*, or any other applicable ESD protection handbook.

ATTENTION: An incorrectly applied or installed drive can result in component damage or a reduction in product life. Wiring or application errors, such as undersizing of the motor, incorrect or inadequate AC supply, or excessive ambient temperatures may result in malfunction of the system.

Bulletin 280E/281E Troubleshooting

The following flowchart for Bulletin 280E, 281E units is provided to aid in quick troubleshooting.

Figure 90 - Bulletin 280E, 281E Control Module LED Status

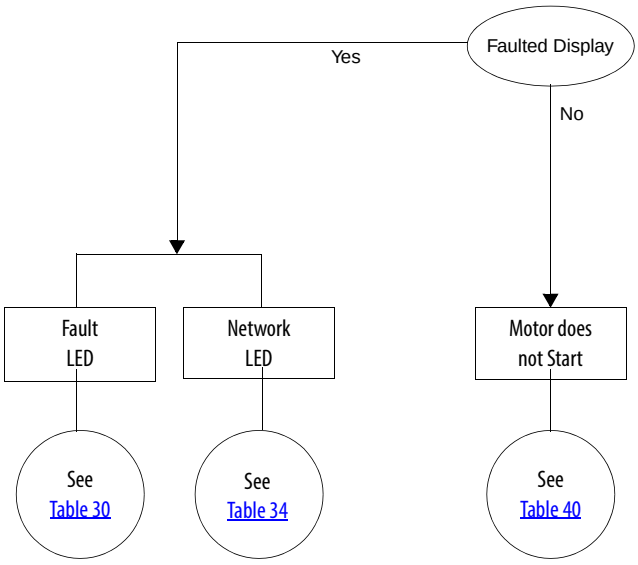

Bulletin 284E Troubleshooting

Fault Definitions

Some of the Bulletin 284E ArmorStart Distributed Motor Controller faults are detected by the internal hardware of the ArmorStart controller, while others are detected by the internal drive. For internal drive faults, the internal hardware of the ArmorStart controller simply polls the drive for the existence of faults and reports the fault state. No fault latching is done by the internal hardware of the ArmorStart controller for these faults. The PrFlt ResetMode parameter (Parameter 23) determines the Auto Resettability of only the faults that are detected on the main control board. The Auto Resettability of the faults that are detected in the internal drive is controlled by internal drive parameters, see Table 38. The following flowchart for Bulletin 284E units is provided to aid in quick troubleshooting.

Figure 91 - Bulletin 284E Control Module LED Status

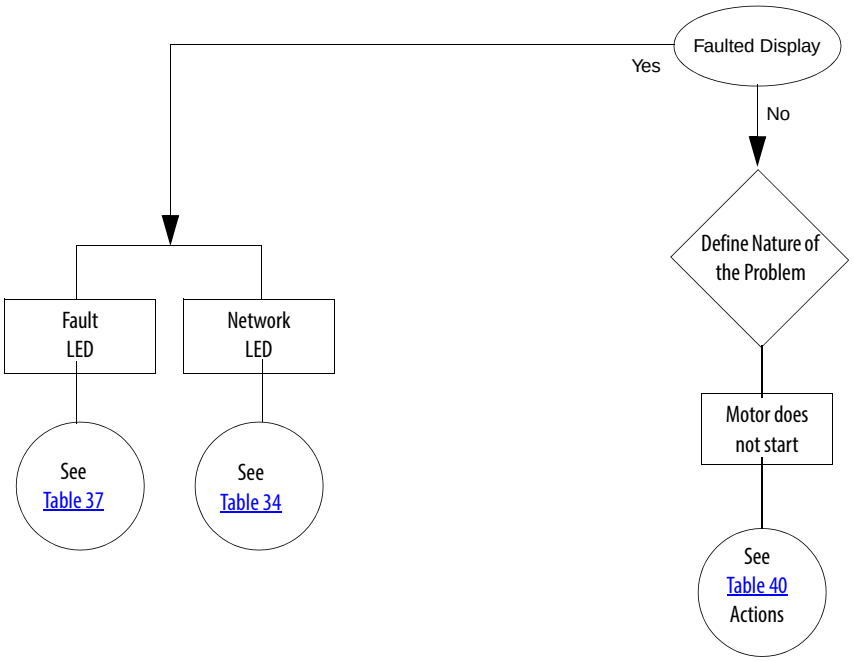

IP67 Dynamic Brake Diagnostic (DB1)

The IP67 operation is different from most other DB resistors. The ArmorStart controller includes specialized function that protects the DB from current faults. This capability is found on an optional monitoring board that is located in the control module of the 284 that is included when the DB1 option is selection.

A DB1 fault is not annunciated until the DB switch in the drive is activated and conducting current.

The following conditions are monitored:

- DB Overcurrent resistor value too small (current is too high)
- DB Undercurrent resistor value is too high (current is too low)
- DB Open drive bus voltage is above DB level, but no resistor current was measured

The following conditions cause a fault anytime the DB1 active:

- DB Shorted Switch - detected current when Drive bus voltage is below the DB threshold
- DB Overtemp - DB resistor is too hot
- DB Bus Voltage Link Open - Bus voltage from the drive is not measured for two seconds. Occurs if the internal connection between the main control and the DB1 module has an issue

DB1 Faults

Operation and Troubleshooting of the DB1 - Dynamic Brake

Eight types of DB1 faults are detected and reported in Parameter 61 as either a "DB1 Flt", "DB1 Comm Fault" or DB1 Switch Short". DB1 faults are also reported in Attribute 158 "DB1 Fault" of the Control Supervisor Object (Class Code: 29 Hex). See Appendix B for Control Supervisor information.

If the ArmorStart Fault LED blinks 11x's check parameter 61. If value is 41, check the following:

- DB1 Comm Fault - Communication loss exists between the Dynamic Brake board and the main control board.

This is also enunciated in the Trip Status parameter 4 bit 10 called Internal Comm fault.

If the ArmorStart Fault LED blinks 16x's check parameter 61. If value is 42 (DB1 Fault), check the following:

- DB1 Resistor Overtemperature Fault
- DB1 Overcurrent Fault
- DB1 Undercurrent Fault
- DB1 Open Fault
- DB1 VBus Link Fault

This is also enunciated in the Trip Status parameter 4-bit 15 called Miscellaneous Fault.

If the ArmorStart Fault LED blinks 16x's check parameter 61. If value is 43, check the following:

- DB1 Switch Fault

The DB1 option provides the following warning:

- DB1 Thermal Warning - occurs once the resistor reaches 75% of maximum thermocapacity. Once at 100% a DB1 over temperature occurs resulting in a DB1 over temperature fault.

DB1 Resistor Overtemperature Fault

Control Supervisor Object "DB1 Fault" Attribute Bit 0.

The DB1 measures current continuously, and models resistor body temperature that is based on measured current and resistor model parameters. The DB1 not only calculates the present resistor body temperature, but also predicts the future resistor body temperature. The resistor overtemperature level is based on the predicted future resistor body temperature, not on the present resistor body temperature. This fault is disabled when Parameter 182 (DB1 Resistor Sel) is "Disabled".

Troubleshooting – DB1 Resistor body temperature is too hot. Allow the resistor to cool.

DB1 Overcurrent Fault

Control Supervisor Object "DB1 Fault" Attribute Bit 1.

The DB1 compares each current measurement against the Max Current Level. If 5 consecutive samples are above the Max Current Level, then a fault is recorded. This fault is intended to notify the user if the DB1 resistance is lower than expected. This fault is disabled when Parameter 182 (DB1 Resistor Sel) is "Disabled".

Troubleshooting – DB1 monitor has measured a DB1 current higher than expected. Turn off all power to unit. Allow at least 3 minutes for capacitors to discharge.



BURN HAZARD: DB1 resistor may still be hot.

Disconnect DB1 resistor from ArmorStart control module. Measure DB1 resistor value at the connector with an ohmmeter. See the specification for minimum DB1 resistor values. If DB1 resistance value is within limits, replace control module. If not, replace DB1 resistor.

DB1 Undercurrent Fault

Control Supervisor Object "DB1 Fault" Attribute Bit 2.

The DB1 compares each current measurement against the Min Current Level. The Min Current Level = Min DB1 Voltage Level/Max DB1 Resistance. If 5 consecutive samples are below the Min Current Level and the DB1 is ON, then a fault is recorded. This fault is intended to notify the user if the DB1 resistance is higher than expected. This fault is disabled when Parameter 182 (DB1 Resistor Sel) is "Disabled".

Troubleshooting – DB1 monitor has measured a DB1 current lower than expected. Turn off all power to unit. Allow at least 3 minutes for capacitors to discharge.



BURN HAZARD: DB1 resistor may still be hot.

Disconnect DB1 resistor from ArmorStart control module. Measure DB1 resistor value at the connector with an ohmmeter. See the specification for minimum DB1 resistor values. If DB1 resistance value is within limits, replace control module. If not, replace DB1 resistor.

DB1 Switch Fault

Control Supervisor Object "DB1 Fault" Attribute Bit 3.

A DB1 Switch fault is issued when continuous DB1 resistor current is detected when the Drive Bus Voltage level is less than the DB1 Voltage Level. If 5 consecutive samples of Drive Bus Voltage less than DB1 Level is detected along with continuous DB1 resistor current flow, then a shorted DB1 IGBT fault (DB1 Switch) is recorded.

It is the user's responsibility to provide an input power contactor to each ArmorStart with a drive. The user must write logic to control (open) the input contactor to the ArmorStart in the event of a DB1 Switch Fault. The Instruction Literature provides information on how to connect the input contactor, and how to implement the logic.

Troubleshooting – Attempt to reset the fault by removing all power to the unit and restarting. If the fault persists, replace control module.

DB1 Open Fault

Control Supervisor Object "DB1 Fault" Attribute Bit 4.

A DB1 Open fault is issued when Bus Voltage is greater than the DB1 Voltage Level, and no DB1 resistor current has been detected. If 5 consecutive samples of Drive Bus Voltage greater than the DB1 Level is detected along with no DB1 resistor current flow, then an open DB1 fault is recorded. This fault is intended to notify the customer of an open DB1 resistor, or open wire. The fault is disabled when the DB1 Resistor Sel, Parameter (182) is "Disabled".

Troubleshooting – DB1 monitor expected to see current flow and measured none. Likely cause is an open DB1 resistor, loose DB1 resistor connector, or open wire in DB1 cable. Check DB1 cable connector for tightness. If problem persists, remove DB1 resistor cable connector from unit and check DB1 resistance. If DB1 resistor is open, replace DB1 resistor. Otherwise replace control module.

DB1 VBus Link Fault

Control Supervisor Object "DB1 Fault" Attribute Bit 6.

For proper operation, the DB1 monitors parameters from the Drive internally inside the ArmorStart. If the internal communications to the drive is lost, then this fault is issued. Since the DB1 can no longer provide resistor protection, the user must implement logic to open the input contactor.

Troubleshooting – Verify that 3-phase line power and control power is applied to unit. Attempt to reset fault. If fault persists, replace control module.

DB1 Comm Fault

Control Supervisor Object "DB1 Fault" Attribute Bit 8.

The communications link is monitored continuously. If the DB1 stops responding, then the MCB issues this fault. Since the DB1 can no longer provide resistor protection, the user must implement logic to open the input contactor.

Troubleshooting – Replace control module.

DB1 Thermal Warning

Control Supervisor Object "DB1 Status" Attribute Bit 1.

A DB1 Thermal Warning is issued if the predicted future resistor body temperature is greater than the Max DB1 resistor temperature x DB1 Thermal Warning Percent.

Troubleshooting – None. DB1 resistor thermal value has exceeded the preset threshold of 90% of thermal value.

Reading the Control Supervisor Object

If a DB1 fault occurs the Control Supervisor Object provides the detailed information specific to the fault. Create an Explicit Message Instruction such as Class = 0029hex, Instance = 0001hex, Attribute = 158. A bit enumerated WORD of information is returned. See the CIP section for details.

Hardware Fault - Fan RPM Warning

FAN Fault Handling with Firmware 66.21 of 284

The Fan Fault handler was modified in firmware 66.21 of the 284.

Operation

If the RPM of the internal fan drops below the minimum threshold a Warning bit in Stater Status, Parameter 5 will be set and the Warning Status, Parameter 62 Bit 13 hardware warning will be set. A 24 hour count down timer begins. If the warning flag is set continuously for the 24 hr period and time expires a F14 (LED Flashes 14 times) Hardware fault occurs. Also Last Pr Fault, Parameter 61 shows Fan RPM fault. If within the 24 hr period the fan rpm climbs above the minimum threshold the warning flags will be removed and timer reset and turned off.

Starter Status, Warning Bit 5:

When set to "1" indicates a Warning if a Fan RPM issue occurs. The warning bit can also be triggered by other warning type faults that are found in parameter 62.

Warning Status, Parameter 62:

Bit 13 turns to a "1" indicating a Hardware warning. Hardware warning is an OR of two warnings.

Annunciation using PLC Logic

To determine when only a Fan RPM warning occurs, logic must be written that triggers a CIP message. The DPI Alarm Object Class Code 0x0098 provides a structure of data that includes the fault code of Fan RPM (31). Create a program that monitors the Starter Status Warning bit and Warning Status Hardware bit. When they are both set to "1" the PLC code should generate a Get Single explicit message of Class 0x0098, Instance 1, and Attribute 1.

This message returns a structure of the following data:

— —Alarm Code UINT <----------

— —Alarm Source Struct of:

— — — DPI Port Number USINT

— — — Device Object Instance USINT

— —Alarm Time Stamp Struct of:

— — — Timer Value ULINT

— — — Timer Descriptor WORD

When Alarm Code UINT = 31 (decimal) this is a FAN RPM warning. For a full list of fault code references see parameter 61.

When the fault occurs the following Trip bits are activated:

- Parameter 4, Trip Status, bit 13 turns to a "1" indicating a hardware trip has occurred
- Parameter 5, Starter Status, bit 0 turns to a "1" indicating a TripPresent
- Parameter 61 displays "Fan RPM" Fault 31 as the last protection fault.

Internal Drive Faults

A fault is a condition that stops the drive. There are two fault types.

Table 38 - Internal Drive Faults

Type	Name	Description
1	Auto-Reset/Run	When this type of fault occurs, Parameter 192 (Auto Rstrt Tries) and related Parameter(s): 155 (Relay Out Sel), 193 (Auto Rstrt Delay) are set to a value greater than 0, a user-configurable timer, Parameter 193 (Auto Rstrt Delay) and related Parameter: 192 (Auto Rstrt Tries), begins. When the timer reaches zero, the drive attempts to automatically reset the fault. If the condition that caused the fault is no longer present, the fault will be reset and the drive will be restarted
2	Non-Resettable	This type of fault may require drive or motor repair, or is caused by wiring or programing errors. The cause of the fault must be corrected before the fault can be cleared.

Automatically Clearing Faults (Option/Step)

Clear a Type 1 Fault and Restart the Drive:

1. Set Parameter 192 (Auto Rstrt Tries) to a value other than 0.
2. Set Parameter 193 (Auto Rstrt Delay) to a value other than 0.

Clear an Overvoltage, Undervoltage or Heatsink OvrTmp Fault without Restarting the Drive:

1. Set Parameter 192 (Auto Rstrt Tries) to a value other than 0.
2. Set Parameter 193 (Auto Rstrt Delay) to 0.

Auto Restart (Reset/Run)

The Auto Restart feature provides the ability for the drive to automatically perform a fault reset followed by a start attempt without user or application intervention. This allows remote or unattended operation. Only certain faults are allowed to be reset. Certain faults (Type 2) that indicate possible drive component malfunction cannot be reset. Caution should be used when enabling this feature, since the drive will attempt to issue its own start command that is based on user selected programming.

The following table describes Bulletin 284E Faults as seen in Parameters 107, 108, and 109 (Fault 1, 2, or 3).

Table 39 - Bulletin 284E Faults – Parameters 107, 108, and 109 (Fault 1, 2 or 3)

No.	Fault	Type ❶	Description	Action
F2	Auxiliary Input	1	Auxiliary input interlock is open.	1. Check remote wiring. 2. Check communications.
F3	Power Loss	2	DC bus voltage remained below 85% of nominal.	1. Monitor the incoming AC line for low voltage or line power interruption. 2. Check input fuses.
F4	UnderVoltage	1	DC bus voltage fell below the minimum value.	1. Monitor the incoming AC line for low voltage or line power interruption.
F5	OverVoltage	1	DC bus voltage exceeded maximum value.	1. Monitor the AC line for high line voltage or transient conditions. Bus overvoltage can also be caused by motor regeneration. Extend the decel time or install dynamic brake option.
F6	Motor Stalled	1	Drive is unable to accelerate motor.	1. Increase Parameters 139 or 167 (Accel Time x) or reduce load so drive output current does not exceed the current set by Parameter 189 (Current Limit 1).
F7	Motor Overload	1	Internal electronic overload trip	1. An excessive motor load exists. Reduce load so drive output current does not exceed the current set by Parameter 133 (Motor OL Current). 2. Verify Parameter 184 (Boost Select) setting
F8	Heatsink OvrTmp	1	Heatsink temperature exceeds a predefined value.	1. Check for blocked or dirty heat sink fins. Verify that ambient temperature has not exceeded 40°C. 2. Replace internal fan.
F12	HW OverCurrent	2	The drive output current has exceeded the hardware current limit.	1. Check programming. Check for excess load, improper programming of Parameter 184 (Boost Select), DC brake volts set too high, or other causes of excess current.
F13	Ground Fault	2	A current path to earth ground has been detected at one or more of the drive output terminals.	1. Check the motor and external wiring to the drive output terminals for a grounded condition.
F33	Auto Rstrt Tries		Drive unsuccessfully attempted to reset a fault and resume running for the programmed number of Parameter 192 (Auto Rstrt Tries).	1. Correct the cause of the fault and manually clear.
F38 F39 F40	Phase U to Gnd Phase V to Gnd Phase W to Gnd	2	A phase to ground fault has been detected between the drive and motor in this phase.	1. Check the wiring between the drive and motor. 2. Check motor for grounded phase. 3. Replace starter module if fault cannot be cleared.
F41 F42 F43	Phase UV Short Phase UW Short Phase VW Short	2	Excessive current has been detected between these two output terminals.	1. Check the motor and drive output terminal wiring for a shorted condition. 2. Replace starter module if fault cannot be cleared.
F48	Params Defaulted	2	The drive was commanded to write default values to EEPROM.	1. Clear the fault or cycle power to the drive. 2. Program the drive parameters as needed.
F63	SW OverCurrent	2	Programmed Parameter 198 (SW Current Trip) has been exceeded.	1. Check load requirements and Parameter 198 (SW Current Trip) setting.

Table 39 - Bulletin 284E Faults – Parameters 107, 108, and 109 (Fault 1, 2 or 3)

No.	Fault	Type ❶	Description	Action
F64	Drive Overload	2	Drive rating of 150% for 1 min or 200% for 3 s has been exceeded.	1. Reduce load or extend Accel Time.
F70	Power Unit	2	Failure has been detected in the drive power section.	1. Cycle power. 2. Replace starter module if fault cannot be cleared.
F80	SVC Autotune		The autotune function was either cancelled by the user or failed.	1. Restart procedure.
F81	Comm Loss	2	RS485 (DSI) port stopped communicating.	1. Turn off using Parameter 205 (Comm Loss Action). 2. Replace starter module if fault cannot be cleared.
F100	Parameter Checksum	2	The checksum read from the board does not match the checksum calculated.	1. Set Parameter 141 (Reset To Defaults) to Option 1 (Reset Defaults).
F122	I/O Board Fail	2	Failure has been detected in the drive control and I/O section.	1. Cycle power. 2. Replace starter module if fault cannot be cleared.

❶ See Table 38 for Type description.

Table 40 - Motor Does Not Start

Cause(s)	Indication	Corrective Action
No output voltage to the motor.	None	Check the power circuit. • Check the supply voltage. • Check all fuses and disconnects Check the motor. • Check that the motor is connected properly. • Check that I/O Terminal 01 is active. • Check that Parameter 136 (Start Source) matches your configuration. • Check that Parameter 195 (Reverse Disable) is not prohibiting movement. • Run Autotune parameter 227
Drive is Faulted	Flashing red status light	Clear fault. • Press Stop • Cycle power • Set Parameter 200 (Fault Clear) to Option 1 (Clear Faults). • Cycle digital input is Parameters 151…154 (Digital In x Sel) is set to Option 7, (Clear Faults).

Table 41 - Drive Does Not Respond to Changes in Speed Command

Cause(s)	Indication	Corrective Action
No value is coming form the source of the command.	The drive **Run** indicator is lit and output is 0 Hz.	• Check Parameter 112 (Control Source) for correct source. • If the source is an analog input, check wiring and use a meter to check for presence of signal. • Check Parameter 102 (Commanded Freq) to verify correct command.
Incorrect reference source is being selected via remote device or digital inputs.	None	• Check Parameter 112 (Control Source) for correct source. • Check Parameter 114 (Dig In Status) to see if inputs are selecting an alternate source. Verify settings for Parameters 151…154 (Digital In x Sel). • Check Parameter 138 (Speed Reference) for the source of the speed reference. Reprogram as necessary.
Some applications create an intermittent voltage regeneration condition and the bus regulator tries to compensate.	None	• Disable parameter 217 Bus Regulation. The drive will react faster to changes in speed. • This could also cause DC bus voltage faults if an external resistor is not attached.

Table 42 - Motor and/or Drive Does Not Accelerate to Commanded Speed

Cause(s)	Indication	Corrective Action
Acceleration time is excessive.	None	• Reprogram Parameter 139 (Accel Time 1) or Parameter 167 (Accel Time 2). • Try changing parameter 184 Boost selection to a value of 5 to 14, starting with 5.
Excess load or short acceleration times force the drive into current limit, slowing, or stopping acceleration.	None	• Compare Parameter 103 (Output Current) with Parameter 189 (Current Limit1). • Remove excess load or reprogram Parameter 139 (Accel Time 1) or Parameter 167 (Accel Time 2). • Check for improper setting of Parameter 184 (Boost Select).
Speed command source or value is not as expected.	None	• Verify Parameter 102 (Commanded Freq). • Check Parameter 112 (Control Source) for the proper Speed Command.
Programming is preventing the drive output from exceeding limiting values.	None	Check Parameter 135 (Maximum Freq) to insure that speed is not limited by programming.
Torque performance does not match motor characteristics.	None	• Set motor nameplate full load amps in Parameter 226 (Motor NP FLA). • Use Parameter 227 (Autotune) to perform **Static Tune** or **Rotate Tune** procedure. • Set Parameter 225 (Torque Perf Mode) to Option 0 (V/Hz).

Table 43 - Motor Operation is Unstable

Cause(s)	Indication	Corrective Action
Motor data was incorrectly entered.	None	1. Correctly enter motor nameplate data into Parameters 131, 132, and 133. 2. Enable Parameter 197 (Compensation). 3. Use Parameter 184 (Boost Select) to reduce boost level.

Table 44 - Drive Does Not Reverse Motor Direction

Cause(s)	Indication	Corrective Action
Digital input is not selected for reversing control.	None	Check Parameters 151…154 (Digital In x Sel). Choose correct input and program for reversing mode.
Motor wiring is improperly phased for reverse.	None	Switch two motor leads.
Reverse is disabled.	None	Check Parameter 195 (Reverse Disable).

Table 45 - Drive Does Not Power Up

Cause(s)	Indication	Corrective Action
No input power to drive.	None	Check the power circuit. • Check the supply voltage. • Check all fuses and disconnects.
Jumper between I/O Terminals P2 and P1 not installed and/or DC Bus Inductor not connected.	None	Install jumper or connect DC Bus Inductor.

Ethernet Statistics

The EtherNet/IP communication module may experience intermittent network connectivity due to these conditions:

- Duplex mismatch
- Electrical noise that is induced into a cable or resulting from a Logix/ switch ground potential difference
- Bad hardware, such as a cable or switch part

Troubleshoot and General Solutions for Linear or DLR Networks

Before attempting to correct specific faults on the linear or DLR network, it is recommended to first take the following actions when a fault appears.

- **For a DLR network** check that**:**
  - At least one node is configured as a supervisor on the network and that Network Topology = Ring.
  - All cables on the network are securely connected to each device.
  - All devices that require an IP address have one assigned correctly.
  - The Network Status field on the active supervisor node's status page to determine the fault type.
- **For a linear network** check that**:**
  - None of the nodes are configured as a supervisor on the network and that Network Topology = Linear.
    If any nodes on a linear network are configured as a supervisor, it may impact communication to other devices connected to the network.
  - All cables on the network are securely connected to each device.
  - All devices that require an IP address have one assigned correctly.

If the fault is not cleared after completing the actions listed above, use the tables in the rest of this chapter to troubleshoot issues specific to a DLR network or a linear network.

Specific Issues on Your DLR or Linear Network

Use the following table to troubleshoot possible specific issues on your DLR or linear network that are not solved by the actions that are described above.

Table 46 - Troubleshoot DLR or Linear Network

Issue	Description	Solution
	A link on the DLR network may be broken: • Intentionally, for example, because you are adding or deleting nodes but have not made all physical connections to restore the set up of the network with/without the node. • Unintentionally, for example, because a cable is broken or a device malfunctions. When this fault occurs, the adjacent nodes to the faulted part of the network are displayed in the Ring Fault group and the Network Status field = Ring Fault. The screen shot below shows the Ring Fault section with IP addresses appearing for the last active nodes. The faulted node is between nodes 10.88.80.115 and 10.88.80.208. If the IP address of either node is not available, the software will display the node's MAC ID. **Figure 92 - Ring Fault Section** 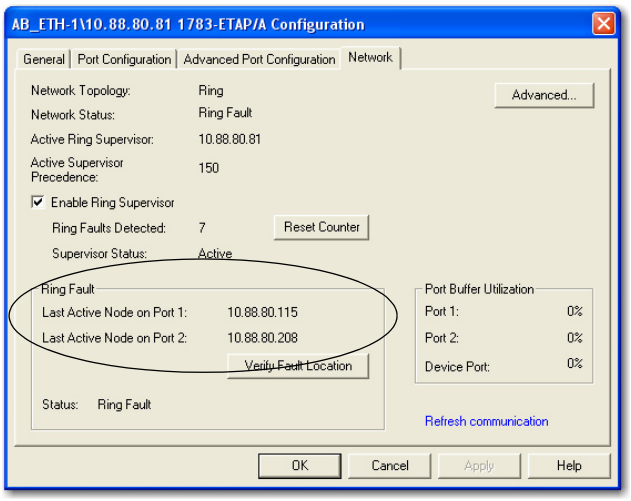 	Determine where the fault condition exists and correct it. It may be necessary to click the Refresh Communication link to update the Ring Fault information to determine where the fault condition exists.
Supervisor Reports a Ring Fault	Once the fault is corrected, the ring is automatically restored, and the Network Status field returns to Normal.	

Table 46 - Troubleshoot DLR or Linear Network

Issue	Description	Solution
Rapid Ring Fault	When a Rapid Ring Fault occurs, the following events occur: • The active supervisor blocks traffic on port 2, resulting in possible network segmentation, that is, some nodes may become unreachable. • The Link 2 status indicator on the active supervisor is off. • As soon as the fault occurs, for both RSLogix 5000 programming software and RSLinx communication software, the Status field = Rapid Fault/Restore Cycles. **Figure 93 - Rapid Fault/Restore Cycles Status** 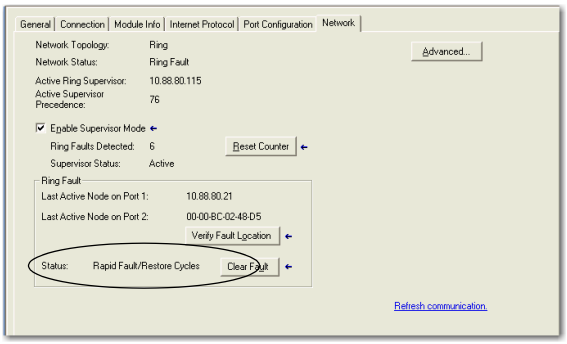 Any of the following may cause a Rapid Ring Fault: • Five intentional disconnections/reconnections of a node from the network within 30 s • A duplex mismatch between two connected devices • Electromagnetic noise on the network • Unstable physical connections, such as intermittent connectors Given the nature of a Rapid Ring Fault, the Last Active Node information may not be accurate when a Rapid Ring Fault condition is present	Multiple possible solutions exist. • For the disconnections and reconnections issue, no solution is required. Clear the fault when you have reconnected the device to the network permanently. • For the duplex mismatch issue, reconfigure the duplex parameters to verify that they match between the devices. • For the electromagnetic noise issue, determine where the noise exists and eliminate it or use a protective shield in that location. • For the unstable connections issue, determine where they exist on the network and correct them. • Check the media counters for all devices on the network. The device with the highest media counter count is most likely causing the Rapid Ring Fault. • Remove devices from the network one by one. When you see the Rapid Ring Fault disappear after a device is removed, that device is causing the fault. • Finally, your Beacon Interval or Timeout configuration may not be appropriate for your network. However, if you think it is necessary to change these values, we recommend that you call Rockwell Automation technical support. Once the fault is fixed, click Clear Fault.
Partial Fault Condition	A partial network fault occurs when traffic is lost in only one direction on the network because a ring member is not forwarding beacons in both directions for some reason, such as because of a component failure. The active ring supervisor detects a partial fault by monitoring the loss of Beacon frames on one port and the fault location appears in the Ring Fault section of the Network tab. When a partial fault is detected, the active ring supervisor blocks traffic on one port. At this point, the ring is segmented due to the partial fault condition. The nodes adjacent to the faulted part of the network are displayed in the Ring Fault group with either IP addresses or MAC ID's for each node displayed. When this fault occurs the Network Status field = Partial Fault Condition. Once the fault is corrected, it automatically clears, and the Network Status field returns to Normal.	Determine where the fault condition exists and correct it.

Table 46 - Troubleshoot DLR or Linear Network

Issue	Description	Solution
Media Counter Errors or Collisions	The media counters screen displays the number of physical layer errors or collisions. The screen below indicates where to check for errors that are encountered. Error levels are displayed depending on what caused the error. For example, an Alignment Error is displayed in the Alignment Error field. **Figure 94 - Media Counter Screen** 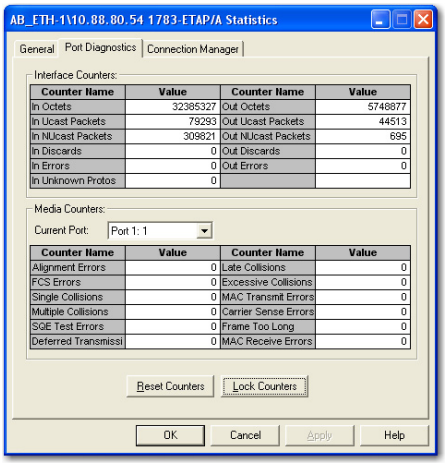 On a DLR network, it is not uncommon to see low levels of media counter errors. For example, if the network breaks, a low level of media counter errors appear. With a low level of media counter errors, the value typically does not continuously increase and often clears. A high level of media counter errors typically continues to increase and does not clear. For example, there is a mismatch of speed between two linked nodes, a high level of media counter errors appears, steadily increasing and not clearing. To access the RSLinx screen above, browse the network, right-click the device, select Module Properties and click Port Diagnostics.	Some example solutions include: • Check for a mismatch of speed and/or duplex between two linked nodes. • Check that all cables on the network are securely connected to each device. • Check for electromagnetic noise on the network. If you find it, eliminate it or use a protective shield in that location.

Table 47 - Media Counter Errors

Media Counter	Definition
Alignment Errors	A frame containing bits that do not total an integral multiple of eight. Alignment errors often result from: • Starting or stopping of a module. • MAC-layer packet formation problems. • Cabling problems that corrupt or eliminate data. • Packets passing through more than two cascaded multi-port transceivers.
FCS Errors	A frame containing 8 bits, at least one of which has been corrupted. Frame Check Sequence (FCS) errors often result from: • Starting or stopping of a module. • Cabling problems that corrupt or eliminate data. **Important:** Even though the acceptable Ethernet bit-error rate is 1 in 108, the typical rate is 1 in 1012 or better.
Single Collisions	The number of outgoing packets that encountered only one collision during transmission.
Multiple Collisions	The number of outgoing packets that encountered 2...15 collisions during transmission.
SQE Test Errors	A test to detect the collision-present circuit between a transceiver and a network interface card (NIC). **Important:** Because most NICs now have an integrated transceiver, the SQE test is unnecessary. Ignore this media counter.
Deferred Transmissions	The number of outgoing packets whose transmission is deferred because the network is busy when the first attempt is made to send them. **Important:** The module only defers the first attempt to transmit a packet. After the first attempt, the module transmits the packet without checking. However, if the network is still busy, a collision will be recorded.

Media Counter	Definition
Late Collisions	The number of times two devices transmit data simultaneously. Neither device detects a collision because the time it takes to send the signal from one end of the network to the other exceeds the time that is needed to put the entire packet on the network. Consequently, neither device senses the other's transmission until the entire packet is out on the network. Late collisions often result from these conditions: • Excessive network segment length • Repeaters between devices **Important:** Large and small packets can be affected by late collisions. However, the transmitter cannot detect late collisions between small packets. Consequently, a network that experiences measurable late collisions between large packets also loses small packets.
Excessive Collisions	The number of frames that experience 16 consecutive collisions.
MAC Transmit Errors	The number of frames for which transmission via a particular interface fails due to an internal MAC sub-layer transmission error. **Important:** MAC transmit errors are only counted if either late collisions, excessive collisions, or carrier sense errors are not counted.
MAC Receive Errors	The number of frames for which reception via a particular interface fails due to an internal MAC sub-layer transmission error. **Important:** MAC receive errors are only counted if the frame too long count, alignment errors, or FCS errors are not counted.
Carrier Sense Errors	Carrier sense errors fall into these categories: • No Carrier Sense Present - The number of times the carrier is not present when a transmission starts. • Carrier Sense Lost - The number of times the carrier is lost during a transmission. Carrier sense errors usually indicate a problem with a cable on the Ethernet infrastructure.
Frame Too Long	The number of incoming packets that exceed the maximum Ethernet packet size.

Troubleshoot Intermittent Ethernet Connectivity

To troubleshoot intermittent ethernet connectivity, follow these steps.

1. From the ArmorStart EtherNet/IP and/or the ControlLogix EtherNet/IP bridge, click Ethernet Statistics.

Figure 95 - Ethernet Statistics

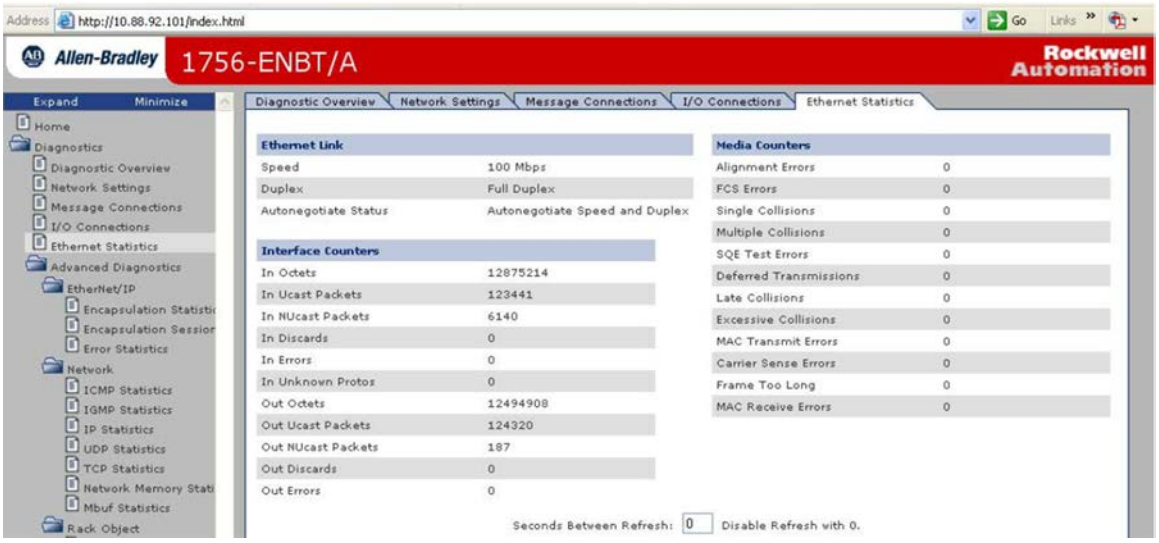

2. Review the values in the Media Counters table.

If	Then
Any media counters are greater than zero	You need to investigate further.
These errors are counted: • Alignment • FCS • Carrier Sense	A duplex mismatch exists between your EtherNet/IP communication module and the switch port. To clear the duplex mismatch: 1. Configure the EtherNet/IP communication module and the corresponding Ethernet switch port for a forced operation, not auto-negotiation. 2. Verify that the firmware revision of your Logix controller and switch, or converter are identical. 3. If the revisions are not identical, replace the controller, switch, or converter so that they match.
Single Collisions or Multiple Collisions are greater than zero	No action is required. **Important:** If two stations attempt to transmit data simultaneously, the packets collide with each other. However, collisions are not errors and do not indicate a network problem. The number of network collisions can vary greatly due to traffic patterns or CPU utilization. Consequently, there is no set range of acceptable collisions for each outgoing packet. Collisions are a normal aspect of Ethernet networking.
Late Collisions are greater than zero	1. Check to see if a network segment is too long. 2. Remove repeaters from between devices.
Excessive Collisions are greater than zero	Calculate your network's typical rate of excessive collisions and decide whether the rate of packet loss will affect your network's performance. **Important:** Excessive collisions indicate that your network has become congested. For each collision after the sixteenth, your network drops a packet.
MAC Transit Errors are greater than zero	No action is required.
Frame Too Long is greater than zero	Limit the size of your tags to ≤ 500 bytes.

Ethernet Statistics

The Ethernet Statistics web page presents the current configuration of an EtherNet/IP communication module and any errors that have occurred on the module.

1. Review the values in the Ethernet Port 1 table.

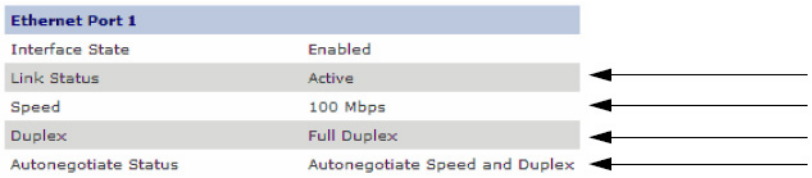

If		And you	Then
Link Status is	Active	Do not want to change the status	No action is required
	Inactive	Want to establish communication on the network	Reconfigure the module, or port, that is inactive.
Speed is	100 or 1000 Mbps	Do not want to change your port speed	No action is required. **Important:** 100 Mbps is the default port speed.
		Want to reduce your port speed to 10 Mbps	You must manually configure your module and reset your module.
	10 Mbps	Want to increase your port speed to 100 Mbps	Reset your module
		Do not want to change your port speed	No action is required.
Duplex is	Full	Are sending large amounts of data	No action is required. **Important:** Full Duplex is the default port setting. Full-duplex ports eliminate collisions because each device has separate channels for the transmission and receipt of large amounts of data.
	Half	Are not sending large amounts of data	No action is required. **Important:** Delays due to collisions or switch traffic are usually negligible, but can become a problem if you need to send much data.
		Are sending large amounts of data	Change your module's Duplex setting to Full.
Autonegotiate Status❶ is	Speed and/or Duplex	Are using a fiber converter	Change your module's Autonegotiate status to None. **Important:** Fiber links do not support autonegotiation.
		Are not using a fiber converter	No action is required. **Important:** Speed and/or Duplex is the default setting. Autonegotation enables devices to select the best way to communicate without you having to do any configuring. All devices with an Ethernet speed rating of 100 Mbps are required to support autonegotiation.
	None	Are not using a fiber converter	Change your module's Autonegotiate status to Speed and/or Duplex.

❶ When you use an EtherNet/IP communication module with multiple ports, make sure that you use the same Autonegotiate Status configuration for both ports.

2. Review the values in the Media Counters Port 1 table.

Media Counters Port 1	
Alignment Errors	0
FCS Errors	0
Single Collisions	0
Multiple Collisions	0
SQE Test Errors	0
Deferred Transmissions	0
Late Collisions	0
Excessive Collisions	0
MAC Transmit Errors	0
Carrier Sense Errors	0
Frame Too Long	0
MAC Receive Errors	0

If	Then
Any media counters are greater than zero	You need to investigate further.
These errors are counted: • Alignment • FCS • Carrier Sense	A duplex mismatch exists between your EtherNet/IP communication module and the switch port. To clear the duplex mismatch: 1. Configure the EtherNet/IP communication module and the corresponding Ethernet switch port for a forced operation, not autonegotiation. 2. Verify that the firmware revision of your Logix controller and switch, or converter are identical. 3. If the revisions are not identical, replace the controller, switch, or converter so that they match.
Single Collisions or Multiple Collisions are greater than zero	No action is required. **Important:** If two stations attempt to transmit data simultaneously, the packets collide with each other. However, collisions are not errors and do not indicate a network problem. The number of network collisions can vary greatly due to traffic patterns or CPU utilization. Consequently, there is no set range of acceptable collisions for each outgoing packet. Collisions are a normal aspect of Ethernet networking.
Late Collisions are greater than zero	1. Check to see if a network segment is too long. 2. Remove repeaters from between devices.
Excessive Collisions are greater than zero	Calculate your network's typical rate of excessive collisions and decide whether the rate of packet loss will affect your network's performance. **Important:** Excessive collisions indicate that your network has become congested. For each collision after the sixteenth, your network drops a packet.
MAC Transit Errors are greater than zero	No action is required.
Frame Too Long is greater than zero	Limit the size of your tags to ≤ 500 bytes.

Ethernet Managed Switch Considerations

To help troubleshoot the EtherNet/IP network, a managed switch must be used.

These are important features in a managed switch:

- Internet Group Multicast Protocol (IGMP) snooping
- Support for Virtual Local Area Networks (VLAN)
- Port mirroring

IMPORTANT Use a switch equipped with wire-speed switching fabric. The switch fabric is a measure of the maximum traffic that a switch can handle without dropping a packet and without storing a packet in memory. Wire-speed switching fabric refers to a switch that can handle the maximum data rate of the network on each of its ports.

Switches are typically rated in Gbps. For a 10-port switch connected to EtherNet/IP products, the maximum data rate that is needed, is typically 100...200 MB/s. Therefore, a 10-port-switch rated at least 1 GB/s should be adequate for an EtherNet/IP application.

Internet Group Multicast Protocol

EtherNet/IP implicit (I/O) messaging mostly uses IP multicasting to distribute I/O control data, that is consistent with the CIP produced/consumer model. Most switches retransmit multicast packets and broadcast packets to all ports.

IGMP snooping constrains the flooding of multicast traffic by dynamically configuring switch ports so that multicast traffic is forwarded only to ports associated with a particular IP multicast group. This also helps minimize the CPU utilization rate.

Switches that support IGMP snooping learn which ports have devices that are part of a particular multicast group and only forward the multicast packets to the ports that are part of the multicast group.

IMPORTANT Not all switches support the IGMP snooping querier function, that is, snooping. Those that do not support IGMP snooping querier require a router. For switches that do support IGMP snooping, you can configure them to conduct the polling.

IGMP snooping cannot control unicast or broadcast traffic. To learn how to control unicast or broadcast traffic, see Virtual Local Area Networks on page 250.

This example assumes that the switch does not support IGMP snooping querier function, so a router is required.

Figure 96 - IGMP Snooping Example

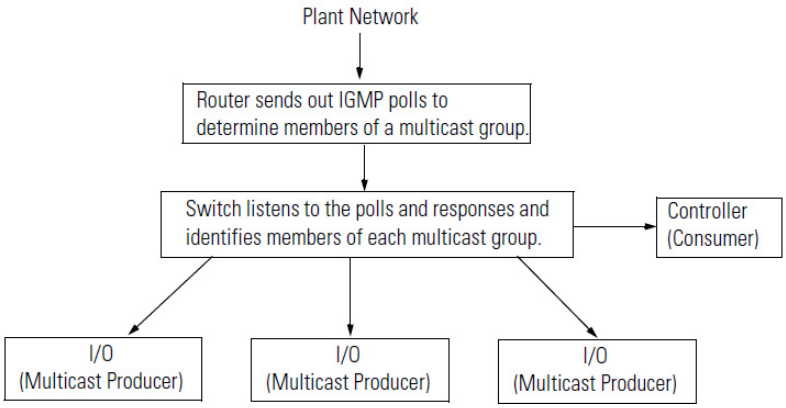

Virtual Local Area Networks

With a managed switch, virtual local area networks (VLAN) can be established to segregate various kinds of network traffic and also increase security between the networks. Multiple isolated networks could be created so that the traffic from one network does not burden the other network.

As with IGMP snooping, VLAN can control multicast traffic. However, unlike IGMP snooping, VLAN can also control and block this traffic:

- Unicast traffic
- Broadcast traffic

Figure 97 - Virtual Local Area Networks (VLAN)

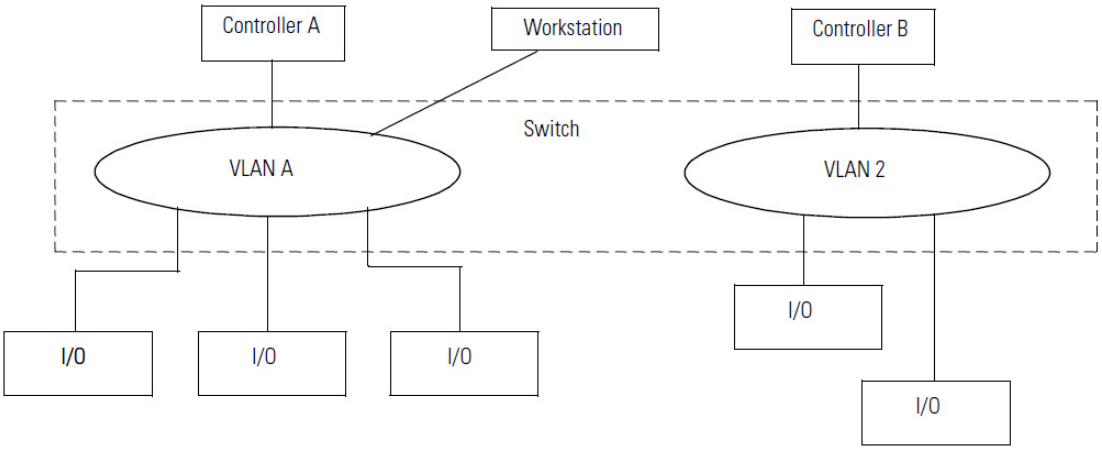

Port Mirroring

Select a managed switch that supports port mirroring. With port mirroring, frames being transmitted on one port to another port, can be directed for analysis by a traffic analyzer. Besides monitoring the ethernet media counters, port mirroring allows anomalies in traffic flow to be spotted immediately. A traffic analyzer can monitor the traffic on a given port and troubleshoot a problem. Without port mirroring, frames on other ports cannot be seen. The effective support and maintenance of ethernet networks often depends on reliable traffic analysis.

These are some benefits of port mirroring:

- Monitoring explicit messages between controllers
- Monitoring implicit or I/O traffic

Control Module Removal and Installation

Removal of Control Module

ATTENTION: To avoid shock hazard, disconnect main power before working on the controller, motor, or control devices.

1. Disconnect power by going to the control module and turning OFF the At-Motor disconnect and performing lockout-tagout per your company policy.
2. Remove motor cable.
3. Loosen the four mounting screws.
4. Unplug the Control module from the base by pulling forward.

Installation of Control Module

5. Install control module.
6. Tighten four mounting screws.
7. Install motor cable.

Figure 98 - Control Module Replacement

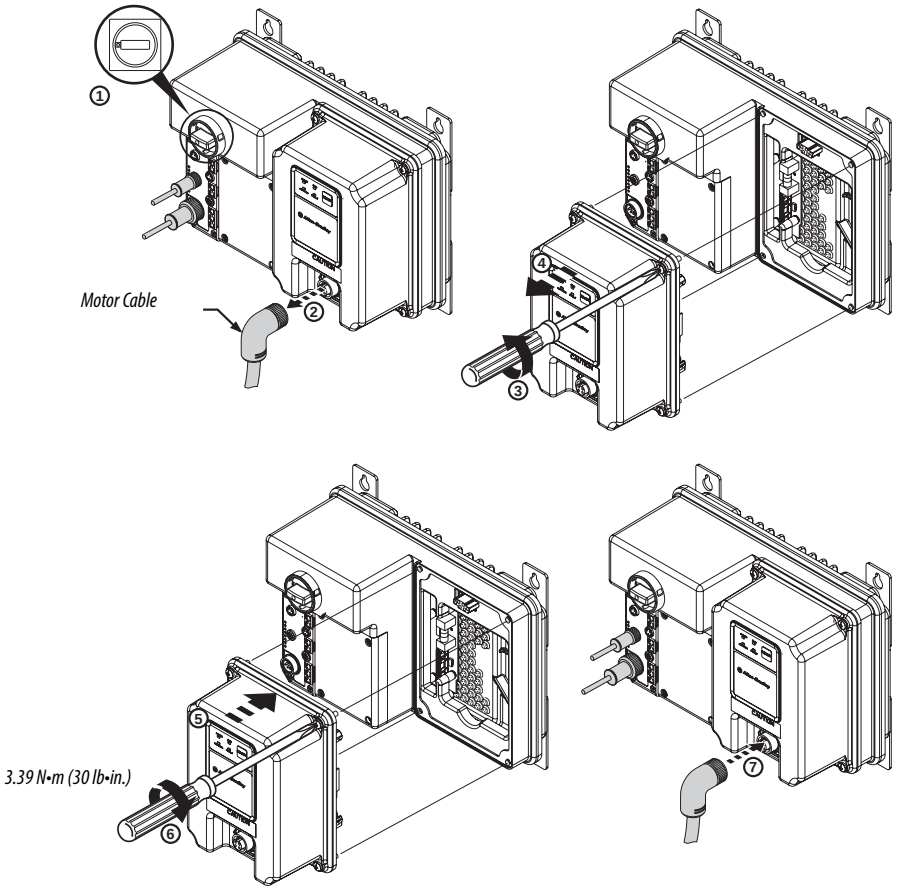

Note: DeviceNet™ base module is shown.

Fuse Replacement

ATTENTION: To avoid shock hazard, disconnect main power before working on the controller, motor, or control devices.

Table 48 - Control Voltage and Output Fuse Replacement

Specification	Output Fuse	Control Power Fuse
Cat. No.	25176-155-03	25172-260-17
Description	Fast-acting, high interrupting capacity tubular fuse	UL Listed Class CC,CSA HRC-1,Interupting, Rejection Feature
Current	2.5 A	7 A
Interrupting Capacity	1500 A	200 ka
Voltage Rating	250V	600V (Maximum)
Manufacturer	Littlefuse PN 021602.5	Cooper Bussman PN KTK-R-7 or Littlefuse PN KLKR007.T
Dimension mm (in.):	20 (0.8) x 5 (0.2)	38.1 (1.5) x 10.2 (0.4)

Figure 99 - Control Voltage and Output Fuse Replacement

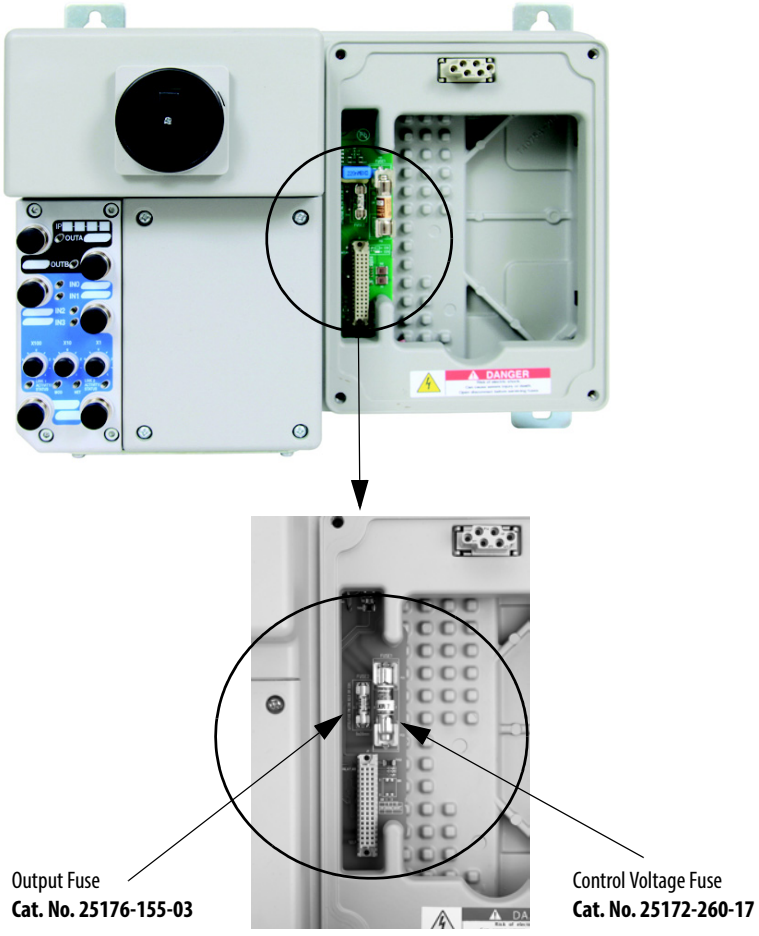

Table 49 - Source Brake Fuse Replacement (Bulletin 284E only)

Specification	Source Control Brake Fuse
Cat. No.	W25172-260-12
Description	3.0A UL Listed Class CC,CSA HRC-1, Rejection Feature
Current	3.0A
Interrupting Capacity	200ka
Voltage Rating	600V (Maximum)
Manufacturer	Cooper Bussman PN KTK-R-3 or Littlefuse PN KLKR003.T
Dimension mm (in.):	38.1 (1.5) x 10.2 (0.4)

Figure 100 - Source Brake Fuse Replacement (Bulletin 284E only)

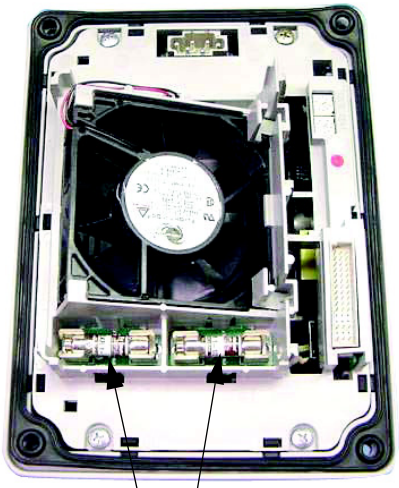

Source Control Brake Fuses
Cat. No. W25172-260-12

Resetting Source Brake Fuse Faults

Replace the fuse and cycled unswitched power to reset the fault.

Specifications for ArmorStart Controllers with EtherNet/IP

Bulletin 280E, 281E

Electrical Ratings		UL/NEMA				IEC	
Power Circuit	Rated Operation Voltage	200…575V				200…575V	
	Rate Insulation Voltage	600V				600V	
	Rated Impulsed Voltage	6 kV				6 kV	
	Dielectric Withstand	2200V AC				2500V AC	
	Operating Frequency	50/60 Hz				50/60 Hz	
	Utilization Category	N/A				AC-3	
	Protection Against Shock	N/A				IP2X	
	Rated Operating Current Max.	280E_-_____-10A-* ❶	1.2 A				
		280E_-_____-10B-* ❶	2.5 A				
		280E_-_____-10C-* ❶	5.5 A				
		280E_-_____-25D-* ❶	16 A				
Control Circuit	Rated Operation Voltage	24V DC (+10%, –15%) A2 (should be grounded at voltage source)					
	Rate Insulation Voltage	250V				250V	
	Rated Impulsed Voltage	—				4kV	
	Dielectric Withstand	1500V AC				2000V AC	
	Overvoltage Category	—				III	
	Operating Frequency	50/60 Hz				—	
Short Circuit Protection	Short Circuit Protection Device (SCPD) Performance Type 1	**Gland Type**	**Current Rating**	**Short Circuit Protection**		**480Y/277V**	**480V**
		Any CR or DR	0.24…1.2 A	10A, 10B, 10C	**Sym. Amps rms**	65 kA	65 kA
			0.5…2.5 A		**Max. Circuit Breaker** ❺	100 A	60 A
			1.1…5.5 A		**Max. Fuse**	100 A	60 A
			3.2…16 A	25D	**Sym. Amps rms**	30 kA	30 kA
					Max. Circuit Breaker ❺	100 A	60 A
					Max. Fuse	100 A	60 A
		Any RR	0.24…1.2 A	10A, 10B, 10C	**Sym. Amps rms**	45 kA / 65 kA	65 kA
			0.5…2.5 A		**Max. Circuit Breaker** ❻	30 A ❸ / N/A	N/A
			1.1…5.5 A		**Max. Fuse** **- Non-time Delay** ❷ **- Time Delay** ❷	40 A / 40 A 20 A / 20 A	40 A 20 A
			3.2…16 A	25D	**Sym. Amps rms**	N/A / 30 kA	30 kA
					Max. Circuit Breaker ❻	N/A / 100 A ❹	60 A ❹
					Max. Fuse ❷	N/A / 100 A	60 A
	SCPD List	Size per NFPA 70 (NEC) or NFPA 79 for Group Motor Applications					

❶ See Contactor Life Load Curves on page 260
❷ Type J, CC, and T fuses only.
❸ Only when used with Bulletin 140U-H frame.
❹ Only when used with Cat. No. 140U-D6D3-xxx frame or smaller.
❺ Bulletin 140U-H or 140G-H circuit breaker, not rated more than 480V, 100 A and a maximum interrupt of 65 000 RMS symmetrical amperes.
❻ When protected by Cat. No. 140U-D6D3-xxx circuit breaker, not rated more than 480/277V, 30 A, having an interrupt rating not less than 45 000 RMS symmetrical amperes .

		UL/NEMA	IEC
Environmental	Operating Temperature Range	–20…40 °C (–4…104 °F)	
	Storage and Transportation Temperature Range	–25….85 °C (–13…185 °F)	
	Altitude ❶	2000 m	
	Humidity	5…95% (on-condensing)	
	Pollution Degree	3	
	Enclosure Ratings	NEMA 4/12	IP67
	Approximate Shipping Weight	10.4 kg (23 lbs)	
Mechanical	**Resistance to Shock**		
	Operational	15 G	
	Non-Operational	30 G	
	Resistance to Vibration		
	Operational	1 G, 0.15 mm (0.006 in.) Displacement	
	Non-Operational	2.5 G, 0.38 mm (0.015 in.) Displacement	
	Power and Ground Terminals		
	Wire Size	Primary/Secondary Terminal: #16…#10 AWG	Primary/Secondary Terminal: 1.0…4.0 mm2
	Tightening Torque	Primary Terminal: 10.8 lb·in. Secondary Terminal: 4.5 lb·in.	Primary Terminal: 1.2 N·m Secondary Terminal: 0.5 N·m
	Wire Strip Length	0.35 in. (9 mm)	
	Control Terminals		
	Wire Size	#18…#10 AWG	1.0…4.0 mm2
	Tightening Torque	6.2 lb·in.	0.7 N·m
	Wire Strip Length	0.35 in. (9 mm)	
	Disconnect Lock Out	Recommend 8 mm (5/16 in.) lock shackle or hasp. The hasp should not exceed 8 mm (5/16 in.) when closed.	

Contactor Mechanical Life	**CatNo 100-**	**Ops**	**C12 (AC3)**	**C23 (AC3)**
	280/1_-_12*	Mil	**13**	—
	280/1_-_23*	Mil	—	**13**

Other Rating			
	EMC Emission Levels		
	Conducted Radio Frequency Emissions	10V rms Communications Cables 10V rms (PE) 150 kHz…80 MHz	
	Radiated Emissions	Class A, Group 1, Equivalent to C2 emissions	
	EMC Immunity Levels		
	Electrostatic Discharge	4 kV contact and 8 kV Air	
	Radio Frequency Electromagnetic Field	10V/m, 80 MHz…1 GHz 3V/m, 1.4 GHz…2 GHz 1V/m, 2.0 GHz …2.7 GHz	
	Fast Transient	2 kV (Power) 2 kV (PE) 1 kV (Communications and Control)	
	Surge Transient	1 kV (12) L-L, 2 kV (2) L-N (Earth)	
	Overload Current Range	280_-_____-10A-*	0.24…1.2 A
		280_-_____-10B-*	0.5…2.5 A
		280_-_____-10C-*	1.1…5.5 A
		280_-_____-25D-*	3.2…16 A
	Trip Classes ❷	10, 15, 20	
	Trip Rating	120% of Full Load current (FLC) Setting	
	Number of poles	3	

❶ Refer to Altitude Derating on page 269 for derating guide

❷ Refer to Motor Overload Trip Curves on page 259

	UL/NEMA	IEC
Standards Compliance	UL 508 CSA C22.2, No. 14 EN/IEC 60947-4 EN/IEC 60947-4-1 CE Marked per Low Voltage 2006/95/EC EMC Directive 2004/108/EC CCC ODVA for EtherNet/IP	
Certifications	cULus (File No. E3125, Guides NLDX, NLDX7)	

EtherNet/IP Version – Control and I/O Power Requirements						
		A1/A2 ❶	**A3/A2 ❷**	**A1/A2 ❶**	**A3/A2 ❷**	**A3/A2 ❸**
	Units	**W/O HOA**		**W/ HOA**		
Control Voltage	Volts	24V DC				
Module Inrush ❹	Amps	0.92	0.30	1.09	0.125	0.295
Module Steady	Amps	0.06	0.30	0.23	0.125	0.295
Total Control Power (Pick Up)	Watts	22.08	7.20	26.16	3.00	7.08
Total Control Power (Running)	Watts	1.44	7.20	5.52	3.00	7.08

❶ Add power requirements for outputs (1 A max.) to A1/A2.
❷ Add power requirements for inputs (200 mA max.) to A3/A2.
❸ If A1 power is disconnected.
❹ Instantaneous capacitive inrush exists for less than 10 ms, which can exceed 20 A. The power supply must be capable of supporting this amount of instant power demand when multiple units are turned ON simultaneously. If supplies are weaker, it is recommended to apply unswitched power (A3-A2) first and after a 2…4 second delay, apply switched power.

		UL/NEMA	IEC
Input Ratings – Sourced from Control Circuit (A3/A2)	Rated Operation Voltage	24V DC	
	Input On-State Voltage Range	10…26V DC	
	Input On-State Current	3.0 mA @ 10V DC	
		7.2 mA @ 24V DC	
	Input Off-State Voltage Range	0…5V DC	
	Input Off-State Current	<1.5 mA	
	Maximum Input Frequency Response	200 Hz (DeviceLogix response is greater than 200 Hz. Network response depends on control system network performance.)	
	Input Filter – Software Selectable		
	Off to On	Settable from 0…64 ms in 1 ms increments	
	On to Off	Settable from 0…64 ms in 1 ms increments	
	Input Compatibility	N/A	IEC 1133 Type 1+
	Number of Inputs	4	
	Sensor Source		
	Voltage Status Only	11…26.4V DC from unswitched power (A3-A2)	
	Current Available	50 mA max. per input, 200 mA for any single point	

		UL/NEMA	IEC
Output Ratings – Sourced from Control Circuit (A1/A2) (Do not use as a power supply source to other devices)	Rated Operation Voltage	26.4V DC	
	Rate Insulation Voltage	250V	
	Dielectric Withstand	1500V AC (UL)	2000V AC (IEC)
	Operating Frequency	Solid state sourcing output	
	Type of Current	24V DC	
	Conventional Thermal Current Ith	0.5 A each, 1 A max. combined	
	Peak Output Current	Current limited 2-8 amps (5 amps nominal) @ 24V DC	
	Type of Contacts	Normally open (N.O.)	
	Number of Contacts	2	
	Load Types	Resistive or light inductive	
	Surge Suppression	Integrated diode, clamps @ 35V DC	
	Thermo-Protection	Integrated short circuit and over current protection	
	Maximum Cycle Rate	30 operations/minute capacitive and inductive loads	
	Maximum Blocking Voltage	35V DC	
	Maximum On-State Voltage @ Maximum Output	1.5V DC	
	Maximum Off-State Leakage Current	10 µA	
Device Level Ring (DLR)		Beacon-based performance including IEEE 1588 end to end transparent clock	
	Fault Recovery	Ring recovery time is less than 3 ms for a 50 node network	
Ethernet Port	Ethernet Receptacles	2 D-coded, 4-pin female M12 connectors	
	Ports	Embedded switch with 2 ports	
	IP Address	DHCP enabled by default	
	DHCP Timeout	30 s	
	Communication Rate	10/100 Mbs with auto negotiate half duplex and full duplex	
	Data	• Transported over both TCP and UDP • Min. of 500 I/O packets/second (pps) • Supports up to 150 concurrent TCP sockets	
Web Server		Embedded web server	
	Security	Login and password configurable	
	E-mail	Support Simple Mail Transfer Protocol (SMTP)	
	Configuration	Status, diagnostics, and configuration tabs	
Device Connections	Supports scheduled (Class 1) and unscheduled (Class 3 & UCMM) connections		
	6 - Class 3 connections are supported simultaneously		
	Supports up to 2 Class 1 CIP connections [Exclusive owner (data) or listen-only]. One connection per PLC. Listen-only connection requires a data connection to be established.		
	Class 1 Connection API: 2…3200 ms, Class 3 Connection API: 100…10 000 ms		
	20 ms Request Packet Interval (RPI) default		
	3 concurrent Encapsulation sessions		
	TCP port supports 5 concurrent incoming connections		

Motor Overload Trip Curves

Motor overload current parameter provides class 10,15, and 20 overload protection. Ambient insensitivity is inherent in the electronic design of the overload.

Figure 101 - Bulletin 280E/281E Overload Trip Curves

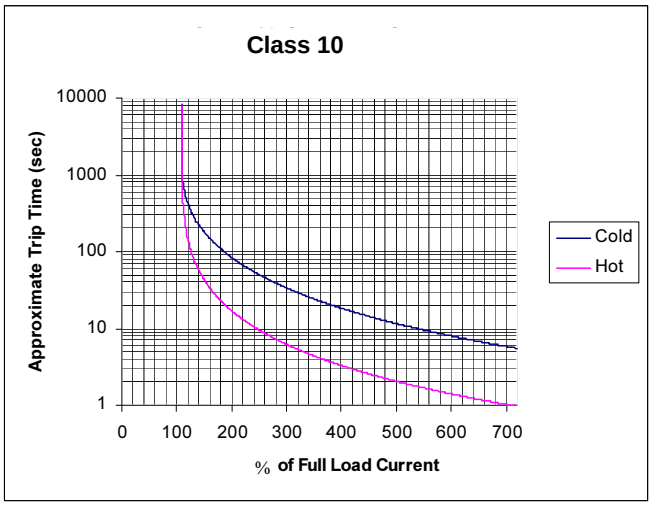

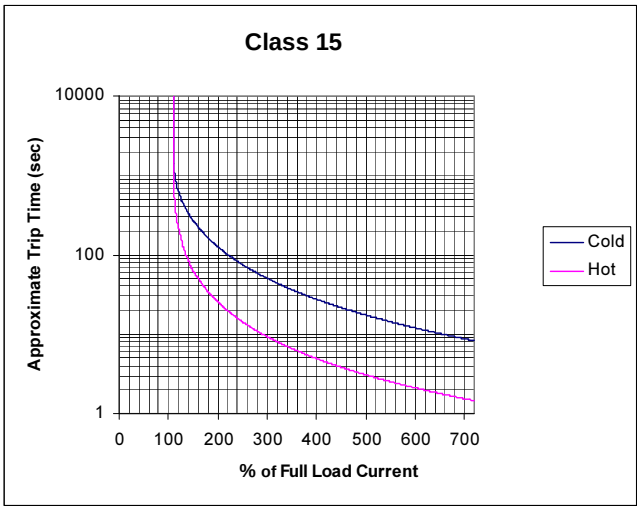

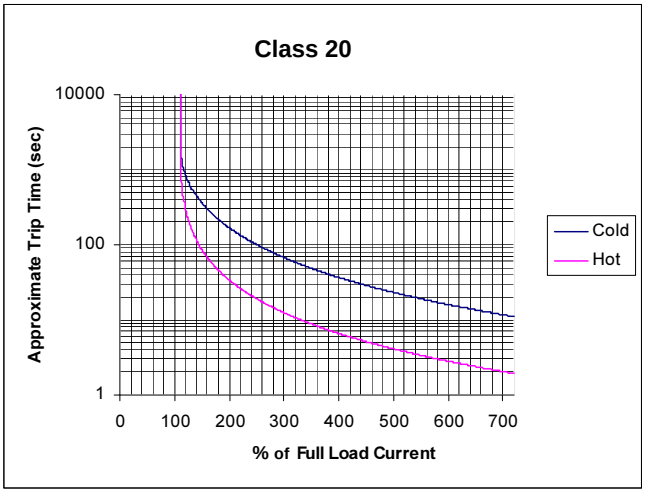

Note: For 280 and 281, if an overload fault occurs it may require 60 s or more before a fault reset is allowed. Refer to Overload Class Parameter 107, Thermo-Utilization parameter 105, and OL Reset Level parameter 108 to adjust the reset time.

Note: For 280 and 281, when the mechanical motor brake voltage is applied using power from the load side of the ArmorStart controller, this current adds to the load and may result in a phase imbalance or overload if the FLA of the motor and the brake current are similar in scale.

Contactor Life Load Curves

280/1_-_12* = 100-C12*
280/1_-_23* = 100-C23*

Life Load Curves:
AC-3 Switching of squirrel-cage motors while starting
U_e = 230…400…460V

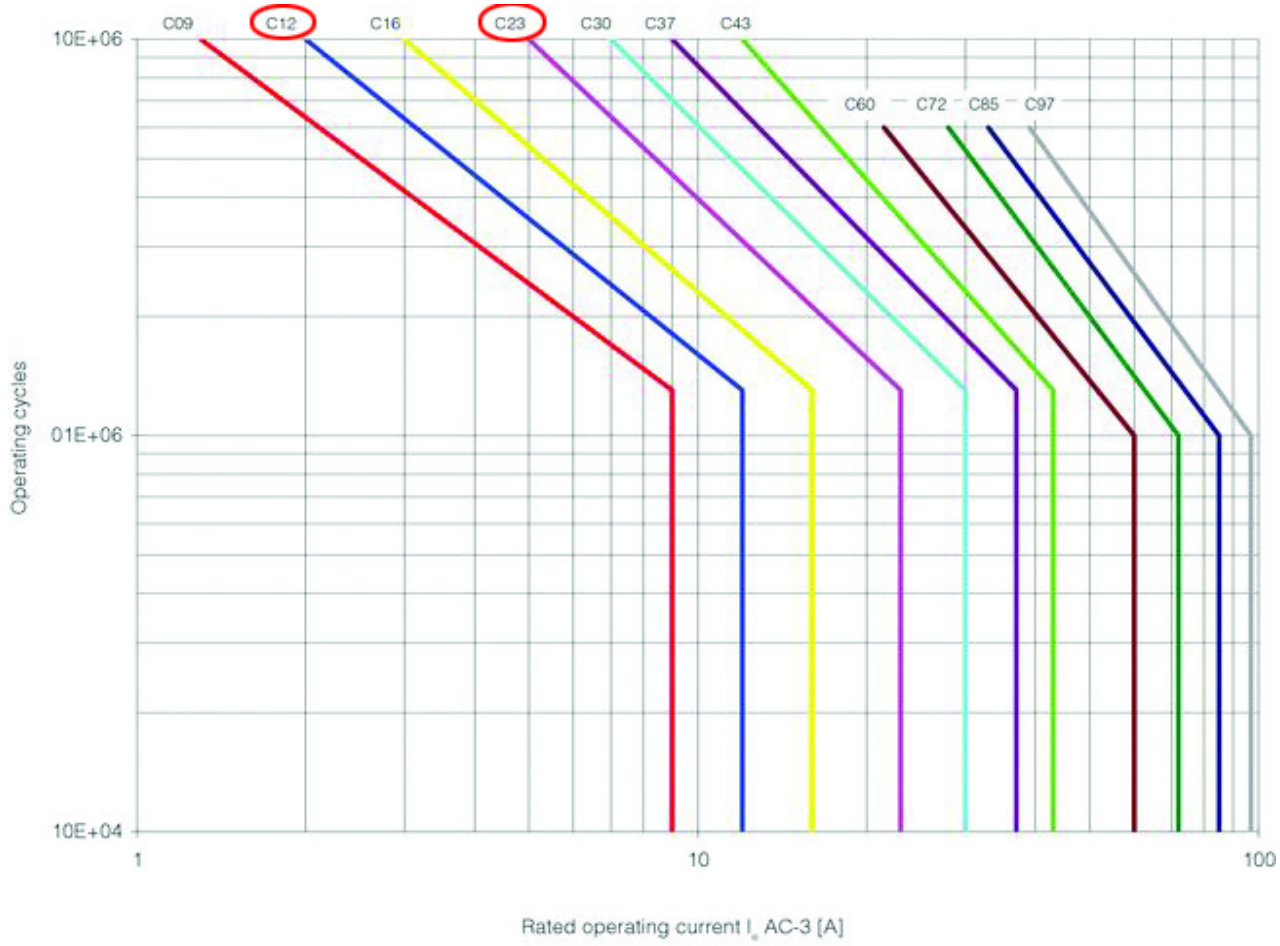

AC-3 & AC-4 10% AC-4 Mixed operation of squirrel-cage motors
U_e = 400…460V

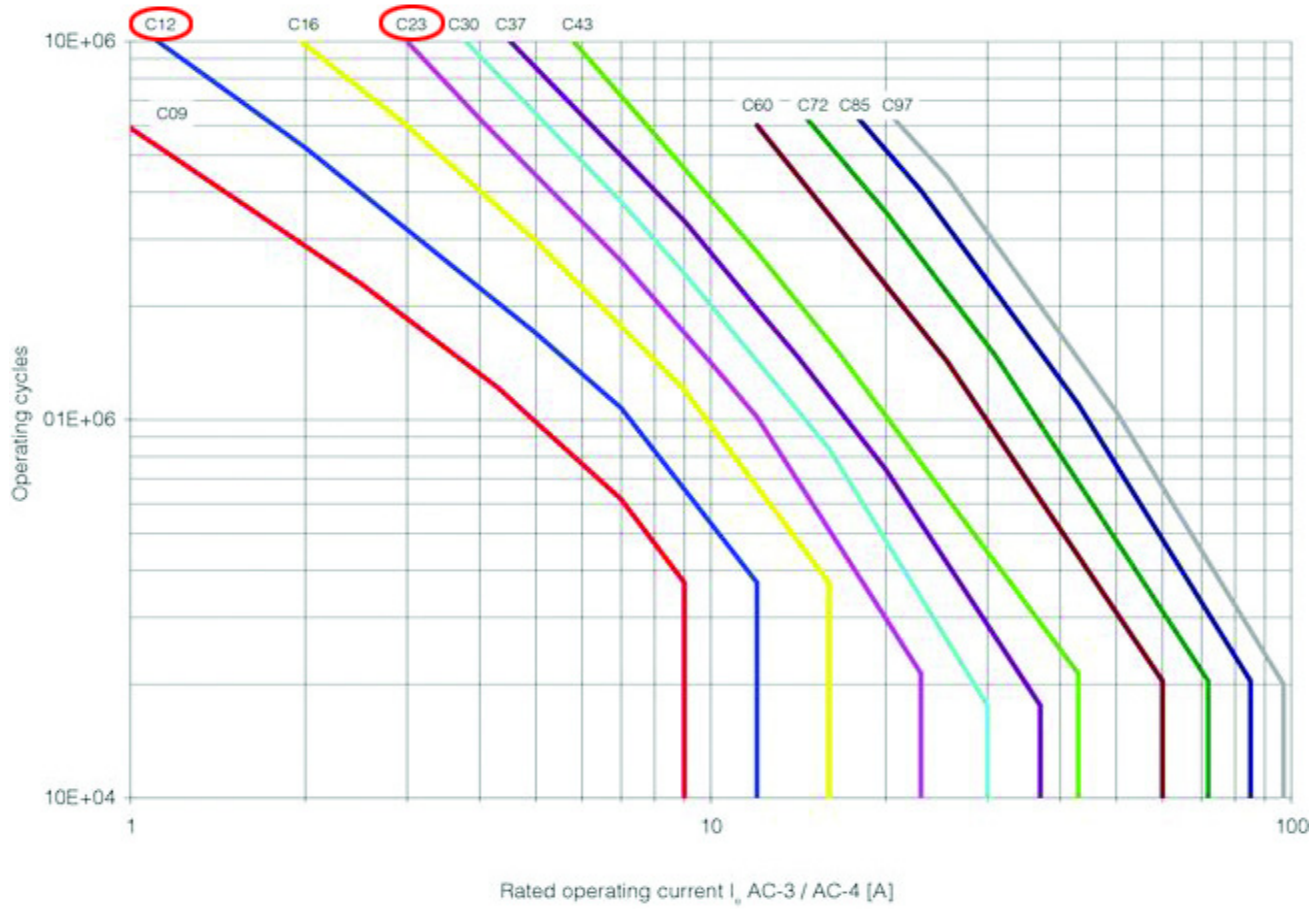

Maximum Operating Rates:

AC-3 Switching of squirrel-cage motors while starting

U_e = 230…460V, Relative operating time 40%, Starting time tA = 0.25 s

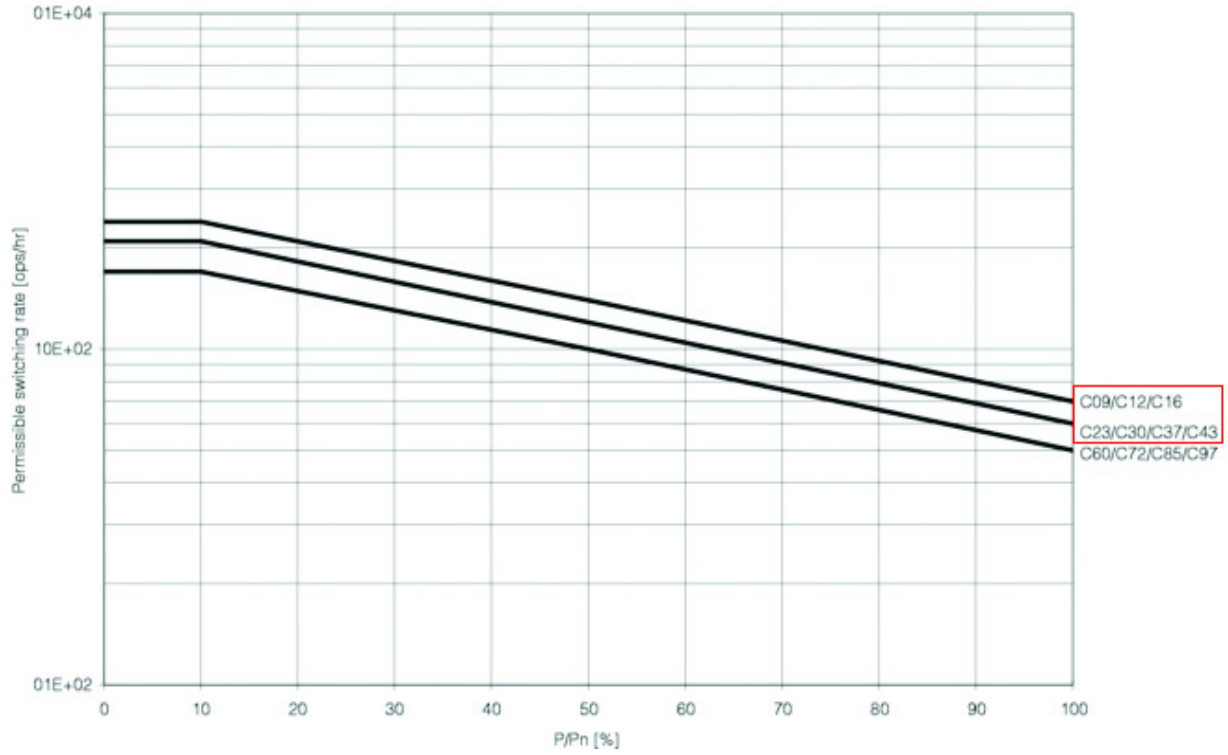

AC-4 Inching of squirrel-cage motors

Ue = 230…460V, Starting time tA = 0.25 s

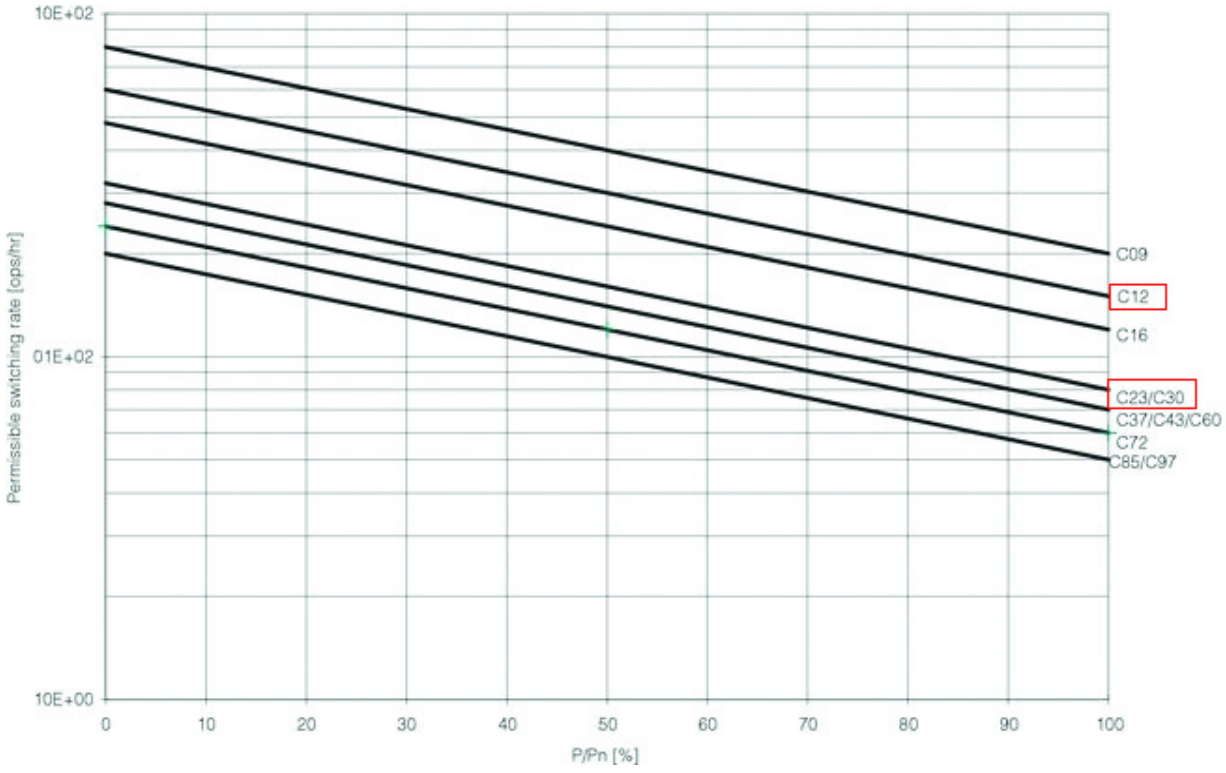

Bulletin 284E

Electrical Ratings		UL/NEMA				IEC	
Power Circuit	Rated Operation Voltage	380…480V				380…480V	
	Rate Insulation Voltage	600V				600V	
	Rated Impulsed Voltage	6 kV				6 kV	
	Dielectric Withstand	2200V AC				2500V AC	
	Operating Frequency	50/60 Hz				50/60 Hz	
	Utilization Category	N/A				AC-3	
	Protection Against Shock	N/A				IP2X	
	Rated Max. Output Operating Current	**SVC - Performance**					
				3-phase Hp Rating		**Output Current [A]**	
		284E-FVD1P4Z*		0.5		1.4	
		284E-FVD2P3Z*		1		2.3	
		284E-FVD4P0Z*		2		4	
		284E-FVD6P0Z*		3		6	
		284E-FVD7P6Z*		5		7.6	
Control Circuit	Rated Operation Voltage	24V DC (+10%, –15%) A2 (should be grounded at voltage source)					
	Rate Insulation Voltage	250V				250V	
	Rated Impulsed Voltage	—				4 kV	
	Dielectric Withstand	1500V AC				2000V AC	
	Overvoltage Category	—				III	
	Operating Frequency	50/60 Hz				50/60 Hz	
Short Circuit Protection	Short Circuit Protection Device (SCPD) Performance Type 1	**Gland Type**	**Current Rating**	**Short Circuit Protection**		**480Y/277V**	**480V**
		Any CR or DR	0.24…1.2 A	10A, 10B, 10C	**Sym. Amps rms**	65 kA	65 kA
			0.5…2.5 A		**Max. Circuit Breaker** ❹	100 A	60 A
			1.1…5.5 A		**Max. Fuse**	100 A	60 A
			3.2…16 A	25D	**Sym. Amps rms**	30 kA	30 kA
					Max. Circuit Breaker ❹	100 A	60 A
					Max. Fuse	100 A	60 A
		Any RR	0.24…1.2 A	10A, 10B, 10C	**Sym. Amps rms**	45 kA / 65 kA	65 kA
			0.5…2.5 A		**Max. Circuit Breaker** ❺	30 A ❷ / N/A	N/A
			1.1…5.5 A		**Max. Fuse** **- Non-time Delay** ❶ **- Time Delay** ❶	40 A 20 A / 40 A 20 A	40 A 20 A
			3.2…16 A	25D	**Sym. Amps rms**	N/A / 30 kA	30 kA
					Max. Circuit Breaker ❺	N/A / 100 A ❸	60 A ❸
					Max. Fuse ❶	N/A / 100 A	60 A
	SCPD List	Size per NFPA 70 (NEC) or NFPA 79 for Group Motor Applications					

❶ Type J, CC, and T fuses only.

❷ Only when used with Bulletin 140U-H frame.

❸ Only when used with Cat. No. 140U-D6D3-xxx frame or smaller.

❹ Bulletin 140U-H or 140G-H circuit breaker, not rated more than 480V, 100 A and a maximum interrupt of 65 000 RMS symmetrical amperes.

❺ When protected by Cat. No. 140U-D6D3-xxx circuit breaker, not rated more than 480/277V, 30 A, having an interrupt rating not less than 45 000 RMS symmetrical amperes .

		UL/NEMA	IEC
Environmental	Operating Temperature Range	–20…40 °C (–4…104 °F)	
	Storage and Transportation Temperature Range	–25….85 °C (–13…185 °F)	
	Altitude ❶	1000 m	
	Humidity	5…95% (on-condensing)	
	Pollution Degree	3	
	Enclosure Ratings	NEMA 4/12	IP67
	Approximate Shipping Weight	13.6 kg (30 lb)	
Mechanical	Resistance to Shock		
	Operational	15 G	
	Non-Operational	30 G	
	Resistance to Vibration		
	Operational	1 G, 0.15 mm (0.006 in.) Displacement	
	Non-Operational	2.5 G, 0.38 mm (0.015 in.) Displacement	
	Power and Ground Terminals		
	Wire Size	Primary/Secondary Terminal: #16…#10 AWG	Primary/Secondary Terminal: 1.0…4.0 mm2
	Tightening Torque	Primary Terminal: 10.8 lb·in. Secondary Terminal: 4.5 lb·in.	Primary Terminal: 1.2 N·m Secondary Terminal: 0.5 N·m
	Wire Strip Length	9 mm (0.35 in.)	
	Control		
	Terminal Wire Size	#18…#10 AWG	1.0…4.0 mm2
	Tightening Torque	6.2 lb·in.	0.7 N·m
	Wire Strip Length	9 mm (0.35 in.)	
	Disconnect Lock Out	Recommend 8 mm (5/16 in.) lock shackle or hasp. The hasp should not exceed 8 mm (5/16 in.) when closed.	

❶ Refer to Altitude Derating on page 269 for derating guide

Other Rating	**EMC Emission Levels**	
	Conducted Radio Frequency Emissions	10V rms Communications Cables 10V rms (PE) 150 kHz…80 MHz
	Radiated Emissions	Class A, Group 1, equivalent to C2 emissions
	EMC Immunity Levels	
	Electrostatic Discharge	4 kV contact and 8 kV Air
	Radio Frequency Electromagnetic Field	10V/m, 80 KHz…1 GHz 3V/m, 1.4 GHz…2 GHz 1V/m, 2.0 GHz …2.7 GHz
	Fast Transient	2 kV (Power) 2 kV (PE) 1 kV (Communications and Control)
	Surge Transient	1 kV (12) L-L, 2 kV (2) L-N (Earth)
	Internal Fan for 284	Fan L10 Operation data: 80K hr at 40 °C (104 °F)

	UL/NEMA	IEC
Standards Compliance	UL 508C CSA C22.2, No. 14 EN50178 EN61800-3 EN/IEC 60947-4-2 CE Marked per Low Voltage 2006/95/EC EMC Directive 2004/108/EC ODVA for EtherNet/IP	
Certifications	cULus (File No. E207834, Guide NMMS, NMMS7)	

EtherNet/IP Version – Control and I/O Power Requirements

	Units	A1/A2 ❶	A3/A2 ❷	A1/A2 ❶	A3/A2 ❷	A3/A2 ❸
		W/O HOA		W/ HOA		
Control Voltage	Volts	24V DC				
Module Inrush ❹	Amps	0.92	0.30	1.09	0.125	0.295
Module Steady	Amps	0.06	0.30	0.23	0.125	0.295
Total Control Power (Pick Up)	Watts	22.08	7.20	26.16	3.00	7.08
Total Control Power (Running)	Watts	1.44	7.20	5.52	3.00	7.08
Total Control Power (with Dynamic Brake or Output Contactor option)	Watts			12	3	8.4
Total Control Power (with Dynamic Brake and Output Contactor option)	Watts			15	3	8.4

❶ Add power requirements for outputs (1 A max.) to A1/A2.
❷ Add power requirements for inputs (200 mA max.) to A3/A2.
❸ If A1 power is disconnected.
❹ Instantaneous capacitive inrush exists for less than 10 ms, which can exceed 20 A. The power supply must be capable of supporting this amount of instant power demand when multiple units are turned ON simultaneously. If supplies are weaker, it is recommended to apply unswitched power (A3-A2) first and after a 2. . . 4 second delay, apply switched power.

Drive Ratings – VFD Output Current vs. Input Current

Line Voltage [V]	Frequency [Hz]	3-Phase kW Rating	3-Phase Hp Rating	Output Current [A]	Input Current [A]
				Sensorless Vector Control	Sensorless Vector Control
380	50	0.4	—	1.4	2.15
		0.75	—	2.3	3.80
		1.5	—	4.0	6.40
		2.2	—	6.0	9.00
		3.0	—	7.6	12.40
460	60	—	0.5	1.4	1.85
		—	1	2.3	3.45
		—	2	4.0	5.57
		—	3	6.0	8.20
		—	5	7.6	12.5

Drive Characteristics	
Output Frequency	0…400 Hz (Programmable)
Efficiency	97.5% (Typical)
Sensorless Vector Control	
Maximum (kW) Hp Rating/Input Voltage	5 Hp (3.3 kW)/480V AC
Preset Speeds	8
Skip Frequency	✓
StepLogic® Functionality	✓
Timer/Counter Functions	✓

Sensorless Vector Control (SVC)

Protective Specifications – Sensorless Vector Control	
Motor Overload Protection	I^2t overload protection – 150% for 60 seconds, 200% for 3 seconds (provides Class 10 protection)
Overcurrent	200% hardware limit, 300% instantaneous fault
Over Voltage	380…460V AC Input – Trip occurs @ 810V DC bus voltage (equivalent to 575V AC incoming line)
Under Voltage	380…480V AC Input – Trip occurs @ 390V DC bus voltage (equivalent to 275V AC incoming line)
Faultless Power Ride Through	100 milliseconds

Control Specifications – Sensorless Vector Control	
Carrier Frequency	2…16 kHz. Drive rating is based on 4 kHz.
Frequency Accuracy – Digital Input	Within ±0.05% of set output frequency.
Speed Regulation – Open Loop with Slip Compensation	±1% of base speed across a 60:1 speed range
Stop Modes	Multiple programmable stop modes including – Ramp, Coast, DC-Brake, Ramp-to-Hold and S Curve.
Accel/Decel	Two independently programmable accel and decel times. Each time may be programmed from 0…600 s in 0.1 s increments.
Electronic Motor Overload Protection	Class 10 protection with speed sensitive response

Minimum DB Resistance			
	Drive Rating		Minimum DB Resistance
Input Voltage	[kW]	[Hp]	[Ω]
480V, 50/60 Hz, Three-Phase	0.4	0.5	97
	0.75	1	97
	1.5	2	97
	2.2	3	97
	4.0	5	77

Motor Overload Trip Curves

Motor OL Current parameter provides Class 10 overload protection. Ambient insensitivity is inherent in the electronic design of the overload.

Figure 102 - 284E Overload Trip Curves

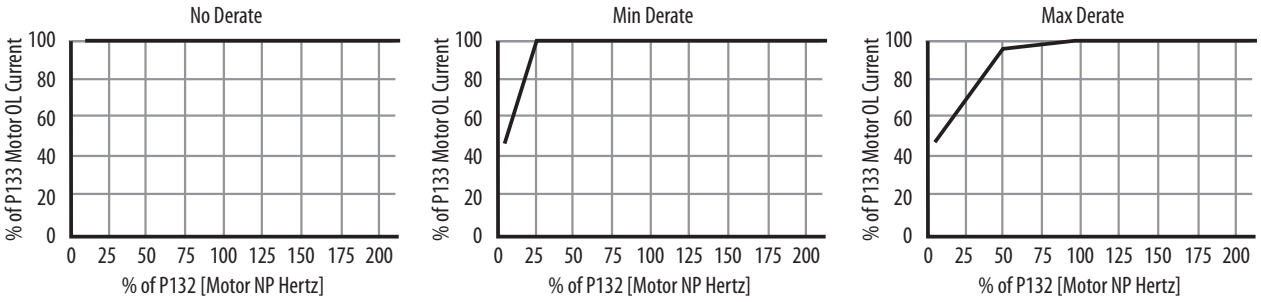

		UL/NEMA	IEC
Input Ratings – Sourced from Control Circuit (A3/A2)	Rated Operation Voltage	24V DC	
	Input On-State Voltage Range	10…26V DC	
	Input On-State Current	3.0 mA @ 10V DC	
		7.2 mA @ 24V DC	
	Input Off-State Voltage Range	0…5V DC	
	Input Off-State Current	<1.5 mA	
	Maximum Input Frequency Response	200 Hz (DeviceLogix response is greater than 200 Hz. Network response depends on control system network performance.)	
	Input Filter – Software Selectable		
	Off to On	Settable from 0…64 ms in 1 ms increments	
	On to Off	Settable from 0…64 ms in 1 ms increments	
	Input Compatibility	N/A	IEC 1+
	Number of Inputs	4	
	Sensor Source		
	Voltage Status Only	11…26.4V DC from unswitched power	
	Current Available	50 mA max. per input, 200 mA, any single point	
Output Ratings – Sourced from Control Circuit (A1/A2)	Rated Operation Voltage	26.4V DC	
	Rate Insulation Voltage	250V	
	Dielectric Withstand	1500V AC (UL)	2000V AC (IEC)
	Type of Control Circuit	Solid state sourcing output	
	Type of Current	24V DC	
	Conventional Thermal Current Ith	0.5 A each, 1 A max. combined	
	Peak Output Current	Current limited 2-8 amps (5 amps nominal) @ 24V DC	
	Type of Contacts	Normally open (N.O.)	
	Number of Contacts	2	
	Load Types	Resistive or light inductive	
	Surge Suppression	Integrated diode, clamps @ 35V DC	
	Thermo-Protection	Integrated short circuit and over current protection	
	Maximum Cycle Rate	30 operations/minute capacitive and inductive loads	
	Maximum Blocking Voltage	35V DC	
	Maximum On-State Voltage @ Maximum Output	1.5V DC	
	Maximum Off-State Leakage Current	10 µA	
Device Level Ring (DLR)	—	Beacon-based performance including IEEE 1588 end to end transparent clock	
	Fault Recovery	Ring recovery time is less than 3 ms for a 50 node network	
Ethernet Port	—	2 D-coded, 4-pin female M12 connectors	
	Ports	Embedded switch with 2 ports	
	IP Address	DHCP enabled by default	
	DHCP Timeout	30 s	
	Communication Rate	10/100 Mbs with auto negotiate half duplex and full duplex	
	Data	•Transported over both TCP and UDP • Min. of 500 I/O packets/second (pps) • Supports up to 150 concurrent TCP sockets	
Web Server	—	Embedded web server	
	Security	Login and password configurable	
	E-mail	Support Simple Mail Transfer Protocol (SMTP)	
	Configuration	Status, diagnostics, and configuration tabs	

	UL/NEMA	IEC
Device Connections	Supports scheduled (Class 1) and unscheduled (Class 3 & UCMM) connections 6 - Class 3 connections are supported simultaneously Supports up to 2 Class 1 CIP connections [Exclusive owner (data) or listen-only]. One connection per PLC. Listen only connection requires a data connection to be established.	
	Class 1 Connection API: 2…3200 ms Class 3 Connection API: 100…10 000 ms	
	20 ms Request Packet Interval (RPI) default	
	3 concurrent Encapsulation sessions	
	TCP port supports 5 concurrent incoming connections	

Altitude Derating

Altitude Rating for Bulletin 280, 281

- No altitude derating up to 2000 m (6562 ft)

Altitude Rating for Bulletin 284

- **0.5 Hp:** No Derating up to 3000 m (9843 ft)
- **1 Hp:** No Derating up to 3000 m (9843 ft)
- **2 Hp:** Derate 1% per 100 m (328 ft) above 1000 m (3281 ft)
- **3 Hp:** No Derating up to 3000 m (9843 ft)
- **5 Hp:** Derate 1% per 100 m (328 ft) above 1000 m

Example: Application requires 2600 m for a 5Hp ArmorStart

- 2600 m-1000 m= 1600 m
- 1600/100 = 16
- 16 * 1%= 16%. Derate output amps by 16%
- (1-.16)*7.6amp = 6.4amp

It is possible to extend the operational range of the units if the ambient temperature is lower than 40 °C (104 °F), or if line reactors are used.

Accessories

Industrial Ethernet Media

D Code Connectivity (M12) – 1585D

Patchcords and Cordsets IP67		
M12 D Code	**Connector Type**	**Cat. No. Unshielded**
	Male Straight to Male Straight	1585D-M4TBDM- ❶
	Male Straight to Male Right Angle	1585D-M4TBDE- ❶
	Male Right Angle to Male Right Angle	1585D-E4TBDE- ❶
	Male Straight to Female Straight	1585D-M4TBDF- ❶

❶ Available in 0.3, 0.6, 1, 2, 5, 10, 15, and increments of 5 meters up to 75 meters.

Patchcords and Cordsets IP20 to IP67		
Front Mount Receptacle	**Connector Type**	**Cat. No. Unshielded**
	Female Front Mount to RJ45	1585D-D4TBJM- ❶
Transition Cable	**Connector Type**	**Unshielded**
	Male Straight to RJ45	1585D-M4TBJM- ❶

❶ Available in 0.3, 0.6, 1, 2, 5, 10, 15, and increments of 5 meters up to 75 meters.

Note: See www.ab.com/networks/media/ethernet to learn more about Industrial Ethernet Media.

M12 to RJ45 Bulkhead Adapter – 1585A	Description	Cat. No.
	• Transition from IP20 environment to IP67 environment • In-cabinet connectivity with RJ45 connector providing On-Machine solution with M12 D Code connector • Differential 100 ohm terminators that are used for unused pairs • Cat 5e	1585A-DD4JD

Sensor Media

Description	Description		I/O Connection	Pin Count	Connector	Cat. No.
	EtherNet/IP Communications	DC Micro Patchcord	Input/Output	4-Pin	Straight Female Straight Male	889D-F4ACDM- ❶
					Straight Female Right Angle Male	889D-F4ACDE- ❶
		DC Micro V-Cable	Input		Straight Female	879D-F4ACDM- ❶
					Right Angle Female	879D-R4ACM- ❶

❶ Replace symbol with desired length in meters (for example, **Cat. No. 889D-F4ACDM-1** for a 1 m cable). Standard cable lengths: 1 m, 2 m, 5 m, and 10 m.

Sensor Wiring

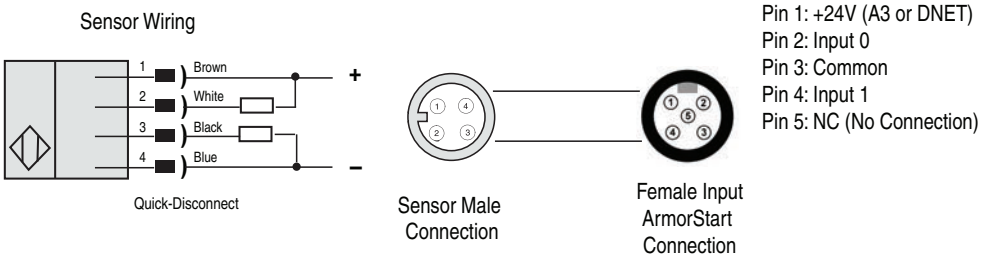

Motor and Brake Cables

Description	Rating	Length m (ft)	Cat. No.
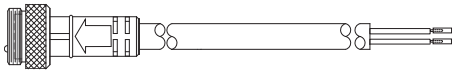			
Motor Cable Cordsets			
90° M22 Motor Cordset	IP67/NEMA Type 4	3 (9.8)	280-MTR22-M3
		4 (13.1)	280-MTR22-M34
		6 (19.6)	280-MTR22-M6
		8 (26.2)	280-MTR22-M68
		10 (32.8)	280-MTR22-M10
		12 (39.4)	280-MTR22-M12
		14 (45.9)	280-MTR22-M14
		20 (65.6)	280-MTR22-M20

Description	Rating	Length m (ft)	Cat. No.
90° M35 Motor Cordset	IP67/NEMA Type 4	3 (9.8)	280-MTR35-M3
		6 (19.6)	280-MTR35-M6
		10 (32.8)	280-MTR35-M10
		14 (45.9)	280-MTR35-M14
		20 (65.6)	280-MTR35-M20
Motor Cable Cordsets, High Flex			
90° M22 Motor Cordset	IP67/NEMA Type 4	3 (9.8)	280-MTRF22-M3
		4 (13.1)	280-MTRF22-M4
		6 (19.6)	280-MTRF22-M6
		8 (26.2)	280-MTRF22-M8
		10 (32.8)	280-MTRF22-M10
		14 (45.9)	280-MTRF22-M14
		20 (65.6)	280-MTRF22-M20
Motor Cable Cordsets, Shielded VFD Motor Cable Cordsets, Shielded (VFD)			
90° M22 Motor Cordset	IP67/NEMA Type 4	3 (9.8)	284-MTRS22-M3
		4 (13.1)	284-MTRS22-M4
		6 (19.6)	284-MTRS22-M6
		8 (26.2)	284-MTRS22-M8
		10 (32.8)	284-MTRS22-M10
		12 (39.4)	284-MTRS22-M12
		14 (45.9)	284-MTRS22-M14
Motor Cable Cordsets, Extended Source/Control Brake			
90° M25 Source Brake Cable	IP67/NEMA Type 4	1 (3.3)	285-BRC25-M1
		3 (9.8)	285-BRC25-M3
		4 (13.1)	285-BRC25-M4
		6 (19.6)	285-BRC25-M6
		8 (26.2)	285-BRC25-M8
		10 (32.8)	285-BRC25-M10
		12 (39.4)	285-BRC25-M12
		14 (45.9)	285-BRC25-M14
		20 (65.6)	285-BRC25-M120
Extended Source/Control Brake Cable Cordsets, High Flex			
90° M25 Source Brake Cable	IP67/NEMA Type 4	3 (9.8)	285-BRCF25-M3
		6 (19.6)	285-BRCF25-M6
		10 (32.8)	285-BRCF25-M10
		14 (45.9)	285-BRCF25-M14
		20 (65.6)	285-BRCF25-M20
Dynamic Brake Cable			
M22 Dynamic Brake Cable (DB Option)	IP67/NEMA Type 4	3 (9.8)	285-DBK22-M3

Description	Rating	Length m (ft)	Cat. No.
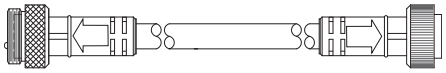			
Motor Cable Patchcords			
90° Male/Straight Female M22	IP67/NEMA Type 4	1 (3.3)	280-MTR22-M1D
		3 (9.8)	280-MTR22-M3D
90° Male/Straight Female M35	IP67/NEMA Type 4	1 (3.3)	280-MTR35-M1D
		3 (9.8)	280-MTR35-M3D
Motor Cable Patchcords, Shielded (VFD)			
90° Male/Straight Female M22	IP67/NEMA Type 4	1 (3.3)	284-MTRS22-M1D
		3 (9.8)	284-MTRS22-M3D
Extended Source/Control Brake Cable Patchcords			
90° Male/Straight Female M25	IP67/NEMA Type 4	1 (3.3)	285-BRC25-M1D
		3 (9.8)	285-BRC25-M3D
		4 (13.1)	285-BRC25-M4D
		6 (19.6)	285-BRC25-M6D
		8 (26.2)	285-BRC25-M8D
		10 (32.8)	285-BRC25-M10D
		12 (39.4)	285-BRC25-M12D
		14 (45.9)	285-BRC25-M14D
		20 (65.6)	285-BRC25-M20D
Receptacle			
Straight Male with wire	IP67/NEMA Type 4	0.5 (1.6)	285-M25M-M05

Three-Phase Power Field-Installed Receptacles

Pin Count	Assembly Rating	Certifications	Cable Diameter	Female Cat. No.	Male Cat. No.
4-Pin	16 AWG, 600V, 10 A 14 AWG, 600V, 15 A	UL Listed UL 2237 (File No. E318496, Guide PVVA)	0.28…0.47 in.	280-FAM22F	280-FAM22M
	10 AWG, 600V, 25 A ❶		0.48…0.81 in.	280-FAM35F	280-FAM35M

❶ When used with Cat. No. 280-PWRM24_-M* [E,F,G,or H], use Cat. No. 280-FAM35* and the corresponding mating receptacle 280-M35F-M* .

Sealing Caps





Description	EtherNet/IP	
	Input	Output
Plastic Sealing Cap (M12) ❶	1485A-M12	1485A-M12
Motor Connector Aluminum Sealing Cap (M22) for 10A protection*	—	1485A-C1
Motor Connector Aluminum Sealing Cap (M35) for 25A protection	—	889A-QMCAP
Dynamic Brake Connector (M22)	—	1485A-C1
Source/Control Brake Cap (M25)	—	280-BRCAP-M25

❶ To achieve IP67 rating, sealing caps must be installed on all unused I/O connections.

Handle and Cord Accessories

	Description	Cat. No.
	Locking Tag Padlock attachment to the lockable handles Up to three padlocks 4…8 mm (5/16 in. diameter) shackle	140M-C-M3
Cord Grips for use with CR/CRW Gland		
	Thomas & Betts Cord Grip 0.75in. Strain Relief Cord Connector, 0.75in. Lock Nut Cable Range: 0.31…0.56 in.	Thomas & Betts Part No. 2931NM
	Thomas & Betts Cord Grip 1 in. Strain Relief Cord Connector, 1 in. Lock Nut Cable Range: 0.31…0.56 in.	Thomas & Betts Part No. 2940NM
Cord Grips for use with DR/DRW Gland		
	Thomas & Betts Cord Grip 0.5 in. Strain Relief Cord Connector, 0.5 in. Lock Nut Cable Range: 0.5…0.75 in.	Thomas & Betts Part No. 2922NM
	Thomas & Betts Cord Grip 1 in. Strain Relief Cord Connector, 1 in. Lock Nut Cable Range: 0.70…0.95in.	Thomas & Betts Part No. 2942NM

Dynamic Braking Resistors

Sensorless Vector Control (SVC) Minimum Resistance and Recommended Modules for Option DB

Table 50 - Dynamic Brake Specification for Option DB (IP20 Resistor)

Drive and Motor Size kW [Hp]	Cat. No. ❶	Resistance Ohms ±5%	Continuous Power [kW]	Max Energy [kJ]	Max Braking Torque % of Motor	Application Type 1		Application Type 2	
						Braking Torque % of Motor	Duty Cycle %	Braking Torque % of Motor	Duty Cycle %
380…480 Volt AC Input Drives									
0.37 (0.5)	AK-R2-360P500	360	0.086	17	305%	100%	47%	150%	31%
0.75 (1)	AK-R2-360P500	360	0.086	17	220%	100%	23%	150%	15%
1.5 (2)	AK-R2-360P500	360	0.086	17	110%	100%	12%	110%	11%
2.2 (3)	AK-R2-120P1K2	120	0.26	52	197%	100%	24%	150%	16%
4 (5)	AK-R2-120P1K2	120	0.26	52	124%	100%	13%	124%	10%

❶ The resistors that are listed in this table are rated for 5% duty cycle.

Note 1: Always check resistor ohmic value against minimum resistance for drive being used.

Note 2: Duty cycle that is listed, is based on full speed to zero speed deceleration. For constant regen. at full speed, duty cycle capability is half of what is listed.

Application Type 1 represents maximum capability up to 100% braking torque where possible.

Application Type 2 represents more than 100% braking torque where possible, up to a maximum of 150%.

Note 3: Dynamic brake modules have an IP20 rating.



ATTENTION: Resistor temperature may exceed 200 °C (392 °F).



ATTENTION: AC drives do not offer protection for externally mounted brake resistors, especially in the case of brake IGBT failure. A risk of fire exists if external braking resistors are not protected. External resistor packages must be protected from over temperature or the protective circuit shown, or equivalent, must be supplied.

ArmorStart Bulletin 284 Option DB (IP20) Resistor Dimensions

Cat. No.	Weight [kg (lb)]
AK-R2-091P500, AK-R2-047P500, AK-R2-360P500	1.1 (2.5)
AK-R2-030P1K2, AK-R2-120P1K2	2.7 (6)

Dimensions are in millimeters (inches). Dimensions are not intended to be used for manufacturing purposes.

Figure 103 - Bulletin 284E Dynamic Brake Module Approximate Dimensions

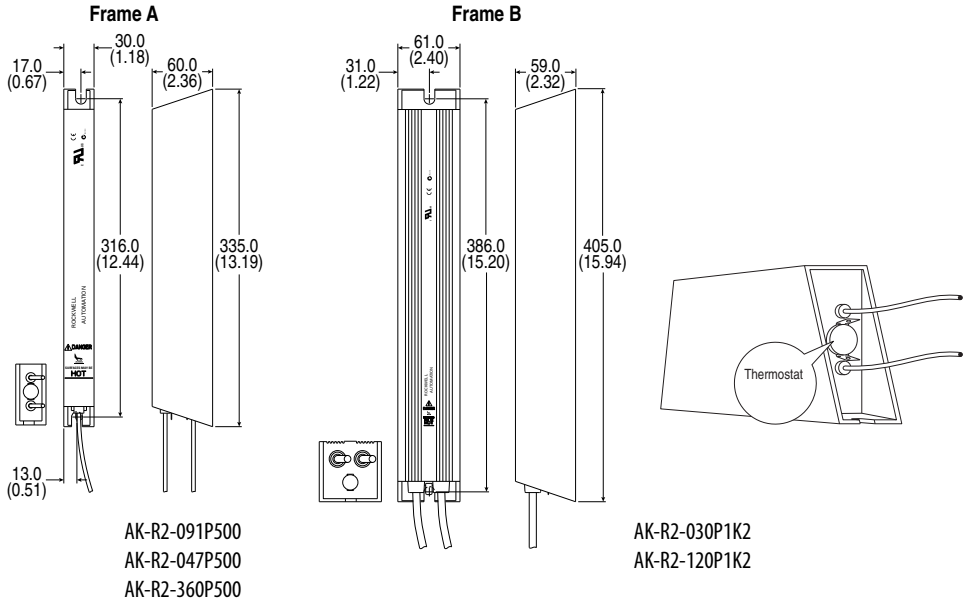

AK-R2-091P500
AK-R2-047P500
AK-R2-360P500

AK-R2-030P1K2
AK-R2-120P1K2

Recommended thermostat control wiring to prevent dynamic brake overheating.

Figure 104 - Thermostat Control Wiring

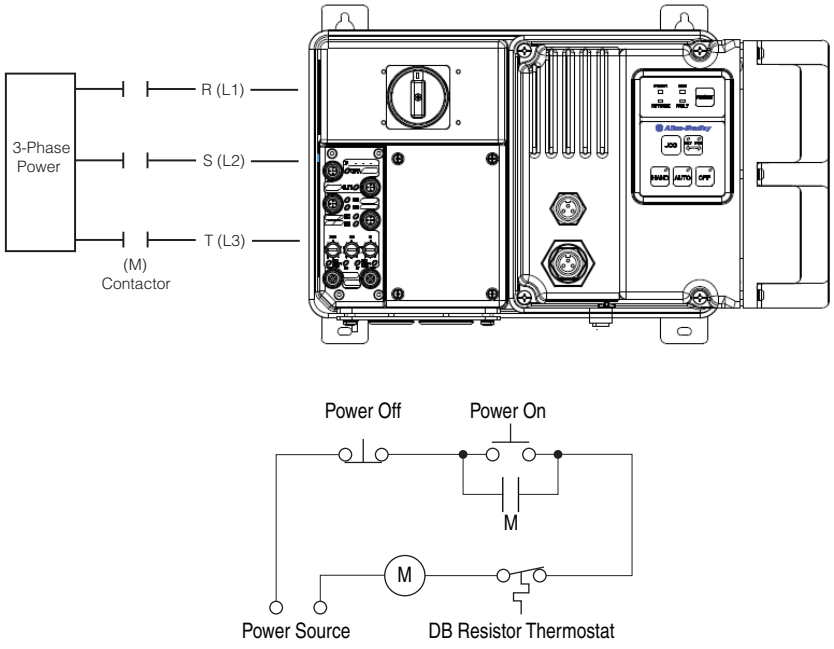

Sensorless Vector Control (SVC) Recommended Dynamic Brake Modules for Option DB1 (IP67 Resistor)

Drive and Motor Size kW	Cat. No. ❶	Resistance Ohms ± 5%	Continuous Power kW	Max Energy kJ	Max Braking Torque % of Motor	Application Type 1		Application Type 2	
						Braking Torque % of Motor	Duty Cycle %	Braking Torque % of Motor	Duty Cycle %
380…480 Volt AC Input Drives									
0.37 (0.5)	284R-360P500-M❷	360	0.086	17	305%	100%	47%	150%	31%
0.75 (1)	284R-360P500-M❷	360	0.086	17	220%	100%	23%	150%	15%
1.5 (2)	284R-360P500-M❷	360	0.086	17	110%	100%	12%	110%	11%
2.2 (3)	284R-120P1K2-M❷	120	0.26	52	197%	100%	24%	150%	16%
4 (5)	284R-120P1K2-M❷	120	0.26	52	124%	100%	13%	124%	10%

❶ Drive rating and DB part numbers are not interchangeable. Only use specified resistor. Customer is responsible to evaluate if performance meets application requirement.

❷ Length is user-selectable based on a suffix added to the catalog number. For a length of 500±10 mm, add **-M05** to the end of the catalog number. For a length of 1000±10 mm, add **-M1** to the end of the catalog number.

Note: Duty Cycle that is listed, is based on full speed to zero speed deceleration. For constant regen at full speed, duty cycle capability is half of what is listed.

Application Type 1 represents maximum capability up to 100% braking torque where possible.

Application Type 2 represents more than 100% braking torque where possible, up to a maximum of 150%.

Figure 105 - Bulletin 284 Dynamic Brake Resistor Approximate Dimensions

Dimensions are not intended to be used for manufacturing purposes.

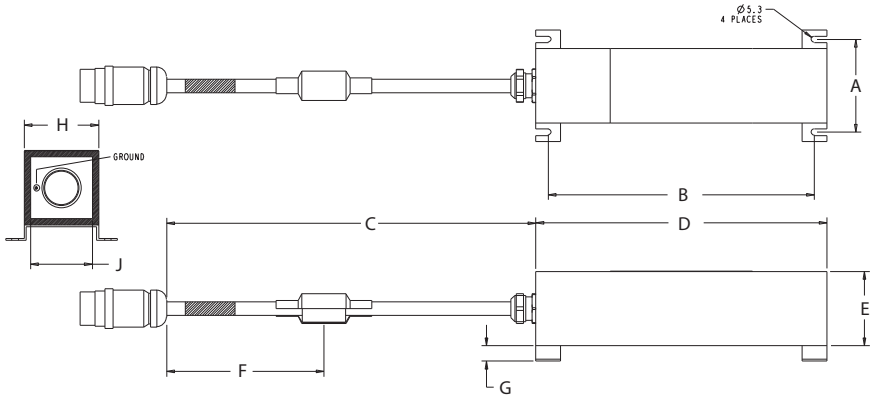

Cat. No.	A mm (in.)	B mm (in.)	C mm (in.)	D mm (in.)	E mm (in.)	F mm (in.)	G mm (in.)	H mm (in.)	J mm (in.)
284R-091P500	89 ± 3 (3.5 ± 0.12)	215 ± 5 (8.46 ± 0.2)	M05 = 0.5 m M1 = 1 m ❶	235 ± 5 (9.25 ± 0.2)	60 ± 2 (2.36 ± 0.08)	127 (5)	12.54 (0.49)	60 ± 2 (2.36 ± 0.08)	50 ± 1.5 (1.97 ± 0.06)
284R-120P1K2									
284R-120P1K2		420 ± 5 (16.54 ± 0.2)		440 ± 5 (17.32 ± 0.2)					

❶ Length is user-selectable based on the suffix added to the catalog number. For a length of 500 ±10 mm, add **-M05** to the end of the catalog number. For a length of 1000 ±10 mm, add **-M1** to the end of the catalog number.

Note: The customer must protect the resistor in the event of a shorted switch in the VFD. This is done via PLC control. An example ControlLogix program can be downloaded from http://samplecode.rockwellautomation.com

Applying More Than One ArmorStart Motor Controller in a Single Branch Circuit on Industrial Machinery

Introduction

In the general multiple-motor branch circuit case, installing a motor controller that is not listed for group installation, violates the NEC and NFPA 79.

Each ArmorStart motor controller is listed for group installation. This appendix explains how to use this listing to apply ArmorStart motor controllers in multiple-motor branch circuits.

Background

The NEC®is NFPA 70, National Electrical Code. NFPA 79 is the Electrical Standard for Industrial Machinery. The 2012 NEC refers to NFPA 79 in Article 670's first informational note.

Group installation means that a single set of fuses or a single circuit breaker protects a branch circuit that supplies two or more motors and their controllers. Both the NEC and NFPA 79 have rules for installing controllers in these multiple-motor branch circuits. Both also have special rules for controllers that are not listed for group installation and general rules for those that are.

The special rules for controllers that are not listed for group installation restrict some variables. These restricting rules are found in the NEC's 430.53(A), 430.53(B), and 430.53(C)(2)(b) and NFPA 79's 7.2.10.2, 7.2.10.3, and the 7.2.10.4(1) condition "...does not exceed that permitted by 7.2.10.1...". . For example, for 480V motors, the NEC's 430.53(A) limits each motor's rating to 1 Hp or less and the protective device rating to 15 amperes or less. The following will not address these special cases.

The following addresses this general case: if a motor controller is listed for group installation, the NEC and NFPA 79 permit (1) installing it in a branch circuit with other motors having any mix of horsepower ratings and (2) protecting all wiring and controllers with a single set of fuses or a single circuit breaker large enough to operate this mix of motors. The rules for this general case are found in the NEC's 430.53(C) and 430.53(D) and NFPA 79's 7.2.10.4 and 7.2.10.5.

For this general case, the following conclusions apply:

Importance of a motor controller being listed for group installation

- Unless a motor controller is listed for group installation, its listing covers only individual motor circuit installation, and installing it in a general multiple-motor circuit violates the NEC and NFPA 79.
- This listing is physically important because it ensures the controller's short circuit current rating is valid with the larger fuses and circuit breakers necessary to operate the multiple-motor circuit.
- If a motor controller is not listed for group installation, the installer must add fuses or a circuit breaker in each motor controller's input circuit.
- So, the group installation listing is important because it ensures the controller's short circuit current rating applies to the multiple-motor branch circuit and eliminates the requirement for the additional input circuit protective device(s).

From the perspective of the ArmorStart product family, being listed for group installation means one set of fuses or one circuit breaker may protect a branch circuit that has two or more of these motor controllers that are connected to it. This appendix refers to this type of branch circuit as a multiple-motor branch circuit. The circuit topology that is shown in Figure 106, is one configuration, but not the only possible configuration, of a multiple-motor branch circuit. In these circuits, a single set of fuses (or a single circuit breaker) protects multiple motors, their controllers, and the circuit conductors. The motors may be any mixture of power ratings and the controllers may be any mixture of motor controller technologies (magnetic motor controllers and variable-frequency AC drive controllers).

This appendix addresses only NFPA 79 applications. This is not because these products are only suitable for industrial machinery, but because industrial machinery is their primary market. In fact, while all versions of the ArmorStart products may be applied on industrial machinery, the versions that have the Conduit Entrance Gland Plate Option may also be used in applications governed by NFPA 70, National Electrical Code (NEC), (see “ArmorStart Product Family”).

Listing requirements for a “factory assembly” and “separate assemblies”

- The first sentence of the NEC's 430.53(C) relies on two terms that the NEC does not define: “”factory assembly” and “separate assemblies”. But the text also requires both to be “listed”: “listed factory assembly” or “separate assemblies listed for such use”. 45A of UL 508C contains the 430.53(C) listing requirements for drives. 52A of UL 508 contains the 430.53(C) listing requirements for contactor-based motor controllers. Neither contains the term “factory assembly” or the term “separate assemblies” and each requires this marking: “Suitable for motor group installation...”.
- Therefore, the terms “factory assembly” and “separate assemblies” do not change the listing requirements. All drives and contactor-based motor controllers that are listed for 430.53(C) installation are marked “Suitable for motor group installation...”.

In the 2012 Edition of NFPA 79, motor controllers that are listed for group installation may be installed in multiple-motor branch circuits according to either of two alternative sets of requirements. The first is found in 7.2.10.4(2), the second in 7.2.10.4(3). The requirements of 7.2.10.4(3) are similar to those in 430.53(C) of NFPA 70, while the requirements of 7.2.10.4(2) are found only in NFPA 79. This appendix explains the requirements of 7.2.10.4(2), rather than those of 7.2.10.4(3), because this is the simpler method to use when applying the ArmorStart family of motor controllers.

The user must determine the requirements – NFPA 79 or NFPA 70 – to use for the application. When making this determination, it is necessary to understand the ArmorStart product characteristics and useful to understand the definition of industrial machinery. The section of this appendix, “ArmorStart Product Family”, specifies whether a motor controller is suitable for installation according to NFPA 79 or NFPA 70 (or both). The definition of industrial machinery is found in 3.3.56 of NFPA 79 and 670.2 of Article 670, Industrial Machinery, in NFPA 70.

These conventions are used throughout this appendix. First, although all equipment is connected to a three-phase electrical supply, all figures are shown as one-line diagrams. Second, although all ArmorStart motor controllers are listed for group installation with both fuses and a specific family of inverse time circuit breakers, this appendix considers only fuses. This is done to avoid repetitive explanations with minor, but necessary qualifications, for circuit breakers. Generally, the principles for selecting the fuses also apply to selecting inverse time circuit breakers. Third, all references, unless indicated otherwise, are to NFPA 79 – 2012.

Note: The following example uses an ArmorStart LT circuit. This provides a more comprehensive example,

Figure 106 - ArmorStart LT NFPA 79 Multi-Motor Branch Circuit

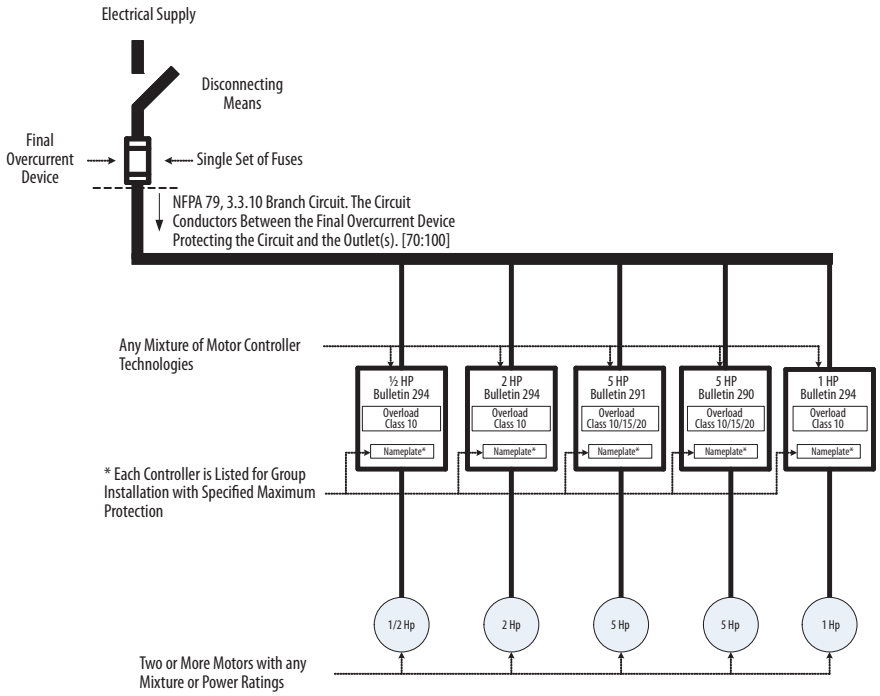

ArmorStart Product Family

This section contains a brief description of the attributes of the ArmorStart LT motor controllers that are relevant to applying them in multiple-motor branch circuits. These same relative attributes are can be assumed for ArmorStart. controllers

The term motor controller refers to the device that stops and starts the motor. The ArmorStart product family consists of two types of motor controllers. The Bulletin 290 and 291 controllers are magnetic motor controllers that use an electromechanical contactor to stop and start the motor. The Bulletin 294 motor controllers use a variable-frequency AC drive to stop, start and vary the speed of the motor. This appendix refers to the Bulletin 290, 291 and 294 products as either motor controllers or just controllers.

Each ArmorStart motor controller incorporates an integrated overload relay and motor disconnecting means. The Underwriters Laboratories' (UL) listing for each motor controller confirms that the motor controller – including its integral overload relay and motor disconnecting means — is suitable for motor group installation.

The suitability of each ArmorStart LT motor controller for installation according to either NFPA 79 or NFPA 70 depends on the means of connecting the power circuit wiring. All controllers are suitable for installation in multiple-motor branch circuits on industrial machinery according to 7.2.10.4 of NFPA 79. The controllers that have the Conduit Entrance Gland Plate Option are also suitable for installation in multiple-motor branch circuits according to 430.53(C) and 430.53(D) of NFPA 70 (NEC). The controllers that have the Power Media Gland Plate Option are suitable for installation only on industrial machinery. These versions are limited to industrial machinery because the UL listing for the power media connectors themselves and their matching cable assemblies covers installation only on industrial machinery.

Multiple-Motor Branch Circuits and Motor Controllers Listed for Group Installation – General

Multiple-motor branch circuits, like that shown in Figure 106, have this fundamental tradeoff: protecting more than one controller with a single set of fuses requires more electrical and mechanical robustness in each controller.

In exchange for eliminating the cost and space necessary for a dedicated set of fuses in front of each controller, the construction of each controller itself must be more robust. For the circuit configuration shown in Figure 106 to be practical, the ampere rating of the fuse must be large enough to operate all motors, without opening, under normal starting and running conditions. This rating of fuse must be larger than the rating permitted to protect a circuit that supplies only a single motor and its controller. In general, as the rating of the fuse increases, so does the magnitude of fault currents that flow until the fuse opens. This higher magnitude of fault current results in more damage to the controller. Therefore, the additional controller robustness is necessary to withstand these higher fault currents, without controller damage, that could result in a shock or fire hazard.

Consequently, to the controller, being listed for group installation mostly means the UL testing is performed with fuses that have this practical, and higher, ampere rating. This testing verifies that it is safe to apply this controller in a multiple-motor branch circuit, provided the fuse is of the same class and does not have a rating exceeding that marked on the controller.

The example in Figure 107, illustrates this increase in the maximum ampere rating of fuse that is permitted to protect a controller. This example compares the rating of the fuse used in the UL testing of two variable-frequency AC drive-based motor controllers. Both controllers have a rated power of 0.5 Hp and a rated output current of 1.5 A. The controller that is shown on the left is intended for installation in individual-motor branch circuits. The controller that is shown on the right is the ArmorStart LT Bulletin 294 controller that must be listed for group installation to be installed, as intended, in multiple-motor branch circuits. For this example, assume that all testing is done with fuses of the same class.

The UL investigation of both controllers is done according to UL 508C, Power Conversion Equipment. The controllers are connected to the test supply through the three-phase conductors and equipment grounding conductor and then covered with cotton in areas that are likely to vent hot gases and sparks during the tests. During the test, electrical faults are impressed on the output of, and internal to, these variable-frequency AC drive-based controllers. Increasing the ampere rating of the fuses increases the magnitude of the fault currents that flow through, and damage, the controller before the fuses open. Afterwards, the damage to the controller is evaluated to determine whether a potential shock or fire hazard exists when protected by fuses having this ampere rating. One criterion of the evaluation is the examination of the equipment grounding conductor that must not open during the test as this could leave exposed conductive parts in an energized state (shock hazard). Another criterion is that the cotton must not ignite as this indicates the expulsion from the controller of hot gases or molten metal fragments (fire hazard).

Referring to the controller on the left, UL 508C permits the individual-motor testing to be performed with the maximum rating of fuse that can be used to protect an individual-motor branch circuit. According to both NFPA 70 and NFPA 79, this is 400 percent of the full-load current rating of the largest motor that the controller can supply. In UL 508C, this is taken to be 400 percent of the rated output current of the controller, or 6 A.

Referring to the controller on the right, UL 508C permits the group installation testing to be performed with the maximum rating of fuse that can be used to protect a multiple-motor branch circuit. According to both NFPA 70 (430.53(C)) and NFPA 79 (7.2.10.4(3)), this is 250 amperes. This value, derived from the installation requirements of 430.53(C) and 430.53(D) of NFPA 70, is determined by the largest size of power conductor that the ArmorStart LT controller can accept, 10 AWG. Because the UL 508C test covers all possibilities in NFPA 70 and NFPA 79, it permits the maximum value of 250 amperes. This covers 7.2.10.4(2), which permits only 100 amperes. However, in this case, the manufacturer, Rockwell Automation, chose to test and mark with the lower value of 45 A. This value was chosen as the tradeoff between the maximum number and type of controllers in the branch circuit – limited by the maximum fuse rating - and the electrical and mechanical robustness engineered into each controller.

Therefore, to make its use in the multiple-motor branch circuit of Figure 106 practical, the 0.5 Hp, Bulletin 294 controller was engineered to be robust enough to safely contain the damage when protected by a fuse having a rating of 45 A, rather than just 6 A.

Figure 107 - UL508C Variable-Frequency AC Drive Motor Controller Evaluation

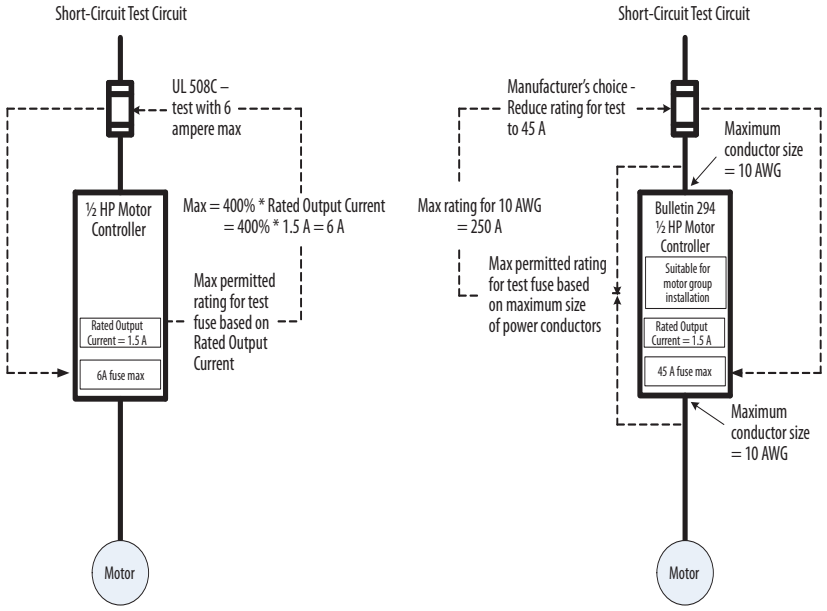

Maximum Fuse Ampere Rating According to 7.2.10.4(1) and 7.2.10.4(2)

This section uses Figure 108 to explain the requirements from 7.2.10.4(1) and 7.2.10.4(2) that are relevant to, and permit, the multiple-motor branch circuit of Figure 106.

The following is the complete text of 7.2.10.4(1) and 7.2.10.4(2) and an abbreviated version of Table 51 from the 2012 Edition of NFPA 79. The table is abbreviated to cover the size of conductors that are generally relevant to the ArmorStart LT motor controllers.

Complete Text

"7.2.10.4 Two or more motors or one or more motor(s) and other load(s), and their control equipment shall be permitted to be connected to a single branch circuit where short-circuit and ground-fault protection is provided by a single inverse time circuit breaker or a single set of fuses, provided the following conditions under (1) and either (2) or (3) are met:

(1) Each motor controller and overload device is either listed for group installation with specified maximum branch-circuit protection or selected such that the ampere rating of the motor branch short-circuit and ground-fault protective device does not exceed that permitted by 7.2.10.1 for that individual motor controller or overload device and corresponding motor load.

(2) The rating or setting of the branch short-circuit and ground-fault protection device does not exceed the values in Table 51 for the smallest conductor in the circuit."

(3) ...(not considered in this appendix)

Table 51 - Abbreviated Table 7.2.10.4

Table 7.2.10.4 Relationship Between Conductor Size and Maximum Rating or Setting of Short-Circuit Protective Device for Power Circuits Group Installations

Conductor Size (AWG)	Maximum Rating Fuse or Inverse Time* Circuit Breaker (amperes)
…	…
…	…
14	60
12	80
10	100
8	150
6	200
…	…

The following text and Figure 108 provide an explanation of 7.2.10.4(1) and (2). In the following, the text not relevant to Figure 106 is replaced by ellipsis points (...). Then each individual requirement is underlined and followed by an underlined letter in parentheses. This underlined letter in the following text corresponds to the letter in Figure 108.

"7.2.10.4 Two or more motors (a)...and their control equipment (b) shall be permitted to be connected to a single branch circuit (c) where short-circuit and ground-fault protection is provided by a single inverse time circuit breaker or a single set of fuses (d), provided the following conditions under (1) and...(2)...are met:

(1) Each motor controller and overload device is... listed for group installation with specified maximum branch-circuit protection (e) ...

(2) The rating or setting of the branch short-circuit and ground-fault protection device does not exceed the values in Table 7.2.10.4 for the smallest conductor in the circuit." (f)

Summarizing the requirements relevant to Figure 106: 7.2.10.4(1) and 7.2.10.4(2) permit two or more ArmorStart LT motor controllers to be installed in a single branch circuit provided (1) all motor controllers are listed for group installation, (2) the fuse does not exceed the maximum rating that Table 51 permits to protect the smallest conductor and (3) the fuse complies with the maximum fuse ratings of all controllers.

Figure 108 - ArmorStart LT NFPA 79 Multi-Motor Branch Circuit

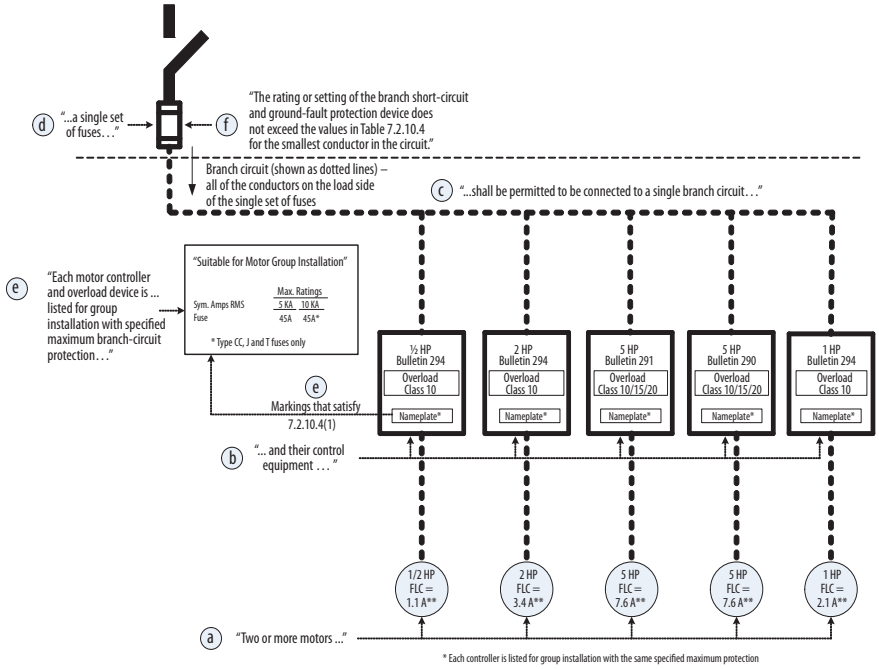

Explanatory Example

The example addresses the overcurrent protection of the conductors, controllers and motors. Protection for three overcurrent conditions is considered: motor running overloads, short-circuit (line-to-line) faults, and ground-faults (line-to-ground). The short-circuit fault and ground-fault protection is governed by 7.2.10.4(1) and 7.2.10.4(2) and explained in Requirements 1,2 and 3 and Figure 109. The overload protection, explained in Requirement 4, is governed by 7.3.1 and 7.3.1.1. Overload coordination depends on each conductor having the minimum ampacity given by 12.5.3 and 12.5.4. The method for determining this minimum ampacity is explained in Requirement 5 and Figure 110.

The example branch circuit is shown in Figure 109 and Figure 110. The circuit topology consists of a set of 10 AWG conductors that supply multiple sets of 14 AWG conductors. Each set of 14 AWG conductors supply a controller and motor. These conductor sizes are chosen to be the smallest conductors that have sufficient ampacity, without derating, for the loads each must carry. All wiring is customer-supplied, rather than the ArmorConnect Power Media, because all controllers have the Conduit Entrance Gland Plate Option. Fuses protect the branch circuit.

The example addresses five basic requirements that the motor controllers, fuses, and conductors must satisfy. The letters in the circles on Figure 109 and Figure 110 are referenced in the explanations as letters in parentheses. Ellipses points (...)
are used to replace NFPA 79 text that is not applicable to the multiple-motor branch circuit that is shown in Figure 109 and Figure 110. Unless indicated, all text is from NFPA 79.

Figure 109 - ArmorStart LT NFPA 79 Multi-Motor Branch Circuit — Conductor and Controller Protection

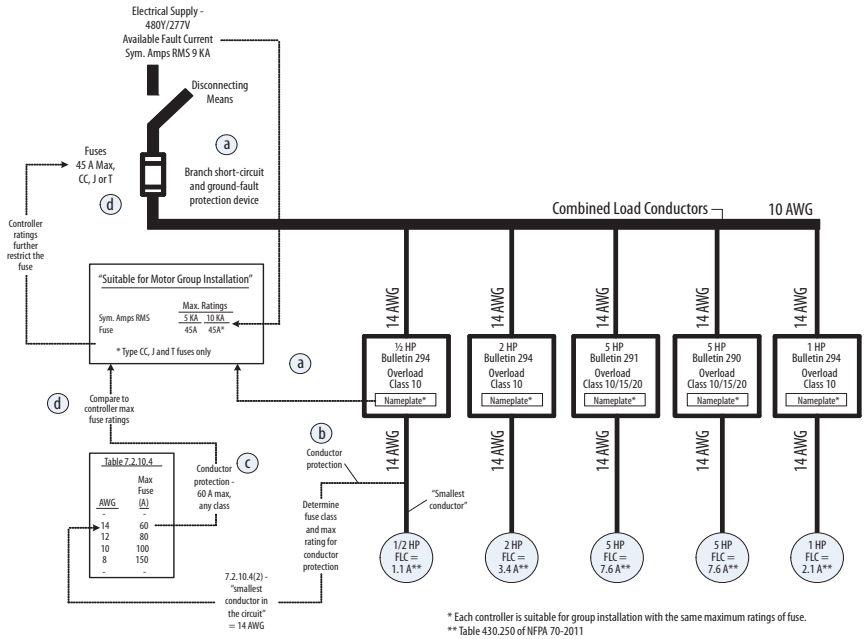

Figure 110 - ArmorStart LT NFPA 79 Multi-Motor Branch Circuit Minimum Conductor Ampacity

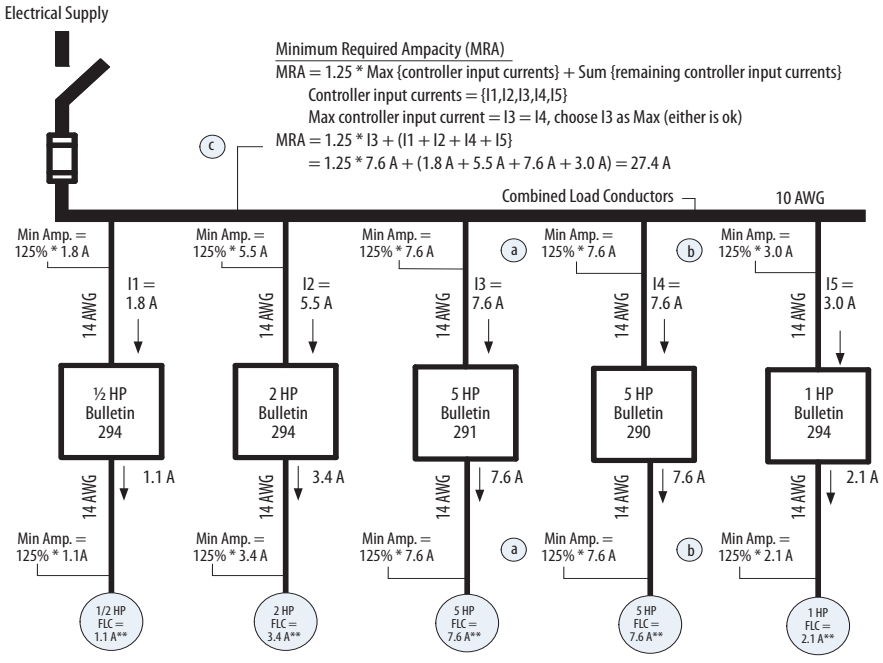

1. Requirement One: Controller Ratings — The motor controllers and overload relays must be listed for group installation with specified maximum branch-circuit protection.

Text: "7.2.10.4(1) Each motor controller and overload device is... listed for group installation with specified maximum branch-circuit protection..."

Analysis: To apply the ArmorStart LT motor controllers in the multiple-motor branch circuit that is shown in Figure 109, 7.2.10.4(1) must be satisfied; each controller must be listed for group installation with specified maximum branch-circuit protection. The UL listing for each ArmorStart LT motor controller confirms that it – including its integral overload relay and motor disconnecting means — is suitable for motor group installation with specified fuses, satisfying 7.2.10.4(1). The Bulletin 290E and 291E controllers are listed for group installation according to UL 508, Industrial Control Equipment. The Bulletin 294E controllers are listed for group installation according to UL 508C, Power Conversion Equipment.

Referring to Figure 110 (a) indicates the markings on the nameplate that satisfy 7.2.10.4(1). The marking "Suitable for Motor Group Installation" satisfies the requirement to be listed for group installation. The ratings that are located beneath the description "Max. Ratings" are the specified maximum branch circuit protection. The (a) beside the fuse(s) indicates that the maximum protection specified on the nameplate applies to these fuse(s).

2. Requirement Two: Conductor Short-circuit and Ground-Fault Protection — The fuse must protect the conductors for short-circuit faults and ground faults.

Text: "7.2.10.4(2) The rating or setting of the branch short-circuit and ground-fault protection device does not exceed the values in Table 51 for the smallest conductor in the circuit."

Analysis: Referring to Figure 109, 7.2.10.4(2) must be satisfied. The fuse, as indicated by the description in Figure 109 (a), is the branch short-circuit and ground-fault protection device. The word circuit means the branch circuit. The conductors of the branch circuit start at the load side of the fuses and end at the input to the motor, including the conductors between the motor controllers and the motor. The smallest conductor in the circuit is any one of the 14 AWG conductors that supply each controller and motor. The note at (b) indicates the conductor protection is based on the smallest conductor, 14 AWG. Referring to Table 51 a 14 AWG conductor may be used in a circuit that is protected by a fuse of any class having a rating of 60 amperes or less (c). Therefore, selecting a fuse of any class with a maximum rating of 60 amperes satisfies the conductor protection requirement of 7.2.10.4(2).

Supplementary Note 1: The value that is specified in Table 51 is the maximum rating of fuse that 7.2.10.4(2) permits to protect that size of conductor. The rating of the fuse may be set to the maximum value given by Table 51 for the smallest conductor without further justification. However, if any controller, or other component, has a maximum rating of fuse that is less than the Table 51 value, the maximum rating of the fuse protecting the branch circuit must be reduced to the lower value so that all components are applied according to their ratings. For example, as shown in Requirement Three, a lower value may be necessary to protect the motor controller within its ratings because its specified maximum protection is less than the rating that Table 51 permits for the smallest circuit conductor. Another reason to use a lower rating of fuse is to provide more conservative conductor and controller protection. However, in all cases it is important to ensure the ampere rating is sufficient to start and operate the motors without nuisance opening of the fuse(s).

Supplementary Note 2: The note at (b) points to the conductor on the output of the 0.5 Hp Bulletin 294E controller to emphasize that the smallest conductor in the circuit includes the conductors between each controller and motor. This includes the output of the variable-frequency AC drive-based Bulletin 294E controllers; even though these drives have electronic short-circuit protection. According to NFPA 79, the fuse, and not the drive's electronic short-circuit protection, provides the short-circuit fault and ground-fault protection for these output conductors.

Supplementary Note 3: Generally, connecting a smaller conductor to a larger conductor requires the installation of fuses at the connection. This connection may be made without this fuse, in some cases, by using a tap rule that indirectly protects the smaller conductor by limiting two things: the ratio of the ampacity of the larger conductor to the ampacity of the smaller conductor and the maximum length of the smaller conductor (see, for example, 7.2.8.2). When applying 7.2.10.4(2), such a tap rule is neither applicable nor necessary. In Figure 109, the smaller 14 AWG conductors may be connected to combined load conductors of any size because 7.2.10.4 does not indirectly protect the smaller conductor by limiting the ratio of the larger to smaller conductor ampacities and the conductor length. Instead, Table 51 protects the smallest conductor directly by specifying the maximum rating of fuse that may protect a branch circuit that contains a conductor of that size.

3. Requirement Three: Controller Short-Circuit and Ground-Fault Protection — Each motor controller must be protected according to its own ratings, that is, applied in accordance with its listing.

Text: "(1) Each motor controller and overload device is... listed for group installation with specified maximum branch-circuit protection..."

Analysis: See (d) in Figure 109. The characteristics of the fuse(s) permitted to protect the conductors (see Requirement 2) must now be compared to those in the controller's ratings. To comply with the listing of each motor controller and overload relay, the fuse(s) must comply with the maximum branch-circuit protection specified in the controller markings. Therefore, the fuse(s) must be of a class marked on all controllers and the rating of the fuse(s) must not exceed

the rating that is marked on any of the controllers. The markings of each controller specify that a fuse having a maximum rating of 45 A may protect the motor controller. When connecting to an electrical supply having an available fault current of 5000 A or less, the class of the fuse is not specified and may be any class. When connecting to an electrical supply having an available fault current from 5000 to 10000 A, the class of the fuse must be CC, J or T. Since the electrical supply has an available fault current of 9000 A, selecting a Class CC, J or T fuse with a rating of 45 A or less ensures each motor controller is applied within its own ratings.

Supplementary Note 1: The rating of the fuse must not exceed the rating that is permitted by 7.2.10.4(2) to protect the smallest conductor in the circuit. Selecting a Class CC, J or T fuse with a rating of 45 A, being less than 60 A, also protects the conductors (see Requirement 2). Although the ArmorStart LT products presently have a maximum fuse rating of 45 A, future controllers may have maximum fuse ratings that exceed 60 A. In this case, the maximum rating of fuse is limited by the rating to protect the 14 AWG conductors, 60 A. The maximum rating that is permitted for the controller, 45 A, is a maximum rating and can be reduced, for more conservative protection, provided nuisance opening of the fuses do not occur.

Supplementary Note 2: In this appendix, a fuse having a rating of any class means a fuse having the let-through characteristics of an Class RK-5 fuse. Class RK-5 fuses are assumed to have the maximum let-through of any class of fuse. For this reason, the ArmorStart LT motor controllers that are marked for use with fuses, without a restriction to a particular class, have been tested with and are intended to be used with fuses having a class of RK-5. Of course, fuses of a class that have lower let-throughs than Class RK-5, such as Class CC, J or T, are also acceptable. A fuse having a rating of any class also restricts the fuse to those that have been evaluated for use as branch-circuit protection devices. This means that semiconductor fuses, used to protect power electronic equipment, or supplemental fuses cannot be used to protect the multiple-motor branch circuit.

Supplementary Note 3: There are four complementary ratings relevant to the "specified maximum branch-circuit protection" of 7.2.10.4(1). They are: the fuse class, the maximum fuse rating, the voltage rating and connection of the source (480Y/277 V), and the available fault current of the source. Applying the controllers according to these four ratings means that a fault on the output of all controllers, and internal faults for Bulletin 294 controllers, will not result in a shock or fire hazard.

Supplementary Note 4: In this example, the assumption is made that the available fault current at the controller is that of the source on the line side of the fuses. Although it is true that the wiring impedance between the fuses and the first controller reduce the fault current available at the controllers, this reduction is neglected by assuming the first controller, the 0.5 Hp, Bulletin 294 controller, is very close to the fuses.

4. Requirement Four: Overload Protection — The motors, conductors and controllers must be protected against motor overload conditions.

Text:

"7.3.1 General. Overload devices shall be provided to protect each motor, motor controller, and branch-circuit conductor against excessive heating due to motor overloads or failure to start."

"7.3.1.1 Motors. Motor overload protection shall be provided in accordance with Article 430, Part III, of NFPA 70."

Analysis: Each ArmorStart LT motor controller incorporates an integral overload relay. This overload function must be set in accordance with Article 430, Part III of NFPA 70. Selecting the ampacity of the circuit conductors appropriately (see Requirement 5) ensures the overload relays, when set according to 7.3.1.1, will protect the conductors against overheating due to motor overloads.

Supplementary Note: Each individual controller overload relay directly protects the conductors that are connected to the input and output of that controller and the motor that the controller supplies. The combined load conductor is protected by the tripping of one or more of the controller overload relays, that remove(s) the overloaded motor(s) before the combined load conductor overheats.

5. Requirement: Conductor Ampacity —The minimum ampacity of conductors.

Text:

"12.5.3 Motor circuit conductors supplying a single motor shall have an ampacity not less than 125 percent of the motor full-load current rating."

"12.5.4 Combined load conductors shall have an ampacity not less than ... 125 percent of the full-load current rating of the highest rated motor plus the sum of the full-load current ratings of all other connected motors..."

Analysis: Referring to Figure 110, (a), (b) and (c) explain the method for calculating the minimum required conductor ampacity for each of these conductors: input and output conductors of Bulletin 290E and 291E controllers (a), input and output conductors of Bulletin 294E controllers (b) and combined load conductors that supply Bulletin 290E, 291E, and 294E controllers (c). The currents I1 through I5 are the input currents to the controllers. For the Bulletin 290E and 291E controllers, these are the same as the output motor currents. For the Bulletin 294E controllers, these currents are the rated input currents.

The example does not address conditions of use such as an ambient temperature exceeding 30 °C or more than three current-carrying conductors in a cable or raceway. In a particular application, these conditions of use may require derating of the ampacity that is given in Table 12.5.1. This example assumes that, under the conditions of use, both conductors have sufficient ampacity for the application. This means the 14 AWG conductors have an ampacity of no less than 9.5 A and the 10 AWG conductors have an ampacity of no less than 27.4 A.

Input and Output Conductors for Mechanical Controllers (a)

AmorStart models that use an electromechanical contactor to control the motor, the input current like the output current, is just the current to the motor. Therefore, the minimum conductor ampacity for both input and output conductors is 125 percent of the motor full-load current rating, as specified in the text of 12.5.3 (a).

Referring to Figure 110, the full-load current rating of a three-phase, 460 V, 5 Hp induction motor is 7.6 A. Using this value, both the input and output conductors must have an ampacity that is not less than 125% of 7.6 A or 9.5 A.

Input and Output Conductors for Variable Frequency Drives (b)

ArmorStart models that are a variable-frequency AC drive, are used to control the motor. These drives use a power conversion method that generates input currents that are larger than the output currents. The input currents are larger because, unlike the output currents to the motor, they are not sinusoidal. Consequently, when determining the minimum ampacity of the input conductors, the requirement of 12.5.3 must be based on the rated input current of the controller, rather than the full-load current rating of the motor. Therefore, the minimum ampacity of the input conductors must be 125% of the controller rated input current, while that of the output conductors must be 125% of the motor full-load current rating.

Referring to Figure 110, the 1 Hp Bulletin 294E controller has a rated input current of 3.0 A. Using the rated input current, the conductors from the combined load conductors to the controllers must have an ampacity of 125% of 3.0 A or 3.75 A. The output conductors must have an ampacity of 125% of 2.1 A or 2.6 A.

Combined Load Conductors (c)

The requirement for the minimum ampacity of the combined load conductors is given by 12.5.4. When the combined load conductors supply one or more Bulletin 294E controllers, the minimum ampacity calculation of 12.5.4 must be made by substituting the rated input current of the Bulletin 294E controllers for the full-load current rating of the motors that these controllers supply.

In Figure 110, the currents I1, I2, I3, I4, and I5 are the input currents to each controller. I3 and I4 are the full-load current ratings of the 5 Hp motors. I1, I2 and I5 are the rated input currents of the Bulletin 294E controllers. Referring to the explanatory text (c) in Figure 110, the method for calculating the minimum ampacity of the combined load conductors follows: first, multiply the largest input current to any controller – Bulletin 290E, 291E or 294E - by 125%. In this case, the input currents to the Bulletin 290E and 291E controllers, I3 and I4, are the largest, 7.6 A. Because they are the same, either can be used. Choose I3 to calculate 125% of the maximum. 125% of 7.6 A is 9.5 A. Second, sum the remaining input currents (I1, I2, I4, I5) for a total of 17.9 A. Third, add the result from the first step to the result from the second for a total of 27.4 A. Finally, the minimum ampacity of the combined load conductors is 27.4 A.

Supplementary Note 1: The input currents to the Bulletin 294E motor controllers are larger than the output currents to the motor because the input currents contain harmonics resulting from the power conversion process. This harmonic content and the magnitude of the resulting non-sinusoidal input currents depend on the impedance of the electrical supply. The value that is specified for the rated input current is the maximum value over the range of possible supply impedances. For this reason, the magnitude of current measured on a particular electrical system may be less than the specified value.

CIP Information

High Level Product Description

The ArmorStart EtherNet/IP controller is an extension of the ArmorStart DeviceNet controller. Three product types are offered:

Bulletin Number	Distributed Starter Type
280E	DOL
281E	Reversing
284E	Inverter

Product Codes and Name Strings

The following table lists the product codes and name strings that will be added to the ArmorStart product family for EtherNet/IP.

Product Code (hex)	Product Code (decimal)	Identity Object Name String
0x91	145	ArmorStart Bulletin 280E 0.5…2.5 A 24V DC
0x92	146	ArmorStart Bulletin 280E 1.1…5.5 A 24V DC
0x93	147	ArmorStart Bulletin 280E 3.2…16 A 24V DC
0x9A	154	ArmorStart Bulletin 280E 0.3…1.5 A 24V DC
0xD1	209	ArmorStart Bulletin 281E 0.5…2.5 A 24V DC
0xD2	210	ArmorStart Bulletin 281E 1.1…5.5 A 24V DC
0xD3	211	ArmorStart Bulletin 281E 3.2…16 A 24V DC
0xDA	218	ArmorStart Bulletin 281E 0.3…1.5 A 24V DC
0x172	370	ArmorStart Bulletin 284E PF40 480V 0.5 Hp
0x174	372	ArmorStart Bulletin 284E PF40 480V 1 Hp
0x176	374	ArmorStart Bulletin 284E PF40 480V 2 Hp
0x177	375	ArmorStart Bulletin 284E PF40 480V 3 Hp
0x178	376	ArmorStart Bulletin 284E PF40 480V 5 Hp

CIP Explicit Connection Behavior

The ArmorStart controller allows run, jog and user outputs to be driven by connected explicit messages when no I/O connection exists, or when an I/O connection exists in the idle state, a single EtherNet/IP Class 3 explicit connection is allowed to send “explicit control” messages via an “Active Explicit” connection.

An EtherNet/IP Class 3 explicit connection becomes the “explicit control” connection when it becomes the first EtherNet/IP Class 3 explicit connection to send a “set” service to one of the following:

- The “value” attribute of any DOP instance (class code 0x09).
- The “data” attribute of any output (consumed) Assembly instance (class code 0x04).
- Attribute 3 or 4 of the Control Supervisor Object (class code 0x29).

EDS Files

Most of the information that is contained in the EDS (Electronic Data Sheet) files for the ArmorStart EtherNet/IP product line is able to be extracted via the network.

CIP Object Requirements

The following CIP objects are covered in the following subsections.

Class	Object
0x0001	Identity Object
0x0004	Assembly Object
0x0006	Connection Manager Object
0x0008	Discrete Input Point Object
0x0009	Discrete Output Point Object
0x000F	Parameter Object
0x0010	Parameter Group Object
0x001D	Discrete Input Group Object
0x001E	Discrete Output Group Object
0x0029	Control Supervisor Object
0x002C	Overload Object
0x0047	Device Level Ring Object
0x0048	QoS Object
0x0097	DPI Fault Object
0x0098	DPI Alarm Object
0x00B4	Interface Object
0x00F5	TCP/IP Interface Object
0x00F6	Ethernet Link Object

For convenience, all objects that are accessible via the EtherNet/IP port are included.

Identity Object

CLASS CODE 0x0001

The following class attributes are supported for the Identity Object:

Attribute ID	Access Rule	Name	Data Type	Value
1	Get	Revision	UINT	1
2	Get	Max Instance	UINT	9

Up to nine instances (Instance 1...9) of the Identity Object are supported. The following table shows what each instance represents, and what the revision attribute reports:

Instance	Name	Revision Attribute
1	EtherNet/IP Module	The firmware rev of the EtherNet/IP board main firmware.
2	EtherNet/IP Boot	The firmware rev of the EtherNet/IP board boot firmware.
3	FPGA	The rev of the FPGA program
4	Control Module	A coded revision reflecting the revision attribute of the other various identity object instances (excluding boot code). Major revisions are coded as: 0SSSMMMM • 0 = reserved by DeviceNet • SSS = Revision of Soft-start or inverter. Initial release = 0; We will be limited to support for 8 major revisions. • MMMM = Revision of Main ArmorStart board. Initial release = 1; We will be limited to support for 15 major revisions.
5	Main Control Board Operating System	The firmware rev of the Main ArmorStart board OS stored in flash memory.
6	Main Control Board Boot Code	The firmware rev of the Main ArmorStart board boot code stored in flash memory.
7	The Internal PF 40 Inverter	The firmware rev of the Inverter as read from the RS-485 connection.
8 ❶	MCB IIC Daughter Board	The firmware rev of the MCB IIC Daughter Board
9 ❶	BASE IIC Daughter Board	The firmware rev of the Base IIC Daughter Board

❶ These instance numbers assume the next available instance base on the unit configuration. (If the unit is a DOL (No Drive) and there is an MCB Daughter board present its instance number will be 7.)

IMPORTANT Attempts to access Attribute 10 of all DeviceNet Main Control Board instances are blocked. If Attribute 10 (Heartbeat Interval) is accessed, an "Attribute Not Supported" error will be generated.

Instance 1 of the Identity Object contains the following attributes:

Attribute ID	Access Rule	Name	Data Type	Value
1	Get	Vendor	UINT	1
2	Get	Device Type	UINT	22
3	Get	Product Code	UINT	Starter Rating specific
4	Get	Revision Major Revision Minor Revision	Structure of: USINT USINT	See table above.
5	Get	Status	WORD	Bit 0…0 = Not Owned; 1 = Owned by Master Bit 2…0 = Factory Defaulted; 1 = Configured Bit 8 - Minor Recoverable fault Bit 9 - Minor Unrecoverable fault Bit 10 - Major Recoverable fault Bit 11 - Major Unrecoverable fault
6	Get	Serial Number	UDINT	Unique number for each device
7	Get	Product Name String Length ASCII String	Structure of: USINT STRING	Product Code specific
8	Get	State	USINT	Returns the value "3 = Operational"
9	Get	Configuration Consistency Value	UINT	"Module FRS"
102 ❶	Get	Build Number	UDINT	Build number of EtherNet/IP Module firmware.

❶ Instance 1 only.

The following common services are implemented for Instance 1. Service requests to other instances are serviced through the bridge.

	Implemented for:		
Service Code	Class	Instance	Service Name
0x01	Yes	Yes	Get_Attributes_All
0x05	No	Yes	Reset
0x0E	Yes	Yes	Get_Attributes_Single

The Type 0 and 1 reset service types, reset the Control Module. The EtherNet/IP module performs the Type 0 or 1 reset on itself.

Assembly Object

CLASS CODE 0x0004

The following class attributes are supported for the Assembly Object:

Attribute ID	Access Rule	Name	Data Type	Value
1	Get	Revision	UINT	1

The following static Assembly instance attributes are supported for each Assembly instance.

Attribute ID	Access Rule	Name	Data Type	Value
1	Get	Number of Members in Member List	UINT	—
2	Get	Member List	Array of STRUCT	Array of CIP paths
		Member Data Description	UINT	Size of Member Data in bits
		Member Path Size	UINT	Size of Member EPATA in bytes
		Member Path	Packed EPATH	Logically encoded member name
3	Conditional	Data	Array of BYTE	—
4	Get	Size	UINT	Number of bytes in attribute 3
100	Get	Name String	STRING	—

The following services are implemented for the Assembly Object.

	Implemented for:		
Service Code	Class	Instance	Service Name
0x0E	Yes	Yes	Get_Attribute_Single
0x10	No	Yes	Set_Attribute_Single
0x18	No	Yes	Get_Member

I/O Assemblies

The following table summarizes the Assembly instances that are supported in the ArmrorStart EtherNet/IP product:

Instance	Type	Description
3	Consumed	Required ODVA Consumed Instance
52	Produced	Required ODVA Produced Instance
150	Produced	Default Bulletin 280E/281E Produced Assembly
151 ❶	Produced	Default Bulletin 284E Produced Assembly
162	Consumed	Default Consumed Instance for DOL and Reversing Starters
166 ❶	Consumed	Default Consumed Instance for Inverter type Starters
191	Consumed	Empty assembly for Input Only I/O Connection
192	Consumed	Empty assembly for Listen Only I/O Connection

❶ These assemblies are selectable on Inverter Type ArmorStart units only.

Instances 3 and 52 are required by the ODVA Motor Starter Profile. When used as an EtherNet/IP Class 1 connection point, the I/O data attribute is simply passed through the bridge.

Instance 3

This is the required output (consumed) assembly.

Instance 3 ODVA Starter								
Byte	**Bit 7**	**Bit 6**	**Bit 5**	**Bit 4**	**Bit 3**	**Bit 2**	**Bit 1**	**Bit 0**
0	—	—	—	—	—	—	—	Run Fwd

Instance 52

This is the required input (produced) assembly.

Instance 52 ODVA Starter								
Byte	**Bit 7**	**Bit 6**	**Bit 5**	**Bit 4**	**Bit 3**	**Bit 2**	**Bit 1**	**Bit 0**
—	—	—	—	—	—	Running	—	Fault

Instance 150

This is the default input (produced) assembly for Bulletin 280E, 281E starters.

Instance 150 "Starter Stat" - Default Status Assembly for Bulletin 280E, 281E Starters								
Byte	**Bit 7**	**Bit 6**	**Bit 5**	**Bit 4**	**Bit 3**	**Bit 2**	**Bit 1**	**Bit 0**
0	Reserved (AOP Tag name: {name}:I.Fault)							
1	Reserved (AOP Tag name: {name}:I.Fault)							
2	Reserved (AOP Tag name: {name}:I.Fault)							
3	Reserved (AOP Tag name: {name}:I.Fault)							
4	—	—	—	Ready	RunningReverse	RunningForward	WarningPresent	TripPresent
5	—	—	DisconnectClosed	Hand	In3	In2	In1	In0
6	Pt07DeviceOut	Pt06DeviceOut	Pt05DeviceOut	Pt04DeviceOut	Pt03DeviceOut	Pt02DeviceOut	Pt01DeviceOut	Pt00DeviceOut
7	Logic Enable	Pt14DeviceOut	Pt13DeviceOut	Pt12DeviceOut	Pt11DeviceOut	Pt10DeviceOut	Pt09DeviceOut	Pt08DeviceOut
8	Value of the parameter pointed to by “Parameter Int00DeviceOut Cfg” (low byte) - ProducedWord0Param							
9	Value of the parameter pointed to by “Parameter Int00DeviceOut Cfg” (high byte) - ProducedWord0Param							
10	Value of the parameter pointed to by “Parameter Int01DeviceOut Cfg” (low byte) - ProducedWord1Param							
11	Value of the parameter pointed to by “Parameter Int01DeviceOut Cfg” (high byte) - ProducedWord1Param							
12	Value of the parameter pointed to by “Parameter Int02DeviceOut Cfg” (low byte) - ProducedWord2Param							
13	Value of the parameter pointed to by “Parameter Int02DeviceOut Cfg” (high byte) - ProducedWord2Param							
14	Value of the parameter pointed to by “Parameter Int03DeviceOut Cfg” (low byte) - ProducedWord3Param							
15	Value of the parameter pointed to by “Parameter Int03DeviceOut Cfg” (high byte) - ProducedWord3Param							

Note: Byte 0 - 3 refers to PLC communication status. All 1s (bit high) indicates a connection fault (communication fault) exists or all 0s (bit low) connection is normal.

Instance 151

This is the default input (produced) assembly for Inverter Type Distributed Starters.

Produce Assembly - Instance 151 "Drive Status" - 284E Starters								
Byte	**Bit 7**	**Bit 6**	**Bit 5**	**Bit 4**	**Bit 3**	**Bit 2**	**Bit 1**	**Bit 0**
0	Reserved - {name}:I.Fault							
1	Reserved - {name}:I.Fault							
2	Reserved - {name}:I.Fault							
3	Reserved - {name}:I.Fault							
4	AtReference	Network ReferenceStatus	NetControlStatus	Ready	RunningReverse	RunningForward	WarningPresent	TripPresent
5	OutputContactor Status	BrakeContactor Status	DisconnectClosed	Hand	In3	In2	In1	In0
6	OutputFrequency (Low) (xxx.x Hz)							
7	OutputFrequency (High) (xxx.x Hz)							
8	Pt07DeviceOut	Pt06DeviceOut	Pt05DeviceOut	Pt04DeviceOut	Pt03DeviceOut	Pt02DeviceOut	Pt01DeviceOut	Pt00DeviceOut
9	LogicEnable	Pt14DeviceOut	Pt14DeviceOut	Pt13DeviceOut	Pt11DeviceOut	P10DeviceOut	Pt09DeviceOut	Pt08DeviceOut
10	Value of the parameter pointed to by "Parameter 13 Prod Assy Word 0" (low byte)" - Int00DeviceOut							
11	Value of the parameter pointed to by "Parameter 13 Prod Assy Word 0" (high byte)" - Int00DeviceOut							
12	Value of the parameter pointed to by "Parameter 14 Prod Assy Word 1" (low byte)" - Int01DeviceOut							
13	Value of the parameter pointed to by "Parameter 14 Prod Assy Word 1" (high byte)" - Int01DeviceOut							
14	Value of the parameter pointed to by "Parameter 15 Prod Assy Word 2" (low byte)" - Int02DeviceOut							
15	Value of the parameter pointed to by "Parameter 15 Prod Assy Word 2" (high byte)" - Int02DeviceOut							
16	Value of the parameter pointed to by "Parameter 16 Prod Assy Word 3" (low byte)" - Int03DeviceOut							
17	Value of the parameter pointed to by "Parameter 16 Prod Assy Word 3" (high byte)" - Int03DeviceOut							

Note: Byte 0 - 3 refers to PLC communication status. All 1s (bit high) indicates a connection fault (communication fault) exists or all 0s (bit low) connection is normal.

** Contactor	Reference
Contactor 1	Source Brake Contactor status
Contactor 2	Output Contactor status

Instance 162

This is the standard output (consumed) assembly with Network Inputs.

Instance 162 Default Consumed DOL and Reversing Starter

Byte	Bit 7	Bit 6	Bit 5	Bit 4	Bit 3	Bit 2	Bit 1	Bit 0
0	OutB	OutA	—	—	—	ResetFault	RunReverse	RunForward
1	Pt07DeviceIn	Pt06DeviceIn	Pt05DeviceIn	Pt04DeviceIn	Pt03DeviceIn	Pt02DeviceIn	Pt01DeviceIn	Pt00DeviceIn
2	Pt15DeviceIn	Pt14DeviceIn	Pt13DeviceIn	Pt12DeviceIn	Pt11DeviceIn	Pt10DeviceIn	Pt09DeviceIn	Pt08DeviceIn

Instance 166

This is the standard output (consumed) assembly for Inverter Type Distributed Starters with network inputs.

Instance 166 Consumed Inverter Type Starter with Network Inputs

Byte	Bit 7	Bit 6	Bit 5	Bit 4	Bit 3	Bit 2	Bit 1	Bit 0
0	Out B	Out A	—	JogReverse	JogForward	ResetFault	RunReverse	RunForward
1	DriveInput4	DriveInput3	DriveInput2	DriveInput1	DecelCtrl_1	DecelCtrl_0	AccelCtrl_1	AccelCtrl_0
2	FreqCommand (Low) (xxx.x Hz)							
3	FreqCommand (High) (xxx.x Hz)							
4	Pt07DeviceIn	Pt06DeviceIn	Pt05DeviceIn	Pt04DeviceIn	Pt03DeviceIn	Pt02DeviceIn	Pt01DeviceIn	Pt00DeviceIn
5	Pt15DeviceIn	Pt14DeviceIn	Pt13DeviceIn	Pt12DeviceIn	Pt11DeviceIn	Pt10DeviceIn	Pt9DeviceIn	Pt8DeviceIn

Connection Manager Object CLASS CODE 0x0006

The following class attributes are supported for the Connection Manager Object.

Attribute ID	Access Rule	Name	Data Type	Value
1	Get	Revision	UINT	1
2	Get	Max Instance	UINT	—
3	Get	Number of Instances	UINT	—
4	Get	Optional Attribute List	Array of UINT	—
6	Get	Max Number Class Attribs	UINT	—

Two Class 1 connections for I/O transfer are supported.

Six Class 3 explicit connections are supported.

The following instance attributes are supported:

Attribute ID	Access Rule	Name	Data Type	Value
1	Get/Set	Open Requests	UINT	Number of Forward Open service requests received.
2	Get/Set	Open Format Rejects	UINT	Number of Forward Open service requests that were rejected due to bad format.
3	Get/Set	Open Resource Rejects	UINT	Number of Forward Open service requests that were rejected due to lack of resources.
4	Get/Set	Open Other Rejects	UINT	Number of Forward Open service requests that were rejected for reasons other than bad format or lack of resources.
5	Get/Set	Close Requests	UINT	Number of Forward Close service requests received.
6	Get/Set	Close Format Requests	UINT	Number of Forward Close service requests that were rejected due to bad format.
7	Get/Set	Close Other Requests	UINT	Number of Forward Close service requests that were rejected for reasons other than bad format.
8	Get/Set	Connection Timeouts	UINT	Total number of connection timeouts that have occurred in connections that are controlled by this Connection Manager

The following services are implemented for the Connection Manager Object.

	Implemented for:		
Service Code	Class	Instance	Service Name
0E hex	Yes	Yes	Get_Attribute_Single
4E hex	No	Yes	Forward_Close
54 hex	No	Yes	Forward_Open

Class 1 Connections

Class 1 connections are used to transfer I/O data, and can be established to the assembly object instances. Each Class 1 connection establishes two data transports, one consuming and one producing. The heartbeat instances are used for connections that shall access only inputs. Class 1 uses UDP transport.

- Total numbers of supported Class 1 connections equals 2 (total for: exclusive owner + input only + listen only)
- Supported Actual Packet Interval (API): 2…3200 ms (Note that the minimum API can be higher if processor resources become a problem)
- T->O (Target to Originator) Connection type: point-to-point, multicast
- O->T (Originator to Target) Connection type: point-to-point
- Supported trigger type: cyclic, change-of-state

The producing instance can be assigned to multiple transports, using any combination of multicast and point-to-point connection types.

Only one Exclusive-owner connection are supported at each time. If there is already an Exclusive-owner connection that is established and an originator tries to establish a new Exclusive-owner connection an “Ownership conflict” (general status = 0x01, extended status = 0x0106) error code is returned.

For a connection to be established the requested data sizes must be an exact match of the connections points that the connection tries to connect to. If the requested and actual sizes don’t match, an “Invalid connection size” (general status = 0x01, extended status = 0x0109) error code will be returned.

Exclusive Owner Connection

This connection type is used for controlling the outputs of the module and shall not be dependent on any other condition. Only one exclusive owner connection can be opened against the module.

If an exclusive owner connection is already opened “Connection in use” (general status = 0x01, extend status = 0x0100) shall be returned an error code.

- Connection point O -> T shall be Assembly object, Instance 3, 162 or 166 (162 for product codes <= 0x100 only, 166 for product codes > 0x100 only).

- Connection point T -> O shall be Assembly object, Instance 52, 150 or 151 (150 for product codes <= 0x100 only, 151 for product codes > 0x100 only).

Listen Only Connection

This connection is dependent on another connection to exist. If that connection (exclusive owner or input only) is closed, the listen only connection shall be closed as well.

It is recommended that the originator sets the data size in the Forward_Open be zero.

- Number of supported listen only connections equals two (shared with exclusive owner and listen only connection).
- Connection point O -> T shall be Assembly object, Instance 192 (Listen only heartbeat)
- Connection point T -> O shall be Assembly object, Instance 52, 150 or 151 (150 for product codes <= 0x100 only, 151 for product codes > 0x100 only)

Class 3 CIP Connections

Class 3 CIP connections are used to establish connections to the message router. The connection is used for explicit messaging. Class 3 CIP connections use TCP connections.

- Three concurrent encapsulation sessions are supported
- Six concurrent Class 3 CIP connections are supported
- More than one Class 3 CIP connection per encapsulation session are supported
- Supported Actual Packet Interval (API): 100…10000 ms
- T->O Connection type: point-to-point
- O->T Connection type: point-to-point
- Supported trigger type: application

Discrete Input Point Object

CLASS CODE 0x0008

The following class attributes are currently supported for the Discrete Input Point Object:

Attribute ID	Access Rule	Name	Data Type	Value
1	Get	Revision	UINT	2
2	Get	Max Instance	UINT	4

Four instances of the Discrete Input Point Object are supported. All instances contain the following attributes.

Attribute ID	Access Rule	Name	Data Type	Value
3	Get	Value	BOOL	0 = OFF, 1 = ON
115	Get/Set	Force Enable	BOOL	0 = Disable, 1 = Enable
116	Get/Set	Force Value	BOOL	0 = OFF, 1 = ON

The following common services are implemented for the Discrete Input Point Object.

	Implemented for:		
Service Code	Class	Instance	Service Name
0x0E	Yes	Yes	Get_Attribute_Single
0x10	No	Yes	Set_Attribute_Single

Discrete Output Point Object CLASS CODE 0x0009

The following class attributes are supported.

Attribute ID	Access Rule	Name	Data Type	Value
1	Get	Revision	UINT	1
2	Get	Max Instance	UINT	4 or 10

Four instances of the Discrete Output Point Object are supported for DOL/Reverser units. Ten instances are supported for Drive units. The following table summarizes the DOP instances.

Instance	Name	Alternate Mapping	Description
1	Run Fwd Output	0029-01-03	Run Forward output. For all starter types, this output is hard wired from the ArmorStart CPU to the actuator.
2	Run Rev Output	0029-01-04	Run Reverse output. For all starter types, this output is hard wired from the ArmorStart CPU to the actuator.
3	User Output 1	None	These are the two ArmorStart user outputs for all starter types.
4	User Output 2	None	
5	Drive Input 1	None	These four instances exist for Inverter units only. They are drive the outputs on the main control board that are connected to Drive Inputs 1…4.
6	Drive Input 2	None	
7	Drive Input 3	None	
8	Drive Input 4	None	
9	Drive Jog Fwd	None	This instances exists for Inverter units only.
10	Drive Jog Rev	None	

All instances contain the following attributes.

Attribute ID	Access Rule	Name	Data Type	Value
3	Get	Value	BOOL	0 = OFF, 1 = ON
5	Get/Set	Fault Action	BOOL	0 = Fault Value attribute, 1 = Hold Last State
6	Get/Set	Fault Value	BOOL	0 = OFF, 1 = ON
7	Get/Set	Idle Action	BOOL	0 = Fault Value attribute, 1 = Hold Last State
8	Get/Set	Idle Value	BOOL	0 = OFF, 1 = ON
113	Get/Set ❶	Pr Fault Action	BOOL	0 = Pr Fault Value attribute, 1 = Ignore
114	Get/Set ❶	Pr Fault Value	BOOL	0 = OFF, 1 = ON
115	Get/Set	Force Enable	BOOL	0 = Disable, 1 = Enable
116	Get/Set	Force Value	BOOL	0 = OFF, 1 = ON
117	Get/Set	Input Binding	STRUCT: USINT Array of USINT	Size of Appendix I encoded path Appendix I encoded path NULL path means Attribute 3 drives the output. Otherwise, this is a path to a bit in the Bit Table.

❶ For DOP Instances 1, 2, 9 and 10, Attributes 113 and 114 have "Get" only access, and their values are always 0.

The following common services are implemented for the Discrete Output Point Object.

Service Code	Implemented for:		Service Name
	Class	Instance	
0x0E	Yes	Yes	Get_Attribute_Single
0x10	No	Yes	Set_Attribute_Single

Parameter Object

CLASS CODE 0x000F

The following class attributes are supported for the Parameter Object.

Attribute ID	Access Rule	Name	Data Type	Value
1	Get	Revision	UINT	—
2	Get	Max Instance	UINT	—
8	Get	Parameter Class Descriptor	WORD	—

The number of instances of the parameter object depend upon the type of Control Module that the EtherNet/IP board is connected to.

The following instance attributes are implemented for all parameter attributes.

Attribute ID	Access Rule	Name	Data Type	Value
1	Get/Set	Value	Specified in Descriptor	—
2	Get	Link Path Size	USINT	—
3	Get	Link Path	Array of: BYTE EPATH	—
4	Get	Descriptor	WORD	—
5	Get	Data Type	EPATH	—
6	Get	Data Size	USINT	—
7	Get	Parameter Name String	SHORT_STRING	—
8	Get	Units String	SHORT_STRING	—
9	Get	Help String	SHORT_STRING	—
10	Get	Minimum Value	Specified in Descriptor	—
11	Get	Maximum Value	Specified in Descriptor	—
12	Get	Default Value	Specified in Descriptor	—
13	Get	Scaling Multiplier	UINT	—
14	Get	Scaling Devisor	UINT	—
15	Get	Scaling Base	UINT	—
16	Get	Scaling Offset	INT	—
17	Get	Multiplier Link	UINT	—
18	Get	Divisor Link	UINT	—
19	Get	Base Link	UINT	—
20	Get	Offset Link	UINT	—
21	Get	Decimal Precision	USINT	—

The following services are implemented for the Parameter Object.

	Implemented for:		
Service Code	Class	Instance	Service Name
0x01	No	Yes	Get_Attribute_All
0x0E	Yes	Yes	Get_Attribute_Single
0x10	No	Yes	Set_Attribute_Single
0x4b	No	Yes	Get_Enum_String

Parameter Group Object

CLASS CODE 0x0010

The following class attributes are supported for the Parameter Object.

Attribute ID	Access Rule	Name	Data Type	Value
1	Get	Revision	UINT	—
2	Get	Max Instance	UINT	—

The following instance attributes are supported for all parameter group instances.

Attribute ID	Access Rule	Name	Data Type	Value
1	Get	Group Name String	SHORT_STRING	—
2	Get	Number of Members	UINT	—
3	Get	1st Parameter	UINT	—
4	Get	2nd Parameter	UINT	—
n	Get	Nth Parameter	UINT	—

The following common services are implemented for the Parameter Group Object.

	Implemented for:		
Service Code	Class	Instance	Service Name
0x01	Yes	Yes	Get_Attribute_All
0x0E	Yes	Yes	Get_Attribute_Single

Discrete Input Group Object CLASS CODE 0x001D

No class attributes are supported for the Discrete Input Group Object.

A single instance of the Discrete Input Group Object is supported and contains the following instance attributes.

Attribute ID	Access Rule	Name	Data Type	Value
3	Get	Number of Instances	USINT	4
4	Get	Binding	Array of UINT	List of DIP Instances
6	Get/Set	Off_On_Delay	UINT	—
7	Get/Set	Off_On_Delay	UINT	—

The following common services are implemented for the Discrete Input Group Object.

	Implemented for:		
Service Code	Class	Instance	Service Name
0x0E	No	Yes	Get_Attribute_Single
0x10	No	Yes	Set_Attribute_Single

Discrete Output Group Object CLASS CODE 0x001E

No class attributes are supported for the Discrete Output Group Object.

Instance 1 exists for all ArmorStart units. Instance 2 exists for drive units only.

Instances 1 contains the following instance attributes.

Attribute ID	Access Rule	Name	Data Type	Value
3	Get	Number of Instances	USINT	4 for DOL/Soft Starter 10 for Inverters
4	Get	Binding	Array of UINT	List of DOP Instances
6	Get/Set	Command	BOOL	0 = Idle, 1 = Run
104	Get/Set	Network Status Overrride	BOOL	0 = No Override (go to safe state) 1 = Override (run local logic)
105	Get/Set	Comm Status Overrride	BOOL	0 = No Override (go to safe state) 1 = Override (run local logic)

Instance 2 contains the following instance attributes.

Attribute ID	Access Rule	Name	Data Type	Value
3	Get	Number of Instances	USINT	4
4	Get	Binding	Array of UINT	5, 6, 7, 8
7	Get/Set	Fault Action	BOOL	0 = Fault Value Attribute, 1 = Hold Last State
8	Get/Set	Fault Value	BOOL	0 = OFF, 1 = On
9	Get/Set	Idle Action	BOOL	0 = Idle Value Attribute, 1 = Hold Last State
10	Get/Set	Idle Value	BOOL	0 = OFF, 1 = On
113	Get/Set	Pr Fault Action	BOOL	0 = Pr Fault Value Attribute, 1 = Ignore
114	Get/Set	Pr Fault Value	BOOL	0 = OFF, 1 = On

The following common services are implemented for the Discrete Output Group Object.

	Implemented for:		
Service Code	Class	Instance	Service Name
0x0E	No	Yes	Get_Attribute_Single
0x10	No	Yes	Set_Attribute_Single

Control Supervisor Object

CLASS CODE 0x0029

No class attributes are supported.

A single instance (Instance 1) of the Control Supervisor Object is supported and contains the following instance attributes.

Attribute ID	Access Rule	Name	Data Type	Value
3	Get/Set	Run 1	BOOL	These Run outputs also map to DOP Instances 1 and 2
4 ❶	Get/Set	Run 2	BOOL	—
7	Get	Running 1	BOOL	—
8 ❶	Get	Running 2	BOOL	—
9	Get	Ready	BOOL	—
10	Get	Tripped	BOOL	—
12	Get/Set	Fault Reset	BOOL	0->1 = Trip Reset
100	Get/Set	Keypad Mode	BOOL	0 = Maintained, 1 = Momentary
101	Get/Set	Keypad Disable	BOOL	0 = Not Disabled, 1= Disabled
115	Get	Warning Status	WORD	Bits 0…1 = Reserved Bit 2 = PL Warning (does not apply for Ethernet version) Bit 3 = Reserved Bit 4 = PR Warning (does not apply for Ethernet version) Bit 5 = CP Warning Bit 6 = I/O Warning Bit 7 = Reserved Bit 8 = PI Warning (does not apply for Ethernet version) Bit 9 = DN Warning Bits 10…12 = Reserved Bit 13 = HW Warning Bit 14 = Reserved Bit 15 = DB Warning
124	Get/Set	Trip Enable	WORD	Bit enumerated trip enable word
130	Get/Set	Trip Reset Mode	BOOL	0 = Manual, 1 = Auto
131	Get/Set	Trip Reset Level	USINT	0 = 100%, Default = 75
150 ❷	Get/Set	High Speed Ena	BOOL	0 = Disable, 1 = Enable
151	Get	Base Enclosure	WORD	Bit 0 = IP67 Bit 2 = PLe Cat 4 Bits 3…15 Reserved
152	Get	Base Options	WORD	Bit 0 = Output Fuse Bit 2 = CP Fuse Detect Bits 3…7 = Reserved Bit 8 = 10A Base Bit 9 = 25A Base Bit 10…15 = Reserved
153	Get	Wiring Options	WORD	Bit 0 = Conduit Bit 1 = Round Media Bit 2 = 28xG Gland Bits 3…15 = Reserved

Attribute ID	Access Rule	Name	Data Type	Value
154	Get	Starter Enclosure	WORD	Bit 0 = IP67 Bit 1 = NEMA 4x Bit 2 = 28xG PIe Cat4 Bits 3…15 Reserved
155	Get	Starter Options	WORD	Bit 0 = Full Keypad Bit 1 = Safety Monitor Bit 2 = Source Brake Bit 3 = CP Brake Bit 4 = Dynamic Brake Bit 5 = Output Contactor Bit 6 = EMI Filter Bit 7 = 0…10V Analog In Bit 8 = Fused Dyn Brake Bits 9…15 = Reserved
156	Get	Last Pr Trip	UINT	—
157 ❷	Get	DB Status	WORD	Bit 0 = DB Faulted Bit 1 = DB Overtemp Warning Bit 2 = DB On Bit 3 = DB Flt Reset Inhibit Bits 4…15 = Reserved
158 ❷	Get	DB Fault	WORD	Bit 0 = DB Overtemp Bit 1 = DB OverCurrent Bit 2 = DB UnderCurrent Bit 3 = DB Shorted Switch Bit 4 = DB Open Bit 5 = Reserved Bit 6 = DB Bus Voltage Link Open Bit 7 = Reserved Bit 8 = DB Comms Bits 9…15 = Reserved

❶ Reversing Starters and Inverter Starters only.
❷ Inverter Starters only

The following common services are implemented for the Control Supervisor Object.

Service Code	Implemented for: Class	Implemented for: Instance	Service Name
0x0E	No	Yes	Get_Attribute_Single
0x10	No	Yes	Set_Attribute_Single

Overload Object

CLASS CODE 0x002C

No class attributes are supported for the Overload Object.

A single instance (Instance 1) of the Overload Object is supported for DOL and Reversing Starters. Instance 1 contains the following instance attributes.

Attribute ID	Access Rule	Name	Data Type	Value
3	Get/Set	FLA Setting	BOOL	xxx.x amps
4	Get/Set	Trip Class	USINT	—
5	Get	Average Current	INT	xxx.x amps
7	Get	% Thermal Utilized	USINT	xxx% FLA
8	Get	Current L1	INT	xxx.x amps
9	Get	Current L2	INT	
10	Get	Current L3	INT	
190	Get/Set	FLA Setting Times 10	BOOL	xxx.xx amps
192	Get	Average Current Times 10	UINT	xxx.xx amps
193	Get	Current L1 Times 10	UINT	xxx.xx amps
194	Get	Current L2 Times 10	UINT	
195	Get	Current L3 Times 10	UINT	

The following common services are implemented for the Overload Object.

	Implemented for:		
Service Code	Class	Instance	Service Name
0x0E	No	Yes	Get_Attribute_Single
0x10	No	Yes	Set_Attribute_Single

Device Level Ring (DLR) Object

CLASS CODE 0x0047

The following class attributes are supported for the DLR Object.

Attribute ID	Access Rule	Name	Data Type	Value
1	Get	Revision	UINT	2

A single instance (Instance 1) are supported with the following instance attributes.

Attribute ID	Access Rule	Name	Data Type	Value
1	Get	Network Topology	USINT	0 = Linear, 1 = Ring
2	Get	Network Status	USINT	0 = Normal 1 = Ring Fault 2 = Unexpected Loop Detect 3 = Partial Network Fault 4 = Rapid Fault/Restore Cycle
10	Get	Active Supervisor Address	Struct of UDINT Array of 6 USINT	Ring Supervisor
12	Get	Capability Flags	DWORD	0x00000002

The following common services are implemented for the DLR Object.

	Implemented for:		
Service Code	Class	Instance	Service Name
0x01	Yes	Yes	Get_Attribute_All
0x0E	Yes	Yes	Set_Attribute_Single

Qos Object

CLASS CODE 0x0048

The following class attributes are supported for the QoS Object.

Attribute ID	Access Rule	Name	Data Type	Value
1	Get	Revision	UINT	1

A single instance (Instance 1) are supported and it contains the following instance attributes.

Attribute ID	Access Rule	Name	Data Type	Value
1	Set	802 1Q Tag Enable	USINT	0 = Disable (Default) 1 = Enable
4	Set	DSCP Urgent	USINT	Default = 55
5	Set	DSCP Scheduled	USINT	Default = 47
6	Set	DSCP High	USINT	Default = 43
7	Set	DSCP Low	USINT	Default = 31
8	Set	DSCP Explicit	USINT	Default = 27

The following common services are implemented for the QoS Object.

	Implemented for:		
Service Code	Class	Instance	Service Name
0x0E	Yes	Yes	Get_Attribute_Single
0x10	No	Yes	Set_Attribute_Single

DPI Fault Object

CLASS CODE 0x0097

The DPI Fault Object is implemented in the DeviceNet Main Control Board.

The following class attributes are supported:

Attribute ID	Access Rule	Name	Data Type	Value
1	Get	Class Revision	UINT	1
2	Get	Number of Instances	UINT	4
3	Get	Fault Cmd Write	USINT	0 = NOP, 1 = Clear Fault, 2 = Clear Flt Queue
4	Get	Fault Instance Read	UINT	The instance of the Fault Queue Entry containing information about the Fault that tripped the Device.
6	Get	Number of Recorded Faults	UINT	The number of Faults recorded in the Fault Queue.

Four instances of the DPI Fault Object are supported. Instance 1 is the most recent fault while 4 is the oldest. The have the following instance attributes:

Attribute ID	Access Rule	Name	Data Type	Value
0	Get	Full/All Info	Struct of:	—
—	—	Fault Code	UINT	See table below.
—	—	Fault Source	Struct of:	—
—	—	DPI Port Number	USINT	0
—	—	Device Object Instance	USINT	0x2c
—	—	B Fault Text	BYTE[16]	See table below.
—	—	Fault Time Stamp	Struct of:	—
—	—	Timer Value	ULDINT	—
—	—	Timer Description	WORD	—
—	—	Help Object Instance	USINT	—
—	—	Fault Data		—
1	Get	Basic Info	Struct of:	—
—	—	Fault Code	UINT	See table below.
—	—	Fault Source	Struct of:	—
—	—	DPI Port Number	USINT	0
—	—	Device Object Instance	USINT	0x2C
—	—	Fault Time Stamp	Struct of:	—
—	—	Timer Value	ULINT	—
—	—	Timer Description	WORD	—
3	Get	Help Text	STRING	See table below.

The following services are supported:

Service Code	Implemented for:		Service Name
	Class	Instance	
0x0E	Yes	Yes	Get_Attribute_Single
0x10	Yes	No	Set_Attribute_Single

The table below lists Fault Codes, Fault Text, and Fault Help Strings for DOL and Reversers.

Table 52 - Bulletin 280E, 281E

Fault Code	Fault Text	Help Text
1	Hdw Short Ckt	The built in 140M Circuit Breaker has tripped.
2	Sfw Short Ckt	The wire protection algorithm detected an unsafe current surge.
3	Motor Overload	Load has drawn excessive current that is based on trip class selected.
4	Fault 4	—
5	Phase Loss	Indicates missing supply phase. This fault can be disabled.
6	Fault 6	—
7	Fault 7	—
8	Fault 8	—
9	Fault 9	—
10	Fault 10	—
11	Fault 11	—
12	Fault 12	—
13	Control Pwr Loss	Indicates the loss of control power. This fault can be disabled.
14	Control Pwr Fuse	The Control Power Fuse has blown. Remove power and replace fuse.
15	Input Short	Flags a shorted sensor, input device, or input wiring mistake.
16	Output Fuse	The Output Fuse has blown. Remove all power and replace the fuse.
17	Over Temp	Indicates that the operating temperature has been exceeded.
18	Fault 18	—
19	Phase Imbalance	Indicates an imbalanced supply voltage.
20	Fault 20	—
21	A3 Power Loss	Unswitched (A3) Power was lost or dipped below the 12V DC threshold.
22	Internal Comm	Communication with an internal component has been lost.
23	Fault 23	—
24	Fault 24	—
25	Fault 25	—
26	Fault 26	—
27	MCB EEPROM	This is a major fault that renders the ArmorStart inoperable.
28	Base EEPROM	This is a major fault that renders the ArmorStart inoperable.
29	Fault 29	—

Table 52 - Bulletin 280E, 281E

Fault Code	Fault Text	Help Text
30	Wrong Base	The ArmorStart controller is connected to the wrong base type.
31	Wrong CTs	This is a major fault that renders the ArmorStart inoperable.
32	Fault 32	—
33	Fault 33	—
34	Fault 34	—
35	Fault 35	—
36	Fault 36	—
37	Fault 37	—
38	Fault 38	—
39	Fault 39	—
40	Unknown Fault	—
41	Fault 41	—
42	Fault 42	—
43	Fault 43	—
44	Fault 44	—
45	Fault 45	—

The table below lists Fault Codes, Fault Text, and Fault Help Strings for VFD units.

Table 53 Bulletin 284E

Fault Code	Fault Text	Help Text
1	Hdw Short Ckt	The built in 140M Circuit Breaker has tripped.
2	Fault 2	—
3	Motor Overload	The Load has drawn excessive current.
4	Drive Overload	150% load for 1 min. or 200% load for 3 sec. exceeded
5	Phase U to Gnd	A Phase U to Ground fault is detected between drive and motor.
6	Phase V to Gnd	A Phase V to Ground fault is detected between drive and motor.
7	Phase W to Gnd	A Phase W to Ground fault is detected between drive and motor.
8	Phase UV Short	Excessive current is detected between phases U and V.
9	Phase UW Short	Excessive current is detected between phases U and W.
10	Phase VW Short	Excessive current is detected between phases V and W.
11	Ground Fault	A current path to earth ground at one or more output terminals.
12	Stall	The drive is unable to accelerate the motor.
13	Control Pwr Loss	Indicates the loss of control power. This fault can be disabled.
14	Control Pwr Fuse	The Control Power Fuse has blown. Remove power and replace fuse.
15	Input Short	Flags a shorted sensor, input device, or input wiring mistake.
16	Output Fuse	The Output Fuse has blown. Remove all power and replace the fuse.
17	Over Temp	Indicates that the operating temperature has been exceeded.

Table 53 Bulletin 284E

Fault Code	Fault Text	Help Text
18	Heatsink OvrTmp	The Heatsink temperature exceeds a predefined value.
19	HW OverCurrent	The drive output current has exceeded the hardware limit.
20	SW OverCurrent	Programmed parameter 198 (SW Current Trip) has been exceeded.
21	A3 Power Loss	Unswitched (A3) Power was lost or dipped below the 12V DC threshold.
22	Internal Comm	Communication with the internal Power Flex drive has been lost.
23	Drive Comm Loss	The RS-485 port on the internal Power Flex stopped communicating.
24	Power Loss	Drive DC Bus Voltage remained below 85% of nominal bus voltage.
25	Under Voltage	DC Bus Voltage fell below the minimum value.
26	Over Voltage	DC Bus Voltage exceeded the maximum value.
27	MCB EEPROM	This is a major fault that renders the ArmorStart inoperable.
28	Base EEPROM	This is a major fault that renders the ArmorStart inoperable.
29	Drive EEPROM	The drive EEPROM checksum checks have failed.
30	Wrong Base	The ArmorStart controller is connected to the wrong base type.
31	Fan RMP	The internal cooling fan is not running properly.
32	Power Unit	A major failure has been detected in the drive power section.
33	Drive I/O Brd	A failure has been detected in the drive control and I/O section.
34	Restart Retries	Automatic fault reset and run retries exceeded.
35	Drive Aux In Flt	The drive auxiliary input interlock is open inside the ArmorStart.
36	Analog Input	(PF Fault Code 29)
37	Drv Param Reset	Internal Drive Parameters (Parameters > 100) have been defaulted.
38	SCV Autotune	The drive automatic tuning function was either aborted or failed.
39	Source Brake	The source brake fuse has blown. Remove power and replace fuse.
40	Unknown Fault	—
41	DB1 Comm	Communication with an internal DB1 board has been lost.
42	DB1 Fault	A fault has been detected with the operation of the Dynamic Brake.
43	DB Switch Short	The Dynamic Brake switch is shorted.
44	Fault 44	—
45 ❶	Incompatible COMM Device	The Software version of the Drive is not compatible with the ArmorStart.

❶ The Fault text for this error is not return by the device, and is only reported as “Fault 45”.

DPI Alarm Object

CLASS CODE 0x0098

The following class attributes are supported:

Attribute ID	Access Rule	Name	Data Type	Value
1	Get	Class Revision	UINT	1
2	Get	Number of Instances	UINT	4
3	Set	Alarm Cmd Write	USINT	0=NOP, 1=Clear Fault, 2=Clear Flt Queue
74	Get	Alarm Instance Read	UINT	The instance of the Fault Queue Entry containing information about the Fault that tripped the Device.
6	Get	Number of Recorded Faults	UINT	The number of Faults that are recorded in the Fault Queue.

Four instances of the DPI Alarm Object are supported with the following instance attributes. Instance 1 is the most recent fault while 4 is the oldest. See Table 52 on page 322 and Table 53 on page 323 above for fault codes.

Attribute ID	Access Rule	Name	Data Type	Value
0	Get	Full/All Info	Struct of:	—
—	—	Alarm Code	UINT	—
—	—	Alarm Source	Struct of:	—
—	—	DPI Port Number	USINT	—
—	—	Device Object Instance	USINT	—
—	—	Alarm Text	STRING	—
—	—	Alarm Time Stamp	Struct of:	—
—	—	Timer Value	ULINT	—
—	—	Timer Descriptor	WORD	—
—	—	Help Object Instance	USINT	—
—	—	Alarm Data	—	—
1	Get	Basic Info	Struct of:	—
—	—	Alarm Code	UINT	—
—	—	Alarm Source	Struct of:	—
—	—	DPI Port Number	USINT	—
—	—	Device Object Instance	USINT	—
—	—	Alarm Time Stamp	Struct of:	—
—	—	Timer Value	ULINT	—
—	—	Timer Descriptor	WORD	—
3	Get	Help Text	STRING	—

The following services are supported.

Service Code	Implemented for:		Service Name
	Class	Instance	
0x0E	Yes	Yes	Get_Attribute_Single
0x10	Yes	No	Set_Attribute_Single

The table below lists Warning Codes, Warning Text, and Warning Help Strings that do not match the fault text.

Fault Code	Fault Text	Help Text
101	IP67/4X Mismatch	The Base enclosure type does not match the Control Module enclosure type.
102	DB Terminal	A warning has been detected with the operation of the Dynamic Brake.

Interface Object

CLASS CODE 0x00B4

The following class attribute are supported.

Attribute ID	Access Rule	Name	Data Type	Value
1	Get	Revision	UINT	1 for DOL 2 for Inverters

A single instance (Instance 1) of the Interface Object is supported with the following instance attributes.

Attribute ID	Access Rule	Name	Data Type	Min/Max	Default	Description
7	Get/Set	Prod Assy Word 0	USINT (rev 1) UINT (rev 2)	—	1	Defines Word 0 of Assy 120
8	Get/Set	Prod Assy Word 1	USINT (rev 1) UINT (rev 2)	—	5	Defines Word 1 of Assy 120
9	Get/Set	Prod Assy Word 2	USINT (rev 1) UINT (rev 2)	—	6	Defines Word 2 of Assy 120
10	Get/Set	Prod Assy Word 3	USINT (rev 1) UINT (rev 2)	—	7	Defines Word 3 of Assy 120
13	Get/Set	Starter COS Mask	WORD	0 - 0xFFFF	0xFFFF	Change of state mask for starter bits
15	Get/Set	Autobaud Enable	BOOL	0 - 1	1	1= enabled, 0 = disabled
16	Get/Set	Consumed Assy	USINT	0 to 185	162 (VFD 166)	3, 162 (also for drives 166, 191, and 192)
17	Get/Set	Produced Assy	USINT	100 to 187	150 (VFD 151)	52, 150, 161 (also for drive 151)
19	Get/Set	Set To Defaults	BOOL	0 to 1	0	0 = No action, 1 = Reset
23	Get	I/O Produced Size	—	0 t0 20	—	—
24	Get	I/O Consumed Size	USINT	0 to 16	—	—
30	Get	DNet Voltage	UINT	—	—	DeviceNet Voltage
50	Get/Set	PNB COS Mask	WORD	0 to 0x00FF	0	Change of state mask for PNBs
64	Get/Set	Unlock Identity	USINT	—	0	Multiple Identity Object instances are unlocked when this attribute is set to the value 0x99.

The following common services are implemented for the Interface Object.

	Implemented for:		
Service Code	Class	Instance	Service Name
0x0E	No	Yes	Get_Attribute_Single
0x10	No	Yes	Set_Attribute_Single

TCP/IP Interface Object

CLASS CODE 0x00F5

The following class attributes are supported.

Attribute ID	Access Rule	Name	Data Type	Value
1	Get	Revision	UINT	1

One instance of the TCP/IP Interface Object are supported with the following instance attributes.

Attribute ID	Access Rule	Name	Data Type	Value
1	Get	Status	DWORD	—
2	Get	Configuration Capability	DWORD	0x00000014
3	Get/Set	Configuration Control	DWORD	0 = Configuration from NVS 2 = Configuration from DHCP
4	Get	Physical Link Object	Struct of UINT Padded EPATH	 2 words NULL Enet Link Object Instance
5	Get/Set	Interface Configuration	Struct of UDINT UDINT UDINT UDINT UDINT STRING	 IP Address Network Mask Gateway Address Primary DNS Secondary DNS Default Domain Name for not fully qualified host names
6	Get/Set	Host Name	STRING	—
8	Get/Set	TTL Value	USINT	Time to Live value for EtherNet/IP multicast packets
9	Get/Set	Multicast Config	Struct of USINT USINT UINT UDINT	 Allocation Control Reserved Number of multicast addresses to allocate (1…4) Multicast starting address.
11	Get/Set	LastConflictedDetected	Struct of	
		AcdActivity	USINT	State of last ACD Activity when last conflicted detected. Default = 0
		RemoteMAC	Array of 6 USINT	MAC address of a remote node from the ARP DPU in which a conflict was detected. Default = 0
		ArpPdu	Array of 28 USINT	Copy of raw ARP DPU in which a conflict was detected. Default = 0

The following common services are implemented for the TCP/IP Interface Object.

Service Code	Implemented for:		Service Name
	Class	Instance	
	No	Yes	Get_Attribute_All
0x0E	Yes	Yes	Get_Attribute_Single
0x10	No	Yes	Set_Attribute_Single

Ethernet Link Object

CLASS CODE 0x00F6

The following class attributes are supported.

Attribute ID	Access Rule	Name	Data Type	Value
1	Get	Revision	UINT	3
2	Get	Max Instance	UINT	2
3	Get	Number of Instances	UINT	2

One instance of the Ethernet Link Object are supported with the following instance attributes.

Attribute ID	Access Rule	Name	Data Type	Value
1	Get	Interface Speed	UDINT	10 or 100 Mbit/Sec
2	Get	Interface Flags	DWORD	See ENet/IP Spec
3	Get	Physical Address	ARRAY of 6 USINTs	MAC Address
4	Get	Interface Counters	Struct of: In Octets In Ucast packets In NUcast packets In Discards In Errors In Unknown Protos Out Octets Out Ucast packets Out NUcast packets Out Discards Out Errors	—
5	Get	Media Counters	Struct of: Alignment Errors FCS Errors Single Collisions SQE Test Errors Deferred Transmits Late Collisions Excessive Collisions MAC Transmit Errors Carrier Sense Errors Frame Too Long MAC Receive Errors	—
6	Get/Set	Interface Control	Struct of: Control Bits Forced Interface Speed	—
7	Get	Interface Type	USINT	—
8	Get	Interface State	USINT	—
9	Get/Set	Admin State	USINT	—
10	Get	Interface Label	SHORT_STRING	Instance 1: Port 1 Instance 2: Port 2

The following common services are implemented for the Ethernet Link Object.

Service Code	Implemented for:		Service Name
	Class	Instance	
0x01	No	Yes	Get_Attribute_All
0x0E	Yes	Yes	Get_Attribute_Single
0x10	No	Yes	Set_Attribute_Single

Using DeviceLogix

DeviceLogix is a stand-alone Boolean program that resides within the ArmorStart controller. The program is embedded in the product software so that there is no additional module that is required to use this technology. To program DeviceLogix, you need the latest AOP for ArmorStart EtherNet/IP for ControlLogix or other Logix family PLCs.

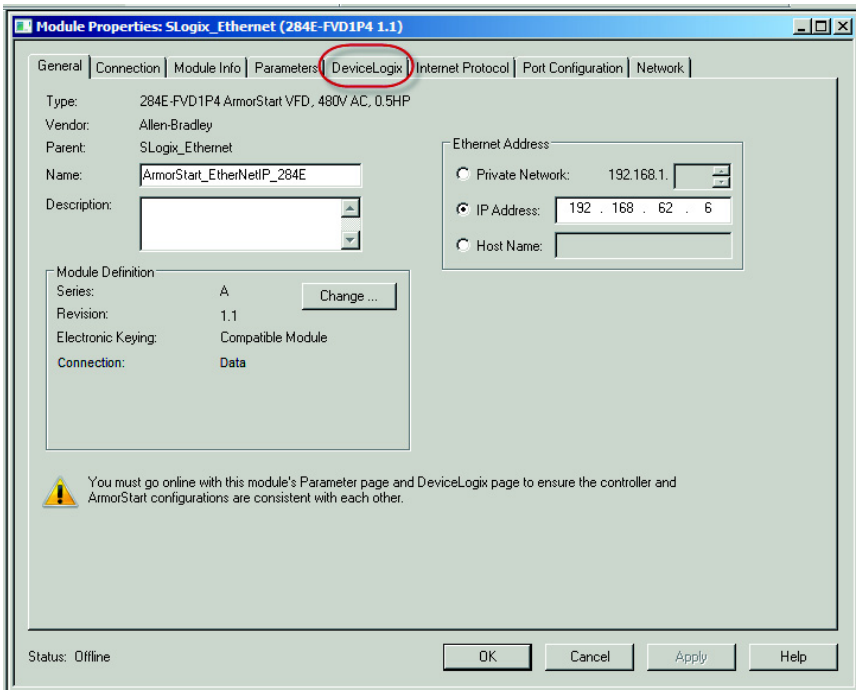

In addition to the actual programming, DeviceLogix can be configured to operate under specific situations. It is important to note that the DeviceLogix program only runs if the logic has been enabled. This can be done within the "Logic Editor." The operation configuration is accomplished by setting the "Network Override" and "Communication Override" parameters. The following information describes the varying levels of operation:

- If both overrides are disabled and the logic is enabled, the ONLY time DeviceLogix runs is if there is an active I/O connection with a master, i.e. the master is in Run mode. At all other times, DeviceLogix is running the logic, but does NOT control the state of the outputs.

- If the Network Override is enabled and the logic is enabled, then DeviceLogix controls the state of the outputs when the PLC is in Run mode and if a network fault such as Duplicate MAC ID or module Bus off condition occurs.

- If the Communications Override is enabled and the logic is enabled, the device does not need any I/O connection to run the logic. As long as there is control power and a DeviceNet power source that is connected to the device, the logic controls the state of the outputs.

- DeviceLogix provides a "Motion Disable" function that is driven from the DeviceLogix program. When this is active all motor run commands are disabled, including the HOA. The run command is disabled regardless of where the command is initiated from such as DeviceLogix or DeviceNet.

DeviceLogix Programming

DeviceLogix has many applications and the implementation is typically only limited to the imagination of the programmer. Keep in mind that the application of DeviceLogix is only designed to handle simple logic routines.

DeviceLogix is programmed using simple Boolean math operators such as AND, OR, NOT, timers, counters, and latches. Decision making is done by combining these Boolean operations with any of the available I/O. The inputs and outputs used to interface with the logic can come from the network or from the device hardware. Hardware I/O is the physical Inputs and Outputs that are on the device, such as push buttons and pilot lights that are connected to the ArmorStart.

There are many reasons to use the DeviceLogix functionality, but some of the most common are listed below:

- Increased system reliability
- Fast update times (1 - 2 ms possible)
- Improved diagnostics and reduced troubleshooting
- Operation independent of PLC or network status
- Continue to run process in the event of network interruptions
- Critical operations can be safely shut down through local logic

DeviceLogix Programming Example

The following example shows how to program a simple logic routine to interface the ArmorStart EtherNet I/P controller with a remote hard-wired startstop station. In this case, the I/O is wired as shown in Table 54.

Table 54 - Hardware Bit Assignments and Description for the ArmorStart

Input Table		Output Table	
Bit	**Description**	**Bit**	**Description**
In 0	Start Button	Run Forward	Contactor Coil
In 1	Stop Button	N/A	N/A
In 2	N/A	—	—
In 3	N/A	—	—

IMPORTANT Before programming logic, it is important to decide on the conditions under which the logic will run. As defined earlier, the conditions can be defined by setting parameter 8 (Network Override) and parameter 9 (Comm. Override) to the desired value.

1. While in the AOP, click the DeviceLogix tab. Click the Launch Editor button.

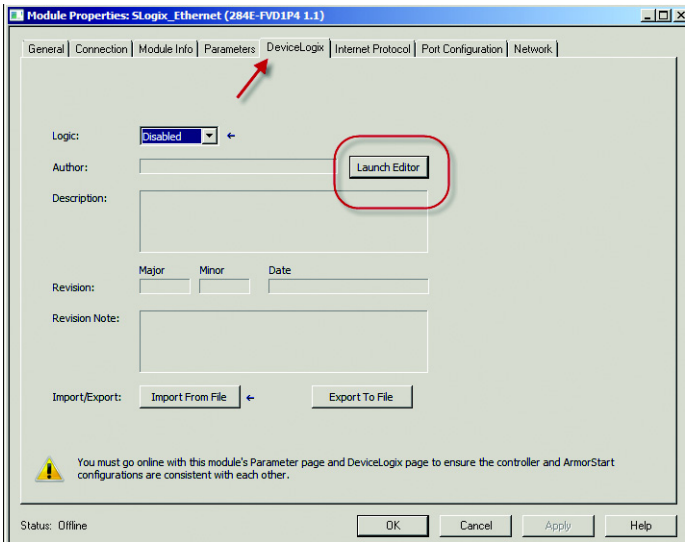

2. Select Function Block or Ladder editor. Note that once selected, you are not able to switch back without recreating the logic.

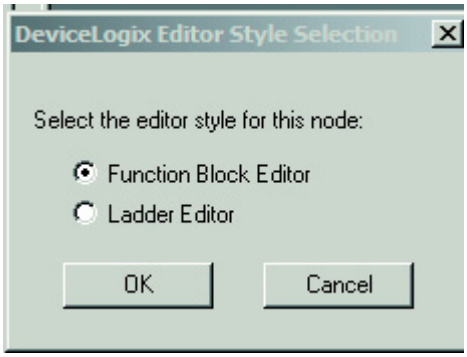

3. Refer to the tool bar at the top of the DeviceLogix editor window, click the Move/Logical group and select the RSTD (Latch Reset). Move it to the work space and click to drop it.

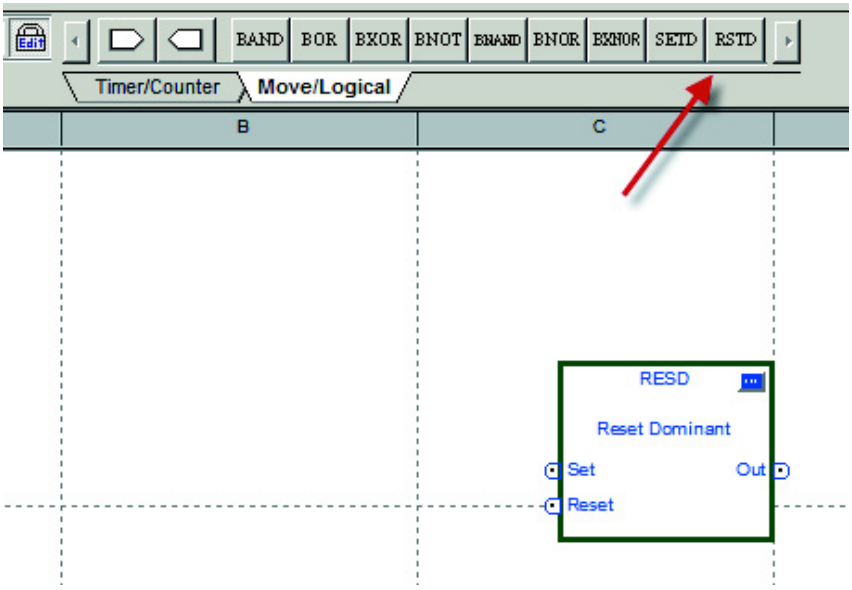

4. From the toolbar, Click the "**Bit Input**" button and select **In 0** from the Hardware Boolean tree. This is the remote start button based on the example I/O table.

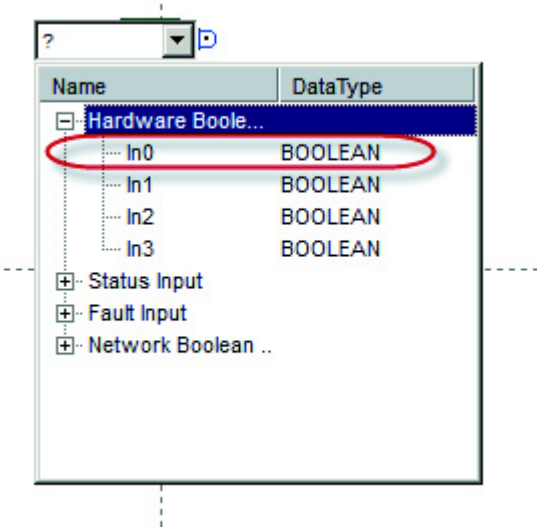

5. Place the input to the left of the reset function. To drop the input on the page, left click the desired position.
6. Place the mouse cursor over the tip of In 0. The tip turns green. Click the tip when it turns green.
7. Move the mouse cursor toward the Set input of the reset function. A line follows the cursor. When a connection can be made, the tip of the RSL function also turns green. Click the on Input and the line is drawn from In 0 to the Set Input of the reset function.

Note: If this was not a valid connection, one of the pin tips would have turned red rather than green. Left double-clicking the unused portion of the grid or pressing the "**Esc**" key at any time cancels the connection process.

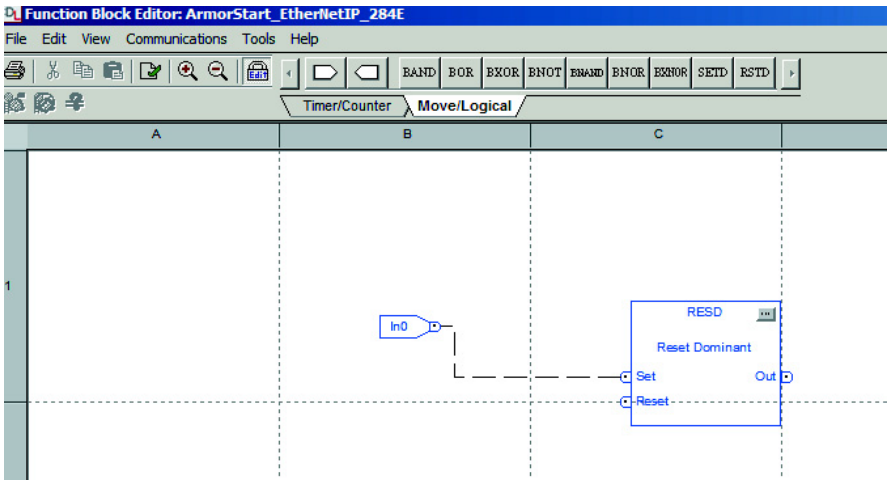

8. From the toolbar, Click the "**Bit Input**" button and select **In 1** from the pull-down menu. This is the remote stop button based on the example I/O table.
9. Place the input to the left of the reset function.
10. Connect the input to the reset input of the reset function.

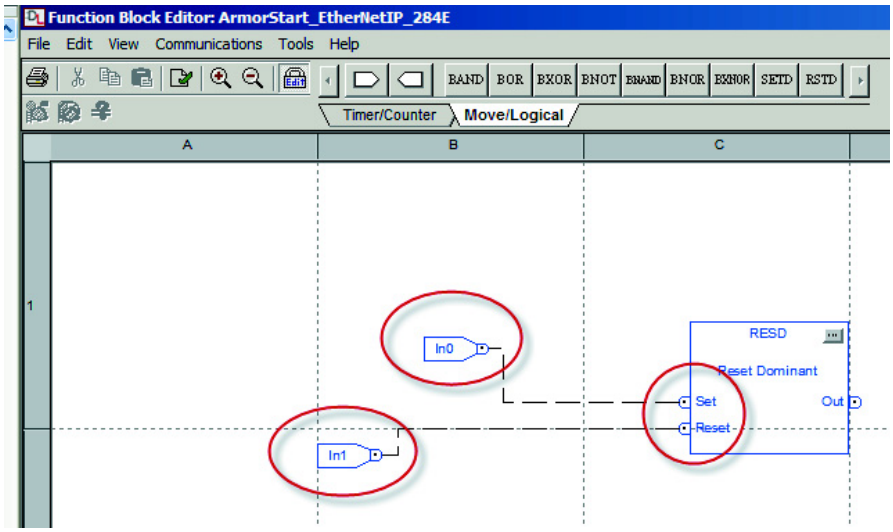

11. From the toolbar, Click the "**Bit Output**" button and select "**Run Forward"** from the hardware boolean tree. Run Forward is the relay controlling the coil of the contactor.

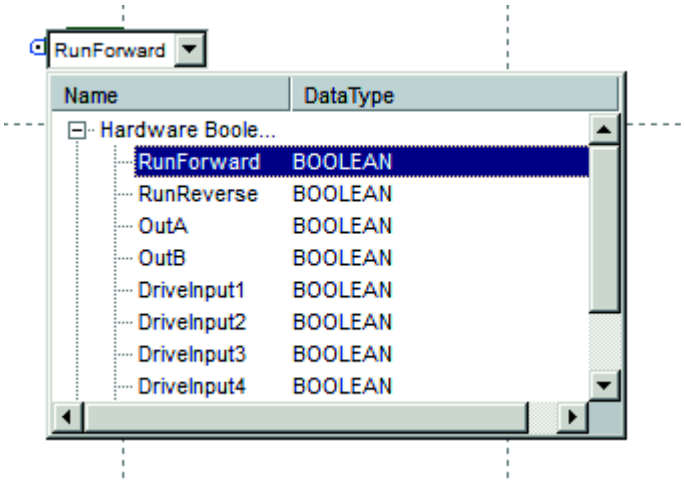

12. Move the cursor into the grid and place the Output to the right of the reset function block.

13. Connect the output of the reset function block to **Run Forward.**

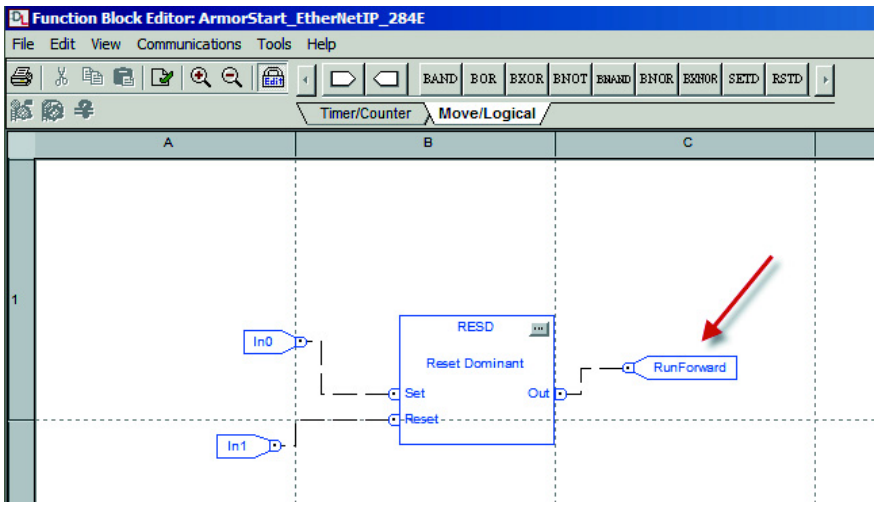

14. Click the "**Verify**" button that is located in the toolbar or select "Logic Verify" from the "Tools" pull-down menu.

15. Click file close. The program is not saved automatically. Fill in the information on following window and accept changes. This saves the program but has not been downloaded in the product.

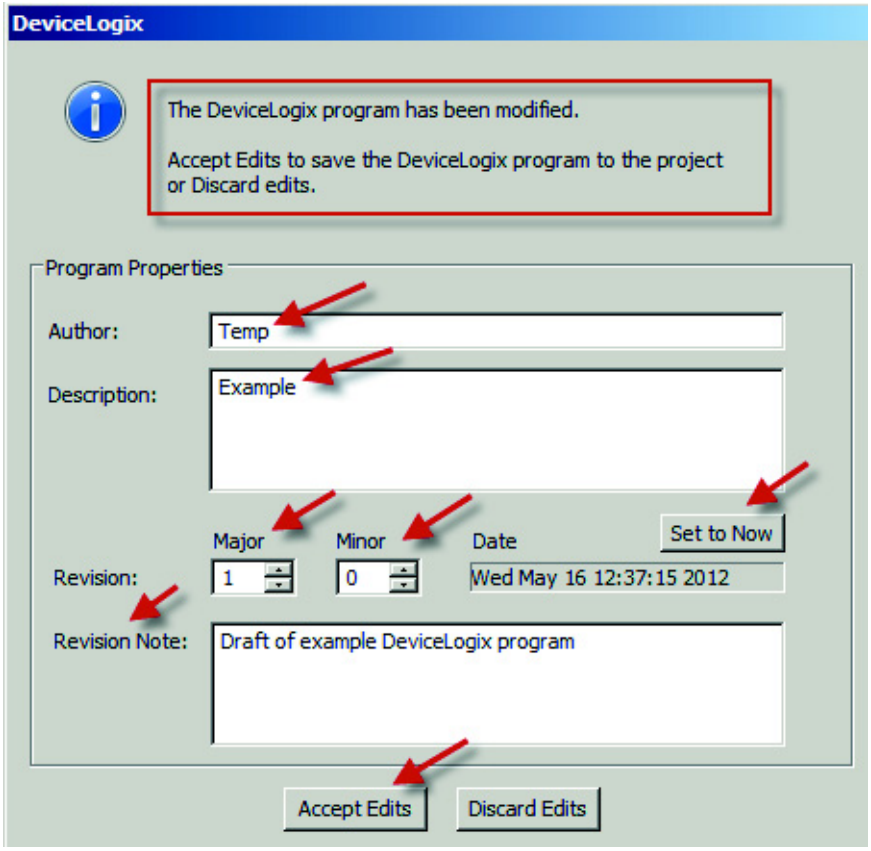

16. The last step is to enable the logic via the pull-down menu.

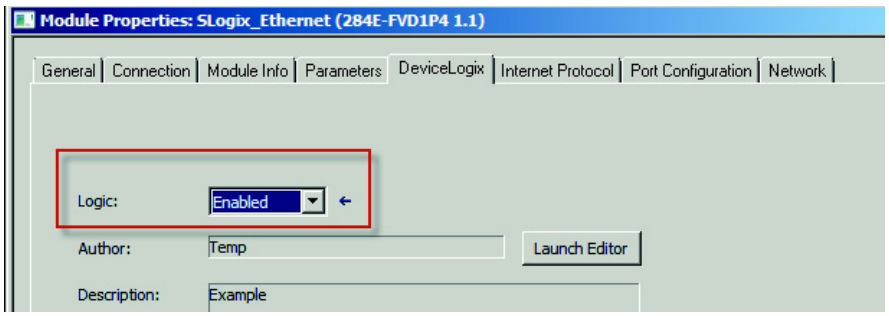

17. Click OK. To download the DeviceLogix program, you must go on-line with the PLC and allow the download. Ensure that the PLC is in the Program position. If in any other position, the download will not occur and an error will be generated.

18. The ArmorStart is now programmed and the logic is Active.

Import and Export

The ArmorStart EtherNet/IP AOP provides users an import or export function. The export function allows the DeviceLogix program to be saved to a file. This file can then be imported into a similar product of same function regardless of horsepower. Importing of DeviceLogix between unlike products is not allowed, for example Bulletin 284E and Bulletin 280E.

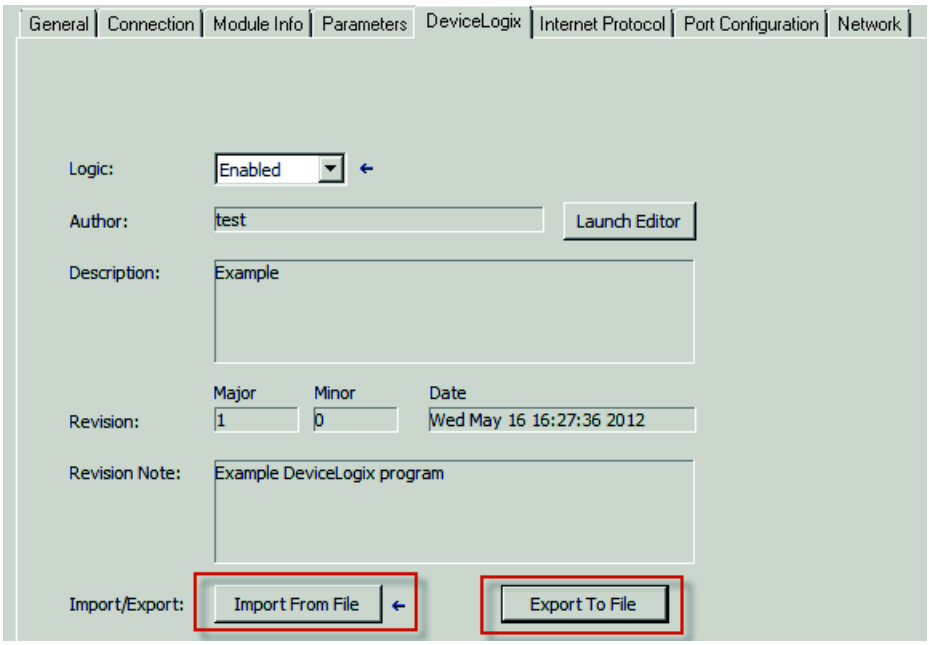

Notes:

Renewal Parts

Bulletin 280E, 281E

Control Module Renewal Part - Product Selection

Figure 111 - Bulletin 280E, 281E Control Module Renewal Part Catalog Structure

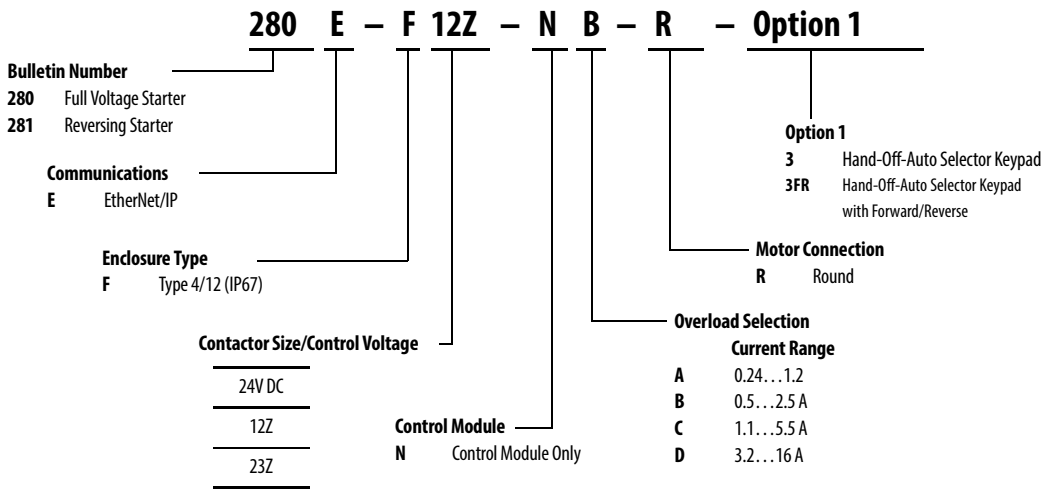

Table 55 - Full Voltage Starters – IP67/NEMA Type 4

Current Rating [A]	kW		Hp			Cat. No.
	230V AC 50 Hz	400V AC 50 Hz	200V AC 60 Hz	230V AC 60 Hz	460V AC 60 Hz	24V DC
0.24…1.2	0.18	0.37	—	—	0.5	280E-F12Z-NA-R
0.5…2.5	0.37	0.75	0.5	0.5	1	280E-F12Z-NB-R
1.1…5.5	1.1	2.2	1	1	3	280E-F12Z-NC-R
3.2…16	4	7.5	3	5	10	280E-F23Z-ND-R

Table 56 - Reversing Starters – IP67/NEMA Type 4

Current Rating [A]	kW		Hp			Cat. No.
	230V AC 50 Hz	400V AC 50 Hz	200V AC 60 Hz	230V AC 60 Hz	460V AC 60 Hz	24V DC
0.24…1.2	0.18	0.37	—	—	0.5	281E-F12Z-NA-R
0.5…2.5	0.37	0.75	0.5	0.5	1	281E-F12Z-NB-R
1.1…5.5	1.1	2.2	1	1	3	281E-F12Z-NC-R
3.2…16	4	7.5	3	5	10	281E-F23Z-ND-R

Base Module Renewal Part - Product Selection

Figure 112 - Bulletin 280E Base Module Renewal Part Catalog Structure

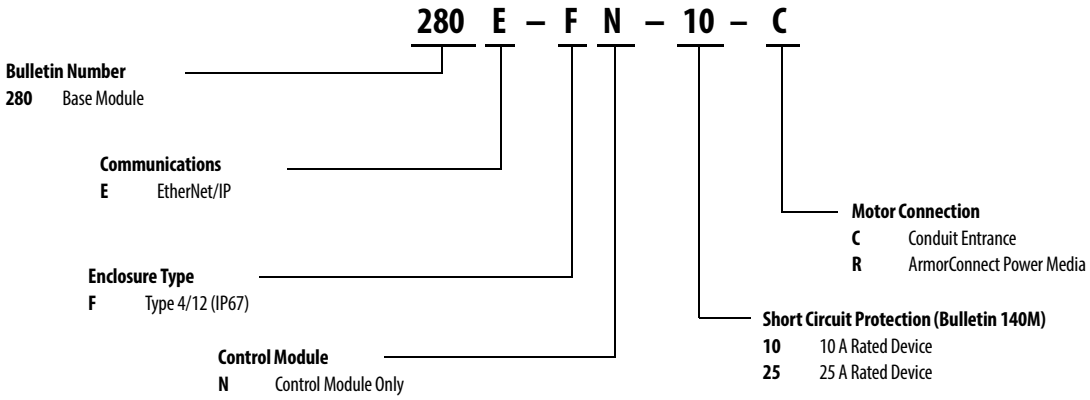

Table 57 - Bulletin 280E Full Voltage Starters and Bulletin 281E Reversing Starters – IP67/NEMA Type 4, with Conduit Entrance

Current Rating [A]	kW		Hp			Cat. No.
	230V AC 50 Hz	400V AC 50 Hz	200V AC 60 Hz	230V AC 60 Hz	460V AC 60 Hz	
0.24…1.2	0.18	0.37	—	—	0.5	280E-FN-10-C
0.5…2.5	0.37	0.75	0.5	0.5	1	280E-FN-10-C
1.1…5.5	1.1	2.2	1	1	3	280E-FN-10-C
3.2…16	4	7.5	3	5	10	280E-FN-25-C

Table 58 - Bulletin 280E Full Voltage Starters and Bulletin 281E Reversing Starters – IP67/NEMA Type 4, with ArmorConnect Connectivity

Current Rating [A]	kW		Hp			Cat. No.
	230V AC 50 Hz	400V AC 50 Hz	200V AC 60 Hz	230V AC 60 Hz	460V AC 60 Hz	
0.24…1.2	0.18	0.37	—	—	0.5	280E-FN-10-R
0.5…2.5	0.37	0.75	0.5	0.5	1	280E-FN-10-R
1.1…5.5	1.1	2.2	1	1	3	280E-FN-10-R
3.2…16	4	7.5	3	5	10	280E-FN-25-R

Table 59 - Motor and Brake Cables - See Motor and Brake Cables

Bulletin 284E

Control Module Renewal Part - Product Selection

Figure 113 - Bulletin 284E Control Module Renewal Part Catalog Structure

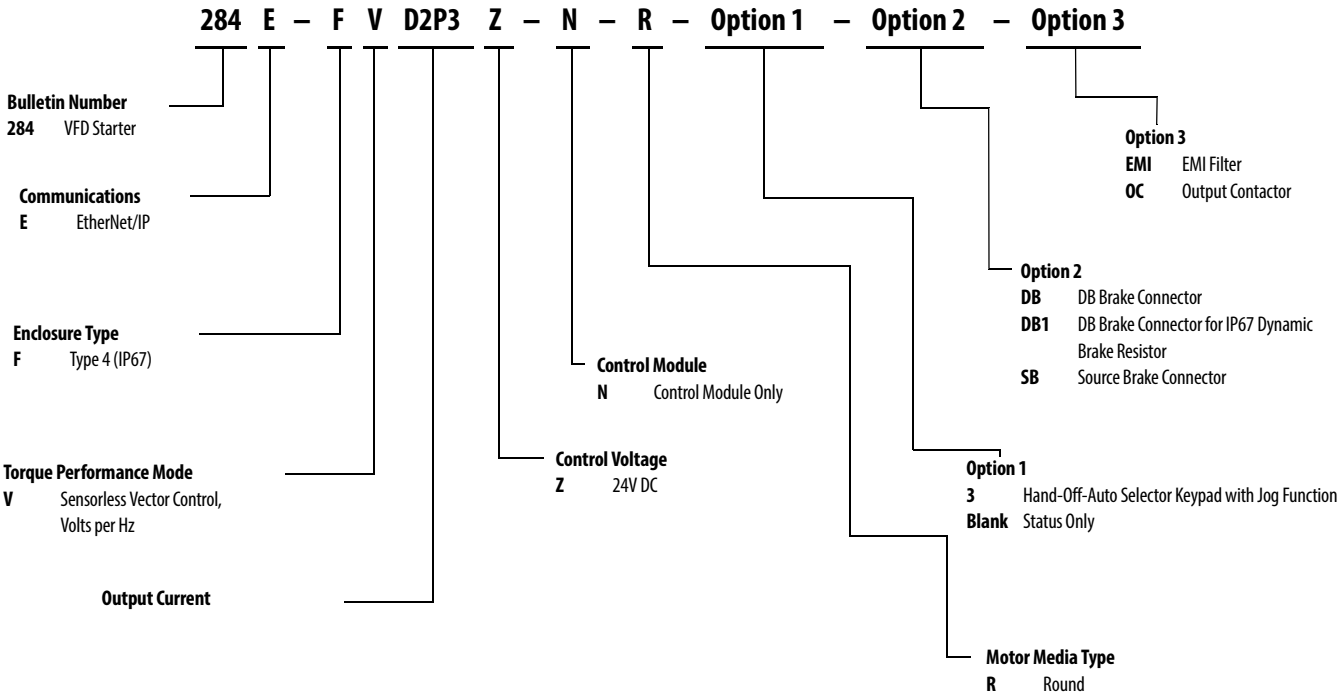

Table 60 - Bulletin 284E Control Module with Sensorless Vector Control, IP67/NEMA 4

Input Voltage	kW	Hp	24 V DC Control Voltage
380…480V 50/60 Hz 3-Phase	0.4	0.5	284E-FVD1P4Z-N-R
	0.75	1.0	284E-FVD2P3Z-N-R
	1.5	2.0	284E-FVD4P0Z-N -R
	2.2	3.0	284E-FVD6P0Z-N-R
	3.0	5.0	284E-FVD7P6Z-N-R

Base Module Renewal Part - Product Selection

Figure 114 - Bulletin 284E Base Module Renewal Part Catalog Structure

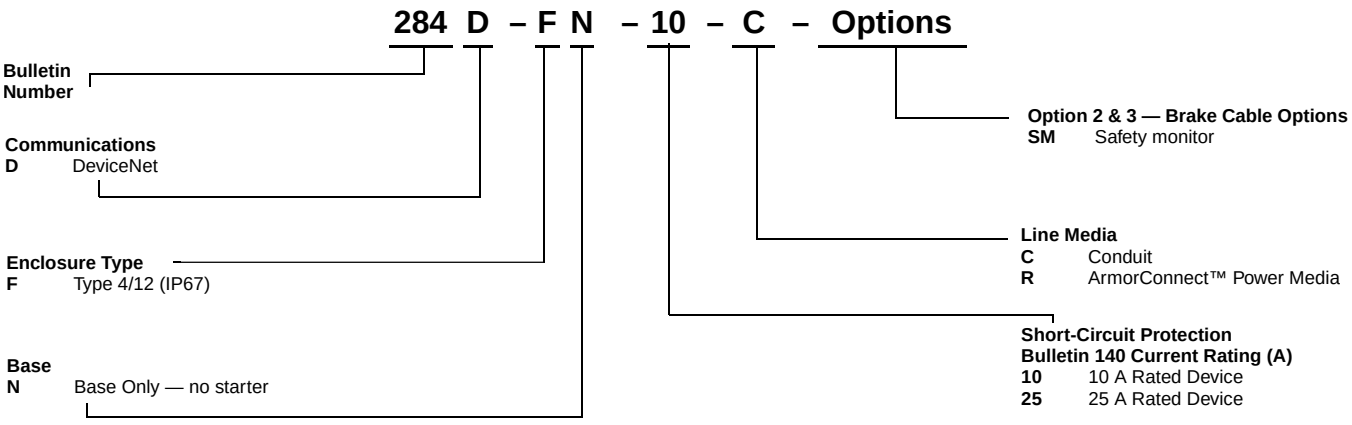

Table 61 - Bulletin 284E Base Module Renewal Part, IP67/Type 4/12, Up to 600V AC With Conduit Entrance

Input Voltage	kW	Hp	Output Current	Cat. No.
200..240V 50/60 Hz 3-Phase	0.4…0.75	0.5…1.0	2.3 A	280D-FN-10-C
	1.5	2.0	7.6 A	280D-FN-25-C
380…480V 50/60 Hz 3-Phase	0.4…2.2	0.5…3.0	1.4…4.0 A	280D-FN-10-C
	3.0	5.0	6.0…7.6 A	280D-FN-25-C
460…600V 50/60Hz 3-Phase	0.75…1.5	1.0…2.0	1.7....3.0 A	280D-FN-10-C
	2.2...4.0	3.0...5.0	4.2...6.6 A	280D-FN-25-C

Table 62 - Bulletin 284E Base Module Renewal Part, IP67/Type 4/12, Up to 600V AC with ArmorConnect Connectivity

Input Voltage	kW	Hp	Output Current	Cat. No.
200..240V 50/60 Hz 3-Phase	0.4…0.75	0.5…1.0	2.3 A	280D-FN-10-R
	1.5	2.0	7.6 A	280D-FN-25-R
380…480V 50/60 Hz 3-Phase	0.4…2.2	0.5…3.0	1.4…4.0 A	280D-FN-10-R
	3.0	5.0	6.0…7.6 A	280D-FN-25-R
460…600V 50/60Hz 3-Phase	0.75…1.5	1.0…2.0	1.7....3.0 A	280D-FN-10-R
	2.2...4.0	3.0...5.0	4.2...6.6 A	280D-FN-25-R

Table 63 - Motor Cables

Description	Cable Rating	Length [m (ft)]	Cat. No.
90° M22 Motor Cordset	IP67/Type 4/12	3 m (9.8)	280-MTR22-M3
		6 m (19.6)	280-MTR22-M6
		14 m (45.9)	280-MTR22-M14
90° M22 Motor Cordset (Shielded)	IP67/Type 4/12	3 m (9.8)	284-MTRS22-M3
		6 m (19.6)	284-MTRS22-M6
		14 m (45.9)	284-MTRS22-M14
90° Male/ Straight Female- M22 Pathcords	IP67/Type 4/12	1 m (3.3)	280-MTR22-M1D
		3.0 m (9.8)	280-MTR22-M3D

Table 64 - Dynamic Brake Cable

Description	Cable Rating	Length [m (ft)]	Cat. No.
90° M25 Source Brake Cable	IP67/Type 4/12	3m (9.8)	285-DBK22-M3

Table 65 - Source Brake Cable

Description	Cable Rating	Length [m (ft)]	Cat. No.
90° M25 Source Brake Cable	IP67/Type 4/12	3m (9.8)	285-BRC25-M3
		6 m (19.6)	285-BRC25-M6
		14 m (45.9)	285-BRC25-M14

Table 66 - Miscellaneous

Description	Notes	Qty	Cat. No.
Internal Replacement Fan	—	—	284-FAN
Alignment Pin	Replacement ONLY if base and control module have provision for it. Cannot retrofit without placement	2/each	284-PIN

Replacement Fuses

Description	
Output Fuse	
Fast acting, high-interupting capacity, tubular fuse Rating: 2.5 A, 250V Dimension [mm (in.)]: 20 (0.787) x 5 (0.197)	Littlefuse PN 021602.5
Control Fuse	
UL Listed Class CC, CSA HRC-1 Rating: 7 A, 600V Dimensions [in.]: 1.5 x 0.405	Cooper Bussman PN KTK-R-7 or Littlefuse PN KLKR007.T
Source Brake Fuse (For use with Bulletins 284 and 283 with Brake option CB/SB)	
UL Listed Class CC, CSA HRC-1 Rating: 3 A, 600V Dimensions [in.]: 1.5 x 0.405	Cooper Bussman PN KTK-R-3 or Littlefuse PN KLKR003.T

Replacement Parts

	Description	Cat. No.
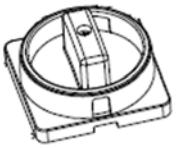	Replacement At-Motor Disconnect Handle Kit Includes (1) handle, (1) guard, and (3) screws	280-DISHDL
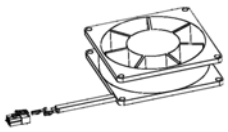	Replacement Fan for 284 Control Module	284-FAN
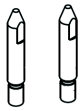	Replacement Guide Pins (2 pins per package) ❶	284-PIN

❶ These pins are replacement parts for factory-installed alignment pins. They cannot be retrofitted in the field. The base module and control module require mating features as indicated in the following diagrams.

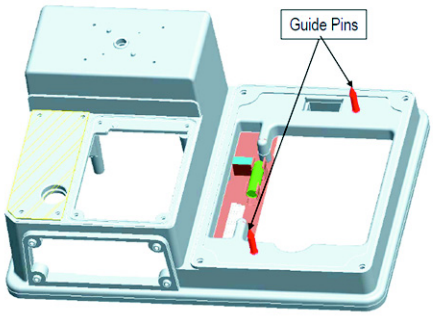

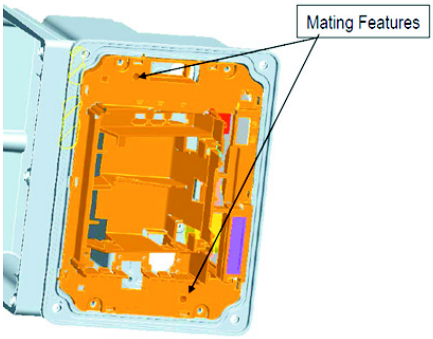

System Design Considerations When Using a Line Reactor

General Rule

Generally a line reactor for an ArmorStart controller is not required. Customers familiar with Rockwell Automation PowerFlex drives may ask this when installing an ArmorStart controller.

Reasons to Use

The most common reason's to use a line reactor are to:

- Extend the working life of the DC- bus capacitors by reducing the associated heating impact that is caused by ripple noise currents in these capacitors.
- Reduce the impact of line disturbances on other equipment that result VFD input switching.
- Reduce the RMS input current that is associated with peak changes in current that results from VFD input switching, allowing the use of smaller input conductors and transformers.
- Mitigate the impact of power system transients on the drive.

Repeated line disturbances in current and voltage can lead to premature input power structure failure for AC drives. One way to mitigate these types of issues is to add impedance to the incoming power line to the drive. Impedance comes in the form of transformers, line reactors, and conductors. When a large power distribution system (>100 kVA) is feeding many small VFDs, the associated input impedance can be lower than 1%. This low impedance can result in voltage and current disturbances that negatively impact performance and the overall life of an AC drive. A line reactor is one possible solution to absorb these power line disturbances. This does not mean that a reactor must be used in every situation. Conductors add impedance. On Machine solutions are generally further away from the power distribution panel therefore the length of cable adds impedance.

ArmorStart Design

The ArmorStart design incorporates features and additional components that allow for better heat transfer keeping the internal components cooler. This cooler design assures longer life of the DC bus capacitors that extend the life of the VFD. In addition, if line disturbance mitigation is necessary, the ArmorStart can be equipped with an EMI filter and shielded motor cable reducing the impact of the power switching components. However, if users specify input line reactors or transformers the recommendation is to group the ArmorStarts at the distribution panel under one line reactor (not individual reactors or transformers).

Lastly, when full voltage ArmorStarts controllers are included with VFD ArmorStart controllers, and line reactors are used, the starting currents of the full voltage ArmorStart controllers can be significant. The current must be accounted for in the selection of the line reactor or there is a risk of nuisance faults.

Application Examples

Manual Brake Control

If the user wants to activate the mechanical brake (source brake option) of the ArmorStart Bulletin 284E there are several parameters that need attention. The following configuration allows the brake to operate normally during running and when the Bulletin 284 is not running, allows the release of the brake for maintenance.

See the consume assembly (164 for DeviceNet or 166 for EtherNet/IP).

1. Select which Drive Input (1, 2, 3, 4) you will use to trigger the release of the brake. Configure the corresponding parameter that references the Drive Input P151, P152, P153, or P154.

Table 67 - Selecting Drive Input

Parameter Number	Parameter Name	Description	Factory Default	Group
151…154	Digital In 1 Sel Digital In 2 Sel Digital In 3 Sel Digital In 4 Sel	Selects the function for the digital inputs.	See Table 24 on page 179	Drive Advanced Setup

- Set the Drive In you select to "27", Em Brk Release - If EM Brake function enabled, this input releases the brake manually.

27 ❶	Em Brk Rls	If EM Brake function enabled, this input releases the brake. See parameter 155 and set to EM Brk Cntrol (22).

❶ Provides programmable control of Em Brk via digital input (1...4)

2. Set P137, Stop Mode to one of the following:
   - 8 = Ramp + EM B, CF Ramp to Stop with EM Brake Control. Stop command clears active fault.
   - 9 = Ramp + EM Brk Ramp to Stop with EM Brake Control.

3. Set P155, Relay Out Sel, to "22" EM Brk Cntrl EM Brake is energized.
   - Program Parameter 260 (EM Brk OFF Delay) for desired action.
   - Sets the time that the drive remains at minimum frequency (P134) before ramping to the commanded frequency.

EM Brk OFF Delay Sets the time that the drive remains at minimum frequency before ramping to the commanded frequency and energizing the brake coil relay when Parameter 137 (Stop Mode) is set to Option 8 or 9.	Parameter Number	260
	Related Parameters	134, 137
	Access Rule	GET/SET
	Data Type	UNIT
	Group	Drive Advanced Setup
	Units	0.01 sec
	Minimum Value	0.01 sec
	Maximum Value	10 sec
	Default Value	0.0 sec

   - Program Parameter 261 (EM Brk On Delay) for desired action.
   - (P137)

EM Brk On Delay Sets the time that the drive remains at minimum frequency before stopping and de-energizing the brake coil relay when Parameter 137 (Stop Mode) is set to Option 8 or 9.	Parameter Number	261
	Related Parameters	134, 137
	Access Rule	GET/SET
	Data Type	UNIT
	Group	Drive Advanced Setup
	Units	0.01 sec
	Minimum Value	0.01 sec
	Maximum Value	10.00 sec
	Default Value	0.0 sec

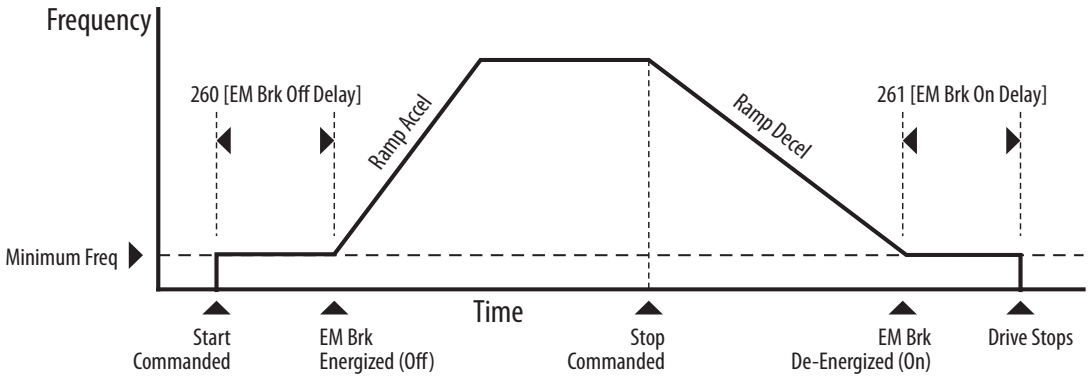

4. See the consume assembly below. The Drive Input that was configured in step #1, is used to control the mechanical brake.

Default Instance 166 Consumed Inverter Type Starter with Network Inputs	**ArmorStart EtherNet/IP**

Byte	**Bit 7**	**Bit 6**	**Bit 5**	**Bit 4**	**Bit 3**	**Bit 2**	**Bit 1**	**Bit 0**
0	Out B	Out A	—	JogReverse	JogForward	ResetFault	RunReverse	RunForward
1	**DriveInput4**	**DriveInput3**	**DriveInput2**	**DriveInput1**	DecelCtrl_1	DecelCtrl_0	AccelCtrl_1	AccelCtrl_0
2	FreqCommand (Low) (xxx.x Hz)							
3	FreqCommand (High) (xxx.x Hz)							
4	Pt07DeviceIn	Pt06DeviceIn	Pt05DeviceIn	Pt04DeviceIn	Pt03DeviceIn	Pt02DeviceIn	Pt01DeviceIn	Pt00DeviceIn
5	Pt15DeviceIn	Pt14DeviceIn	Pt13DeviceIn	Pt12DeviceIn	Pt11DeviceIn	Pt10DeviceIn	Pt9DeviceIn	Pt8DeviceIn

Bulletin 284 - VFD Preset Speed Example

DeviceLogix can be used to select one of multiple preset frequencies cooperatively with the PLC or independently based on user input. This can be done using the four digit inputs or the frequency control bits in DeviceLogix. The digital inputs provide the user the most flexibility, but can be more complex to configure. If a preset speed is needed, the simpler approach is to use frequency control that is found in the produced network bits of DeviceLogix. If you prefer not to apply DeviceLogix for preset speeds, then implement the digit inputs to select preset speed via Instance 166 found in Chapter 5. The following example demonstrates the use of frequency control bits in DeviceLogix

Frequency control (Freq Cntl) bits allow a maximum of 4 Preset Speeds, each preset has a predefined accel or decel reference. If more are required, then digital inputs must be configured and properly used. The example focuses on Frequency Control 2,1,0 in the Produced Network Bit Table 68. Note that there are other capabilities that are shown in the table that are not reviewed in this example.

Figure 115 below shows all available network outputs supported by Bulletin 284.Referring to Table 68 the preset frequencies are defined in parameter 170,171,172 and 173 of Bulletin 284. Also note the truth table that selects each of those frequencies. For example if Freq Cntl bit 2=1, 1=1, and 0=0 then the controller frequency is based on Parameter 172 (Preset Freq 2).

Figure 115 - Bulletin 284E Produced Network Bits in DeviceLogix Output

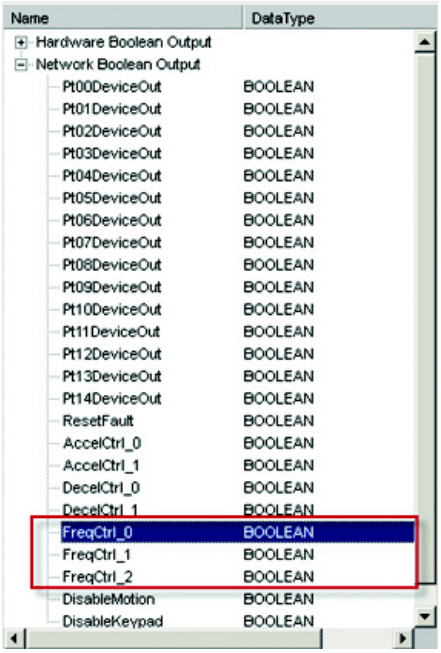

Table 68 -

See table 22 - Parameters 170…177 Preset Freq Options for predefined accel and decel

Accel2	Accel1	—	Description
0	0	—	No Command
0	1	—	Accel 1 Enable
1	0	—	Accel 2 Enable
1	1	—	Hold Accel Rate Selected
Decel 2	**Decel 1**	—	—
0	0	—	No Command
0	1	—	Decel 1 Enable
1	0	—	Decel 2 Enable
1	1	—	Hold Decel Rate Selected
Freq Ctrl 2	**Freq Ctrl 1**	**Freq Ctrl 0**	—
0	0	0	No Command
0	0	1	Freq Source = P136 (Start Source)
0	1	0	Freq Source = P169 (Internal Freq)
0	1	1	Freq Source = Comms
1	**0**	**0**	**P170 (Preset Freq 0) (Accel/Decel 1)**
1	**0**	**1**	**P171 (Preset Freq 1) (Accel/Decel 1)**
1	**1**	**0**	**P172 (Preset Freq 2) (Accel/Decel 2)**
1	**1**	**1**	**P173 (Preset Freq 3) (Accel/Decel 2)**

Using parameters 170-173, set them to 0,10,30, and 60 respectively. Figure 116 shows the preset frequencies 0-3.

Figure 116 - P170-173 Preset Frequency Settings

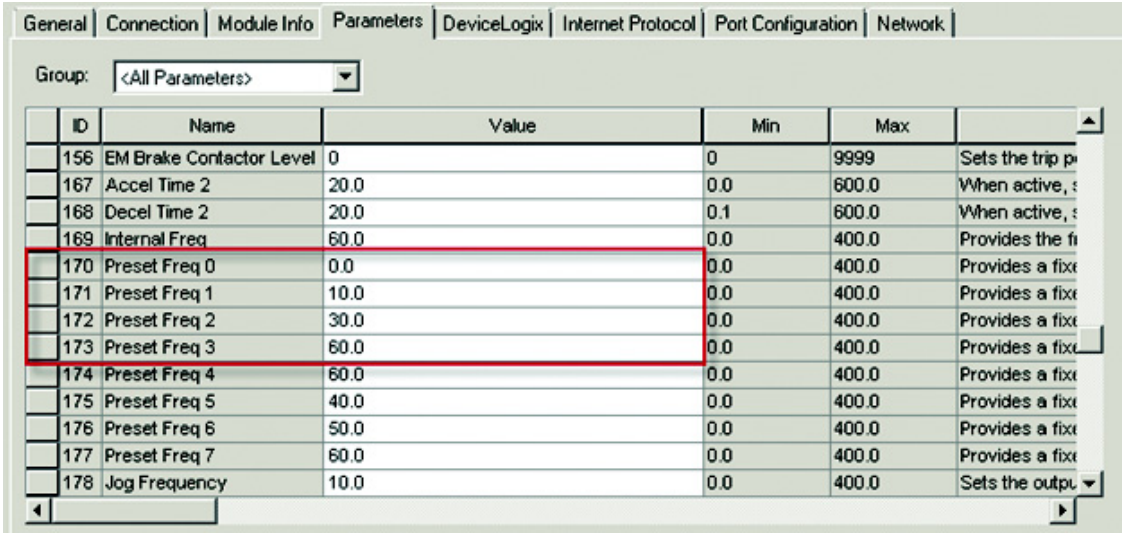

In this example, DeviceLogix receives data from the PLC program. The communication and network overrides are disabled as shown below.

	7	Starter Command	
	8	Network Override	Disabled
	9	Comm Override	Disabled

Figure 117 shows the DeviceLogix program. This allows the user to select one of three predefined frequencies that are based on two network bits.

Figure 117 - DeviceLogix Program

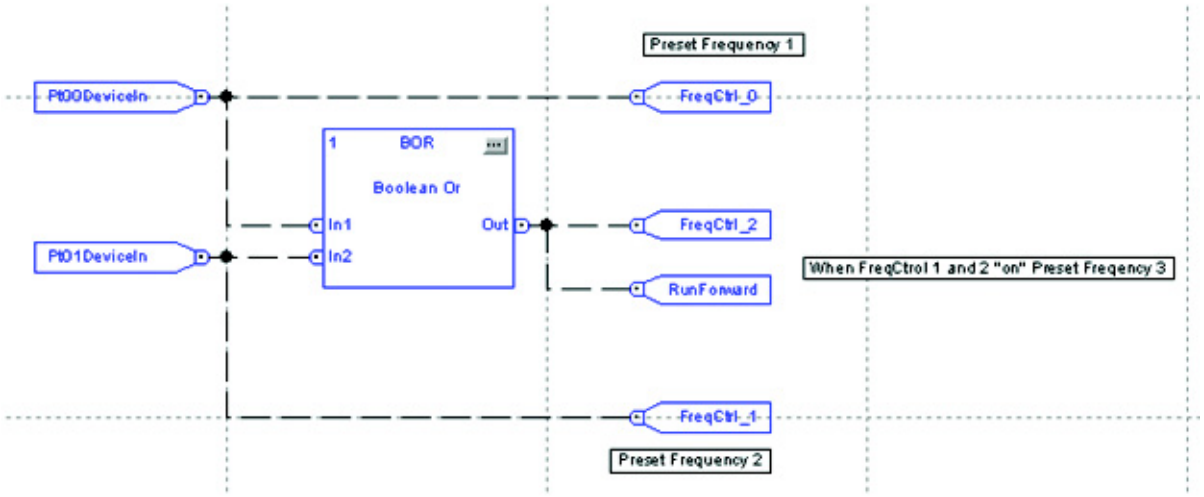

Once you exit the DeviceLogix editor, verify that the logic is “Enabled” otherwise the preset frequency control does not operate. See Figure 118.

Figure 118 -



This simple PLC program is used to select one of three preset speeds, speed 1, 2, or 3. For the purpose of this example speed 1, 2, & 3 are BOOL bits but they can be any valid input. Notice that there is an interlock for speed 1 and speed 2 to ensure that they do not trigger simultaneously. This would accidentally cause speed 3 to run.

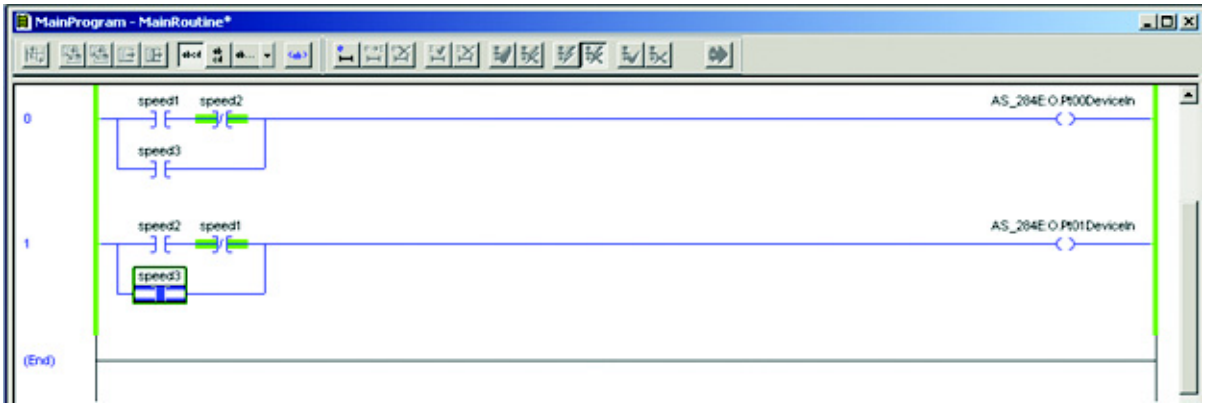

Download the finished program file to the PLC. In order for the parameters and DeviceLogix program to update in the device, verify the PLC is in program mode, and open the AOP for the Bulletin 284E.

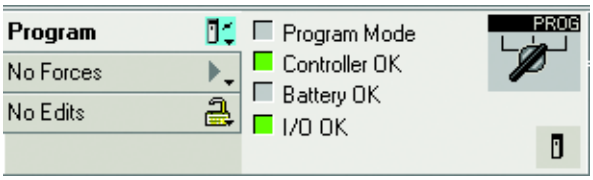

Select the Parameters and DeviceLogic tab. This forces a correlation between the program file and the device. If a difference exists either upload from the device or download from the project to the device. In this example, choose to download.

Figure 119 is an example of the parameter correlation when a difference occurs between the project and the device.

Figure 119 -

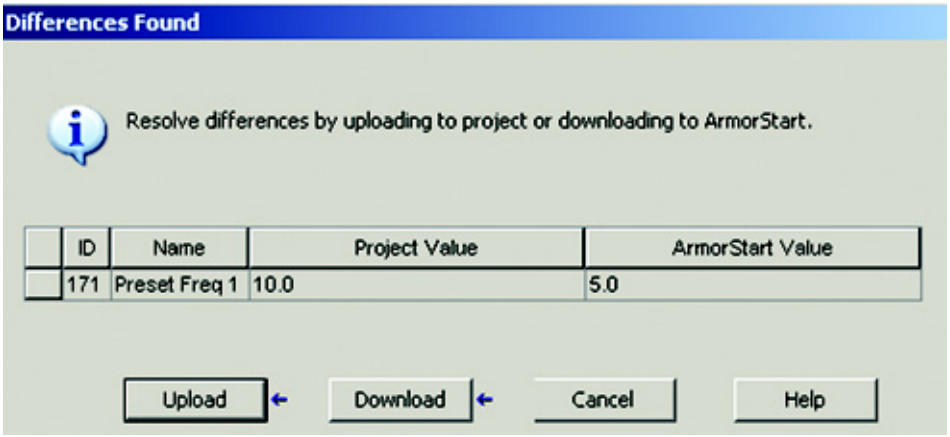

Figure 120 is an example of the DeviceLogix correlation when a difference occurs between the project and the device.

Figure 120 - DeviceLogix Correlation

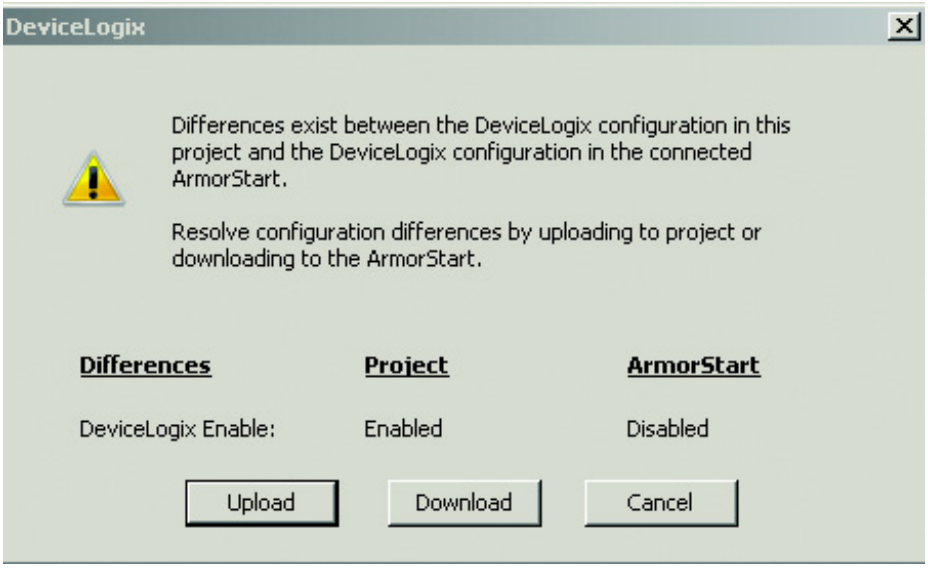

Note the caution statement before download.

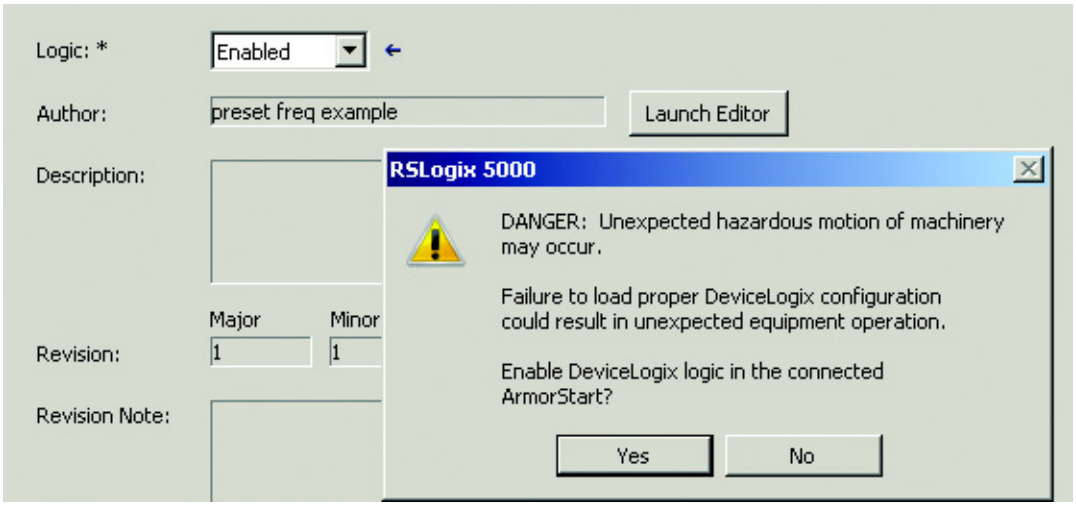

After the DeviceLogix correlation is successful, the following window is displayed.

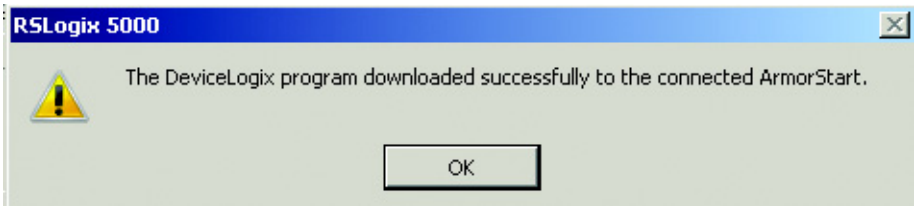

After both correlations are complete place the PLC in run mode and test the program by exercising speed 1, 2, and 3 bits.

IMPORTANT To download a new DeviceLogix program, connect to the PLC and stay in program mode. There can be no active I/O connections to the device or the download fails. Open the AOP and select the DeviceLogix tab to start the correlation process. If a difference exists, then an upload or download is necessary.

Operation

When bit Speed_1 is ON then the Bulletin 284E accelerates to 10 Hz or decelerate using accel/decel Time 2

When bit Speed_2 is ON then the Bulletin 284E accelerates to 30 Hz or decelerate using accel/decel Time 2

DeviceLogix Ladder Editor Example

ArmorStart EtherNet/IP supports DeviceLogix in a ladder programming environment. When using the ladder editor, additional explanation is needed with regard to naming conventions. Fault bits such as “Overload Trip” are tagged “FB0, FB1, FB2, etc. Status bits such as “Running Fwd” are tagged SB0, SB1, SB2, etc. Outputs such as “Run Reverse” are tagged DOP0, DOP1 etc. Produced Network Bits such as “Fault Reset” are tagged PNB0, PNB1, etc.

This document helps users interpret the naming conventions.

ArmorStart 280 and 281 Status Bits

The screen capture below shows how to choose status bits in the ladder editor.

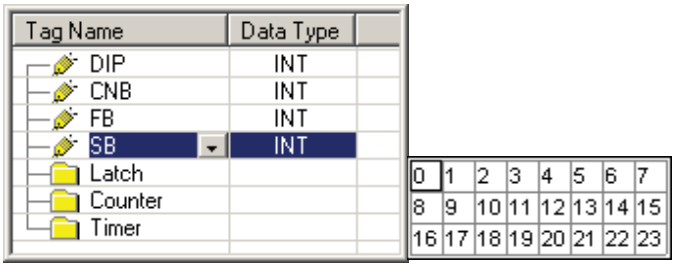

The following table contains the status bit definitions for ArmorStart 280D and 281D units:

Status Bit Declaration
0 = Tripped 1 = Running Fwd 2 = Running Rev 3 = Ready 4 = Net Ctl Status 5 = At Reference 6 = Keypad Hand 7 = HOA Status 8 = 140M On 9 = Explicit Msg Cnxn Exists 10 = IO Cnxn Exists 11 = Explicit Cnxn Fault 12 = IO Cnxn Fault 13 = IO Cnxn Idle 14 = Current Flowing 15 = Keypad Hand Direction

Bulletin 280 and 281 ArmorStart Fault Bits

The screen capture below shows how to choose fault bits in the ladder editor.

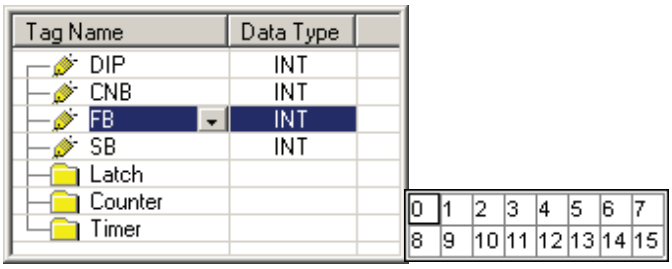

The following table contains the fault bit definitions for Bulletin 280D and 281D ArmorStart units:

Fault Bit Declaration
0 = Short Circuit
1 = Overload
2 = Phase Loss
3 = Control Power
4 = IO Fault
5 = Over Temp
6 = Phase Imbalance
7 = DNet Power Loss
8 = EEprom
9 = HW Flt
10 = PL Warning
11 = CP Warning
12 = IO Warning
13 = Phase Imbal Warn
14 = DN Warning
15 = HW Warning

Bulletin 280 and 281 ArmorStart Outputs

The screen capture below shows how to choose outputs in the ladder editor.

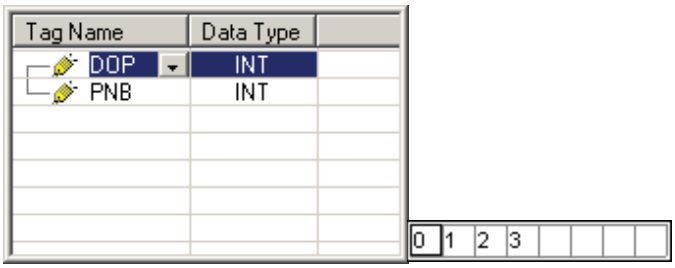

The Bulletin 280 and 281 have the following bit definitions:

0 = Run Forward
1 = Run Reverse
2 = User Output A
3 = User Output B

Bulletin 280 and 281 ArmorStart Produced Network Bits

The screen capture below shows how to choose Produced Network Bits in the ladder editor.

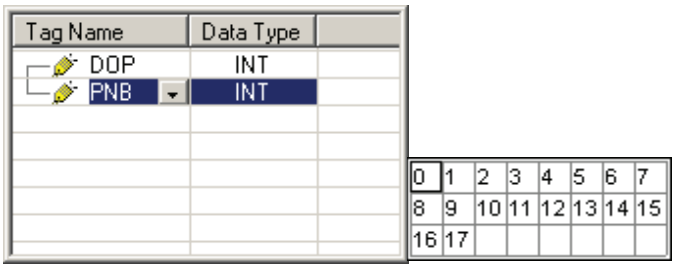

The following table contains the produced network bit definitions for Bulletin 280 and 281 ArmorStart units

Produce Network bit declaration
0 = Net Output 0 1 = Net Output 1 2 = Net Output 2 3 = Net Output 3 4 = Net Output 4 5 = Net Output 5 6 = Net Output 6 7 = Net Output 7 8 = Net Output 8 9 = Net Output 9 10 = Net Output 10 11 = Net Output 11 12 = Net Output 12 13 = Net Output 13 14 = Net Output 14 15 = Fault Reset 16 = Motion Disable 17 = Keypad Disable

Bulletin 284 ArmorStart Status Bits

The following table contains the status bit definitions for ArmorStart 284

Status bit declaration
0 = Tripped 1 = Warning 2 = Running Fwd 3 = Running Rev 4 = Ready 5 = Net Ctl Status 6 = Net Ref Status 7 = At Reference 8 = Drive Opto 1 9 = Drive Opto 2 10 = Keypad Jog 11= Keypad Hand 12 = HOA Status 13 = 140M On 14 = Contactor 1 15 = Contactor 2 16 = Explicit Msg Cnxn Exists 17 = IO Cnxn Exists 18 = Explicit Cnxn Fault 19 = IO Cnxn Fau 20 = IO Cnxn Idle 21 = Keypad Hand Direction

Bulletin 284 ArmorStart Fault Bits

The screen capture below shows how to choose Fault Bits in the ladder editor.

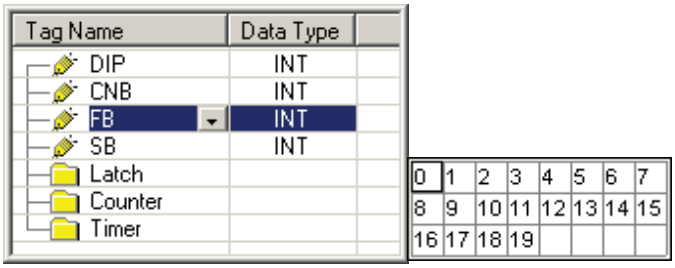

The following table contains the fault bit definitions for ArmorStart 284

Fault bit declaration
0 = Short Circuit 1 = Overload 2 = Phase Short 3 = Ground Fault 4 = Stall 5 = Control Power 6 = IO Fault 7 = Over Temp 8 = Phase Over Current 9 = DNet Power Loss 10 = Internal Comm 11 = DC Bus Fault 12 = EEprom 13 = HW Flt 14 = Reset Retries 15 = Misc. Fault 16 = CP Warning 17 = IO Warning 18 = DN Warning 19 = HW Warning

Bulletin 284 ArmorStart Outputs

The screen capture below shows how to choose outputs in the ladder editor.

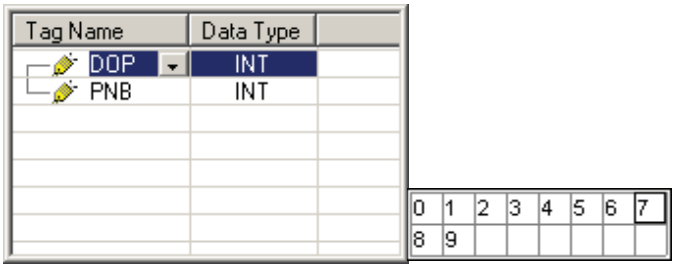

The Bulletin 284 bit definitions:

0 = Run Forward
1 = Run Reverse (Reserved)
2 = User Output A
3 = User Output B
4 = Drive Digital In 1
5 = Drive Digital In 2
6 = Drive Digital In 3
7 = Drive Digital In 4
8 = Jog Forward
9 = Jog Reverse

Bulletin 284 ArmorStart Produced Network Bits

The screen capture below shows how to choose Produced Network Bits in the ladder editor.

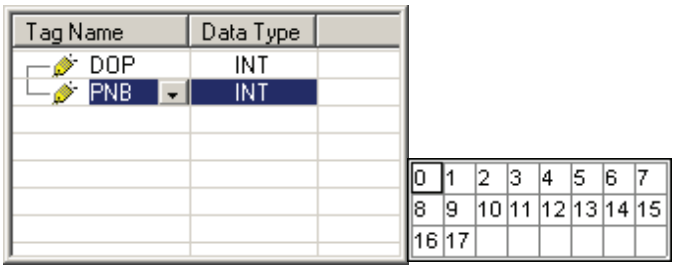

The following table contains the produced network bit definitions for Bulletin 284 ArmorStart units

Produce network bit declaration
0 = Net Output 0
1 = Net Output 1
2 = Net Output 2
3 = Net Output 3
4 = Net Output 4
5 = Net Output 5
6 = Net Output 6
7 = Net Output 7
8 = Net Output 8
9 = Net Output 9
10 = Net Output 10
11 = Net Output 11
12 = Net Output 12
13 = Net Output 13
14 = Net Output 14
15 = Fault Reset
16 = Accel 1
17 = Accel 2
18 = Decel 1
19 = Decel 2
20 = Freq Select 1
21 = Freq Select 2
22 = Freq Select 3
23 = Motion Disable
24 = Keypad Disable

Reporting Examples

How to Report the RPM of the 284 Internal Fan

To get the fan RPM of the fan, an explicit "get single" message instruction is needed using a service of 0x000E.

The fan RPM can be read using the following CIA Class 0x00B4, Instance 1, and Attribute 103. The nominal fan rpm value is 2800-3000 RPM. The ArmorStart trips once the fan speed falls below 62% (1736)

There is no FAN FAULT warning. The user needs to develop their own warning PLC code using the CIA message referred above for critical applications.

How to report the Heat Sink Temperature of the 284

To get the heat sink temperature of the 284, an explicit "get single" message instruction is needed.

The heat sink temperature can be read using the following CIA Class 0x000F, Instance 124, and Attribute 1.

Service: e (hex) Class: f (hex) Instance: 124 Attribute: 1 (hex)

How to Report the Last Four Faults

By default, the ArmorStart controller provides only the last fault as a parameter. To retrieve the last four faults, a PLC message instruction is required. Class 0x0097 DPI Fault Object is used to extract a structure of information that is related to the last four faults. The following example shows how to configure an explicit message to get all four fault logs. To retrieve information on all four faults, the instance value must be indexed from 1, 2, 3, and 4, where 1 is the most recent fault information. If more detailed information is needed, change the attribute to 0.

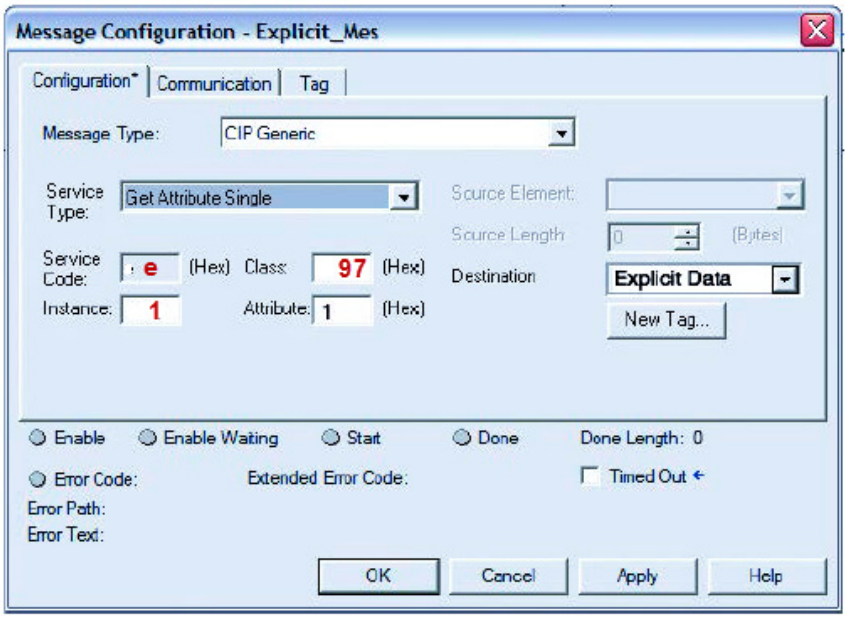

How to Report an IP Address Conflict Detection

Refer CIP Class 0x00F5 address conflict detection. This is stored in non-volatile memory and can be accessed through the TCP/IP Interface Object, instance 1, attribute 11 (“LastConflictDetected”) via Message instruction.

Demand Torque Off Considerations

ArmorStart EtherNet/IP does not support safety torque off internally, therefore this capability must be implemented external to the ArmorStart controller within the safety circuit. To achieve a required safety performance without damage to the ArmorStart 284 its required to have some coordination between the safety safety circuit and the VFD enable. When there is a demand of the safety system it is important that the ArmorStart VFD is disabled before any line side contactor opening. One way to accomplish this digitally is to configure one of digital inputs via parameter 151- 154 to option 9. Then using the consumed instance 166 and the previously defined digit input to disable the VFD before the safety contactors opening. This disables the ArmorStart allowing the contactors to open without damaging the VFD. Alternatively, if the safety circuit removes A1-A2 (switched control power) power before the safety contactors open this results in the same behavior and prevents damage to the VFD.

Keypad Disable with DeviceLogix

HOA operation can be prevented dynamically without parameter modification, as follows:

The DeviceLogix program that is shown below turns off the keypad if both inputs are true and the keypad is in either “OFF” or “AUTO” mode.

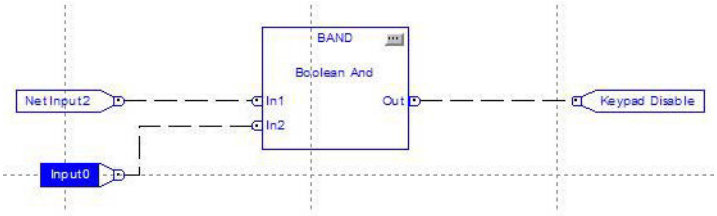

Note: If the user is already pressing the “HAND” button, the program does not disable the keypad; if the inputs are on after the “HAND” mode is actuated.

Motion Disable

The motion disable program disables motion regardless of the HOA status, PLC control, or DeviceLogix. Once motion disable is turned off, the ArmorStart or PLC resumes control of the motor again. The motion disable does not disable the HOA keypad. The keypad operation appears normal but it does not control the run command until the motion disable is off.

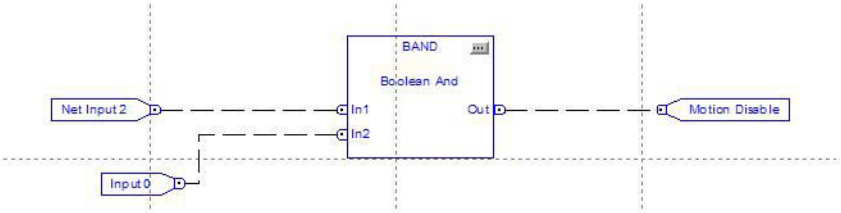

Rockwell Automation Support

Rockwell Automation provides technical information on the Web to assist you in using its products. At http://www.rockwellautomation.com/support you can find technical and application notes, sample code, and links to software service packs. You can also visit our Support Center at https://rockwellautomation.custhelp.com/ for software updates, support chats and forums, technical information, FAQs, and to sign up for product notification updates.

In addition, we offer multiple support programs for installation, configuration, and troubleshooting. For more information, contact your local distributor or Rockwell Automation representative, or visit http://www.rockwellautomation.com/services/online-phone.

Installation Assistance

If you experience a problem within the first 24 hours of installation, review the information that is contained in this manual. You can contact Customer Support for initial help in getting your product up and running.

United States or Canada	1.440.646.3434
Outside United States or Canada	Use the Worldwide Locator at http://www.rockwellautomation.com/rockwellautomation/support/overview.page, or contact your local Rockwell Automation representative.

New Product Satisfaction Return

Rockwell Automation tests all of its products to help ensure that they are fully operational when shipped from the manufacturing facility. However, if your product is not functioning and needs to be returned, follow these procedures.

United States	Contact your distributor. You must provide a Customer Support case number (call the phone number above to obtain one) to your distributor to complete the return process.
Outside United States	Please contact your local Rockwell Automation representative for the return procedure.

Documentation Feedback

Your comments will help us serve your documentation needs better. If you have any suggestions on how to improve this document, complete this form, publication RA-DU002, available at http://www.rockwellautomation.com/literature/.

Rockwell Automation maintains current product environmental information on its website at http://www.rockwellautomation.com/rockwellautomation/about-us/sustainability-ethics/product-environmental-compliance.page.

Rockwell Otomasyon Ticaret A.Ş., Kar Plaza İş Merkezi E Blok Kat:6 34752 İçerenköy, İstanbul, Tel: +90 (216) 5698400

www.rockwellautomation.com

Power, Control and Information Solutions Headquarters

Americas: Rockwell Automation, 1201 South Second Street, Milwaukee, WI 53204-2496 USA, Tel: (1) 414.382.2000, Fax: (1) 414.382.4444
Europe/Middle East/Africa: Rockwell Automation NV, Pegasus Park, De Kleetlaan 12a, 1831 Diegem, Belgium, Tel: (32) 2 663 0600, Fax: (32) 2 663 0640
Asia Pacific: Rockwell Automation, Level 14, Core F, Cyberport 3, 100 Cyberport Road, Hong Kong, Tel: (852) 2887 4788, Fax: (852) 2508 1846

Publication 280E-UM001C-EN-P - September 2015
Supersedes Publication 280E-UM001B-EN-P - July 2012

Copyright © 2015 Rockwell Automation, Inc. All rights reserved. Printed in the U.S.A.