Technical Data

Allen-Bradley

ArmorConnect® Power and Control Media Specifications

Bulletin Numbers 280, 888, 889, 898

Topic	Page
Product Overview	2
Three-Phase Power Media Diagram	4
Control Power Media Diagram	5
DeviceNet Media Diagram	6
Ethernet Media (ArmorStart® and ArmorStart® LT) Diagrams	7
280 Trunk Cable (Cordset and Patchcord) Specifications	8
280 Drop Cable (Cordset and Patchcord) Specifications	9
280 Tee and Reducer Specifications	10
280 Receptacle Specifications	12
280 Field-Installed Receptacle Specifications	13
889N Trunk and Drop Cable (Cordset and Patchcord) Specifications	14
898N T-Port Specifications	15
888N Receptacle Specifications	16
889A Shorting Plug Specifications	17
Accessory Specifications and Stop Circuit Examples	18

Additional Resources

These documents contain additional information concerning related products from Rockwell Automation.

Resource	Description
Industrial Automation Wiring and Grounding Guidelines, publication 1770-4.1	Provides general guidelines for installing a Rockwell Automation industrial system.
Product Certifications website, http://www.ab.com	Provides declarations of conformity, certificates, and other certification details.

You can view or download publications at http://www.rockwellautomation.com/literature/. To order paper copies of technical documentation, contact your local Allen-Bradley distributor or Rockwell Automation sales representative.

LISTEN. THINK. SOLVE.®

Allen Bradley 280-MTR22-M20 | gesrepair.com

Three-Phase Power Media

	 **Three-Phase Power Trunk Cable**	 **Three-Phase Power Drop Cable**	 **Three-Phase Power Tees and Reducers**	 **Three-Phase Power Receptacles**	 **Accessories**
Description	• Cordset - Cable with integral female or male connector on one end • PatchCord - Cable with integral female or male connector on each end	• Cordset - Cable with integral female or male connector on one end • PatchCord - Cable with integral female or male connector on each end	• Tee - Connects to a single drop line to trunk with M35 connectors • Reducing Tee - Connects to a single M22 drop line to trunk M35 connector • Reducer - Connects from M35 male connector to M22 female connector	• Female receptacles are a panel mount connector with flying leads • Male receptacles are a motor juction box mounted connector with flying leads • Field-installable receptacle for custom length cable	• Sealing Caps offered in versions to interface with female or male connectors • Locking Clips clamshell design clips over three power phase connector to limit customer access
Features	• Rated for Motor Branch Circuits - Meets UL 2237 for Industrial Machinery - 65 kA High fault rating (SCCR) - Rated for wash down environments • Straight or right angle connectors • 4-pin connector type • Cable rating: TC-ER/STOOW • Multiple standard lengths	• Rated for Motor Branch Circuits - Meets UL 2237 for Industrial Machinery - 65 kA High fault rating (SCCR) - Rated for wash down environments • Straight or right angle connectors • 4-pin connector type • Cable rating: TC-ER/STOOW • Multiple standard lengths	• Rated for Motor Branch Circuits - Meets UL 2237 for Industrial Machinery - 65 kA High fault rating (SCCR) - Rated for wash down environments • Trunk Tee, Reducing Tee and Reducer • 4-pin connector type	• Rated for Motor Branch Circuits - Meets UL 2237 for Industrial Machinery - 65 kA High fault rating (SCCR) - Rated for wash down environments • Male and female configurations • 4-pin connector type • 1/2 in. NPT • Available in 1 meter length	• Sealing Caps - Available in M35 and M22 styles • Locking Clips - Designed for M35 and M22 connectors
Rated Voltage	600V	600V	600V	600V	—
Connector Body Dimensions	• Straight: 88.9 mm x 38.6 mm • Right Angle: 75.5 mm x 74 mm	• Straight: 56. mm x 25.4 mm • Right Angle: 44.9 mm x 40.4 mm	• Trunk Tee: 108 mm x 73.6 mm • Reducing Tee: 108 mm x 65.5 mm • Reducer: 112.5 mm x 38.1 mm	• M22 Female: 33.45 mm x 25.45 mm • M22 Male: 28.04 mm x 25.45 mm • M35 Female: 71.12 mm x 38.10 mm • M35 Male: 63.50 mm x 38.10 mm	—
	Page 8	**Page 9**	**Page 10**	**Page 12**	**Page 18**

Control Power Media

	 **Control Power Cordsets & Patchcords**	 **Control Power T-ports**	 **Control Power Receptacles**	 **Control Power Shorting Plugs**
Description	• Cable with integral connector on either one or both ends	• Cable with single male connector attached to two female connectors	• Panel mount connector with flying leads	• Integral connector with leads shorted for specific application requirements
Features	• 6-pin/5-used configuration • Male and female • Straight or right angle versions • 16 AWG conductors, cable dual rated UL TC/Open Wiring and STOOW • Multiple standard lengths	• 6-pin/5-used configuration • Compact design • Color-coded E-stop in and E-stop out configurations	• 6-pin/5-used configuration • Male and female • 16 AWG conductors • 1/2 NPT mounting threads • Multiple standard lengths	• 6-pin/5-used configuration • Male • Multiple versions color coded for simple identification
Rated Voltage	600V	600V	600V	600V
Connector Body Dimensions	• Straight: 56 x 25 mm (2.2 x 1 in.) • Right Angle: 40 x 45 mm (1.6 x 1.8 in.)	72 x 64 mm (2.8 x 2.5 in.)	30 x 25 mm (1.2 x 1 in.)	56 x 25 mm (2.2 x 1 in.)
	Page 14	**Page 15**	**Page 16**	**Page 17**

Description

The power media offers both three-phase and control power cable systems of cordsets, patchcords, receptacles, tees, reducers and accessories, to be used with the ArmorStart Distributed Motor Controller. These cable system components allow quick connection of ArmorStart Distributed Motor Controllers, thereby reducing installation time. They provide for repeatable, reliable connection of the three-phase and control power to the ArmorStart Distributed Motor Controller and motor, by providing a plug and play environment that also avoids system mis-wiring.

Compared to the traditional conduit installations, with power media you profit and benefit from:

- Reduce commissioning time
- Plug and play design eliminates wiring errors
- Increased system design flexibility
- No special tools required
- Reduced labor costs

Three-Phase Power Media

The three-phase power media offers quick disconnect cables that provide a secure connection to the ArmorStart Distributed Motor Controller. The connectors can be straight or right angled and are physically keyed to prevent wiring mishaps. The cabling options include:

- **Cordsets:** Cable with integral male or female connector at one end and flying leads at the other
- **Patchcords:** Cable with integral connector at each end (one male, one female)

The three-phase power tee, reducing tee, and reducer offers flexibility in system design.

The receptacles provide a termination point at the panel and motor junction box. The female receptacles can be used for a panel mount connection. The male receptacles can be used for a quick disconnect at the motor junction box.

Field-installable receptacles allow for custom power cable lengths. This reduces the amount of excess cable and provides a neater appearance to machines. Selecting just a few cordsets provides the sufficient cable lengths needed to meet the required applications. This minimizes project costs and complexity by reducing the number of different part numbers that are necessary.

Three-phase power media components are rated for motor branch circuits per UL 2237.

Control Power Media

The control power media offers a mini disconnect cable that provides a secure connection to the ArmorStart Distributed Motor Controller. The control power media components are a 6-pin/5-used configuration to prevent mis-wiring with network connectors. The connectors can be straight or right angled and are physically keyed to prevent wiring mishaps. The cabling options include:

- **Cordsets:** Cable with integral male or female connector at one end and flying leads at the other
- **Patchcords:** Cable with integral connector at each end (one male, one female)

The control power tees offers flexibility in system design. The T-port connects a single drop line to the trunk. Three types of tees are offered. The E-stop In tee is used to connect to the Bulletin 800F On-Machine E-Stop station using a control power media patchcord. The E-stop Out tee is used with cordset or patchcord to connect to the ArmorStart Distributed Motor Controller. And the ArmorStart Auxiliary tees allow users to apply standard 4 wire auxiliary power down the trunk to other tees and devices.

The receptacles provide a termination point at the panel and ArmorStart Distributed Motor Controller. The female receptacles can be used for a panel mount connection. The male receptacles can be used for a quick disconnect at the ArmorStart Distributed Motor Controller with gland plate design.

Note: Refer to your local electrical code for proper application and protection of long length power cable to minimize physical damage and appropriate short-circuit or ground-fault protection for the assembly. See application note 290-AP001 for additional information.

Three-Phase Power Media System Overview

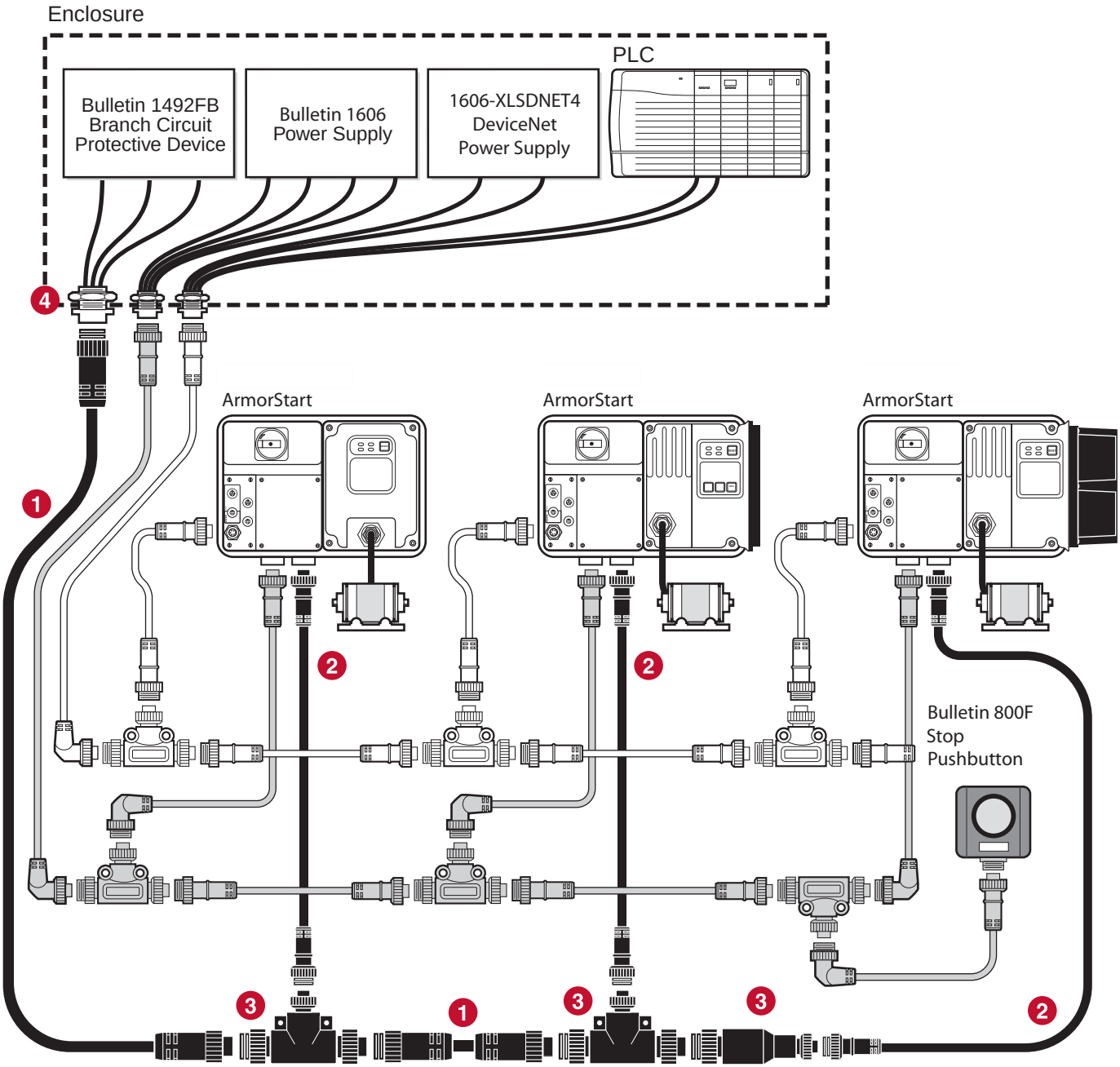

1. Three-Phase Power Trunk - Patchcord cable with integral female or male connector on each end (Example Cat. No.: 280-PWRM35A-M*)
2. Three-Phase Drop Cable - PatchCord cable with integral female or male connector on each end (Example Cat. No.: 280-PWRM22A-M*)
3. Three-Phase Power Tees and Reducer - Tee connects to a single drop line to trunk with quick change connectors (Cat. No.: 280-T35)
   Reducing Tee connects to a single drop line (Mini) to trunk (Quick change) connector (Cat. No.: 280-RT35)
   Reducer connects from quick change male connector to mini female connector(Cat. No.: 280-RA35)
4. Three-Phase Power Receptacles - Female receptacles are a panel mount connector with flying leads (Cat. No.: 280-M35F-M1)

Control Power Media System Overview

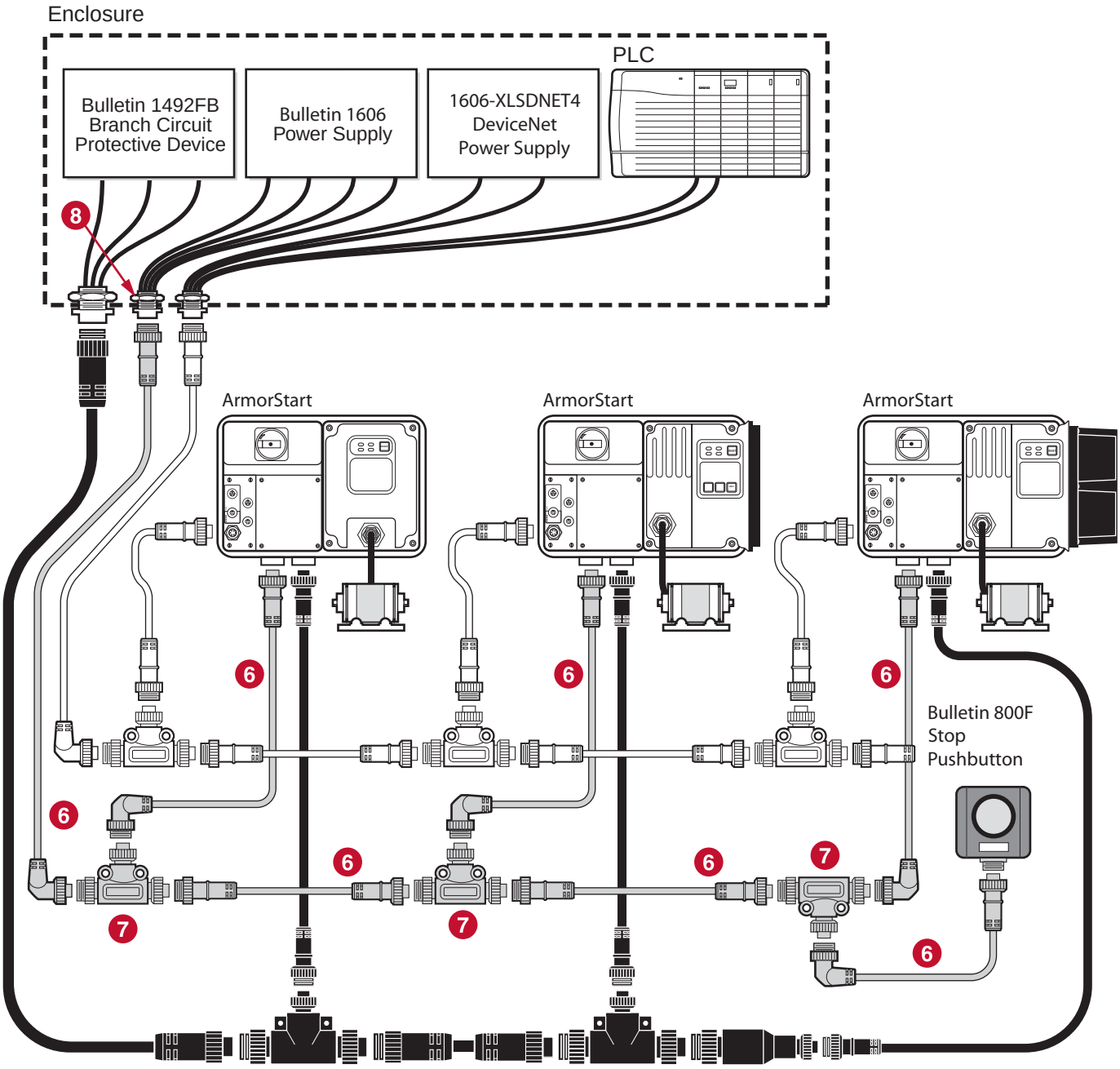

6. Control Power Media Patchcords - PatchCord cable with integral female or male connector on each end (Example Cat. No.: 889N-F65GFNM-*)
7. Control Power Tees - The E-stop In Tee (Cat. No.: 898N-653ST-NKF) is used to connect to the Bulletin 800F On-Machine E-Stop station using a control power media patchcord. The E-stop Out tee (Cat. No.: 898N-653ES-NKF) is used with cordset or patchcord to connect to the ArmorStart Distributed Motor Controller.
8. Control Power Receptacles - Female receptacles are a panel mount connector with flying leads (Cat. No.: 888N-D65AF1-*)

DeviceNet Media System Overview

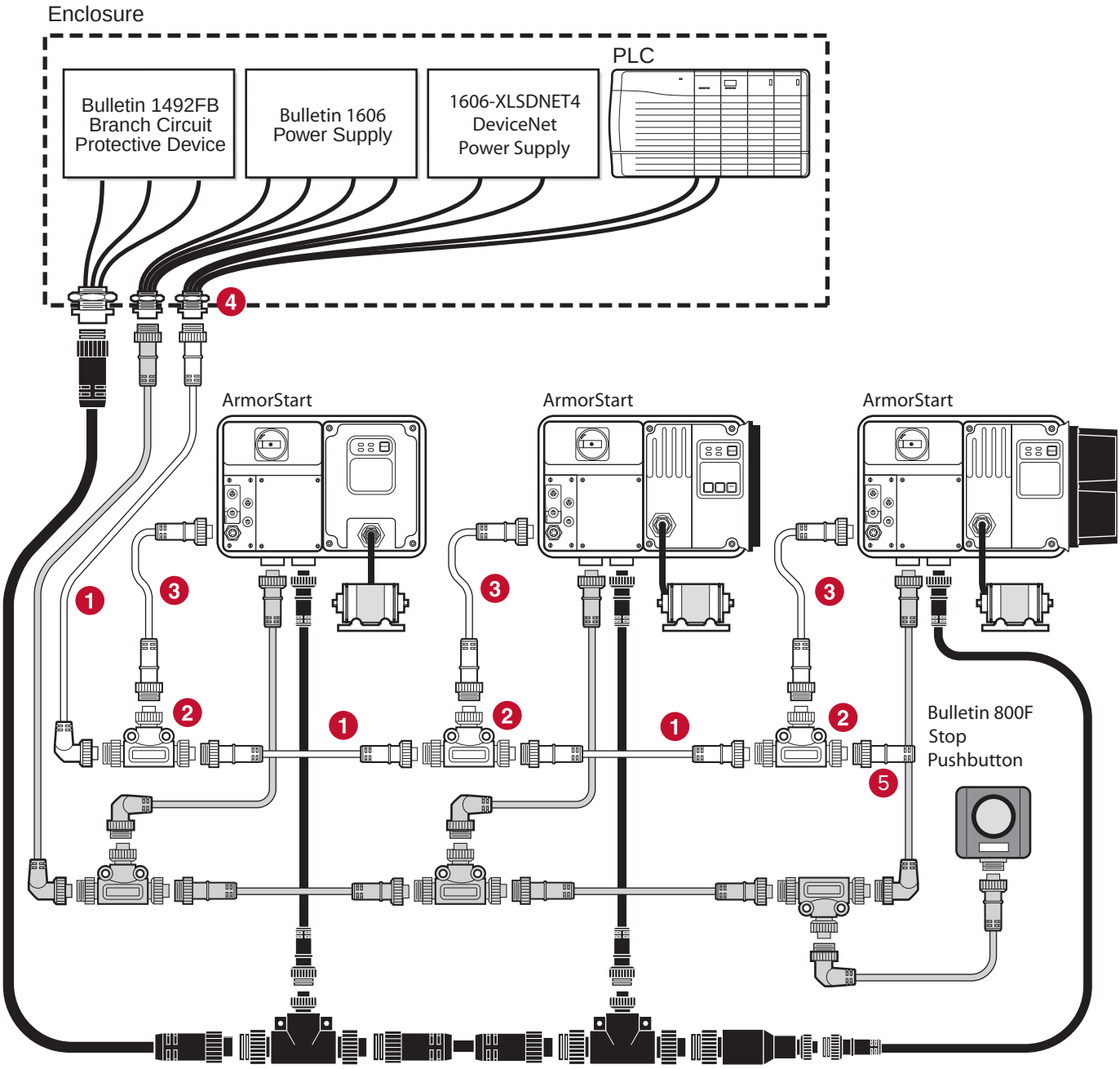

1. DeviceNet Trunk Cable - Patchcord trunk cable with integral female or male connector on each end (example 1485C-P*N5-M5)
2. DeviceNet Mini- T-Port Tap - T-ports are used for connecting drops to the trunk line (example 1485P-P1N5-MN5KM)
3. DeviceNet Drop Cable - Drop cables and patch cords are used to connect devices to the network (example 1485G-P*M5-Z5)
4. DeviceNet Receptacle - Recepatcles are used when connections present but required (example 1485A–CXN5–M5)
5. DeviceNet Terminator - Properly designed DeviceNet networks require terminating resistors (example 1485A–T1N5)

Note: See the On-Machine Connectivity catalog for specific DeviceNet media components.

Ethernet Power Media System Overview

ArmorStart

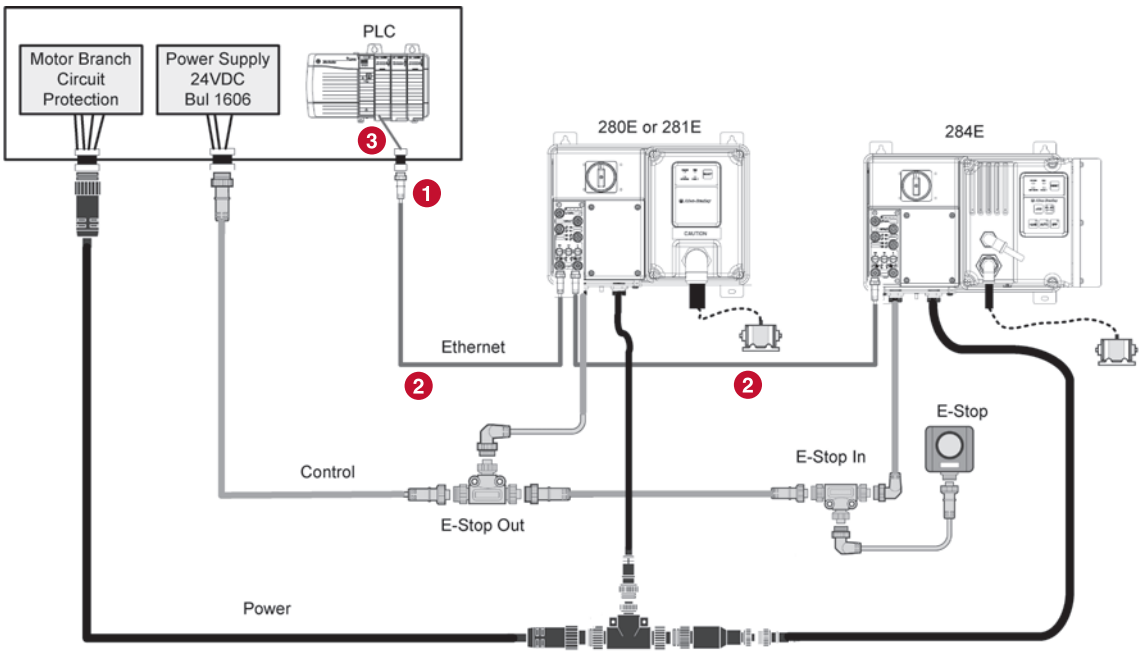

ArmorStart LT

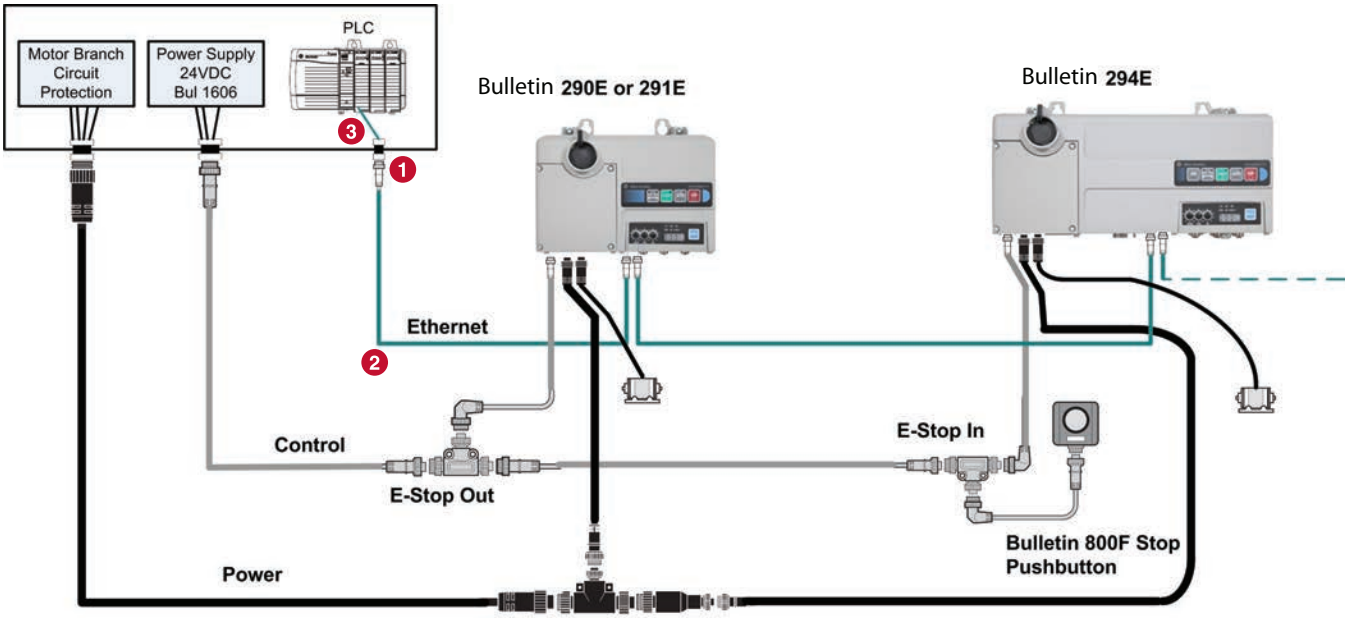

Ethernet Cat5e Connections:

1. CAT5e Bulkhead Connector and Receptacle (Example Cat. No.:1585A-DD4JD)
2. CAT5e Patch Cord, IP67, M12 D-Code, Male Straight, Male Right Angle (Example Cat. No.: 1585D-M4TBDE-*)
3. CAT5e, Patch Cable, IP20, RJ45 Male to RJ45 Male (Example Cat. No. 1585J-M4TB-*)

Note: See the On-Machine Connectivity catalog for specific Ethernet media components.

Pinout and Color Code

	Face View Pinout	
	4-Pin	
	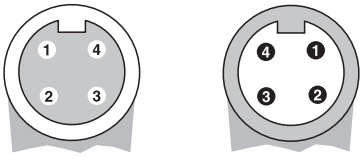	
	Female	Male
Color Code	1 Black 2 Green/Yellow Extended PIN	3 Red 4 White

Specifications

Mechanical	
Coupling Nut	Black anodized aluminum
Housing	Black PVC
Insert	Black PVC
Cable Diameter	0.775 in. +/- 0.12 in. (19.68 mm +/- 0.5 mm) with four 10 AWG conductors
Bend Radius	Not to exceed 10x the cable diameter
Electrical	
Contacts	Copper alloy with gold over nickel plating
Cable	Black PVC, dual rated UL TC/Open Wiring and STOOW
Cable Rating	600V AC/DC
Assembly Rating	4-pin — 10 AWG, 600V @ 32 A
Short Circuit Current Rating (SCCR)	**Circuit Breaker:** Suitable for use on a circuit capable of delivering not more than 65 000 RMS symmetrical amperes at 480V AC maximum when protected by Bul. 140U-H frame circuit breaker, not rated more than 480V, 100 A and a maximum interrupting of 65 000 RMS symmetrical amperes. **Fusing:** Suitable for use on a circuit capable of delivering not more than 65 000 RMS symmetrical amperes at 600V AC maximum when protected by CC, J, and T class fuses.
Environmental	
Enclosure Rating	IP67, UL Type 4/12 & NEMA 6P; 1200 psi washdown
Operating Temperature	UL Type TC 600V 90 °C Dry 75 °C Wet, Exposed Run (ER) or MTW 600V 90 °C or STOOW 105 °C 600V - CSA STOOW 600V FT2

Approximate Dimensions

Dimensions in millimeters (inches). Dimensions are not intended to be used for manufacturing purposes and are subject to change.

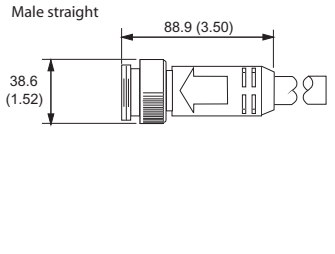

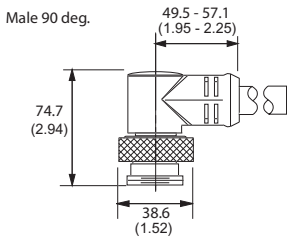

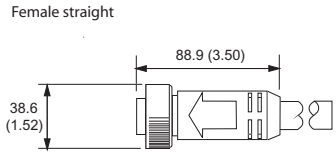

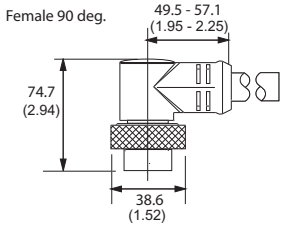

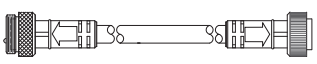

Example of Patchcord



Example of Cordset

Pinout and Color Code

	Face View Pinout	
	4-Pin	
		
	Female	Male
Color Code	1 Black 2 White	3 Red 4 Green/Yellow Extended PIN

Specifications

Mechanical	
Coupling Nut	Black anodized aluminum
Housing	Black PVC
Insert	Black PVC
Cable Diameter	0.43 in. +/- 0.12 in. (10.9 mm +/- 0.5 mm) with four 16 AWG conductors 0.58 in. +/- 0.12 in. (14.7 mm +/- 0.5 mm) with four 14 AWG conductors
Bend Radius	Not to exceed 10x the cable diameter
Electrical	
Contacts	Brass with gold over nickel plating
Cable	Black PVC, dual rated UL TC/Open Wiring and STOOW
Cable Rating	600V AC/DC
Assembly Rating	4-pin — 16 AWG, 600V @ 10 A 4-pin — 14 AWG, 600V @ 15 A
Short Circuit Current Rating (SCCR)	**Fusing:** Suitable for use on a circuit capable of delivering not more than 65 000 RMS symmetrical amperes at 600V AC maximum when protected by CC, J, and T class fuses, rated 40 A non-time delay or 20 A time delay. **Circuit Breaker**: Suitable for use on a circuit capable of delivering not more than 45 000 RMS symmetrical amperes at 480Y/277V AC maximum when protected by Cat. No. 140U-D6D3-C30 circuit breaker, not rated more than 480Y/277V, 30 A, having an interrupting rating not less than 45 000 RMS symmetrical amperes, 480Y/277V maximum.
Environmental	
Enclosure Rating	IP67, UL Type 4/12 & NEMA 6P; 1200 psi washdown
Operating Temperature	UL Type TC 600V 90 °C Dry 75 °C Wet, Exposed Run (ER) or MTW 600V 90 °C or STOOW 105 °C 600V - CSA STOOW 600V FT2

Approximate Dimensions

Dimensions in millimeters (inches). Dimensions are not intended to be used for manufacturing purposes and are subject to change.

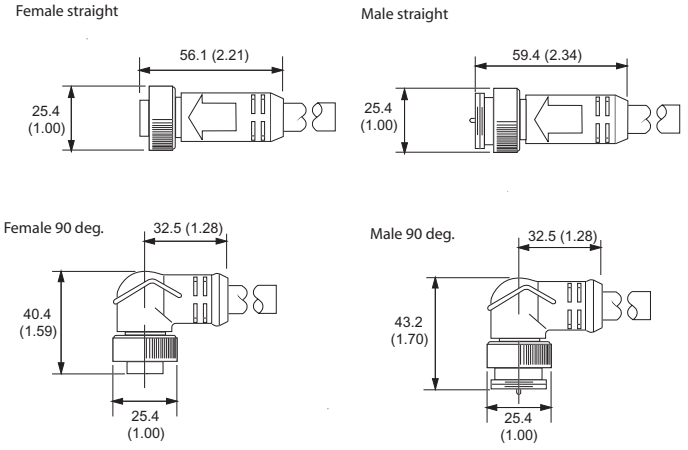

Specifications

Mechanical	
Coupling Nut	Black anodized aluminum (Trunk), black zinc diecast (Drop)
Housing	Black PVC
Insert	Black PVC
Electrical	
Contacts	Copper alloy with gold over nickel plating
Voltage	600V AC/DC
Assembly Rating	Trunk Tee: 32 A Reducing Tee: Trunk 32 A/Drop 13 A Reducer: 15 A
Short Circuit Current Rating (SCCR)	*Trunk Tee: 32 A* **Fusing**: Suitable for use on a circuit capable of delivering not more than 65 000 RMS symmetrical amperes at 600V AC maximum when protected by CC, J, and T class fuses. **Circuit Breaker**: Suitable for use on a circuit capable of delivering not more than 65 000 RMS symmetrical amperes at 480V AC maximum when protected by Bulletin 140U-H frame circuit breaker, not rated more than 480V, 100 A and a maximum interrupting of 65 000 RMS symmetrical amperes. *Reducing Tee 32 A/Drop 13 A and Reducer* **Fusing:** Suitable for use on a circuit capable of delivering not more than 65 000 RMS symmetrical amperes at 600V AC maximum when protected by CC, J, and T class fuses, rated 40 A non-time delay or 20 A time delay. **Circuit Breaker**: Suitable for use on a circuit capable of delivering not more than 45 000 RMS symmetrical amperes at 480Y/277V AC maximum when protected by Cat. No. 140U-D6D3-C30 circuit breaker, not rated more than 480Y/277V, 30 A, having an interrupting rating not less than 45 000 RMS symmetrical amperes, 480Y/277V maximum.
Environmental	
Enclosure Rating	IP67, UL Type 4/12 & NEMA 6P; 1200 psi washdown

Pinout and Color Code

Assembly Rating	Color Code	Face View Pinout 4-Pin M35 Connector	Face View Pinout 4-Pin M22 Connector
Trunk Tee: 32 A	A	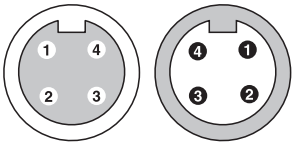 Female Male 1 Black 2 Green/Yellow Extended PIN 3 Red 4 White	—
Reducing Tee: Trunk 32 A/ Drop 15 A	B	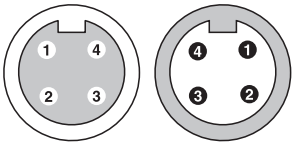 Female Male 1 Black 2 Green/Yellow Extended PIN 3 Red 4 White	 Female 1 Black 2 White 3 Red 4 Green/Yellow Extended PIN
Reducer: Trunk 32 A/ Drop 15 A	C	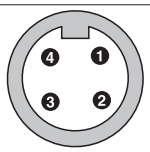 Male 1 Black 2 Green/Yellow Extended PIN 3 Red 4 White	 Female 1 Black 2 White 3 Red 4 Green/Yellow Extended PIN

Approximate Dimensions

Dimensions in millimeters (inches). Dimensions are not intended to be used for manufacturing purposes and are subject to change.

Reducer

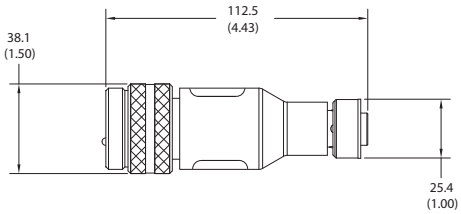

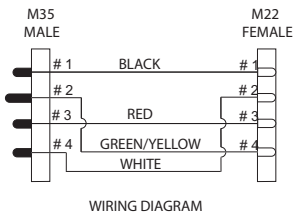

WIRING DIAGRAM

Approximate Dimensions

Dimensions in millimeters (inches). Dimensions are not intended to be used for manufacturing purposes and are subject to change.

PoweTee

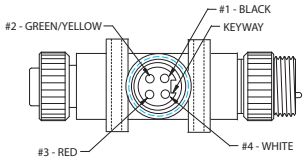

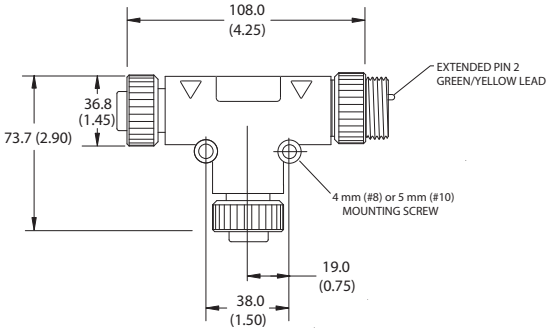

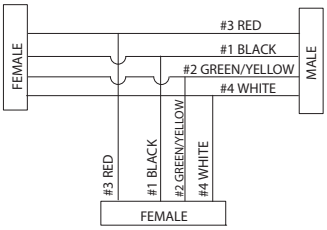

WIRING DIAGRAM

Power Tee - reducing drop

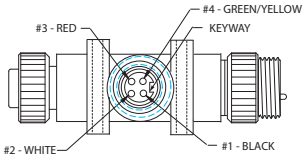

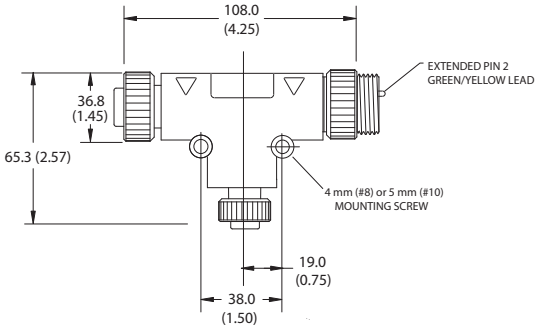

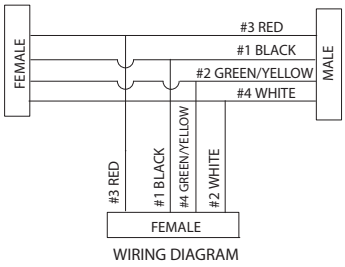

WIRING DIAGRAM

Specifications

Mechanical	
Insert	Black PVC
Receptacle Shell Material	Black anodized aluminum (female) and zinc diecast, black E-coat (male)
Electrical	
Contacts	Copper alloy with gold over nickel plating (Trunk), brass with gold over nickel plating (Drop)
Cable Rating	600V AC/DC
Assembly Rating	4-pin — 16 AWG, 600V @ 10 A 4-pin — 14 AWG, 600V @ 15 A 4-pin — 10 AWG, 600V @ 32 A
Short Circuit Current Rating (SCCR)	*4-pin — 10 AWG* **Fusing:** Suitable for use on a circuit capable of delivering not more than 65 000 RMS symmetrical amperes at 600V AC maximum when protected by CC, J, and T class fuses **Circuit Breaker:** Suitable for use on a circuit capable of delivering not more than 65 000 RMS symmetrical amperes at 480V AC maximum when protected by Bul. 140U-H frame circuit breaker, not rated more than 480V, 100 A and a maximum interrupting of 65 000 RMS symmetrical amperes. *4-pin — 16 or 14 AWG* **Fusing:** Suitable for use on a circuit capable of delivering not more than 65 000 RMS symmetrical amperes at 600V AC maximum when protected by CC, J, and T class fuses, rated 40 A non-time delay or 20 A time delay. **Circuit Breaker**: Suitable for use on a circuit capable of delivering not more than 45 000 RMS symmetrical amperes at 480Y/277V AC maximum when protected by Cat. No. 140U-D6D3-C30 circuit breaker, not rated more than 480Y/277V, 30 A, having an interrupting rating not less than 45 000 RMS symmetrical amperes, 480Y/277V maximum.
Environmental	
Enclosure Rating	IP67, UL Type 4/12 & NEMA 6P; 1200 psi washdown

Pinout and Color Code

		Face View Pinout			
		4-Pin			
		M35 Connector		M22 Connector	
		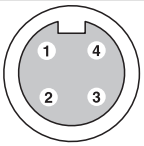	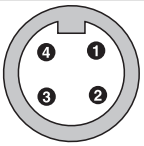		
Assembly Rating	Color Code	Female	Male	Female	Male
16 AWG, 600V, 10 A	A	—		1 Black 2 White	3 Red 4 Green/Yellow Extended PIN
10 AWG, 600V, 25 A	B	1 Black 2 Green/Yellow Extended PIN	3 Red 4 White	—	

Approximate Dimensions

Dimensions in millimeters (inches). Dimensions are not intended to be used for manufacturing purposes and are subject to change.

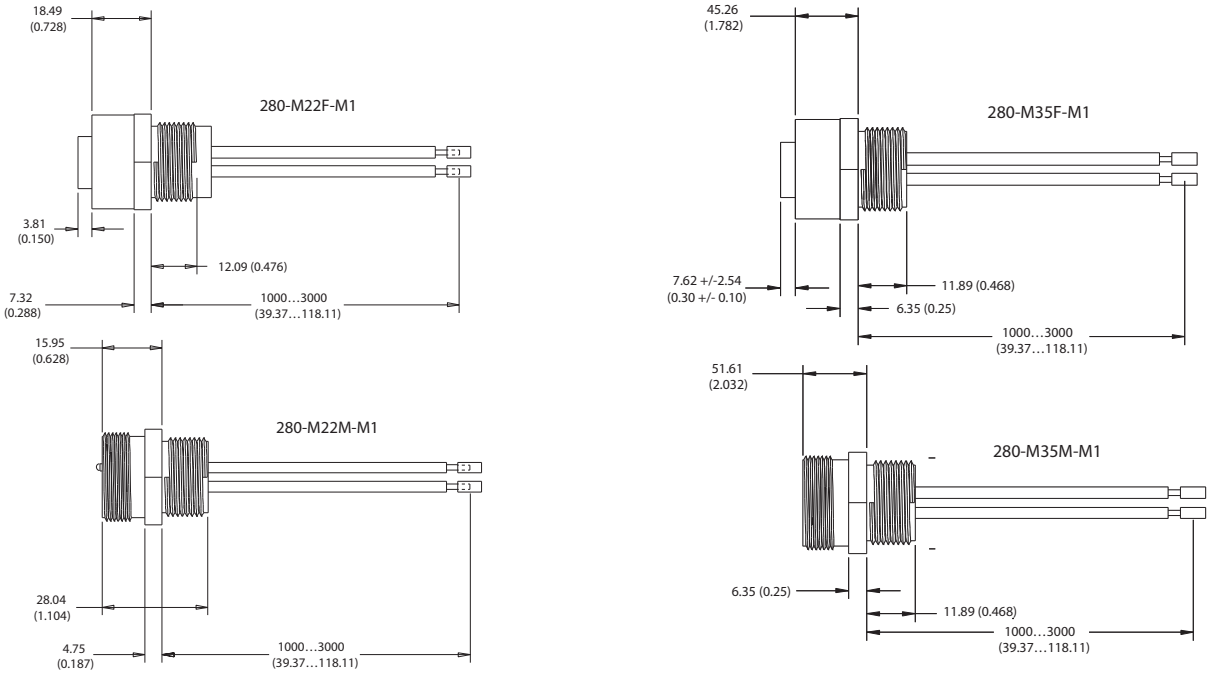

Specifications

Mechanical		
Insert	Black PVC	
Receptacle Shell Material	Black anodized aluminum (female) and zinc diecast, black E-coat (male)	
Electrical		
Contacts	Copper alloy with gold over nickel plating (Trunk), brass with gold over nickel plating (Drop)	
Cable Rating	600V AC/DC: 14 AWG Listed TC, 16 AWG Listed TC-ER/STOOW, 10 AWG Listed TC-ER/STOOW	
Assembly Rating	**Note:** When applied with 14 AWG or larger wire, this is suitable for use on Motor Branch Circuits, per NFPA 79.	4-pin — 16 AWG, 600V @ 10 A (0.28…0.47 in. cable dia.) 4-pin — 14 AWG, 600V @ 15 A (0.28…0.47 in. cable dia.) 4-pin — 10 AWG, 600V @ 25 A (0.48…0.81 in. cable dia.)
Short Circuit Current Rating (SCCR)	*4-pin — 10 AWG* **Fusing:** Suitable for use on a circuit capable of delivering not more than 65 000 RMS symmetrical amperes at 600V AC maximum when protected by CC, J, and T class fuses **Circuit Breaker:** Suitable for use on a circuit capable of delivering not more than 65 000 RMS symmetrical amperes at 480V AC maximum when protected by Bul. 140U-H frame circuit breaker, not rated more than 480V, 100 A and a maximum interrupting of 65 000 RMS symmetrical amperes. *4-pin — 16 and 14 AWG* **Fusing:** Suitable for use on a circuit capable of delivering not more than 65 000 RMS symmetrical amperes at 600V AC maximum when protected by CC, J, and T class fuses, rated 40 A non-time delay or 20 A time delay. **Circuit Breaker**: Suitable for use on a circuit capable of delivering not more than 45 000 RMS symmetrical amperes at 480V AC maximum when protected by Cat. No. 140U-D6D3-C30 circuit breaker, not rated more than 480Y/277V, 30 A, having an interrupting rating not less than 45 000 RMS symmetrical amperes, 480Y/277V maximum.	
Environmental		
Enclosure Rating	IP67, UL Type 4/12 & NEMA 6P; 1200 psi washdown	

Pinout and Color Code

	Face View Pinout			
	4-Pin			
	M35 Connector		M22 Connector	
	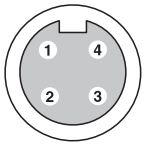	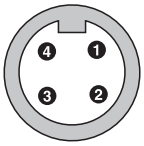		
Assembly Rating	Female	Male	Female	Male
16 AWG, 600V, 10 A 14 AWG, 600V, 15 A	—		1 Black 2 White	3 Red 4 Green/Yellow Extended PIN
10 AWG, 600V, 25 A	1 Black 2 Green/Yellow Extended PIN	3 Red 4 White	—	

Approximate Dimensions

Dimensions in millimeters (inches). Dimensions are not intended to be used for manufacturing purposes and are subject to change.

M22, 16 AWG, Female

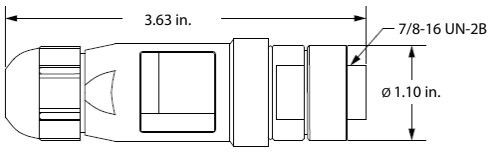

M22, 16 AWG, Male

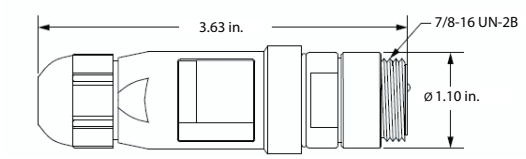

M35, 10 AWG, Female

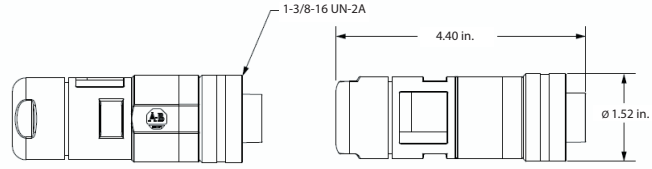

M35, 10 AWG, Male

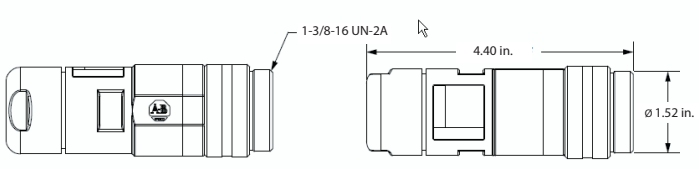

Specifications

Mechanical	
Coupling Nut	Black epoxy coated zinc
Overmold	Black Riteflex TPE
Insert	Yellow Riteflex TPE
Contacts	Brass/gold over palladium nickel
Cable	Grey PVC, 16 AWG, dual rated UL TC/Open Wiring and STOOW
Cable Diameter	0.44 in. +/- 0.12 in. (11.18 mm +/- 0.5 mm)
Electrical	
Cable Rating	UL Type TC 600V 90 °C Dry 75 °C Wet, Open Wiring or MTW 600V 90 °C or STOOW 105 °C 600V - CSA STOOW 600V FT2
Assembly Rating	16 AWG, 600V, 10 A
Environmental	
Enclosure Type Rating	IP67, NEMA 6P, 1200 psi washdown
Operating Temperature	-20…+90 °C (-4…+194 °F)

Pinout and Color Code

	Face View Pinout	
	6-pin/5-used	
		
	Female	Male
Color Code	1 Red (+) 2 Black (-) 3 Green (GND)	4 Blank/Not Used 5 Blue (S1) 6 White (S2)

Approximate Dimensions

Dimensions in millimeters (inches). Dimensions are not intended to be used for manufacturing purposes and are subject to change.

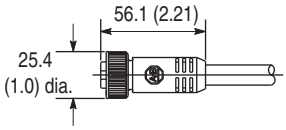

Female Straight

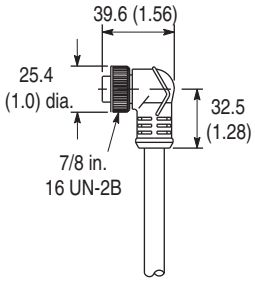

Female 90 Deg.

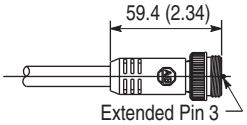

Male Straight

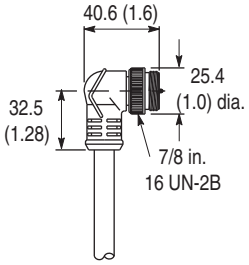

Male 90 Deg.

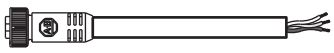

Example of Cordset

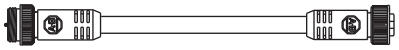

Example of Patchcord

Specifications

Mechanical	
Coupling Nut	Black epoxy coated zinc
Housing	Riteflex TPE
Insert	Yellow Riteflex TPE
Contacts	Brass/gold over palladium nickel
Electrical	
Assembly Rating	600V, 10 or 8 A
Environmental	
Enclosure Type Rating	IP67, NEMA 6P, 1200 psi washdown
Operating Temperature	-20…+90 °C (-4…+194 °F)

Pinout and Color Code

	Face View Pinout	
	6-pin/5-used	4-pin/4-used
	Cat. No. 898N-653ES-NKF or 898N-653ST-NKF	Cat. No. 898N-543ES-NKF
	 Female	 Female
Color Code	1 Red 2 Black 3 Green 4 Blank/Not Used 5 Blue 6 White	1 White 2 Black 3 Blue 4 Red

Wiring Diagrams

E-stop out

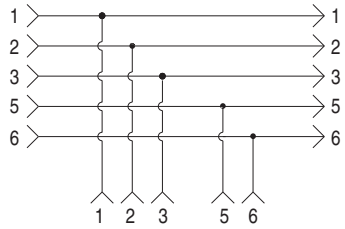

E-stop in

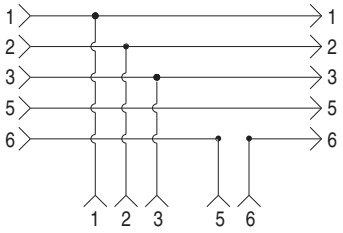

ArmorStart auxilliary

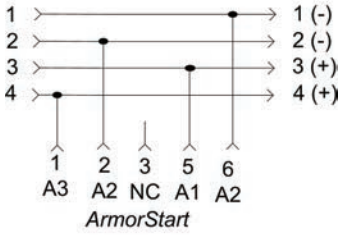

Approximate Dimensions

Dimensions in millimeters (inches). Dimensions are not intended to be used for manufacturing purposes and are subject to change.

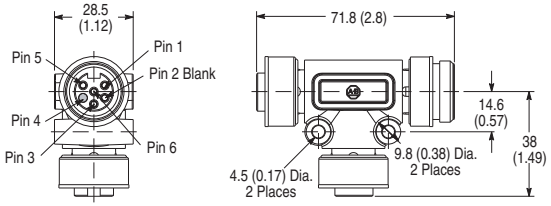

E-stop out or E-stop in

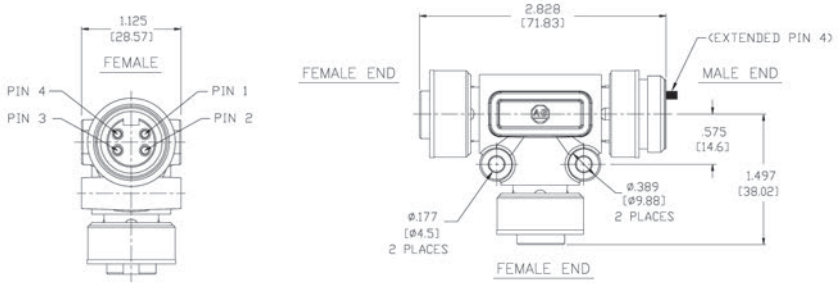

ArmorStart auxilliary

Specifications

Mechanical	
Receptacle Shell	Male: Black epoxy coated zinc diecast Female: Black anodized aluminum
Insert	Yellow PVC
Contacts	Brass/gold over palladium nickel
Electrical	
Assembly Rating	16 AWG, 600V, 10 A
Environmental	
Enclosure Type Rating	IP67, NEMA 6P, 1200 psi washdown
Operating Temperature	-20…+90 °C (-4…+194 °F)

Pinout and Color Code

	Face View Pinout	
	6-pin/5-used	
	 Female	 Male
Color Code	1 Red (+) 2 Black (-) 3 Green (GND)	4 Blank/Not Used 5 Blue (S1) 6 White (S2)

Approximate Dimensions

Dimensions in millimeters (inches). Dimensions are not intended to be used for manufacturing purposes and are subject to change.

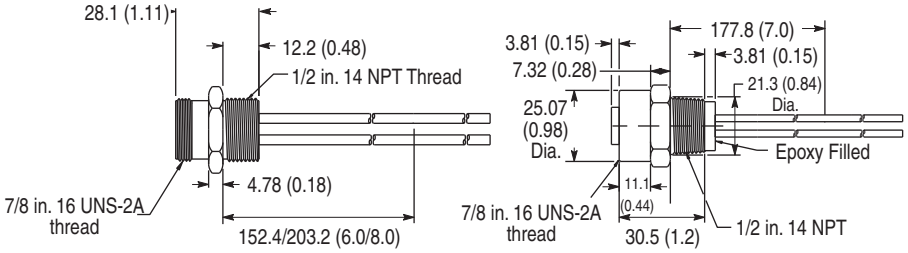

Specifications

Mechanical	
Coupling Nut	Black epoxy coated zinc
Overmold	Riteflex TPE
Insert	Yellow Riteflex TPE
Contacts	Brass/gold over palladium nickel
Electrical	
Assembly Rating	600V, 10 A
Environmental	
Enclosure Type Rating	IP67, NEMA 6P, 1200 psi washdown
Operating Temperature	-20…+90 °C (-4…+194 °F)

Pinout and Color Code

	Face View Pinout	
	6-pin/5-used	
	 Female	 Male
Color Code	1 Red (+) 2 Black (-) 3 Green (GND)	4 Blank/Not Used 5 Blue (S1) 6 White (S2)

Wiring Diagrams

E-stop out

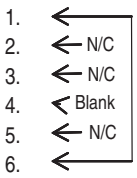

E-stop in

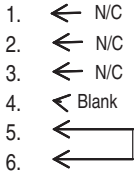

Approximate Dimensions

Dimensions in millimeters (inches). Dimensions are not intended to be used for manufacturing purposes and are subject to change.

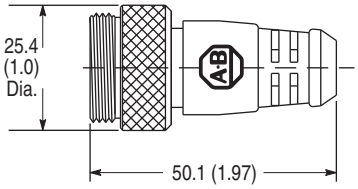

Locking Clips

Description	Material	Connector Styles
Clam shell design clips over the three-phase power media drop connection, to limit customer access.	ABS/PC plastics	M22 Connector
		M35 Connector

Sealing Caps

Connector Style	Material	Enclosure Type Rating	Thread Configuration	Dimensions
Control Power (M22)	Aluminum grey, anodized	IP20	External, male	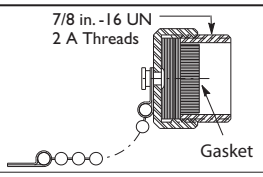
		IP67, NEMA 4 & 6P: 1200 psi washdown	Internal, female	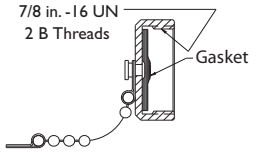
3-Phase Power (M35)			External, male	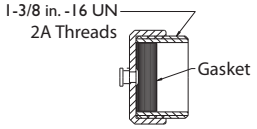
			Internal, female	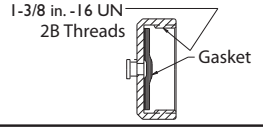

Example Stop Circuit for DeviceNet/ArmorPoint Bus Version

Pin 1	Red	No connection
Pin 2	Black	A2 (-)
Pin 3	Green	PE
Pin 4	Blank	Not used
Pin 5	Blue	A1 (+)
Pin 6	White	Not Used

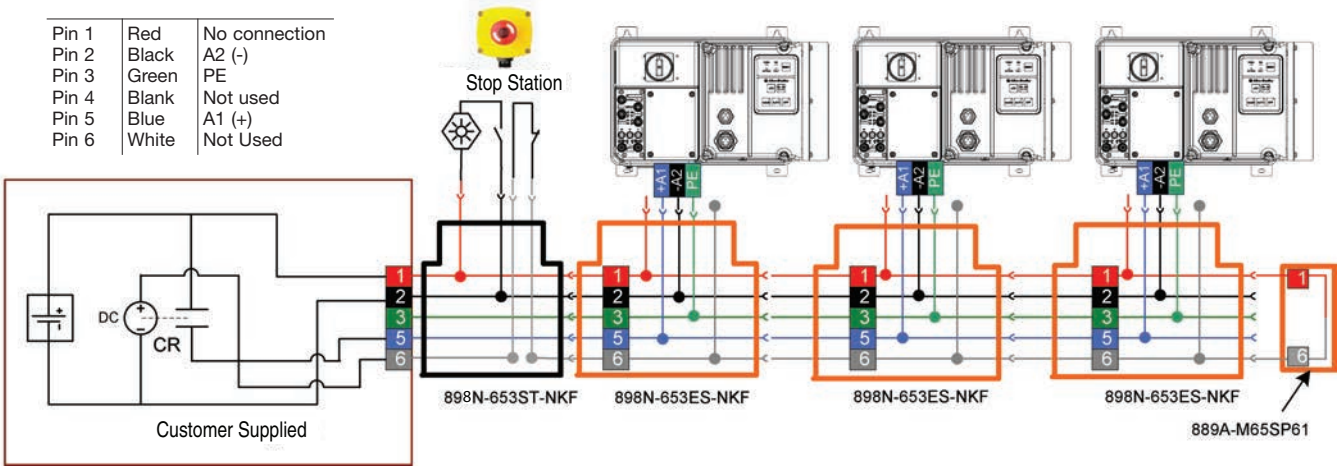

Example Stop Circuit for EtherNet/IP Bus Version

Pin 1	Red	A3
Pin 2	Black	A2 (-)
Pin 3	Green	PE
Pin 4	Blank	Not used
Pin 5	Blue	A1 (+)
Pin 6	White	Not Used

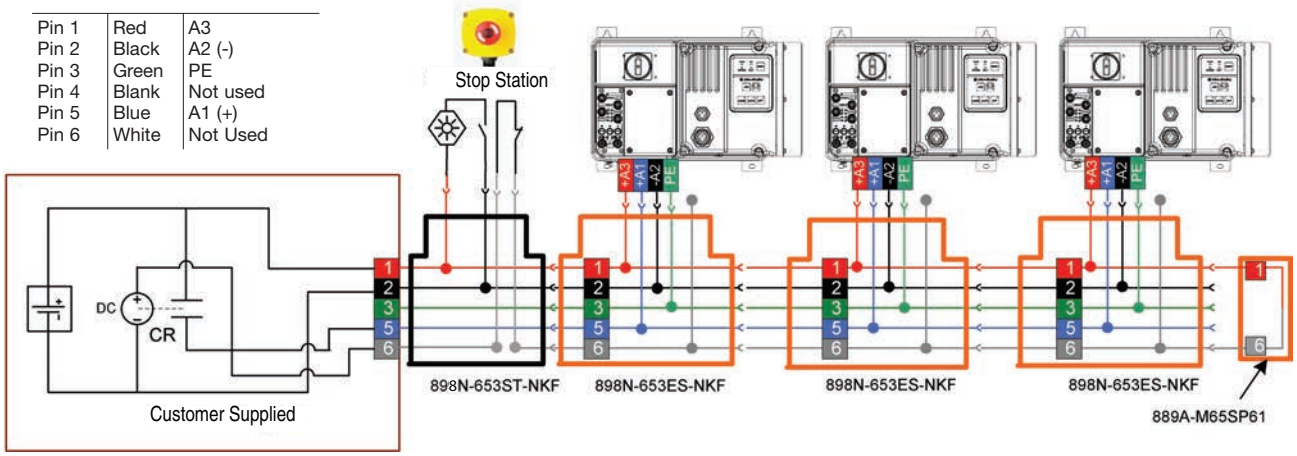

Important User Information

Read this document and the documents listed in the additional resources section about installation, configuration, and operation of this equipment before you install, configure, operate, or maintain this product. Users are required to familiarize themselves with installation and wiring instructions in addition to requirements of all applicable codes, laws, and standards.

Activities including installation, adjustments, putting into service, use, assembly, disassembly, and maintenance are required to be carried out by suitably trained personnel in accordance with applicable code of practice.

If this equipment is used in a manner not specified by the manufacturer, the protection provided by the equipment may be impaired.

In no event will Rockwell Automation, Inc. be responsible or liable for indirect or consequential damages resulting from the use or application of this equipment.

The examples and diagrams in this manual are included solely for illustrative purposes. Because of the many variables and requirements associated with any particular installation, Rockwell Automation, Inc. cannot assume responsibility or liability for actual use based on the examples and diagrams.

No patent liability is assumed by Rockwell Automation, Inc. with respect to use of information, circuits, equipment, or software described in this manual.

Reproduction of the contents of this manual, in whole or in part, without written permission of Rockwell Automation, Inc., is prohibited.

Documentation Feedback

Your comments will help us serve your documentation needs better. If you have any suggestions on how to improve this document, complete this form, publication RA-DU002, available at http://www.rockwellautomation.com/literature/.

ArmorConnect, ArmorStart, Allen-Bradley, Rockwell Software, Rockwell Automation, and LISTEN. THINK. SOLVE are trademarks of Rockwell Automation, Inc.
Trademarks not belonging to Rockwell Automation are property of their respective companies.

Rockwell Otomasyon Ticaret A.Ş., Kar Plaza İş Merkezi E Blok Kat:6 34752 İçerenköy, İstanbul, Tel: +90 (216) 5698400

www.rockwellautomation.com

Power, Control and Information Solutions Headquarters

Americas: Rockwell Automation, 1201 South Second Street, Milwaukee, WI 53204-2496 USA, Tel: (1) 414.382.2000, Fax: (1) 414.382.4444
Europe/Middle East/Africa: Rockwell Automation NV, Pegasus Park, De Kleetlaan 12a, 1831 Diegem, Belgium, Tel: (32) 2 663 0600, Fax: (32) 2 663 0640
Asia Pacific: Rockwell Automation, Level 14, Core F, Cyberport 3, 100 Cyberport Road, Hong Kong, Tel: (852) 2887 4788, Fax: (852) 2508 1846

Publication 280PWR-TD001A-EN-P - August 2014

Copyright © 2014 Rockwell Automation, Inc. All rights reserved. Printed in the U.S.A.