Technical Data

Original Instructions

PowerFlex 700S Drives with Phase II Control

Bulletin Number 20D

Topic	Page
Summary of Changes	2
Product Overview	3
Catalog Number Explanation	9
Product Selection	11
Factory Installed Options	15
User Installed Options	17
Installation Considerations	29
Power Terminal Block Specifications	37
Control Terminal Block Specifications	47
Drive Ratings	48
Drive Mounting Clearances and Dimensions	79
Specifications	103
Derating Guidelines	107
Carrier Derating Curves	108
Watts Loss Curves - Frames 10...14	115
Additional Resources	119

Allen Bradley 20D-P2-SLB0 | gesrepair.com

Summary of Changes

This publication contains the following new or updated information. This list includes substantive updates only and is not intended to reflect all changes.

Topic	Page
Corrected dimensions for Frame 5.	84
Added KCC and Ecodesign regulation (EU) 2019/1781, IE2 efficiency class, to Specifications table.	103
Updated certification data.	103

Product Overview

The PowerFlex® 700S AC drive with Phase II control offers high-performance drive control, advanced programming features, and built-in diagnostics for handling the most demanding applications. The PowerFlex 700S with a DriveLogix™ controller combines the powerful performance and flexible control of PowerFlex AC drives with the high-performance Logix engine to produce a highly functional, cost-effective drive and control solution.

PowerFlex 700S AC Drive with Slim Cassette

PowerFlex 700S AC Drive with Expanded Cassette

Packaging and Mounting

- The innovative bookshelf design allows **Zero-stacking™ drives** (or direct, side-by-side mounting). With no minimum spacing required between drives, valuable panel space is conserved and installation cost is reduced.

- The design of the PowerFlex family of drives incorporates proven **noise reduction components** on both the input and output of the drive. Many of the global EMC standards can be met and many noise-related application concerns can be reduced or eliminated using a standard "out-of-the-box" PowerFlex drive with no additional hardware or cost. By also incorporating higher rated components and significant voltage suppression devices for both phase-to-phase and phase-to-ground protection, power conditioning concerns and the need for additional hardware are significantly reduced.

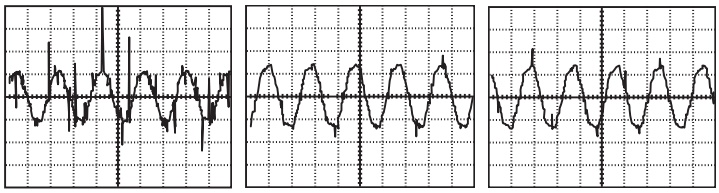

Noise Reduction Charts

- **Pull-apart** control terminal blocks for easy wiring and quick disconnect.

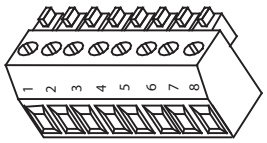

- **DriveLogix** offers embedded Logix control for application programmability and control of auxiliary functions in one package, the PowerFlex 700S drive with DriveLogix. The following features are included with DriveLogix:
  - Common programming environment and multiple programming languages supported by all Logix platforms.
  - Ladder Diagram, Function Block Diagram, Sequential Function Chart, and Structured Text.
  - Eight separate tasks, including one continuous task and seven periodic tasks. Each task can support up to 32 programs and an unlimited number of routines for program organization.
  - 1.5 Mb of standard user memory.
  - CompactFlash for non-volatile storage.
  - Local connections for up to 16 Compact I/O modules.
  - Communication options include the RS-232 port and embedded Ethernet.
  - Virtual backplane concept for program portability to other Logix platforms, seamless integration into the NetLinx architecture, and direct drive communication.

Start Up, Programming

- The PowerFlex 700S has optimized global voltage settings for quick configuration anywhere in the world. Multiple reset defaults make setup for your voltage/frequency fast and easy.
- An optional LCD Human Interface Module (HIM) provides programming, start up information, diagnostics, and other information in full, easy to understand text. The display is a 7 line by 21 character backlit LCD screen. Full numeric keypad and programming keys only styles are available.

Integrated Software

Connected Components Workbench

Connected Components Workbench™ software, offers device configuration, controller programming, and integration with HMI editor. Connected Components Workbench software is developed based on proven Rockwell Automation and Microsoft® Visual Studio technology. CCW has software compatibility with:

- RSLinx® Classic Lite version 2.59.02 or greater
- ControlFLASH™ version 11.00 or greater

DriveTools™ SP Software

A powerful personal computer-based software suite, for programming, configuration, and troubleshooting.

- DriveExecutive™ software - for online/offline configuration and management of drives and drive peripherals
- DriveObserver™ software - for real time trending of drive information

See the PowerFlex Low Voltage AC Drives Selection Guide, publication PFLEX-SG002, for information on other software configuration tools.

TIP DriveTools SP Software has been upgraded to Connected Components Workbench. DriveTools support can be found at the Product Compatibility Download Center rok.auto/pcdc, but is no longer available for sale.

Operation

- **Multiple high-performance motor control algorithms:** Flux Vector Control utilizes patented FORCE Technology for sensor and sensorless induction motor control and Brushless Permanent Magnet motor operation, provide maximum application flexibility.

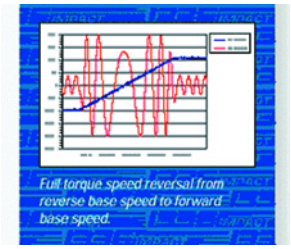

- An **array of feedback options**, including a standard incremental encoder, an optional incremental encoder, resolver, and high-resolution encoder feedback interface cards optimize the accuracy of speed and position regulators. Temposonics and Stahl SSI interface for linear feedback devices are also available.

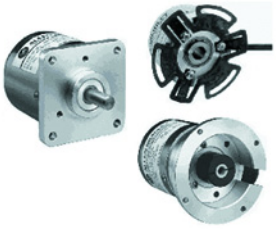

- An **integrated position loop** for applications from simple indexing to electronic line shaft.

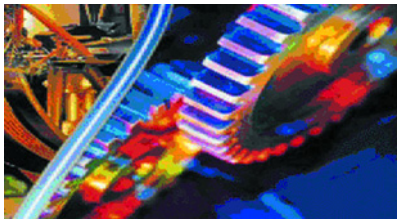

- **SynchLink**™, a high performance, high speed, drive-to-drive link for transmitting synchronized and application data. The SynchLink fiber-optic link provides the highest level of multiple drive coordination.

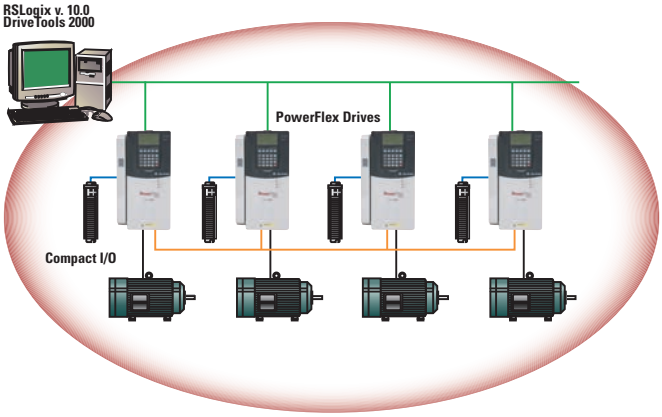

- Optional **internal communication** adapters provide fast and efficient control and/or data exchange with host controllers over popular interfaces. These interfaces include: DeviceNet, ControlNet, EtherNet/IP™, Profibus, Serial Communications, and other communication networks.

- Standard **chopper transistor** and separately mounted or drive mounted **resistors** (frames 1...9 only) provide cost effective dynamic braking solutions.

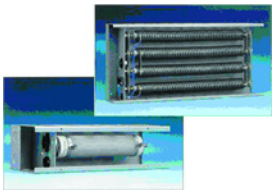

Support

Rockwell Automation is committed to maintaining and supporting Allen-Bradley® drives and installations. Included in this commitment is start-up support and consultation for drive applications.

ProtectionPlus Drive Start-up Services

With ProtectionPlus Drive Start-Up Services from Rockwell Automation, you can leverage the extensive product and industry experience of Rockwell Automation® technicians to quickly commission drives and reduce the time between integration and actual machine operation.

ProtectionPlus Drive Start-Up Services offer the following features:

- Verification of proper drive and motor installation, control and power wiring, and AC voltage and distribution network
- Power-up, drive checks, grounding checks and setup
- Custom drive configuration/tuning to meet specific application requirements
- Adjustment of operating parameters for optimal performance
- Documentation of drive and motor nameplate information, application information, drive settings, and operating parameters
- Extend an eligible product parts warranty and add a labor warranty (Warranty terms vary. Please see specific agreement terms.)

For more information about ProtectionPlus Drive Services, contact your local Rockwell Automation sales office or authorized distributor, or visit: http://www.rockwellautomation.com/services/.

SupportPlus

The SupportPlus program offers consultation on high-performance drive applications. SupportPlus uses expert level Rockwell Automation system engineers to support your engineering team. SupportPlus engineers will help layout appropriate architecture, configure drives, recommend programming techniques, and provide application assistance on the most effective ways to implement control solutions.

For more information, contact Allen-Bradley Drives Technical Support, M-F, 7:00 a.m. to 6:00 p.m. Central STD time: 262-512-8176 or see: http://www.ab.com/support/abdrives/

Drive Application Software

Drive Application Software brings together an outstanding range of application experience and performance drive products to provide you with pre-engineered and the most effective drive application solutions. For more information, see our web site: http://www.ab.com/linked/drives/drvappsw/

Performance

Digital Current Regulator outperforms older style analog regulators in speed, repeatability, and drift.

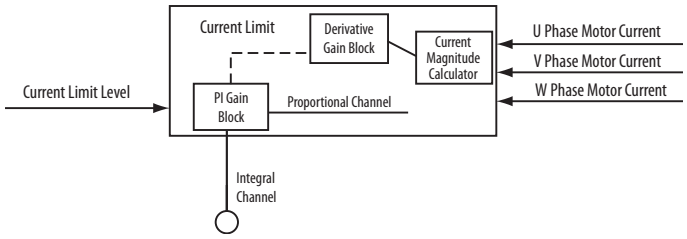

Negative Feed Forward reduces or eliminates overshoot during step speed changes. Helpful in preventing backup during stopping.

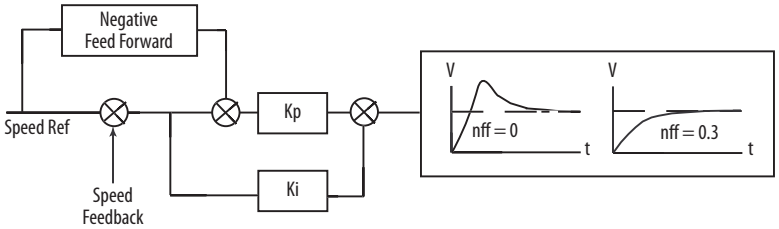

Coarse-to-Fine interpolation for **DriveLogix Motion**, direct positioning for precise control and point-to-point for indexing are all features of the **Integral Position Loop.** The loop easily handles applications such as simple indexing and electronic line shaft.

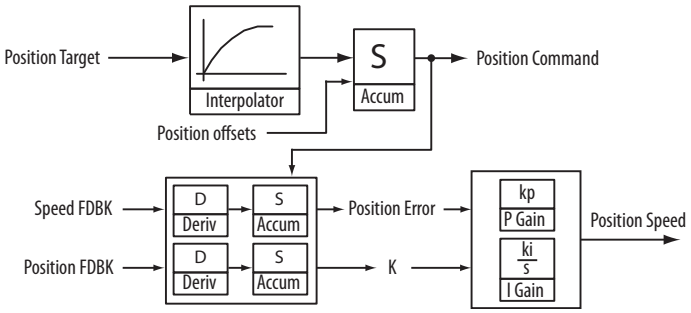

Advanced **Edge-to-Edge Algorithms** and pulse position averaging provide extremely accurate speed measurement and excellent performance at very low speed.

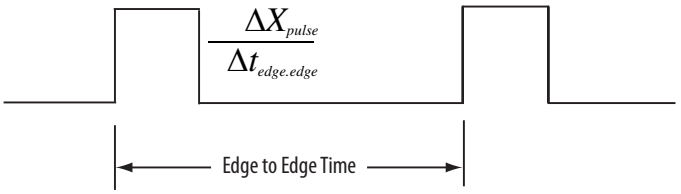

Servo Lock compensates for lost position during step loads to the velocity regulator. Offers optimum performance for draw applications and others.

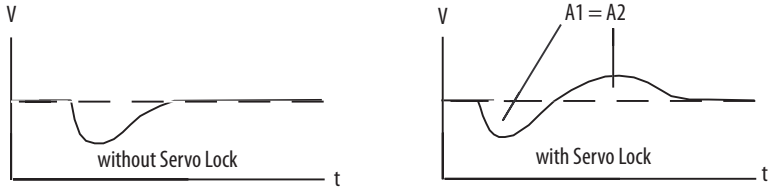

Velocity Response to Step Load

High-Speed Analog and Digital I/O execute in 0.5 ms or less to provide fast response and fast capture for registration information and position data. Output relays, optically isolated and differentially isolated I/O are supplied.

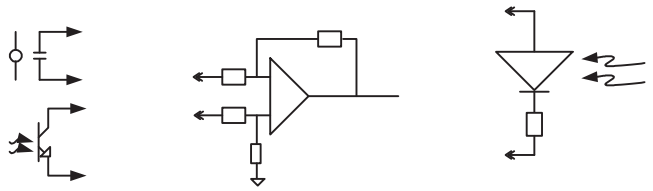

Inertia Adaptation stabilizes inertia disconnect due to gear boxes or flexible couplings. It also provides broadband resonance compensation, allowing up to 4x improvement to speed regulator bandwidth.

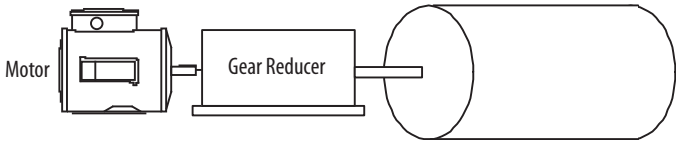

An **Enhanced Process Loop** executes six times faster than previous loops, providing greatly improved dynamic response in tension control applications.

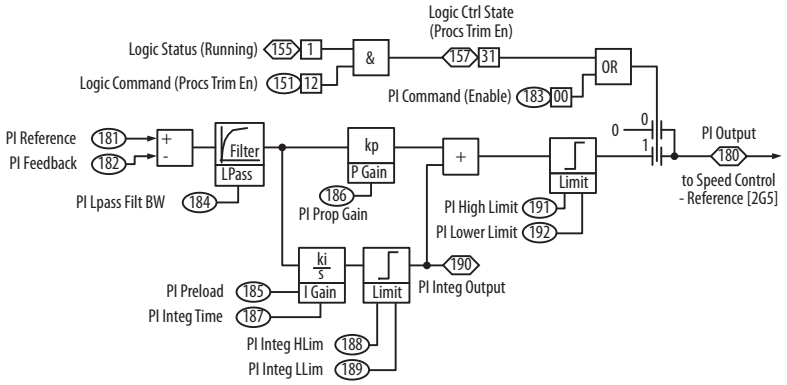

The **Control Loops** within each drive are **Synchronized**. In addition, the control loops for all drives on SynchLink are synchronized within micro-seconds. This provides exceptional link coordination and tracking for critical applications.

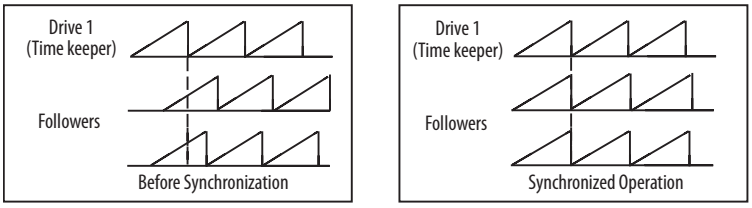

The **Enhanced Bus Regulator** reacts four times faster than previous products, providing quicker stops without overvoltage issues and outstanding performance in other regenerative applications.

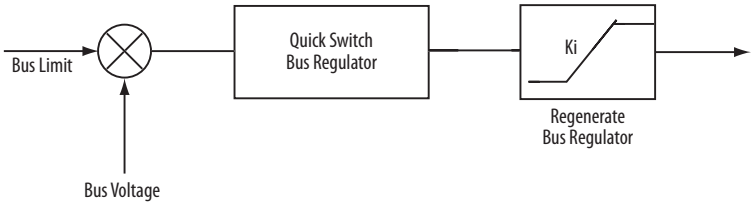

Catalog Number Explanation

1…3	4	5…7	8	9	10	11	12	13	14	15	16	17
20D	D	2P1	A	0	E	Y	N	A	N	A	N	E
a	*b*	*c*	*d*	*e*	*f*	*g*	*h*	*i*	*j*	*k*	*l*	*m*

a

Drive	
Code	Type
20D	PowerFlex 700S

b

Voltage Rating			
Code	Voltage	Ph.	Precharge
B(1)	240V AC	3 (6 pulse)	-
C(1)	400V AC	3 (6 pulse)	-
D(1)	480V AC	3 (6 pulse)	-
E(1)(2)	600V AC	3 (6 pulse)	-
F(3)	690V AC	3 (6 pulse)	-
H(3)	540V DC	-	N
J(3)	650V DC	-	N
K(3)	810V DC	-	N
M(3)	932V DC	-	N
N(4)	325V DC	-	Y
P(4)	540V DC	-	Y
R(4)	650V DC	-	Y
T(4)	810V DC	-	Y
W(4)	932V DC	-	Y

(1) For DC input on Frames 1…4, use the corresponding AC input code B, C, D, or E.
(2) 600V class drives below 77 Amps (Frames 0…4) are declared to meet the Low Voltage Directive. It is the responsibility of the user to determine compliance to the EMC directive.
(3) Frames 5 and greater.
(4) Frames 5 & 6 only.

d

Enclosure	
Code	Description
A(1)	IP20, NEMA Type 1 with Conformal Coat
B(2)	IP20 NEMA Type 1, MCC, with Conformal Coat
H(2)	IP54, NEMA Type 12, Rittal, with Conformal Coating
N(3)	Open/IP00, with Conformal Coat

(1) IP20 for Frames 1…6, IP21 for Frames 9 and greater.
(2) Frames 10 and greater only.
(3) Frames 9 and greater only.

e

HIM (Human Interface Machine)	
Code	Operator Interface
0	Blank Cover
3	Full Numeric LCD
C(1)	Full Numeric LCD, Door Mount

(1) Frames 10 and greater only.

f

Documentation	
Code	Documents
E	English Manual
N	No Documentation

g

Brake(1)	
Code	w/Brake IGBT
Y	Yes
N	No

(1) Brake IGBT is standard on Frames 1…3 and optional on Frames 4…9 only.

h

Brake Resistor	
Code	w/Resistor
Y(1)	Yes
N	No

(1) Not available for Frame 3 and greater.

i

Emission			
Code	CE Filter(1)	CM Choke	du/dt Filter
A(2)	Yes	Yes	No
B(3)	Yes	No	No
E(4)	Yes	No	Yes
N(5)	No	No	No

(1) CE Certification testing has not been performed on 600V class drives Frames 1…4.
(2) Frames 1…6 only.
(3) Frames 9 and greater only.
(4) Frame 14 only.
(5) For use on a high resistive ground, an ungrounded distribution system, or a B phase grounded distribution system (Frame 9 only).

j

Comm Slot	
Code	Version
N	None
C	DPI™ ControlNet (Coax)
D	DPI DeviceNet
E	DPI EtherNet/IP
1(1)	DriveLogix ControlNet (Coax)
2(1)	DriveLogix ControlNet Redundant (Coax)
3(1)	DriveLogix ControlNet (Fiber)
4(1)	DriveLogix ControlNet Redundant (Fiber)
5(1)	DriveLogix DeviceNet (Open Conn.)
6(1)	DriveLogix EtherNet/IP

(1) Comm Slot options 1…6 are discontinued. They may exist in older models.

k

Control Options(1)			
Code	Logix Expansion	SynchLink	Cassette
A	No	No	Expanded
B	No	Yes	Expanded
C	Yes	No	Expanded
D	Yes	Yes	Expanded
G(2)	—	No	Slim
H(2)	—	Yes	Slim

(1) Phase II control available only.
(2) Frames 1…9 only.

l

Feedback	
Code	Option
N(1)	Standard (Incremental Encoder)
A(2) (3) (4)	Resolver
B(2)(3)	Stegmann Hi-Resolution Encoder
C(2)(3)	Multi-Device Interface
E(2)	Second Encoder
S(2)	Safe Torque Off (w/2nd Encoder)
T(2)(3)	Stegmann Hi-Res Enc. (w/2nd Encoder)
U(2)(3)	Stegmann Hi-Res Enc. (w/Safe Torque Off)

(1) One encoder interface that is included with base drive.
(2) Expanded cassette is required.
(3) No longer available for sale as factory installed. They may exist in older models.
(4) The PowerFlex 700S drive is not CE Certified when the resolver feedback module is installed in the drive.

m

Additional Configuration	
Code	Description
E	Phase II Control
K	Phase II DriveLogix 5730
L(1) (2)	Phase II DriveLogix 5730 w/EtherNet/IP

(1) This is an embedded EtherNet/IP option that is only available with DriveLogix 5730.
(2) No longer available for sale as factory installed but can be ordered as a user installed kit. (kit 20D-DL2-ENET0).

c1

PowerFlex 700S ND Rating			
208/240V, 60 Hz Input			
Code	Amps	Hp	Frame
4P2	4.8	1.0	1
6P8	7.8	2.0	
9P6	11	3.0	
015	17.5	5.0	
022	25.3	7.5	
028	32.2	10	2
042	48.3	15	3
052	56	20	
070	78.2	25	4
080	92	30	
104	120	40	5
130	130	50	
154	177	60	6
192	221	75	
260	260	100	

c2

PowerFlex 700S ND Rating			
400V, 50 Hz Input			
Code	Amps	kW	Frame
2P1	2.1	0.75	1
3P5	3.5	1.5	
5P0	5.0	2.2	
8P7	8.7	4.0	
011	11.5	5.5	
015	15.4	7.5	
022	22	11	
030	30	15	2
037	37	18.5	
043	43	22	3
056	56	30	
072	72	37	
085	85	45	4
105	105	55	5
125	125	55	
170	170	90	6
205	205	110	
260	260	132	
261	261	132	9
300	300	160	
385	385	200	10
460	460	250	
500	500	250	
590	590	315	11
650	650	355	
730	730	400	
820	820	450	12
920	920	500	
1K0	1030	560	
1K1	1150	630	13
1K3	1300	710	
1K4	1450	800	

c3

PowerFlex 700S ND Rating			
480V, 60 Hz Input			
Code	Amps	Hp	Frame
2P1	2.1	1.0	1
3P4	3.4	2.0	
5P0	5	3.0	
8P0	8	5.0	
011	11	7.5	
014	14	10	
022	22	15	
027	27	20	2
034	34	25	
040	40	30	3
052	52	40	
065	65	50	
077	77	60	4
096	96	75	5
125	125	100	
156	156	125	6
180	180	150	
248	248	200	
261	261	200	9
300	300	250	
385	385	300	10
460	460	350	
500	500	450	
590	590	500	11
650	650	500	
730	730	600	
820	820	700	12
920	920	800	
1k0	1030	900	
1K1	1150	1000	13
1K3	1300	1200	
1K4	1450	1250	

c5

PowerFlex 700S ND Rating			
690V, 50 Hz Input(1)			
Code	Amps	kW	Frame
052	52	45	5
060	60	55	
082	82	75	
098	98	90	
119	119	110	6
142	142	132	
170	170	160	9
208	208	200	
261	261	250	10
325	325	315	
385	385	355	
416	416	400	
460	460	450	11
502	502	500	
590	590	560	
650	650	630	12
750	750	710	
820	820	800	
920	920	900	13
1K0	1030	1000	
1K1	1180	1100	
1K5	1500	1500	14

(1) CE Certification testing has not been performed on 600V class drives Frames 1…4.

c4

PowerFlex 700S ND Rating			
600V, 60 Hz Input(1)			
Code	Amps	Hp	Frame
1P7	1.7	0	1
2P7	2.7	2	
3P9	3.9	3	
6P1	6.1	5	
9P0	9	7.5	
011	11	10	
017	17	15	
022	22	20	2
027	27	25	
032	32	30	3
041	41	40	
052	52	50	
062	62	60	4
077	77	75	5
099	99	100	
125	125	125	6
144	144	150	
170	170	150	9
208	208	200	
261	261	250	10
325	325	350	
385	385	400	
416	416	450	
460	460	450	11
502	502	500	
590	590	600	
650	650	700	12
750	750	800	
820	820	900	
920	920	1000	13
1K0	1030	1100	
1K1	1180	1300	
1K5	1500	1600	14

(1) 600V class drives below 77 Amps (Frames 0…4) are declared to meet the Low Voltage Directive. It is the responsibility of the user to determine compliance to the EMC directive.

Product Selection

Frames 1…6 - IP20, NEMA/UL Type 1, (Position d = A)

208/240V AC, Six-pulse, Three-phase Drives

240V AC Input (1)					208V AC Input					IP20, NEMA/UL Type 1	Frame Size
Output Amp			Normal Duty HP	Heavy-Duty HP	Output Amp			Normal Duty kW	Heavy-Duty kW		
Cont.	1 Min	3 Sec.			Cont.	1 Min	3 Sec.			Cat. No., 20D…	
4.2	4.8	6.4	1	0.75	4.8	5.6	7	0.75	0.55	20DB4P2A0EYNANANE	1
6.8	9	12	2	1.5	7.8	10.4	13.8	1.5	1.1	20DB6P8A0EYNANANE	1
9.6	10.6	14.4	3	2	11	12.1	17	2.2	1.5	20DB9P6A0EYNANANE	1
15.3	16.8	23	5	3	17.5	19.3	26.3	4.0	3.0	20DB015A0EYNANANE	1
22	24.2	33	7.5	5	25.3	27.8	38	5.5	4.0	20DB022A0EYNANANE	1
28	33	44	10	7.5	32.2	38	50.6	7.5	5.5	20DB028A0EYNANANE	2
42	46.2	63	15	10	48.3	53.1	72.5	11	7.5	20DB042A0EYNANANE	3
52	63	80	20	15	56	64	86	15	11	20DB052A0EYNANANE	3
70	78	105	25	20	78.2	86	117.3	18.5	15	20DB070A0ENNANANE	4
80	105	136	30	25	92	117.3	156.4	22	18.5	20DB080A0ENNANANE	4
104 (80) (2)	115 (120)	175 (160)	40	30	120 (92)	132 (138)	175 (175)	30	22	20DB104A0ENNANANE	5
130 (104) (2)	143 (156)	175 (175)	50	40	130 (104)	143 (156)	175 (175)	37	30	20DB130A0ENNANANE	5
154 (130) (2)	169 (195)	231 (260)	60	50	177 (150)	195 (225)	266 (300)	45	37	20DB154A0ENNANANE	6
192 (154) (2)	211 (231)	288 (308)	75	60	221 (177)	243 (266)	308 (308)	55	45	20DB192A0ENNANANE	6
260 (205) (2)	286 (305)	390 (410)	100	75	260 (205)	286 (305)	390 (410)	66	55	20DB260A0ENNANANE	6

(1) Catalog number corresponds to output amps in this column. Drive must be programmed to lower voltage to obtain higher currents that are shown at right.
(2) These drives have dual current ratings; one for normal duty applications, and one for heavy-duty applications (in parentheses). The drive may be operated at either rating.

380…480V AC, Six-pulse, Three-phase Drives

480V AC Input (1)					380…400V AC Input					IP20, NEMA/UL Type 1	Frame Size
Output Amp			Normal Duty HP	Heavy-Duty HP	Output Amp			Normal Duty kW	Heavy-Duty kW		
Cont.	1 Min	3 Sec.			Cont.	1 Min	3 Sec.			Cat. No., 20D…	
2.1	2.4	3.2	1.0	0.75	2.1	2.4	3.2	0.75	0.55	20DD2P1A0EYNANANE	1
3.4	4.5	6	2.0	1.5	3.5	4.5	6	1.5	1.1	20DD3P4A0EYNANANE	1
5	5.5	7.5	3.0	2.0	5	5.5	7.5	2.2	1.5	20DD5P0A0EYNANANE	1
8	8.8	12	5.0	3.0	8.7	9.9	13.2	4.0	2.2	20DD8P0A0EYNANANE	1
11	12.1	16.5	7.5	5.0	11.5	13	17.4	5.5	4.0	20DD011A0EYNANANE	1
14	16.5	22	10	7.5	15.4	17.2	23.1	7.5	5.5	20DD014A0EYNANANE	1
22	24.2	33	15	10	22	24.2	33	11	7.5	20DD022A0EYNANANE	1
27	33	44	20	15	30	33	45	15	11	20DD027A0EYNANANE	2
34	40.5	54	25	20	37	45	60	18.5	15	20DD034A0EYNANANE	2
40	51	68	30	25	43	56	74	22	18.5	20DD040A0EYNANANE	3
52	60	80	40	30	56	64	86	30	22	20DD052A0EYNANANE	3
65	78	104	50	40	72	84	112	37	30	20DD065A0EYNANANE	3
77 (65) (2)	85 (98)	116 (130)	60	50	85 (72) (3)	94 (108)	128 (144)	45	37	20DD077A0ENNANANE	4
96 (77) (2)	106 (116)	144 (154)	75	60	105 (85)	116 (128)	158 (170)	55	45	20DD096A0ENNANANE	5
125 (96) (2)	138 (144)	163 (168)	100	75	125 (96)	138 (144)	163 (168)	55	45	20DD125A0ENNANANE	5
					140 (105)	154 (158)	210 (210)	75	55	20DC140A0ENNANANE (5)	5
156 (125) (2)	172 (188)	233 (250)	125	100	170 (140)	187 (210)	255 (280)	90	75	20DD156A0ENNANANE	6
180 (156) (2)	198 (234)	270 (312)	150	125	205 (170) (4)	220 (255)	289 (313)	110	90	20DD180A0ENNANANE	6
248 (180) (2)	273 (270)	372 (360)	200	150	260 (205)	286 (308)	390 (410)	132	110	20DD248A0ENNANANE	6

(1) Catalog number corresponds to output amps in this column. Drive must be programmed to lower voltage to obtain higher currents that are shown at right.
(2) These drives have dual current ratings; one for normal duty applications, and one for heavy duty (in parentheses). The drive may be operated at either rating.
(3) 380…400V, 85 A rating is limited to 45 °C surrounding air.
(4) 380…400V, 205 A rating is limited to 40 °C surrounding air.
(5) Catalog number corresponds to 380…400V AC input drive only.

600…690V AC, Six-pulse, Three-phase Drives

600V AC Input (1)(2)					690V AC Input (2)					IP20, NEMA/UL Type 1	Frame Size
Output Amp			Normal Duty HP	Heavy-Duty HP	Output Amp			Normal Duty kW	Heavy-Duty kW		
Cont.	1 Min	3 Sec.			Cont.	1 Min	3 Sec.			Cat. No., 20D…	
1.7	2	2.6	1.0	0.75						20DE1P7A0EYNANANE	1
2.7	3.6	4.8	2.0	1.5						20DE2P7A0EYNANANE	1
3.9	4.3	5.9	3.0	2.0						20DE3P9A0EYNANANE	1
6.1	6.7	9.2	5.0	3.0						20DE6P1A0EYNANANE	1
9	9.9	13.5	7.5	5.0						20DE9P0A0EYNANANE	1
11	13.5	18	10	7.5						20DE011A0EYNANANE	1
17	18.7	25.5	15	10						20DE017A0EYNANANE	1
22	25.5	34	20	15						20DE022A0EYNANANE	2
27	33	44	25	20						20DE027A0EYNANANE	2
32	40.5	54	30	25						20DE032A0EYNANANE	3
41	48	64	40	30						20DE041A0EYNANANE	3
52	61.5	82	50	40						20DE052A0EYNANANE	3
62	78	104	60	50						20DE062A0EYNANANE	4
					52 (46)	57 (69)	78 (92)	45	37.5	20DF052A0EYNANANE	5
					60 (52)	66 (78)	90 (104)	55	45	20DF062A0EYNANANE	5
77 (63) (3)	85 (94)	116 (126)	75	60	82 (60)	90 (90)	120 (123)	75	55	20DE077A0ENNANANE	5
99 (77) (3)	109 (116)	126 (138)	100	75	98 (82) (4)	108 (123)	127 (140)	90	75	20DE099A0ENNANANE	5
125 (99) (3)	138 (149)	188 (198)	125	100	119 (98)	131 (147)	179 (196)	110	90	20DE125A0ENNANANE	6
144 (125) (3)	158 (188)	216 (250)	150	125	142 (119)	156 (179)	213 (238)	132	110	20DE144A0ENNANANE	6

(1) Catalog number corresponds to output amps in this column (except for drive catalog numbers 20DF052 and 20DF062). Drive must be programmed to lower voltage to obtain higher currents that are shown at right.
(2) CE Certification testing has not been performed on 600V class drives Frames 1…4.
(3) These drives have dual current ratings; one for normal duty applications, and one for heavy-duty applications (in parentheses). The drive may be operated at either rating.
(4) Rating is limited to 40 °C surrounding air.

Frame 9 & Up - IP21, NEMA/UL Type 1, (Position d = A)

380…480V AC, Six-pulse, Three-phase Drives

480V AC Input (1)					380…400V AC Input					IP21, NEMA/UL Type 1	Frame Size
Output Amp			Normal Duty HP	Heavy-Duty HP	Output Amp			Normal Duty kW	Heavy-Duty kW		
Cont.	1 Min	3 Sec.			Cont.	1 Min	3 Sec.			Cat. No., 20D…	
261 (205) (2)	287 (308)	410 (410)	200	150	261 (205)	287 (308)	410 (410)	132	110	20DD261A0ENNBNANE	9
300 (245) (2)	330 (368)	450 (490)	250	200	300 (245)	330 (368)	450 (490)	160	130	20DD300A0ENNBNANE	9
385 (300) (2)	424 (450)	600 (600)	300	250	385 (300)	424 (450)	600 (600)	200	160	20DD385A0ENNBNANE	10
460 (385) (2)	506 (578)	770 (770)	350	300	460 (385)	506 (578)	770 (770)	250	200	20DD460A0ENNBNANE	10
500 (420) (2)	550 (630)	750 (840)	450	350	500 (420)	550 (630)	750 (840)	250	250	20DD500A0ENNBNANE	10
590 (520) (2)	649 (780)	956 (956)	500	450	590 (520)	649 (780)	956 (956)	315	250	20DD590A0ENNBNANE	11
650 (590) (2)	715 (885)	1062 (1062)	500	500	650 (590)	715 (885)	1062 (1062)	355	315	20DD650A0ENNBNANE	11
730 (650) (2)	803 (975)	1095 (1170)	600	500	730 (650)	803 (975)	1095 (1170)	400	355	20DD730A0ENNBNANE	11
820 (730) (2)	902 (1095)	1230 (1314)	700	600	820 (730)	902 (1095)	1230 (1314)	450	400	20DD820A0ENNBNANE	12
920 (820) (2)	1012 (1230)	1380 (1476)	800	700	920 (820)	1012 (1230)	1380 (1476)	500	450	20DD920A0ENNBNANE	12
1030 (920) (2)(2)	1133 (1370)	1555 (1600)	900	800	1030 (920)	1133 (1370)	1555 (1600)	560	500	20DD1K0A0ENNBNANE	12
1150 (1030) (2)	1265 (1545)	1620 (1620)	1000	900	1150 (1030)	1265 (1545)	1620 (1620)	630	560	20DD1K1A0ENNBNANE	13
1300 (1150) (2)	1430 (1725)	2079 (2079)	1200	1000	1300 (1150)	1430 (1725)	2079 (2079)	710	630	20DD1K3A0ENNBNANE	13
1450 (1200) (2)	1595 (1800)	2175 (2400)	1250	1000	1450 (1200)	1595 (1800)	2175 (2400)	800	710	20DD1K4A0ENNBNANE	13

(1) Catalog number corresponds to output amps in this column. Drive must be programmed to lower voltage to obtain higher currents that are shown at right.
(2) Rating is limited to 35 °C surrounding air.

600…690V AC, Six-pulse, Three-phase Drives

600V AC Input (1)(2)					690V AC Input (2)					IP21, NEMA/UL Type 1	Frame Size
Output Amp			Normal Duty HP	Heavy-Duty HP	Output Amp			Normal Duty kW	Heavy-Duty kW		
Cont.	1 Min	3 Sec.			Cont.	1 Min	3 Sec.			Cat. No., 20D…	
170 (144) (3)	187 (216)	245 (245)	150	150	170 (144)	187 (216)	245 (245)	160	132	20DE170A0ENNBNANE	9
208 (170) (3)(3)	230 (250)	289 (289)	200	150	208 (170) (4)	230 (250)	289 (289)	200	160	20DE208A0ENNBNANE	9
261 (208) (3)	287 (312)	375 (375)	250	200	261 (208)	287 (312)	375 (375)	250	200	20DE261A0ENNBNANE	10
325 (261) (3)	358 (392)	470 (470)	350	250	325 (261)	358 (392)	470 (470)	315	250	20DE325A0ENNBNANE	10
385 (325) (3)	424 (488)	585 (585)	400	350	385 (325)	424 (488)	585 (585)	355	315	20DE385A0ENNBNANE	10
416 (325) (3)	458 (488)	585 (585)	450	350	416 (325)	458 (488)	585 (585)	400	315	20DE416A0ENNBNANE	10
460 (385) (3)	506 (578)	693 (693)	450	400	460 (385)	506 (578)	693 (693)	450	355	20DE460A0ENNBNANE	11
502 (460) (3)	552 (690)	828 (828)	500	450	502 (460)	552 (690)	828 (828)	500	450	20DE502A0ENNBNANE	11
590 (502) (3)	649 (753)	904 (904)	600	500	590 (502)	649 (753)	904 (904)	560	500	20DE590A0ENNBNANE	11
650 (590) (3)	715 (885)	1062 (1062)	700	650	650 (590)	715 (885)	1062 (1062)	630	560	20DE650A0ENNBNANE	12
750 (650) (3)	825 (975)	1170 (1170)	800	700	750 (650)	825 (975)	1170 (1170)	710	630	20DE750A0ENNBNANE	12
820 (750) (3)(4)(4)	902 (975)	1170 (1170)	900	700	820 (750)	902 (975)	1170 (1170)	800	630	20DE820A0ENNBNANE	12
920 (820) (3)	1012 (1230)	1380 (1410)	1000	900	920 (820)	1012 (1230)	1380 (1410)	900	800	20DE920A0ENNBNANE	13
1030 (920) (3)	1133 (1380)	1545 (1755)	1100	1000	1030 (920)	1133 (1380)	1545 (1755)	1000	900	20DE1K0A0ENNBNANE	13
1180 (1030) (3)	1298 (1463)	1755 (1755)	1300	1100	1180 (1030)	1298 (1463)	1755 (1755)	1100	1000	20DE1K1A0ENNBNANE	13
1500 (1300) (3)	1650 (1950)	2250 (2340)	1600	1400	1500 (1300)	1650 (1950)	2250 (2340)	1500	1300	20DE1K5A0ENNBNANE	14

(1) Catalog number corresponds to output amps in this column (except for drive catalog numbers 20DF052 and 20DF062). Drive must be programmed to lower voltage to obtain higher currents that are shown at right.
(2) CE Certification testing has not been performed on 600V class drives Frames 1…4.
(3) Rating is limited to 35 °C surrounding air.
(4) 600V class drives at 820 amps (ND) such as 20DF820 & 20DE820 are only capable of producing 95% of starting torque under 10 Hz.

IP20, NEMA/UL Type 1, MCC (Position d = B)

380…480V AC, Six-pulse, Three-phase Drives

480V AC Input (1)					380…400V AC Input					IP20, NEMA/UL Type 1	Frame Size
Output Amp			Normal Duty HP	Heavy-Duty HP	Output Amp			Normal Duty kW	Heavy-Duty kW		
Cont.	1 Min	3 Sec.			Cont.	1 Min	3 Sec.			Cat. No., 20D…	
385 (300) (2)	424 (450)	600 (600)	300	250	385 (300)	424 (450)	600 (600)	200	160	20DD385B0ENNBNANE	10
460 (385) (2)	506 (578)	770 (770)	350	300	460 (385)	506 (578)	770 (770)	250	200	20DD460B0ENNBNANE	10
500 (420) (2)	550 (630)	750 (840)	450	350	500 (420)	550 (630)	750 (840)	250	250	20DD500B0ENNBNANE	10
590 (520) (2)	649 (780)	956 (956)	500	450	590 (520)	649 (780	956 (956)	315	250	20DD590B0ENNBNANE	11
650 (590) (2)	715 (885)	1062 (1062)	500	500	650 (590)	715 (885)	1062 (1062)	355	315	20DD650B0ENNBNANE	11
730 (650) (2)	803 (975)	1095 (1170)	600	500	730 (650)	803 (975)	1095 (1170)	400	355	20DD730B0ENNBNANE	11
820 (730) (2)	902 (1095)	1230 (1314)	700	600	820 (730)	902 (1095)	1230 (1314)	450	400	20DD820B0ENNBNANE	12
920 (820)	1012 (1230)	1380 (1476)	800	700	920 (820)	1012 (1230)	1380 (1476)	500	450	20DD920B0ENNBNANE	12
1030 (920) (2)(3)	1133 (1370)	1555 (1600)	900	800	1030 (920)	1133 (1370)	1555 (1600)	560	500	20DD1K0B0ENNBNANE	12

(1) Catalog number corresponds to output amps in this column. Drive must be programmed to lower voltage to obtain higher currents that are shown at right.
(2) These drives have dual current ratings; one for normal duty applications, and one for heavy duty (in parentheses). The drive may be operated at either rating.
(3) Rating is limited to 35 °C surrounding air.

600…690V AC, Six-pulse, Three-phase Drives

600…690V AC Input					IP20, NEMA/UL Type 1	Frame Size
Output Amp			Normal Duty HP	Heavy-Duty HP		
Cont.[1]	1 Min	3 Sec.			Cat. No., 20D…	
261 (208) [2]	287 (312)	375 (375)	250	200	20DE261B0ENNBNANE	10
325 (261) [2]	358 (392)	470 (470)	350	250	20DE325B0ENNBNANE	10
385 (325) [2]	424 (488)	585 (585)	400	350	20DE385B0ENNBNANE	10
416 (325) [2]	458 (488)	585 (585)	450	350	20DE416B0ENNBNANE	10
460 (385) [2]	506 (578)	693 (693)	450	400	20DE460B0ENNBNANE	11
502 (460) [2]	552 (690)	828 (828)	500	450	20DE502B0ENNBNANE	11
590 (502) [2]	649 (753)	904 (904)	600	500	20DE590B0ENNBNANE	11
650 (590) [2]	715 (885)	1062 (1062)	700	650	20DE650B0ENNBNANE	12
750 (650) [2]	825 (975)	1170 (1170)	800	700	20DE750B0ENNBNANE	12
820 (750) [2][3][4]	902 (975)	1170 (1170)	900	700	20DE820B0ENNBNANE	12

(1) Catalog number corresponds to output amps in this column.
(2) These drives have dual current ratings; one for normal duty applications, and one for heavy-duty applications (in parentheses). The drive may be operated at either rating.
(3) Rating is limited to 35 °C surrounding air.
(4) 600V class drives at 820 amps (ND) such as 20DF820 & 20DE820 are only capable of producing 95% of starting torque under 10 Hz.

IP20, NEMA/UL Type 1, DC Input Drives

Note: DC input for Frames 1...4 use the same code as AC input. See the tables below for frames 5 and 6.

325V DC Input Drives

325V DC Input [1]					280V DC Input					DC Precharge	IP20, NEMA/UL Type 1	Frame Size
Output Amp			Normal Duty HP	Heavy-Duty HP	Output Amp			Normal Duty kW	Heavy-Duty kW			
Cont.	1 Min	3 Sec.			Cont.	1 Min	3 Sec.				Cat. No., 20D…	
104 (80) [2]	115 (120)	175 (160)	40	30	120 (92)	132 (138)	175 (175)	30	22	Y	20DN104A0ENNANANE	5
154 (130) [2]	169 (195)	231 (260)	60	50	177 (150)	195 (225)	266 (300)	45	37	Y	20DN154A0ENNANANE	6
192 (154) [2]	211 (231)	288 (308)	75	60	221 (177)	243 (266)	308 (308)	55	45	Y	20DN192A0ENNANANE	6
260 (205) [2]	286 (305)	390 (410)	100	75	260 (205)	286 (305)	390 (410)	66	55	Y	20DN260A0ENNANANE	6

(1) Catalog number corresponds to output amps in this column. Drive must be programmed to lower voltage to obtain higher currents that are shown at right.
(2) Frame 5 and 6 drives have dual current ratings; one for normal duty applications, and one for heavy-duty applications (in parentheses). The drive may be operated at either rating.

650V DC Input Drives

650V DC Input [1]					540V DC Input					DC Precharge	IP20, NEMA/UL Type 1	Frame Size
Output Amp			Normal Duty HP	Heavy-Duty HP	Output Amp			Normal Duty kW	Heavy-Duty kW			
Cont.	1 Min	3 Sec.			Cont.	1 Min	3 Sec.				Cat. No., 20D…	
96 (77) [2]	106 (116)	144 (154)	75	60	105 (85)	116 (128)	158 (170)	55	45	N	20DJ096A0ENNANANE	5
96 (77) [2]	106 (116)	144 (154)	75	60	105 (85)	116 (128)	158 (170)	55	45	Y	20DR096A0ENNANANE	5
125 (96) [2]	138 (144)	163 (168)	100	75	125 (96)	138 (144)	163 (168)	55	45	N	20DJ125A0ENNANANE	5
125 (96) [2]	138 (144)	163 (168)	100	75	125 (96)	138 (144)	163 (168)	55	45	Y	20DR125A0ENNANANE	5
156 (125) [2]	172 (188)	233 (250)	125	100	170 (140)	187 (210)	255 (280)	90	75	N	20DJ156A0ENNANANE	6
156 (125) [2]	172 (188)	233 (250)	125	100	170 (140)	187 (210)	255 (280)	90	75	Y	20DR156A0ENNANANE	6
180 (156) [2]	198 (234)	270 (312)	150	125	205 (170) [4]	220 (255)	289 (313)	110	90	N	20DJ180A0ENNANANE	6
180 (156) [2]	198 (234)	270 (312)	150	125	205 (170) [4]	220 (255)	289 (313)	110	90	Y	20DR180A0ENNANANE	6
248 (180) [2][3]	273 (270)	372 (360)	200	150	260 (205) [3]	286 (308)	390 (410)	132	110	N	20DJ248A0ENNANANE	6
248 (180) [2][3]	273 (270)	372 (360)	200	150	260 (205) [3]	286 (308)	390 (410)	132	110	Y	20DR248A0ENNANANE	6

(1) Catalog number corresponds to output amps in this column. Drive must be programmed to lower voltage to obtain higher currents that are shown at right.
(2) Frame 5 and 6 drives have dual current ratings; one for normal duty applications, and one for heavy-duty applications (in parentheses). The drive may be operated at either rating.
(3) Rating is limited to 45 °C surrounding air.
(4) Rating is limited to 40 °C surrounding air.

810V DC Input Drives

810 DC Input (1)					932 DC Input					DC Precharge	IP20, NEMA/UL Type 1	Frame Size
Output Amp			Normal Duty HP	Heavy-Duty HP	Output Amp			Normal Duty kW	Heavy-Duty kW			
Cont.	1 Min	3 Sec.			Cont.	1 Min	3 Sec.				Cat. No., 20D…	
99 (77) (2)(3)	109 (116)	126 (138)	100	75	98 (82) (3)	108 (123)	127 (140)	90	75	Y	20DT099A0ENNANANE	5
144 (125) (2)	158 (188)	216 (250)	150	125	142 (119)	156 (179)	213 (238)	132	110	Y	20DT144A0ENNANANE	6

(1) Catalog number corresponds to output amps in this column. Drive must be programmed to lower voltage to obtain higher currents that are shown at right.
(2) Frame 5 and 6 drives have dual current ratings; one for normal duty applications, and one for heavy-duty applications (in parentheses). The drive may be operated at either rating.
(3) Rating is limited to 40 °C surrounding air.

Factory Installed Options

Human Interface Modules IP20 - NEMA/UL Type 1 (Position e)

Cat. Code: 0
No HIM (Blank Plate)

Cat. Code: 3
LCD Display, Full Numeric Keypad

Cat. Code: C
Door Mounted Bezel LCD Display, Full Numeric Keypad Frame 10 and larger

Documentation

Description	Cat. Code (Position f)
English Manual	E
No Manual	N

Internal Brake IGBT

Drive Input Voltage	Brake IGBT	Frame	Cat. Code (Position g)
208…480V AC	Standard	1…3	Y
	Optional	4	N(1)
		5	N(1)
		6	N(1)
		9	N(1)

(1) By default, frames 4…9 are not equipped with a brake IGBT. A brake IGBT can be added by choosing Y (yes) in position ‘g’ of the catalog string.

Internal Dynamic Brake Resistors

These resistors have a limited duty cycle. See the PowerFlex Dynamic Braking Resistor Calculator guide, publication PFLEX-AT001, to determine if an internal resistor will be sufficient for your application. An external resistor may be required.

Drive Input Voltage	Frame	Brake Resistance	Cat. Code
		W	(Position h)
208…240V AC	1 (1.0…5.0 HP)	62	Y
	1 (7.5 Hp)	22	Y
	2	22	Y
380…600V AC	1	115	Y
	2	68	Y
	All	–	N

Internal EMC Filter

Drive Input Voltage	Frame	CE Filter	Cat. Code
			(Position i)
208…240V AC	1…6	with Filter	A
380…480V AC	1…6	with Filter	A
380…500V AC	9	No Filter (1)	N
380…500V AC	9 and larger	with Filter	B
600…690V AC	1…6	with Filter	A

(1) For use on a high resistive ground or ungrounded distribution system.

Internal Communication Adapters

Description	Cat. Code
	(Position j)
None	N
ControlNet Communication Adapter (Coax)	C
DeviceNet Communication Adapter	D
EtherNet/IP Communication Adapter	E

Control Options

Control Option	Description	Cat. Code
		(Position k)
Phase II Control	Expanded Cassette Only	A
	Expanded Cassette w/SynchLink	B
	Expanded Cassette w/Logix Expansion Board	C
	Expanded Cassette w/Logix Expansion Board and SynchLink	D
	Slim Cassette	G (1)
	Slim Cassette w/SynchLink	H (1)

(1) Only available for frames 1…9

Feedback Options

Description	Cat. Code
	(Position l)
No Option (includes Standard Encoder Interface)	N
Second Encoder, 5V or 12V Configurable by the Drive (1)	E
DriveGuard® Safe Torque Off (w/2nd Encoder) (1)	S

(1) Requires Expanded Cassette.

User Installed Options

Human Interface Modules

No HIM (Blank Plate)
20-HIM-A0

LCD Display, Full Numeric Keypad
20-HIM-A3

LCD Display, Programmer Only
20-HIM-A5

Remote (Panel Mount) LCD Display, Full Numeric Keypad
20-HIM-C3S (1)(2)

Remote (Panel Mount) LCD Display, Programmer Only
20-HIM-C5S (1)(2)

LCD Display, Full Numeric Keypad, Handheld/Local, Drive Mounted, NEMA Type 1
20-HIM-A6(1)(2)

(1) For indoor use only.
(2) Includes a 1202-C30 interface cable (3 meters) for connection to drive.

Human Interface Module Accessories

Description	Cat. No.
Bezel Kit for LCD HIMs, NEMA/UL Type 1 (1)	20-HIM-B1
PowerFlex HIM Interface Cable, 1 m (39 in) (2)	20-HIM-H10
Cable Kit (Plug-Socket) (3)	
0.33 Meters (1.1 Feet)	1202-H03
1 Meter (3.3 Feet)	1202-H10
3 Meter (9.8 Feet)	1202-H30
9 Meter (29.5 Feet)	1202-H90
DPI/SCANport™ One to Two Port Splitter Cable	1203-S03

(1) Includes an interface cable (1202-C30) for connection to drive.
(2) Required only when HIM is used as handheld or remote.
(3) Required in addition to 20-HIM-H10 for distances up to a total maximum of 10 Meters (32.8 Feet).

Communication Option Kits

Description	Cat. No.
ControlNet Communication Adapter (Coax)	20-COMM-C
DeviceNet Communication Adapter	20-COMM-D
EtherNet/IP Communication Adapter	20-COMM-E
HVAC Communication Adapter (1)	20-COMM-H
CANopen Communication Adapter	20-COMM-K
Modbus/TCP Communication Adapter	20-COMM-M
PROFIBUS DP Communication Adapter	20-COMM-P
ControlNet Communication Adapter (Fiber)	20-COMM-Q
RS485 DF1 Communication Adapter	20-COMM-S
Dual-Port EtherNet/IP Communication Adapter	20-COMM-ER
DriveLogix 5730 Comm Option, Embedded EtherNet/IP	20D-DL2-ENET0
External Communications Kit Power Supply	20-XCOMM-AC-PS1
DPI External Communications Kit(2)	20-XCOMMDC-BASE
External DPI I/O Option Board (2)	20-XCOMMIO-OPT1
Compact I/O Module (3 Channel)	1769-SM1

(1) For use only in Modbus RTU mode.
(2) For use only with DPI External Communications Kits 20-XCOMM-DCBASE.

Communication Accessories

Description	Cat. No.
Serial Null Modem Adapter	1203-SNM
Smart Self-powered Serial Converter (RS232) includes 1203-SFC and 1202-C10 Cables	1203-SSS
Universal Serial Bus (USB) Converter includes 2 m USB, 20-HIM-H10 and 22-HIM-H10 Cables	1203-USB
ControlNet Ex Right-Angle T-Tap 1 Meter Coax Cable Assembly	1786-TPR

Auxiliary Control Power Supply

Description	Cat. No.
Auxiliary Control Power Supply	20-24V-AUX1

Accessories

Note: See publication number 1756-TD008 for details on SynchLink.

Description	Cat. No.
SynchLink Board	20D-P2-SLB0
SynchLink Fiber Base Block	1751-SLBA
SynchLink 4-Port Fiber Splitter Block	1751-SL4SP
SynchLink Fiber Bypass Switch Block	1751-SLBP
3 Meter Fiber Link for Power Monitor/SynchLink (Qty 2)	1403-CF003
5 Meter Fiber Link for Power Monitor/SynchLink (Qty 2)	1403-CF005
10 Meter Fiber Link for Power Monitor/SynchLink (Qty 2)	1403-CF010

Feedback Option Kits

Description	Cat. No.
Multi-Device Interface (1)	20D-MDI-C2
DriveGuard Safe Torque Off (w/2nd Encoder) (1)	20D-P2-DG01
Second Encoder, 5V/12V (1)	20D-P2-ENC0
Resolver (1) (2)	20D-RES-A1
Stegmann High-Resolution Hyperface Encoder (1)	20D-STEG-B1

(1) Requires Expanded Cassette.
(2) The PowerFlex 700S drive is not CE Certified when the resolver feedback module is installed in the drive.

DriveLogix Option Kits

Description	Cat. No.
Logix Expansion board for DriveLogix 5730 (1)	20D-DL2-LEB0
Industrial Compact Flash 64 Megabyte Memory Card for DriveLogix 5730	1784-CF128

(1) Requires Expanded Cassette.

DriveLogix I/O Cables

Description	Cat. No.
DriveLogix 5730 - Compact I/O cable, 3.28 ft. (1 meter), Left Bus Cap (1)(2)	20D-DL2-CL3
DriveLogix 5730 - Compact I/O cable, 3.28 ft. (1 meter), Right Bus Cap (1)(2)	20D-DL2-CR3
RSLogix® 5000 RS-232 Serial Programming Cable	1756-CP3

(1) Requires Expanded Cassette.
(2) See publication 1769-SG001 for details and selection of Compact I/O.

1492 Wiring System Modules and Cables

1492 wiring system modules and cables provide an easy means to extend drive control wiring. A pre-wired cable (available in various lengths) plugs into the appropriate drive I/O terminal block. The remaining cable end plugs into the wiring module, which provides a terminal block for direct I/O connection. See the Digital/Analog Programmable Controller Wiring Systems Technical Data, publication 1492-TD008, for detailed information.

1492 Wiring Module and Cable Selection

700S Drive I/O	Wiring Module Description	Wiring Module Cat. No.		Use with Cable (See below…)
		Fixed Terminal Block	Removable Terminal Block	
DC Discrete Digital I/O (TB2)	Standard, 264V AC/DC	1492-IFM20F	1492-RIFM20F	1492-CABxxxA7S
	Narrow Standard, 132V AC/DC	1492-IFM20FN	1492-RIFM20FN	1492-CABxxxA7S
	Extra Terminals (2 per I/O), 264V AC/DC	1492-IFM20F-2	1492-RIFM20F-2	1492-CABxxxA7S
Analog I/O (TB1)	6 Channel Isolated - 3 Terminals/Channel	1492-AIFM6S-3	1492-RAIFM6S-3	1492-ACABxxxZ7S
Encoder	2 Channel Encoder Input - 4 Outputs	1492-AIFMCE4	–	1492-ACABxxxX7S
	2 Channel Fused Encoder Input - 4 Fused Outputs	1492-AIFMCE4-F	–	1492-ACABxxxX7S

Pre-wired Cable Assemblies

Description	Cat. No.
Pre-Wired Cable for Analog I/O	
0.5 Meter (1.6 Feet)	1492-ACAB005Z7S
1.0 Meter (3.3 Feet)	1492-ACAB010Z7S
2.5 Meters (8.2 Feet)	1492-ACAB025Z7S
5.0 Meters (16.4 Feet)	1492-ACAB050Z7S
Pre-Wired Cable for Discrete DC I/O	
0.5 Meter (1.6 Feet)	1492-CAB005A7S
1.0 Meter (3.3 Feet)	1492-CAB010A7S
2.5 Meters (8.2 Feet)	1492-CAB025A7S
5.0 Meters (16.4 Feet)	1492-CAB050A7S
Pre-Wired Cable for Encoder	
0.5 Meter (1.6 Feet)	1492-ACAB005X7S
1.0 Meter (3.3 Feet)	1492-ACAB010X7S
2.5 Meters (8.2 Feet)	1492-ACAB025X7S
5.0 Meters (16.4 Feet)	1492-ACAB050X7S

Phase II Drive Control Kits

Description	Cat. No.
PowerFlex 700S Phase II Control with Expanded Cassette	20D-P2-CKE2
PowerFlex 700S Phase II Control with Slim Cassette	20D-P2-CKS2
PowerFlex 700S DriveLogix 5730 Phase II Control with Expanded Cassette	20D-DL2-CKE2
PowerFlex 700S DriveLogix 5730 Phase II Control with Slim Cassette	20D-DL2-CKS2

Internal Dynamic Brake Resistor Kits

These resistors have a limited duty cycle. See the PowerFlex Dynamic Braking Resistor Calculator guide, publication PFLEX-AT001, to determine if an internal resistor will be sufficient for your application. An external resistor may be required.

Drive Input Voltage	Brake Resistance (Ω)	Frame	Cat. No.
208…240V AC	62	1 (1.0…5.0 HP)	20BB-DB1-1
	22	1 (7.5 HP)	20BB-DB2-1
	22	2	20BB-DB1-2
380…600V AC	115	1	20BD-DB1-1
	68	2	20BD-DB1-2

Terminators

Description (1)	Cat. No.
For use with 3.7 kW (5 Hp) and below drives	1204-TFA1
For use with 1.5 kW (2 Hp) & up drives	1204-TFB2

(1) See Appendix A of publication DRIVES-IN001 for selection information.

Reflected Wave Reduction Modules w/Common Mode Choke

Description (1)	Cat. No.
17 A with Common Mode Choke	1204-RWC-17-A

(1) See Appendix A of publication DRIVES-IN001 for selection information.

Reflected Wave Reduction Modules

Voltage	Drive Cat. No.	ND HP	Cat. No.	Voltage	Drive Cat. No.	ND HP	Cat. No.
480V AC	20DD8P0	5	1321-RWR8-DP	600V AC	20DE6P1	5	1321-RWR8-EP
	20DD011	8	1321-RWR12-DP		20DE9P0	8	1321-RWR8-EP
	20DD014	10	1321-RWR18-DP		20DE011	10	1321-RWR12-EP
	20DD022	15	1321-RWR25-DP		20DE017	15	1321-RWR18-EP
	20DD027	20	1321-RWR25-DP		20DE022	20	1321-RWR25-EP
	20DD034	25	1321-RWR35-DP		20DE027	25	1321-RWR25-EP
	20DD040	30	1321-RWR45-DP		20DE032	30	1321-RWR35-EP
	20DD052	40	1321-RWR55-DP		20DE041	40	1321-RWR45-EP
	20DD065	50	1321-RWR80-DP		20DE052	50	1321-RWR55-EP
	20DD077	60	1321-RWR80-DP		20DE062	60	1321-RWR80-EP
	20DD096	75	1321-RWR100-DP		20DE077	75	1321-RWR80-EP
	20DD125	100	1321-RWR130-DP		20DE099	100	1321-RWR100-EP
	20DD140	100	1321-RWR160-DP		20DE125	125	1321-RWR130-EP
	20DD156	125	1321-RWR160-DP		20DE144	150	1321-RWR160-EP
	20DD180	150	1321-RWR200-DP		20DE170	150	1321-RWR200-EP
	20DD248	200	1321-RWR250-DP		20DE208	200	1321-RWR250-EP
	20DD261	200	1321-RWR320-DP				
	20DD300	250	1321-RWR320-DP				

Isolation Transformers

For installations that have specific types of AC supply configurations or require drive protection due to AC line disturbances, isolation transformers are available.

Drive Motor Rating kW (HP)	240V, 60 Hz, Three-phase, 240V Primary and 240V Secondary	460V, 60 Hz, Three-phase, 460V Primary and 460V Secondary	575V, 60 Hz, Three-phase, 575V Primary and 575V Secondary
	IP32 (NEMA Type 3R)	IP32 (NEMA Type 3R)	IP32 (NEMA Type 3R)
	Cat. No.	Cat. No.	Cat. No.
0.25 (0.33	–	1321-3TW005-BB	–
0.37 (0.5)	–	1321-3TW005-BB	–
0.55 (0.75)	–	1321-3TW005-BB	–
0.75 (1.0)	–	1321-3TW005-BB	1321-3TW005-CC
1.1 (1.5)	–	1321-3TW005-BB	–
1.5 (2.0)	–	1321-3TW005-BB	1321-3TW005-CC
2.2 (3.0)	–	1321-3TW005-BB	1321-3TW005-CC
4.0 (5.0)	1321-3TW007-AA	1321-3TW007-BB	1321-3TW007-CC
5.5 (7.5)	1321-3TW011-AA	1321-3TW011-BB	1321-3TW011-CC
7.5 (10)	1321-3TW014-AA	1321-3TW014-BB	1321-3TW014-CC
11 (15)	1321-3TW020-AA	1321-3TW020-BB	1321-3TW020-CC
15 (20)	1321-3TW027-AA	1321-3TW027-BB	1321-3TW027-CC
18.5 (25)	1321-3TW034-AA	1321-3TW034-BB	1321-3TW034-CC
22 (30)	1321-3TW040-AA	1321-3TW040-BB	1321-3TW040-CC
30 (40)	1321-3TW051-AA	1321-3TW051-BB	1321-3TW051-CC
37 (50)	1321-3TH063-AA	1321-3TH063-BB	1321-3TH063-CC
45 (60)	1321-3TH075-AA	1321-3TH075-BB	1321-3TH075-CC
55 (75)	1321-3TH093-AA	1321-3TH093-BB	1321-3TH093-CC
75 (100)	–	1321-3TH118-BB	1321-3TH118-CC
90 (125)	–	1321-3TH145-BB	1321-3TH145-CC
110 (150)	–	1321-3TH175-BB	1321-3TH175-CC
149 (200)	–	1321-3TH220-BB	–

Input/Output Line Reactors

For impedance matching, protection from AC line disturbances or motor protection, reactors are available for both the input and output sides of the drive.

240V, 60 Hz, Three-phase, 3% Impedance

Drive Cat. No.	Duty	HP	Input Line Reactor (1)		Output Line Reactor (1)	
			IP00 (Open Style)	IP11 (NEMA Type 1)	IP00 (Open Style)	IP11 (NEMA Type 1)
			Cat. No.	Cat. No.	Cat. No.	Cat. No.
20DB2P2	Heavy Duty	0.33	1321-3R2-D	1321-3RA2-D	1321-3R2-D	1321-3RA2-D
20DB2P2	Normal Duty	0.5	1321-3R2-D	1321-3RA2-D	1321-3R2-D	1321-3RA2-D
20DB4P2	Heavy Duty	0.75	1321-3R4-A	1321-3RA4-A	1321-3R4-A	1321-3RA4-A
20DB4P2	Normal Duty	1	1321-3R4-A	1321-3RA4-A	1321-3R4-A	1321-3RA4-A
20DB6P8	Heavy Duty	1.5	1321-3R8-B	1321-3RA8-B	1321-3R8-A	1321-3RA8-A
20DB6P8	Normal Duty	2	1321-3R8-A	1321-3RA8-A	1321-3R8-A	1321-3RA8-A
20DB9P6	Heavy Duty	2	1321-3R8-A	1321-3RA8-A	1321-3R12-A	1321-3RA12-A
20DB9P6	Normal Duty	3	1321-3R12-A	1321-3RA12-A	1321-3R12-A	1321-3RA12-A
20DB015	Heavy Duty	3	1321-3R12-A	1321-3RA12-A	1321-3R18-A	1321-3RA18-A
20DB015	Normal Duty	5	1321-3R18-A	1321-3RA18-A	1321-3R18-A	1321-3RA18-A
20DB022	Heavy Duty	5	1321-3R18-A	1321-3RA18-A	1321-3R25-A	1321-3RA25-A

240V, 60 Hz, Three-phase, 3% Impedance (continued)

Drive Cat. No.	Duty	HP	Input Line Reactor (1)		Output Line Reactor (1)	
			IP00 (Open Style)	IP11 (NEMA Type 1)	IP00 (Open Style)	IP11 (NEMA Type 1)
			Cat. No.	Cat. No.	Cat. No.	Cat. No.
20DB022	Normal Duty	7.5	1321-3R25-A	1321-3RA25-A	1321-3R25-A	1321-3RA25-A
20DB028	Heavy Duty	7.5	1321-3R25-A	1321-3RA25-A	1321-3R35-A	1321-3RA35-A
20DB028	Normal Duty	10	1321-3R35-A	1321-3RA35-A	1321-3R35-A	1321-3RA35-A
20DB042	Heavy Duty	10	1321-3R35-A	1321-3RA35-A	1321-3R45-A	1321-3RA45-A
20DB042	Normal Duty	15	1321-3R45-A	1321-3RA45-A	1321-3R45-A	1321-3RA45-A
20DB052	Heavy Duty	15	1321-3R45-A	1321-3RA45-A	1321-3R55-A	1321-3RA55-A
20DB052	Normal Duty	20	1321-3R55-A	1321-3RA55-A	1321-3R55-A	1321-3RA55-A
20DB070	Heavy Duty	20	1321-3R55-A	1321-3RA55-A	1321-3R80-A	1321-3RA80-A
20DB070	Normal Duty	25	1321-3R80-A	1321-3RA80-A	1321-3R80-A	1321-3RA80-A
20DB080	Heavy Duty	25	1321-3R80-A	1321-3RA80-A	1321-3R80-A	1321-3RA80-A
20DB080	Normal Duty	30	1321-3R80-A	1321-3RA80-A	1321-3R80-A	1321-3RA80-A
20DB104	Heavy Duty	30	1321-3R80-A	1321-3RA80-A	1321-3R80-A	1321-3RA80-A
20DB104	Normal Duty	40	1321-3R100-A	1321-3RA100-A	1321-3R100-A	1321-3RA100-A
20DB130	Heavy Duty	40	1321-3R100-A	1321-3RA100-A	1321-3R100-A	1321-3RA100-A
20DB130	Normal Duty	50	1321-3R130-A	1321-3RA130-A	1321-3R130-A	1321-3RA130-A
20DB154	Heavy Duty	50	1321-3R130-A	1321-3RA130-A	1321-3R130-A	1321-3RA130-A
20DB154	Normal Duty	60	1321-3R160-A	1321-3RA160-A	1321-3R160-A	1321-3RA160-A
20DB192	Heavy Duty	60	1321-3R160-A	1321-3RA160-A	1321-3R160-A	1321-3RA160-A
20DB192	Normal Duty	75	1321-3R200-A	1321-3RA200-A	1321-3R200-A	1321-3RA200-A
20DB260	Heavy Duty	75	1321-3R200-A	1321-3RA200-A	1321-3R200-A	1321-3RA200-A
20DB260	Normal Duty	100	1321-3RB250-A	1321-3RAB250-A	1321-3RB250-A	1321-3RAB250-A

(1) Input line reactors were sized based on the NEC fundamental motor amps. Output line reactors were sized based on the VFD rated output currents.

240V, 60 Hz, Three-phase, 5% Impedance

Drive Cat. No.	Duty	HP	Input Line Reactor (1)		Output Line Reactor (1)	
			IP00 (Open Style)	IP11 (NEMA Type 1)	IP00 (Open Style)	IP11 (NEMA Type 1)
			Cat. No.	Cat. No.	Cat. No.	Cat. No.
20DB2P2	Heavy Duty	0.33	1321-3R2-A	1321-3RA2-A	1321-3R2-A	1321-3RA2-A
20DB2P2	Normal Duty	0.5	1321-3R2-A	1321-3RA2-A	1321-3R2-A	1321-3RA2-A
20DB4P2	Heavy Duty	0.75	1321-3R4-B	1321-3RA4-B	1321-3R4-B	1321-3RA4-B
20DB4P2	Normal Duty	1	1321-3R4-B	1321-3RA4-B	1321-3R4-B	1321-3RA4-B
20DB6P8	Heavy Duty	1.5	1321-3R8-B	1321-3RA8-B	1321-3R8-B	1321-3RA8-B
20DB6P8	Normal Duty	2	1321-3R8-B	1321-3RA8-B	1321-3R8-B	1321-3RA8-B
20DB9P6	Heavy Duty	2	1321-3R8-B	1321-3RA8-B	1321-3R12-B	1321-3RA12-B
20DB9P6	Normal Duty	3	1321-3R12-B	1321-3RA12-B	1321-3R12-B	1321-3RA12-B
20DB015	Heavy Duty	3	1321-3R12-B	1321-3RA12-B	1321-3R18-B	1321-3RA18-B
20DB015	Normal Duty	5	1321-3R18-B	1321-3RA18-B	1321-3R18-B	1321-3RA18-B
20DB022	Heavy Duty	5	1321-3R18-B	1321-3RA18-B	1321-3R25-B	1321-3RA25-B
20DB022	Normal Duty	7.5	1321-3R25-B	1321-3RA25-B	1321-3R25-B	1321-3RA25-B
20DB028	Heavy Duty	7.5	1321-3R25-B	1321-3RA25-B	1321-3R35-B	1321-3RA35-B
20DB028	Normal Duty	10	1321-3R35-B	1321-3RA35-B	1321-3R35-B	1321-3RA35-B
20DB042	Heavy Duty	10	1321-3R35-B	1321-3RA35-B	1321-3R45-B	1321-3RA45-B
20DB042	Normal Duty	15	1321-3R45-B	1321-3RA45-B	1321-3R45-B	1321-3RA45-B
20DB052	Heavy Duty	15	1321-3R45-B	1321-3RA45-B	1321-3R55-B	1321-3RA55-B
20DB052	Normal Duty	20	1321-3R55-B	1321-3RA55-B	1321-3R55-B	1321-3RA55-B
20DB070	Heavy Duty	20	1321-3R55-B	1321-3RA55-B	1321-3R80-B	1321-3RA80-B
20DB070	Normal Duty	25	1321-3R80-B	1321-3RA80-B	1321-3R80-B	1321-3RA80-B
20DB080	Heavy Duty	25	1321-3R80-B	1321-3RA80-B	1321-3R80-B	1321-3RA80-B
20DB080	Normal Duty	30	1321-3R80-B	1321-3RA80-B	1321-3R80-B	1321-3RA80-B
20DB104	Heavy Duty	30	1321-3R80-B	1321-3RA80-B	1321-3R80-B	1321-3RA80-B
20DB104	Normal Duty	40	1321-3R100-B	1321-3RA100-B	1321-3R100-B	1321-3RA100-B
20DB130	Heavy Duty	40	1321-3R100-B	1321-3RA100-B	1321-3R100-B	1321-3RA100-B
20DB130	Normal Duty	50	1321-3R130-B	1321-3RA130-B	1321-3R130-B	1321-3RA130-B
20DB154	Heavy Duty	50	1321-3R130-B	1321-3RA130-B	1321-3R130-B	1321-3RA130-B
20DB154	Normal Duty	60	1321-3R160-B	1321-3RA160-B	1321-3R160-B	1321-3RA160-B
20DB192	Heavy Duty	60	1321-3R160-B	1321-3RA160-B	1321-3R160-B	1321-3RA160-B
20DB192	Normal Duty	75	1321-3R200-B	1321-3RA200-B	1321-3R200-B	1321-3RA200-B
20DB260	Heavy Duty	75	1321-3R200-B	1321-3RA200-B	1321-3R200-B	1321-3RA200-B
20DB260	Normal Duty	100	1321-3RB250-B	1321-3RAB250-B	1321-3RB250-B	1321-3RAB250-B

(1) Input line reactors were sized based on the NEC fundamental motor amps. Output line reactors were sized based on the VFD rated output currents.

480V, 60 Hz, Three-phase, 3% Impedance

Drive Cat. No.	Duty	HP	Input Line Reactor (1)		Output Line Reactor (1)	
			IP00 (Open Style)	IP11 (NEMA Type 1)	IP00 (Open Style)	IP11 (NEMA Type 1)
			Cat. No.	Cat. No.	Cat. No.	Cat. No.
20DD1P1	Heavy Duty	0.33	1321-3R1-C	1321-3RA1-C	1321-3R2-B	1321-3RA2-B
20DD1P1	Normal Duty	0.5	1321-3R1-C	1321-3RA1-C	1321-3R2-B	1321-3RA2-B
20DD2P1	Heavy Duty	0.75	1321-3R2-A	1321-3RA2-A	1321-3R2-A	1321-3RA2-A
20DD2P1	Normal Duty	1	1321-3R2-A	1321-3RA2-A	1321-3R2-A	1321-3RA2-A
20DD3P4	Heavy Duty	1.5	1321-3R4-C	1321-3RA4-C	1321-3R4-B	1321-3RA4-B
20DD3P4	Normal Duty	2	1321-3R4-B	1321-3RA4-B	1321-3R4-B	1321-3RA4-B
20DD5P0	Heavy Duty	2	1321-3R4-B	1321-3RA4-B	1321-3R8-C	1321-3RA8-C
20DD5P0	Normal Duty	3	1321-3R8-C	1321-3RA8-C	1321-3R8-C	1321-3RA8-C
20DD8P0	Heavy Duty	3	1321-3R8-C	1321-3RA8-C	1321-3R8-B	1321-3RA8-B
20DD8P0	Normal Duty	5	1321-3R8-B	1321-3RA8-B	1321-3R8-B	1321-3RA8-B
20DD011	Heavy Duty	5	1321-3R8-B	1321-3RA8-B	1321-3R12-B	1321-3RA12-B
20DD011	Normal Duty	7.5	1321-3R12-B	1321-3RA12-B	1321-3R12-B	1321-3RA12-B
20DD014	Heavy Duty	7.5	1321-3R12-B	1321-3RA12-B	1321-3R18-B	1321-3RA18-B
20DD014	Normal Duty	10	1321-3R18-B	1321-3RA18-B	1321-3R18-B	1321-3RA18-B
20DD022	Heavy Duty	10	1321-3R18-B	1321-3RA18-B	1321-3R25-B	1321-3RA25-B
20DD022	Normal Duty	15	1321-3R25-B	1321-3RA25-B	1321-3R25-B	1321-3RA25-B
20DD027	Heavy Duty	15	1321-3R25-B	1321-3RA25-B	1321-3R25-B	1321-3RA25-B
20DD027	Normal Duty	20	1321-3R35-B	1321-3RA35-B	1321-3R25-B	1321-3RA25-B
20DD034	Heavy Duty	20	1321-3R35-B	1321-3RA35-B	1321-3R35-B	1321-3RA35-B
20DD034	Normal Duty	25	1321-3R35-B	1321-3RA35-B	1321-3R35-B	1321-3RA35-B
20DD040	Heavy Duty	25	1321-3R35-B	1321-3RA35-B	1321-3R45-B	1321-3RA45-B
20DD040	Normal Duty	30	1321-3R45-B	1321-3RA45-B	1321-3R45-B	1321-3RA45-B
20DD052	Heavy Duty	30	1321-3R45-B	1321-3RA45-B	1321-3R55-B	1321-3RA55-B
20DD052	Normal Duty	40	1321-3R55-B	1321-3RA55-B	1321-3R55-B	1321-3RA55-B
20DD065	Heavy Duty	40	1321-3R55-B	1321-3RA55-B	1321-3R80-B	1321-3RA80-B
20DD065	Normal Duty	50	1321-3R80-B	1321-3RA80-B	1321-3R80-B	1321-3RA80-B
20DD077	Heavy Duty	50	1321-3R80-B	1321-3RA80-B	1321-3R80-B	1321-3RA80-B
20DD077	Normal Duty	60	1321-3R80-B	1321-3RA80-B	1321-3R80-B	1321-3RA80-B
20DD096	Heavy Duty	60	1321-3R80-B	1321-3RA80-B	1321-3R80-B	1321-3RA80-B
20DD096	Normal Duty	75	1321-3R100-B	1321-3RA100-B	1321-3R100-B	1321-3RA100-B
20DD125	Heavy Duty	75	1321-3R100-B	1321-3RA100-B	1321-3R100-B	1321-3RA100-B
20DD125	Normal Duty	100	1321-3R130-B	1321-3RA130-B	1321-3R130-B	1321-3RA130-B
20DD140	Heavy Duty	75	1321-3R100-B	1321-3RA100-B	1321-3R100-B	1321-3RA100-B
20DD140	Normal Duty	100	1321-3R130-B	1321-3RA130-B	1321-3R130-B	1321-3RA130-B
20DD156	Heavy Duty	100	1321-3R130-B	1321-3RA130-B	1321-3R130-B	1321-3RA130-B
20DD156	Normal Duty	125	1321-3R160-B	1321-3RA160-B	1321-3R160-B	1321-3RA160-B
20DD180	Heavy Duty	125	1321-3R160-B	1321-3RA160-B	1321-3R160-B	1321-3RA160-B
20DD180	Normal Duty	150	1321-3R200-B	1321-3RA200-B	1321-3R200-C	1321-3RA200-C
20DD248	Heavy Duty	150	1321-3R200-B	1321-3RA200-B	1321-3R200-C	1321-3RA200-C
20DD248	Normal Duty	200	1321-3RB250-B	1321-3RAB250-B	1321-3RB250-B	1321-3RAB250-B
20DD261	Heavy Duty	150	1321-3R200-B	1321-3RA200-B	1321-3R200-B	1321-3RA200-B
20DD261	Normal Duty	200	1321-3RB250-B	1321-3RAB250-B	1321-3RB250-B	1321-3RAB250-B
20DD300	Heavy Duty	200	1321-3RB250-B	1321-3RAB250-B	1321-3RB250-B	1321-3RAB250-B

(1) Input line reactors were sized based on the NEC fundamental motor amps. Output line reactors were sized based on the VFD rated output currents.

480V, 60 Hz, Three-phase, 5% Impedance

Drive Cat. No.	Duty	HP	Input Line Reactor (1)		Output Line Reactor (1)	
			IP00 (Open Style)	IP11 (NEMA Type 1)	IP00 (Open Style)	IP11 (NEMA Type 1)
			Cat. No.	Cat. No.	Cat. No.	Cat. No.
20DD1P1	Heavy Duty	0.33	1321-3R1-B	1321-3RA1-B	1321-3R2-C	1321-3RA2-C
20DD1P1	Normal Duty	0.5	1321-3R1-B	1321-3RA1-B	1321-3R2-C	1321-3RA2-C
20DD2P1	Heavy Duty	0.75	1321-3R2-C	1321-3RA2-C	1321-3R2-B	1321-3RA2-B
20DD2P1	Normal Duty	1	1321-3R2-B	1321-3RA2-B	1321-3R2-B	1321-3RA2-B
20DD3P4	Heavy Duty	1.5	1321-3R4-D	1321-3RA4-D	1321-3R4-D	1321-3RA4-D
20DD3P4	Normal Duty	2	1321-3R4-D	1321-3RA4-D	1321-3R4-D	1321-3RA4-D
20DD5P0	Heavy Duty	2	1321-3R4-D	1321-3RA4-D	1321-3R8-D	1321-3RA8-D
20DD5P0	Normal Duty	3	1321-3R8-D	1321-3RA8-D	1321-3R8-D	1321-3RA8-D
20DD8P0	Heavy Duty	3	1321-3R8-D	1321-3RA8-D	1321-3R8-C	1321-3RA8-C
20DD8P0	Normal Duty	5	1321-3R8-C	1321-3RA8-C	1321-3R8-C	1321-3RA8-C
20DD011	Heavy Duty	5	1321-3R8-C	1321-3RA8-C	1321-3R12-C	1321-3RA12-C
20DD011	Normal Duty	7.5	1321-3R12-C	1321-3RA12-C	1321-3R12-C	1321-3RA12-C
20DD014	Heavy Duty	7.5	1321-3R12-C	1321-3RA12-C	1321-3R18-C	1321-3RA18-C
20DD014	Normal Duty	10	1321-3R18-C	1321-3RA18-C	1321-3R18-C	1321-3RA18-C
20DD022	Heavy Duty	10	1321-3R18-C	1321-3RA18-C	1321-3R25-C	1321-3RA25-C
20DD022	Normal Duty	15	1321-3R25-C	1321-3RA25-C	1321-3R25-C	1321-3RA25-C
20DD027	Heavy Duty	15	1321-3R25-C	1321-3RA25-C	1321-3R25-C	1321-3RA25-C
20DD027	Normal Duty	20	1321-3R35-C (2)	1321-3RA35-C (2)	1321-3R25-C	1321-3RA25-C
20DD034	Heavy Duty	20	1321-3R35-C (2)	1321-3RA35-C (2)	1321-3R35-C	1321-3RA35-C
20DD034	Normal Duty	25	1321-3R35-C	1321-3RA35-C	1321-3R35-C	1321-3RA35-C
20DD040	Heavy Duty	25	1321-3R35-C	1321-3RA35-C	1321-3R45-C	1321-3RA45-C
20DD040	Normal Duty	30	1321-3R45-C	1321-3RA45-C	1321-3R45-C	1321-3RA45-C
20DD052	Heavy Duty	30	1321-3R45-C	1321-3RA45-C	1321-3R55-C	1321-3RA55-C
20DD052	Normal Duty	40	1321-3R55-C	1321-3RA55-C	1321-3R55-C	1321-3RA55-C
20DD065	Heavy Duty	40	1321-3R55-C	1321-3RA55-C	1321-3R80-C	1321-3RA80-C
20DD065	Normal Duty	50	1321-3R80-C	1321-3RA80-C	1321-3R80-C	1321-3RA80-C
20DD077	Heavy Duty	50	1321-3R80-C	1321-3RA80-C	1321-3R80-C	1321-3RA80-C
20DD077	Normal Duty	60	1321-3R80-C	1321-3RA80-C	1321-3R80-C	1321-3RA80-C
20DD096	Heavy Duty	60	1321-3R80-C	1321-3RA80-C	1321-3R80-C	1321-3RA80-C
20DD096	Normal Duty	75	1321-3R100-C	1321-3RA100-C	1321-3R100-C	1321-3RA100-C
20DD125	Heavy Duty	75	1321-3R100-C	1321-3RA100-C	1321-3R100-C	1321-3RA100-C
20DD125	Normal Duty	100	1321-3R130-C	1321-3RA130-C	1321-3R130-C	1321-3RA130-C
20DD140	Heavy Duty	75	1321-3R100-C	1321-3RA100-C	1321-3R100-C	1321-3RA100-C
20DD140	Normal Duty	100	1321-3R130-C	1321-3RA130-C	1321-3R130-C	1321-3RA130-C
20DD156	Heavy Duty	100	1321-3R130-C	1321-3RA130-C	1321-3R130-C	1321-3RA130-C
20DD156	Normal Duty	125	1321-3R160-C	1321-3RA160-C	1321-3R160-C	1321-3RA160-C
20DD180	Heavy Duty	125	1321-3R160-C	1321-3RA160-C	1321-3R160-C	1321-3RA160-C
20DD180	Normal Duty	150	1321-3R200-C	1321-3RA200-C	1321-3R200-C (2)	1321-3RA200-C (2)
20DD248	Heavy Duty	150	1321-3R200-C	1321-3RA200-C	1321-3R200-C (2)	1321-3RA200-C (2)
20DD248	Normal Duty	200	1321-3RB250-C	1321-3RAB250-C	1321-3RB250-C	1321-3RAB250-C
20DD261	Heavy Duty	200	1321-3R200-C	1321-3RA200-C	1321-3R200-C	1321-3RA200-C
20DD261	Normal Duty	200	1321-3RB250-C	1321-3RAB250-C	1321-3RB250-C	1321-3RAB250-C
20DD300	Heavy Duty	150	1321-3RB250-C	1321-3RAB250-C	1321-3RB250-C	1321-3RAB250-C

(1) Input line reactors were sized based on the NEC fundamental motor amps. Output line reactors were sized based on the VFD rated output currents.
(2) 4% impedance.

600V, 60 Hz, Three-phase, 3% Impedance

Drive Cat. No.	Duty	HP	Input Line Reactor (1)		Output Line Reactor (1)	
			IP00 (Open Style)	IP11 (NEMA Type 1)	IP00 (Open Style)	IP11 (NEMA Type 1)
			Cat. No.	Cat. No.	Cat. No.	Cat. No.
20DE1P7	Heavy Duty	0.5	1321-3R1-C	1321-3RA1-C	1321-3R2-B	1321-3RA2-B
20DE1P7	Normal Duty	1	1321-3R2-B	1321-3RA2-B	1321-3R2-B	1321-3RA2-B
20DE2P7	Heavy Duty	1	1321-3R2-B	1321-3RA2-B	1321-3R4-D	1321-3RA4-D
20DE2P7	Normal Duty	2	1321-3R4-D	1321-3RA4-D	1321-3R4-D	1321-3RA4-D
20DE3P9	Heavy Duty	2	1321-3R4-D	1321-3RA4-D	1321-3R4-C	1321-3RA4-C
20DE3P9	Normal Duty	3	1321-3R4-C	1321-3RA4-C	1321-3R4-C	1321-3RA4-C
20DE6P1	Heavy Duty	3	1321-3R4-C	1321-3RA4-C	1321-3R8-C	1321-3RA8-C
20DE6P1	Normal Duty	5	1321-3R8-C	1321-3RA8-C	1321-3R8-C	1321-3RA8-C
20DE9P0	Heavy Duty	5	1321-3R8-C	1321-3RA8-C	1321-3R12-C	1321-3RA12-C
20DE9P0	Normal Duty	7.5	1321-3R12-C	1321-3RA12-C	1321-3R12-C	1321-3RA12-C
20DE011	Heavy Duty	7.5	1321-3R12-C	1321-3RA12-C	1321-3R12-B	1321-3RA12-B
20DE011	Normal Duty	10	1321-3R12-B	1321-3RA12-B	1321-3R12-B	1321-3RA12-B
20DE017	Heavy Duty	10	1321-3R12-B	1321-3RA12-B	1321-3R18-B	1321-3RA18-B
20DE017	Normal Duty	15	1321-3R18-B	1321-3RA18-B	1321-3R18-B	1321-3RA18-B
20DE022	Heavy Duty	15	1321-3R18-B	1321-3RA18-B	1321-3R25-B	1321-3RA25-B
20DE022	Normal Duty	20	1321-3R25-B	1321-3RA25-B	1321-3R25-B	1321-3RA25-B
20DE027	Heavy Duty	20	1321-3R25-B	1321-3RA25-B	1321-3R35-C	1321-3RA35-C
20DE027	Normal Duty	25	1321-3R35-C	1321-3RA35-C	1321-3R35-C	1321-3RA35-C
20DE032	Heavy Duty	25	1321-3R35-C	1321-3RA35-C	1321-3R35-B	1321-3RA35-B
20DE032	Normal Duty	30	1321-3R35-B	1321-3RA35-B	1321-3R35-B	1321-3RA35-B
20DE041	Heavy Duty	30	1321-3R35-B	1321-3RA35-B	1321-3R45-B	1321-3RA45-B
20DE041	Normal Duty	40	1321-3R45-B	1321-3RA45-B	1321-3R45-B	1321-3RA45-B
20DE052	Heavy Duty	40	1321-3R45-B	1321-3RA45-B	1321-3R55-B	1321-3RA55-B
20DE052	Normal Duty	50	1321-3R55-B	1321-3RA55-B	1321-3R55-B	1321-3RA55-B
20DE062	Heavy Duty	50	1321-3R55-B	1321-3RA55-B	1321-3R80-B	1321-3RA80-B
20DE062	Normal Duty	60	1321-3R80-B	1321-3RA80-B	1321-3R80-B	1321-3RA80-B
20DE077	Heavy Duty	60	1321-3R80-B	1321-3RA80-B	1321-3R80-B	1321-3RA80-B
20DE077	Normal Duty	75	1321-3R80-B	1321-3RA80-B	1321-3R80-B	1321-3RA80-B
20DE099	Heavy Duty	75	1321-3R80-B	1321-3RA80-B	1321-3R80-B	1321-3RA80-B
20DE099	Normal Duty	100	1321-3R100-B	1321-3RA100-B	1321-3R100-B	1321-3RA100-B
20DE125	Heavy Duty	100	1321-3R100-B	1321-3RA100-B	1321-3R100-B	1321-3RA100-B
20DE125	Normal Duty	125	1321-3R130-B	1321-3RA130-B	1321-3R130-B	1321-3RA130-B
20DE144	Heavy Duty	125	1321-3R130-B	1321-3RA130-B	1321-3R130-B	1321-3RA130-B
20DE144	Normal Duty	150	1321-3R160-B	1321-3RA160-B	1321-3R160-B	1321-3RA160-B

(1) Input line reactors were sized based on the NEC fundamental motor amps. Output line reactors were sized based on the VFD rated output currents.

600V, 60 Hz, Three-phase, 5% Impedance

Drive Cat. No.	Duty	HP	Input Line Reactor (1)		Output Line Reactor (1)	
			IP00 (Open Style)	IP11 (NEMA Type 1)	IP00 (Open Style)	IP11 (NEMA Type 1)
			Cat. No.	Cat. No.	Cat. No.	Cat. No.
20DE1P7	Heavy Duty	0.5	1321-3R1-B	1321-3RA1-B	1321-3R2-C	1321-3RA2-C
20DE1P7	Normal Duty	1	1321-3R2-C	1321-3RA2-C	1321-3R2-C	1321-3RA2-C
20DE2P7	Heavy Duty	1	1321-3R2-C	1321-3RA2-C	1321-3R4-D (2)	1321-3RA4-D (2)
20DE2P7	Normal Duty	2	1321-3R4-D (2)	1321-3RA4-D (2)	1321-3R4-D (2)	1321-3RA4-D (2)
20DE3P9	Heavy Duty	2	1321-3R4-D (2)	1321-3RA4-D (2)	1321-3R4-D	1321-3RA4-D
20DE3P9	Normal Duty	3	1321-3R4-D	1321-3RA4-D	1321-3R4-D	1321-3RA4-D
20DE6P1	Heavy Duty	3	1321-3R4-D	1321-3RA4-D	1321-3R8-D	1321-3RA8-D
20DE6P1	Normal Duty	5	1321-3R8-D	1321-3RA8-D	1321-3R8-D	1321-3RA8-D
20DE9P0	Heavy Duty	5	1321-3R8-D	1321-3RA8-D	1321-3R12-C (2)	1321-3RA12-C (2)
20DE9P0	Normal Duty	7.5	1321-3R12-C (2)	1321-3RA12-C (2)	1321-3R12-C (2)	1321-3RA12-C (2)
20DE011	Heavy Duty	7.5	1321-3R12-C (2)	1321-3RA12-C (2)	1321-3R12-C	1321-3RA12-C
20DE011	Normal Duty	10	1321-3R12-C	1321-3RA12-C	1321-3R12-C	1321-3RA12-C
20DE017	Heavy Duty	10	1321-3R12-C	1321-3RA12-C	1321-3R18-C	1321-3RA18-C
20DE017	Normal Duty	15	1321-3R18-C	1321-3RA18-C	1321-3R18-C	1321-3RA18-C
20DE022	Heavy Duty	15	1321-3R18-C	1321-3RA18-C	1321-3R25-C (2)	1321-3RA25-C (2)
20DE022	Normal Duty	20	1321-3R25-C (2)	1321-3RA25-C (2)	1321-3R25-C (2)	1321-3RA25-C (2)
20DE027	Heavy Duty	20	1321-3R25-C (2)	1321-3RA25-C (2)	1321-3R35-C (2)	1321-3RA35-C (2)
20DE027	Normal Duty	25	1321-3R35-C (2)	1321-3RA35-C (2)	1321-3R35-C (2)	1321-3RA35-C (2)
20DE032	Heavy Duty	25	1321-3R35-C (2)	1321-3RA35-C (2)	1321-3R35-C (2)	1321-3RA35-C (2)
20DE032	Normal Duty	30	1321-3R35-C (2)	1321-3RA35-C (2)	1321-3R35-C (2)	1321-3RA35-C (2)
20DE041	Heavy Duty	30	1321-3R35-C (2)	1321-3RA35-C (2)	1321-3R45-C	1321-3RA45-C
20DE041	Normal Duty	40	1321-3R45-C	1321-3RA45-C	1321-3R45-C	1321-3RA45-C
20DE052	Heavy Duty	40	1321-3R45-C	1321-3RA45-C	1321-3R55-C	1321-3RA55-C
20DE052	Normal Duty	50	1321-3R55-C	1321-3RA55-C	1321-3R55-C	1321-3RA55-C
20DE062	Heavy Duty	50	1321-3R55-C	1321-3RA55-C	1321-3R80-C	1321-3RA80-C
20DE062	Normal Duty	60	1321-3R80-C	1321-3RA80-C	1321-3R80-C	1321-3RA80-C
20DE077	Heavy Duty	60	1321-3R80-C	1321-3RA80-C	1321-3R80-C	1321-3RA80-C
20DE077	Normal Duty	75	1321-3R80-C	1321-3RA80-C	1321-3R80-C	1321-3RA80-C
20DE099	Heavy Duty	75	1321-3R80-C	1321-3RA80-C	1321-3R80-C	1321-3RA80-C
20DE099	Normal Duty	100	1321-3R100-C	1321-3RA100-C	1321-3R100-C	1321-3RA100-C
20DE125	Heavy Duty	100	1321-3R100-C	1321-3RA100-C	1321-3R100-C	1321-3RA100-C
20DE125	Normal Duty	125	1321-3R130-C (2)	1321-3RA130-C (2)	1321-3R130-C (2)	1321-3RA130-C (2)
20DE144	Heavy Duty	125	1321-3R130-C (2)	1321-3RA130-C (2)	1321-3R130-C (2)	1321-3RA130-C (2)
20DE144	Normal Duty	150	1321-3R160-C (2)	1321-3RA160-C (2)	1321-3R160-C (2)	1321-3RA160-C (2)

(1) Input line reactors were sized based on the NEC fundamental motor amps. Output line reactors were sized based on the VFD rated output currents.
(2) 4% impedance.

Installation Considerations

Power Wiring

By providing built in input MOVs (line to line and line to ground) for robust transient protection, ground fault and short circuit protection, electronic motor overload, built in noise filtering, patented reflected wave reduction software, and others, the PowerFlex 700S design addresses many of the concerns in a typical installation.

Peak Voltage Protection for Motors with Lower Insulation Systems

While the PowerFlex 700S Phase II drive contains the very best in reflected wave reduction techniques, some motors may have insulation systems with values well below the NEMA/UL standards. While these motors may perform to expectations, they must be protected from the reflected wave transients that all PWM drives produce. See publication DRIVES-IN001, Wiring and Grounding Guidelines for Pulse Width Modulated (PWM) AC Drives, for cable length recommendations and Page 21 for reflected wave reduction options.

Proper Grounding and Related Noise Reduction

The starting point for any solid drive installation is proper grounding techniques. Most commonly observed noise problems can be easily eliminated with quality installation practices. See publication DRIVES-IN001, Wiring and Grounding Guidelines for Pulse Width Modulated (PWM) AC Drives, for complete information.

The block diagram below also provides direction on other installation issues and concerns.

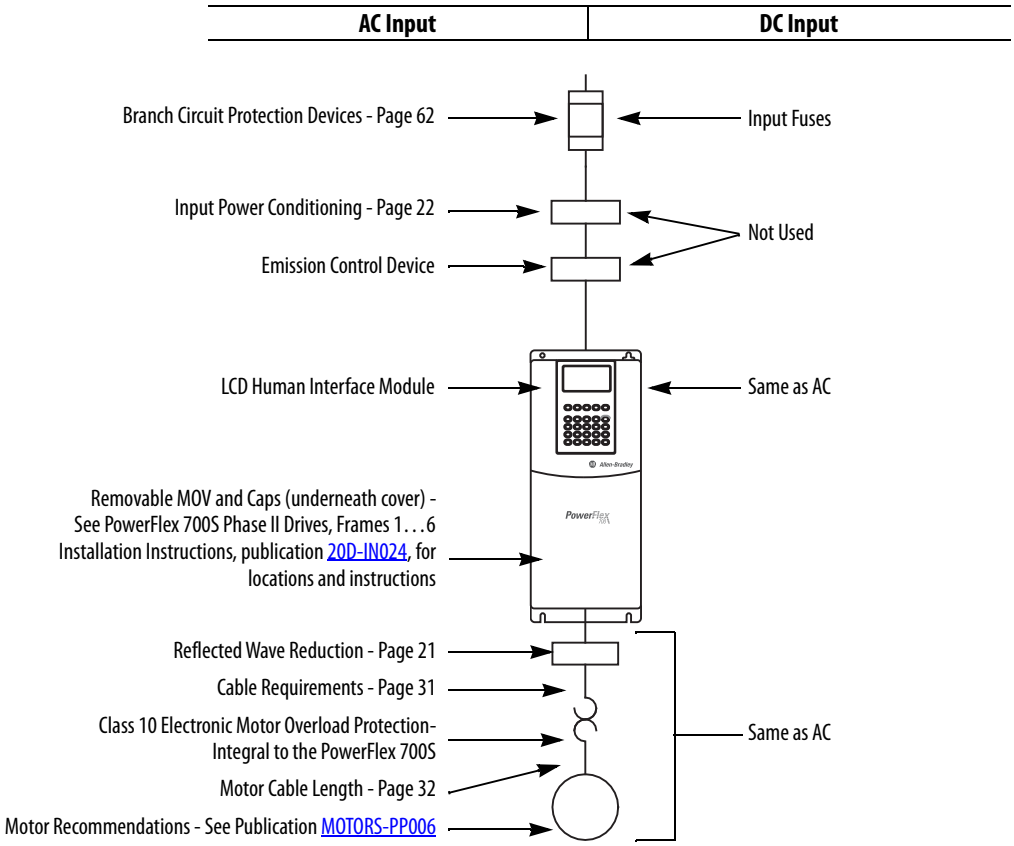

Single-phase Input Power

PowerFlex 700S drives are typically used with a six-pulse, three-phase input supply. However, single-phase operation is possible under certain conditions as explained below:

Frames	Condition
1…6	Not currently rated under the UL508C listing. Rockwell Automation has verified that single-phase operation with output current that is derated by 50% of the six-pulse, three-phase ratings that are listed in the tables beginning on page 50 will meet all safety requirements.
9…14	Listed by UL to operate on single-phase input power with the requirement that the output current is derated by 80% of the six-pulse, three-phase ratings listed in the tables beginning on page 50.

AC Input Phase Selection (Frames 5 and 6 Only)

Moving the "Line Type" jumper (shown in the illustration below) will select single or six-pulse, three-phase operation. Remove plastic guard to access jumper.

IMPORTANT When selecting single-phase operation, input power must be applied to the R (L1) and S (L2) terminals only.

Fan Voltage Selection (Frames 5 and 6 Only)

Frames 5 and 6 utilize a transformer (located behind the power terminal block) to match the input line voltage to the internal fan voltage. If your line voltage is different than the voltage class specified on the drive nameplate, it may be necessary to change the transformer taps.

Frames 5 & 6 Jumper and Transformer Locations

(Frame 5 shown)

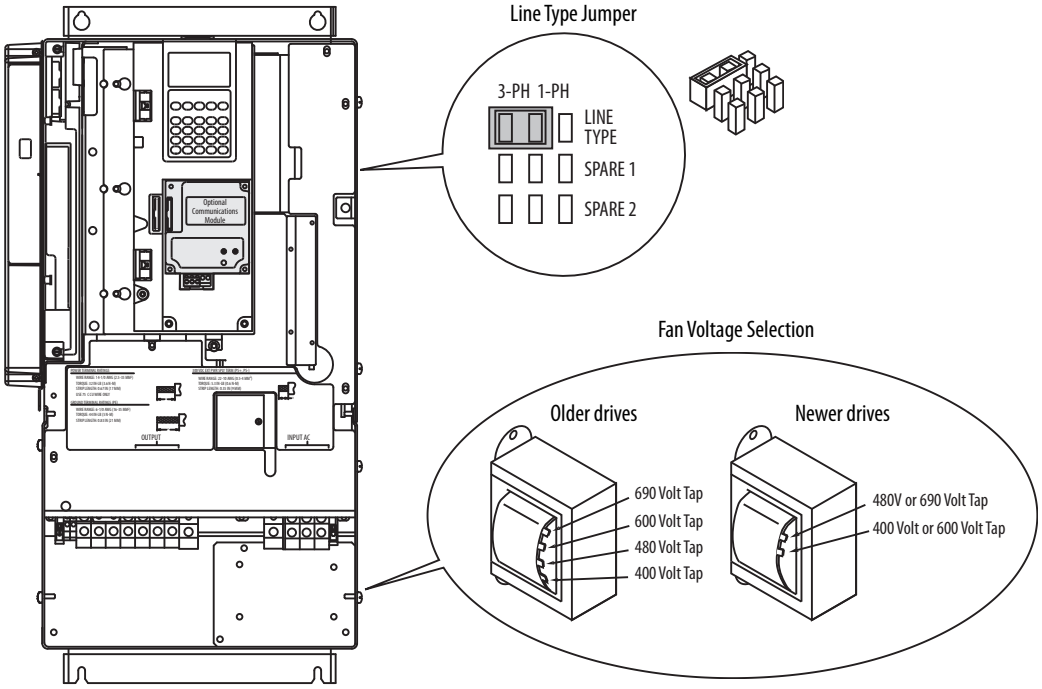

Cooling Fan Voltage for Common Bus Drives

Common Bus drives require user supplied 120V or 240V AC to power the cooling fans. The power source is connected between "0V AC" and the terminal corresponding to your source voltage (see Power Terminal Block Details, Frames 5 & 6 Terminal Block Locations on page 38 and Power Terminal Block Details on page 45).

Cable Types Acceptable for 200…600 Volt Installations

A variety of cable types are acceptable for drive installations. For many installations, unshielded cable is adequate, provided it can be separated from sensitive circuits. As an approximate guide, allow a spacing of 0.3 meters (1 foot) for every 10 meters (32.8 feet) of length. In all cases, long parallel runs must be avoided. Do not use cable with an insulation thickness less than or equal to 15 mils (0.4mm/0.015 in.). Use Copper wire only. Wire gauge requirements and recommendations are based on 75° C. Do not reduce wire gauge when using higher temperature wire. See table below.

Unshielded

THHN, THWN, or similar wire is acceptable for drive installation in dry environments provided adequate free air space and/or conduit fill rates limits are provided. **Do not use THHN or similarly coated wire in wet areas.** Any wire that is chosen must have a minimum insulation thickness of 15 Mils and should not have large variations in insulation concentricity.

Shielded/Armored Cable

Shielded cable contains all of the general benefits of multi-conductor cable with the added benefit of a copper braided shield that can contain much of the noise that is generated by a typical AC drive. Strong consideration for shielded cable should be given in installations with sensitive equipment such as weigh scales, capacitive proximity switches, and other devices that may be affected by electrical noise in the distribution system. Applications with large numbers of drives in a similar location, imposed EMC regulations or a high degree of communications/ networking are also good candidates for shielded cable.

Shielded cable may also help reduce shaft voltage and induced bearing currents for some applications. In addition, the increased impedance of shielded cable may help extend the distance that the motor can be located from the drive without the addition of motor protective devices such as terminator networks. See Reflected Wave in "Wiring and Grounding Guidelines for PWM AC Drives," publication DRIVES-IN001.

Consideration should be given to all of the general specifications that are dictated by the environment of the installation, including temperature, flexibility, moisture characteristics, and chemical resistance. In addition, a braided shield should be included and be specified by the cable manufacturer as having coverage of at least 75%. An additional foil shield can greatly improve noise containment.

A good example of recommended cable is Belden 295xx (xx determines gauge). This cable has four XLPE insulated conductors with a 100% coverage foil and an 85% coverage copper braided shield (with drain wire) surrounded by a PVC jacket.

Other types of shielded cable are available, but the selection of these types may limit the allowable cable length. Particularly, some of the newer cables twist 4 conductors of THHN wire and wrap them tightly with a foil shield. This construction can greatly increase the cable charging current required and reduce the overall drive performance. Unless specified in the individual distance tables as tested with the drive, these cables are not recommended and their performance against the lead length limits supplied is not known.

Location	Rating/Type	Description
Standard (Option 1)	600V, 90° C (194° F) XHHW2/RHW-2 Anixter B209500-B209507, Belden 29501-29507, or equivalent	• Four tinned copper conductors with XLPE insulation. • Copper braid/aluminum foil combination shield and tinned copper drain wire. • PVC jacket.
Standard (Option 2)	Tray rated 600V, 90° C (194° F) RHH/RHW-2 Anixter OLF-7xxxxx or equivalent	• Three tinned copper conductors with XLPE insulation. • 5 mil single helical copper tape (25% overlap Min) with three bare copper grounds in contact with shield. • PVC jacket.
Class I & II; Division I & II	Tray rated 600V, 90° C (194° F) RHH/RHW-2 Anixter 7V-7xxxx-3G or equivalent	• Three bare copper conductors with XLPE insulation and impervious corrugated continuously welded aluminum armor. • Black sunlight resistant PVC jacket overall. • Three copper grounds on #10 AWG and smaller.

Maximum Motor Cable Lengths

IMPORTANT In the following tables, A "●" in any of the latter columns will indicate that this drive rating can be used with an Allen-Bradley Terminator (1204-TFA1/1204-TFB2) and/or Reflected Wave Reduction Device with Common Mode Choke (1204-RWC-17) or without choke (1204-RWR2).

- For the Terminator, the maximum cable length is 182.9 meters (600 feet) for 400/480/600V drives (not 690V). The PWM frequency must be 2 kHz. The 1204-TFA1 can be used only on low HP (5 HP and below), while the 1204-TFB2 can be used from 2...800 HP.

- 1204 Reflected Wave Reduction Device (all motor insulation classes):

  - 1204-RWR2-09
    2 kHz: 182.9 m (600 ft.) at 400/480V and 121.9 m (400 ft.) at 600V.
    4 kHz: 91.4 m (300 ft.) at 400/480V and 61.0 m (200 ft.) at 600V.
  - 1204-RWC-17
    2 kHz: 365.8 m (1200 ft.) at 400/480/600V.
    4 kHz: 243.8 m (800 ft.) at 400/480V and 121.9 m (400 ft.) at 600V.

  For both devices, power dissipation in the damping resistor limits maximum cable length.

  The 1321-RWR is a complete reflected wave reduction solution available for many of the PowerFlex drives. If available, a 1321-RWR catalog number will be indicated in the "Reactor/RWR" column. When not available, use the reactor and resistor information that is provided to build a solution.

For Further Information on ...	See Publication...
1321-RWR	1321-TD001
1204-RWR2	1204-5.1
1204-RWC	1204-IN001
1204-TFxx	1204-IN002

400V Shielded/Unshielded Cable - Meters (Feet)

Drive			No Solution				Reactor Only				Reactor + Damping Resistor or 1321-RWR				Reactor/RWR	Resistor		Available Options			
Frame	**kW**	**kHz**	**1000V**	**1200V**	**1488V**	**1600V**	**1000V**	**1200V**	**1488V**	**1600V**	**1000V**	**1200V**	**1488V**	**1600V**	**Cat. No.**	**Ohms**	**Watts**	**TFA1**	**TFB2**	**RWR2**	**RWC**
1	0.75	2/4	7.6 (25)	83.8 (275)	83.8 (275)	83.8 (275)	91.4 (300)	152.4 (500)	152.4 (500)	152.4 (500)	152.4 (500)	152.4 (500)	152.4 (500)	152.4 (500)				I		I	I
	1.5	2/4	7.6 (25)	106.9 (350)	182.9 (600)	182.9 (600)	91.4 (300)	182.9 (600)	182.9 (600)	182.9 (600)	182.9 (600)	182.9 (600)	182.9 (600)	182.9 (600)				I	I	I	I
	2.2	2/4	7.6 (25)	106.9 (350)	182.9 (600)	182.9 (600)	91.4 (300)	182.9 (600)	182.9 (600)	182.9 (600)	182.9 (600)	182.9 (600)	182.9 (600)	182.9 (600)				I	I	I	I
	4	2/4	7.6 (25)	106.9 (350)	243.8 (800)	243.8 (800)	91.4 (300)	243.8 (800)	243.8 (800)	243.8 (800)	243.8 (800)	243.8 (800)	243.8 (800)	243.8 (800)	1321-RWR8-DP				I		I
	5.5	2/4	7.6 (25)	106.9 (350)	274.3 (900)	304.8 (1000)	91.4 (300)	274.3 (900)	304.8 (1000)	304.8 (1000)	304.8 (1000)	304.8 (1000)	304.8 (1000)	304.8 (1000)	1321-RWR12-DP				I		I
	7.5	2/4	7.6 (25)	106.9 (350)	274.3 (900)	365.8 (1200)	91.4 (300)	274.3 (900)	365.8 (1200)	365.8 (1200)	365.8 (1200)	365.8 (1200)	365.8 (1200)	365.8 (1200)	1321-RWR18-DP				I		I
	11	2/4	7.6 (25)	106.9 (350)	274.3 (900)	365.8 (1200)	91.4 (300)	274.3 (900)	365.8 (1200)	365.8 (1200)	365.8 (1200)	365.8 (1200)	365.8 (1200)	365.8 (1200)	1321-RWR25-DP				I		
2	15	2/4	7.6 (25)	106.9 (350)	274.3 (900)	365.8 (1200)	91.4 (300)	274.3 (900)	365.8 (1200)	365.8 (1200)	365.8 (1200)	365.8 (1200)	365.8 (1200)	365.8 (1200)	1321-RWR25-DP				I		
	18.5	2/4	7.6 (25)	106.9 (350)	274.3 (900)	365.8 (1200)	91.4 (300)	274.3 (900)	365.8 (1200)	365.8 (1200)	365.8 (1200)	365.8 (1200)	365.8 (1200)	365.8 (1200)	1321-RWR35-DP				I		
3	22	2/4	7.6 (25)	106.9 (350)	274.3 (900)	365.8 (1200)	91.4 (300)	274.3 (900)	365.8 (1200)	365.8 (1200)	365.8 (1200)	365.8 (1200)	365.8 (1200)	365.8 (1200)	1321-RWR45-DP				I		
	30	2/4	7.6 (25)	106.9 (350)	274.3 (900)	365.8 (1200)	91.4 (300)	274.3 (900)	365.8 (1200)	365.8 (1200)	365.8 (1200)	365.8 (1200)	365.8 (1200)	365.8 (1200)	1321-RWR55-DP				I		
	37	2/4	12.2 (40)	91.4 (300)	274.3 (900)	365.8 (1200)	76.2 (250)	243.8 (800)	365.8 (1200)	365.8 (1200)	365.8 (1200)	365.8 (1200)	365.8 (1200)	365.8 (1200)	1321-RWR80-DP				I		
4	45	2/4	12.2 (40)	106.9 (350)	274.3 (900)	365.8 (1200)	76.2 (250)	304.8 (1000)	365.8 (1200)	365.8 (1200)	365.8 (1200)	365.8 (1200)	365.8 (1200)	365.8 (1200)	1321-RWR80-DP				I		
5	55	2/4	12.2 (40)	106.9 (350)	274.3 (900)	365.8 (1200)	61.0 (200)	274.3 (900)	365.8 (1200)	365.8 (1200)	365.8 (1200)	365.8 (1200)	365.8 (1200)	365.8 (1200)	1321-RWR100-DP				I		
	75	2/4	18.3 (60)	91.4 (300)	213.4 (700)	304.8 (1000)	45.7 (150)	243.8 (800)	365.8 (1200)	365.8 (1200)	304.8 (1000)	365.8 (1200)	365.8 (1200)	365.8 (1200)	1321-RWR130-DP				I		
6	90	2/4	18.3 (60)	91.4 (300)	213.4 (700)	304.8 (1000)	45.7 (150)	213.4 (700)	365.8 (1200)	365.8 (1200)	304.8 (1000)	365.8 (1200)	365.8 (1200)	365.8 (1200)	1321-RWR160-DP				I		
	110	2/4	24.4 (80)	91.4 (300)	213.4 (700)	274.3 (900)	45.7 (150)	182.9 (600)	365.8 (1200)	365.8 (1200)	274.3 (900)	365.8 (1200)	365.8 (1200)	365.8 (1200)	1321-RWR200-DP				I		
	132	2/4	24.4 (80)	91.4 (300)	182.9 (600)	243.8 (800)	45.7 (150)	152.4 (500)	365.8 (1200)	365.8 (1200)	243.8 (800)	365.8 (1200)	365.8 (1200)	365.8 (1200)	1321-RWR250-DP				I		
9	132	2	24.4 (80)	91.4 (300)	182.9 (600)	243.8 (800)	45.7 (150)	152.4 (500)	365.8 (1200)	365.8 (1200)	243.8 (800)	365.8 (1200)	365.8 (1200)	365.8 (1200)	1321-RWR320-DP				I		
	160	2	24.4 (80)	91.4 (300)	152.4 (500)	213.4 (700)	45.7 (150)	121.9 (400)	365.8 (1200)	365.8 (1200)	243.8 (800)	365.8 (1200)	365.8 (1200)	365.8 (1200)	1321-RWR320-DP				I		
10	200	2	24.4 (80)	76.2 (250)	121.9 (400)	182.9 (600)	36.6 (120)	91.4 (300)	304.8 (1000)	365.8 (1200)	243.8 (800)	365.8 (1200)	365.8 (1200)	365.8 (1200)	1321-3R500-B	20	495 (3)		I		
	250	2	24.4 (80)	76.2 (250)	99.1 (325)	167.6 (550)	36.6 (120)	76.2 (250)	304.8 (1000)	365.8 (1200)	228.6 (750)	335.3 (1100)	365.8 (1200)	365.8 (1200)	1321-3R500-B	20	495 (3)		I		
11	315	2	18.3 (60)	68.6 (225)	99.1 (325)	167.6 (550)	36.6 (120)	68.6 (225)	304.8 (1000)	365.8 (1200)	228.6 (750)	335.3 (1100)	365.8 (1200)	365.8 (1200)	1321-3R600-B	20	495 (3)		I		
	355	2	18.3 (60)	68.6 (225)	99.1 (325)	167.6 (550)	36.6 (120)	68.6 (225)	304.8 (1000)	365.8 (1200)	228.6 (750)	274.3 (900)	365.8 (1200)	365.8 (1200)	1321-3R750-B	20	495 (3)		I		
	400	2	18.3 (60)	68.6 (225)	99.1 (325)	167.6 (550)	36.6 (120)	68.6 (225)	304.8 (1000)	365.8 (1200)	228.6 (750)	274.3 (900)	365.8 (1200)	365.8 (1200)	1321-3R750-B	20	735 (4)		I		
12 (1)	450	2	18.3 (60)	68.6 (225)	99.1 (325)	167.6 (550)	36.6 (120)	68.6 (225)	304.8 (1000)	365.8 (1200)	228.6 (750)	274.3 (900)	365.8 (1200)	365.8 (1200)	2 x 1321-3RB400-B	40	375 (4)		I		
	500	2	12.2 (40)	68.6 (225)	99.1 (325)	167.6 (550)	36.6 (120)	68.6 (225)	304.8 (1000)	365.8 (1200)	198.1 (650)	274.3 (900)	365.8 (1200)	365.8 (1200)	2 x 1321-3R500-B	40	375 (4)		I		
	560	2	12.2 (40)	68.6 (225)	99.1 (325)	167.6 (550)	36.6 (120)	68.6 (225)	304.8 (1000)	365.8 (1200)	198.1 (650)	274.3 (900)	365.8 (1200)	365.8 (1200)	2 x 1321-3R500-B	20	525 (5)				
13	630 (2)	2	12.2 (40)	61.0 (200)	99.1 (325)	167.6 (550)	36.6 (120)	61.0 (200)	304.8 (1000)	365.8 (1200)	198.1 (650)	274.3 (900)	365.8 (1200)	365.8 (1200)	2 x 1321-3R600-B	20	525 (5)				
	710 (2)	2	12.2 (40)	61.0 (200)	99.1 (325)	167.6 (550)	36.6 (120)	61.0 (200)	304.8 (1000)	365.8 (1200)	198.1 (650)	274.3 (900)	365.8 (1200)	365.8 (1200)	2 x 1321-3R750-B	20	525 (5)				
	800 (2)	2	12.2 (40)	61.0 (200)	99.1 (325)	167.6 (550)	36.6 (120)	61.0 (200)	304.8 (1000)	365.8 (1200)	198.1 (650)	274.3 (900)	365.8 (1200)	365.8 (1200)	2 x 1321-3R750-B	20	525 (5)				

(1) Frame 12 drives have dual inverters and require two output reactors. The resistor ratings are per phase values for each reactor.
(2) Some Frame 13 drives require two output reactors to match drive amp rating. The resistor ratings are per phase values for each reactor.

(3) Resistor specification is based on two cables per phase.
(4) Resistor specification is based on three cables per phase.
(5) Resistor specification is based on four cables per phase.

480V Shielded/Unshielded Cable - Meters (Feet)

Drive			No Solution				Reactor Only				Reactor + Damping Resistor or 1321-RWR				Reactor/RWR	Resistor		Available Options			
Frame	HP	kHz	1000V	1200V	1488V	1600V	1000V	1200V	1488V	1600V	1000V	1200V	1488V	1600V	Cat. No.	Ohms	Watts	TFA1	TFB2	RWR2	RWC
1	1	2/4	7.6 (25)	12.2 (40)	83.8 (275)	83.8 (275)	7.6 (25)	91.4 (300)	152.4 (500)	152.4 (500)	152.4 (500)	152.4 (500)	152.4 (500)	152.4 (500)				I		I	I
	2	2/4	7.6 (25)	12.2 (40)	83.8 (275)	83.8 (275)	7.6 (25)	91.4 (300)	182.9 (600)	182.9 (600)	152.4 (500)	182.9 (600)	182.9 (600)	182.9 (600)				I	I	I	I
	3	2/4	7.6 (25)	12.2 (40)	106.9 (350)	152.4 (500)	7.6 (25)	91.4 (300)	182.9 (600)	182.9 (600)	152.4 (500)	182.9 (600)	182.9 (600)	182.9 (600)				I	I	I	I
	5	2/4	7.6 (25)	12.2 (40)	106.9 (350)	152.4 (500)	7.6 (25)	91.4 (300)	243.8 (800)	243.8 (800)	152.4 (500)	243.8 (800)	243.8 (800)	243.8 (800)	1321-RWR8-DP			I	I	I	I
	7.5	2/4	7.6 (25)	12.2 (40)	106.9 (350)	152.4 (500)	7.6 (25)	91.4 (300)	304.8 (1000)	304.8 (1000)	152.4 (500)	304.8 (1000)	304.8 (1000)	304.8 (1000)	1321-RWR12-DP				I		I
	10	2/4	7.6 (25)	12.2 (40)	106.9 (350)	152.4 (500)	7.6 (25)	91.4 (300)	365.8 (1200)	365.8 (1200)	152.4 (500)	365.8 (1200)	365.8 (1200)	365.8 (1200)	1321-RWR18-DP				I		I
	15	2/4	7.6 (25)	12.2 (40)	106.9 (350)	152.4 (500)	7.6 (25)	91.4 (300)	365.8 (1200)	365.8 (1200)	152.4 (500)	365.8 (1200)	365.8 (1200)	365.8 (1200)	1321-RWR25-DP				I		
2	20	2/4	7.6 (25)	12.2 (40)	106.9 (350)	152.4 (500)	7.6 (25)	91.4 (300)	365.8 (1200)	365.8 (1200)	182.9 (600)	365.8 (1200)	365.8 (1200)	365.8 (1200)	1321-RWR25-DP				I		
	25	2/4	7.6 (25)	12.2 (40)	106.9 (350)	152.4 (500)	7.6 (25)	76.2 (250)	365.8 (1200)	365.8 (1200)	152.4 (500)	365.8 (1200)	365.8 (1200)	365.8 (1200)	1321-RWR35-DP				I		
3	30	2/4	7.6 (25)	12.2 (40)	106.9 (350)	152.4 (500)	7.6 (25)	76.2 (250)	365.8 (1200)	365.8 (1200)	152.4 (500)	365.8 (1200)	365.8 (1200)	365.8 (1200)	1321-RWR45-DP				I		
	40	2/4	7.6 (25)	12.2 (40)	106.9 (350)	152.4 (500)	7.6 (25)	76.2 (250)	365.8 (1200)	365.8 (1200)	121.9 (400)	365.8 (1200)	365.8 (1200)	365.8 (1200)	1321-RWR55-DP				I		
	50	2/4	12.2 (40)	18.3 (60)	106.9 (350)	152.4 (500)	12.2 (40)	61.0 (200)	304.8 (1000)	365.8 (1200)	121.9 (400)	365.8 (1200)	365.8 (1200)	365.8 (1200)	1321-RWR80-DP				I		
4	60	2/4	12.2 (40)	18.3 (60)	91.4 (300)	152.4 (500)	12.2 (40)	61.0 (200)	304.8 (1000)	365.8 (1200)	91.4 (300)	365.8 (1200)	365.8 (1200)	365.8 (1200)	1321-RWR80-DP				I		
5	75	2/4	12.2 (40)	18.3 (60)	91.4 (300)	152.4 (500)	12.2 (40)	61.0 (200)	274.3 (900)	365.8 (1200)	91.4 (300)	365.8 (1200)	365.8 (1200)	365.8 (1200)	1321-RWR100-DP				I		
	100	2/4	12.2 (40)	24.4 (80)	91.4 (300)	137.2 (450)	12.2 (40)	61.0 (200)	243.8 (800)	365.8 (1200)	91.4 (300)	365.8 (1200)	365.8 (1200)	365.8 (1200)	1321-RWR130-DP				I		
6	125	2/4	12.2 (40)	24.4 (80)	91.4 (300)	137.2 (450)	12.2 (40)	61.0 (200)	243.8 (800)	365.8 (1200)	76.2 (250)	304.8 (1000)	365.8 (1200)	365.8 (1200)	1321-RWR160-DP				I		
	150	2/4	12.2 (40)	24.4 (80)	91.4 (300)	137.2 (450)	12.2 (40)	61.0 (200)	243.8 (800)	304.8 (1000)	76.2 (250)	274.3 (900)	365.8 (1200)	365.8 (1200)	1321-RWR200-DP				I		
	200	2/4	12.2 (40)	30.5 (100)	91.4 (300)	137.2 (450)	12.2 (40)	61.0 (200)	243.8 (800)	304.8 (1000)	61.0 (200)	274.3 (900)	365.8 (1200)	365.8 (1200)	1321-RWR250-DP				I		
9	200	2	12.2 (40)	30.5 (100)	91.4 (300)	152.4 (500)	12.2 (40)	45.7 (150)	152.4 (500)	228.6 (750)	61.0 (200)	274.3 (900)	365.8 (1200)	365.8 (1200)	1321-RWR320-DP				I		
	250	2	12.2 (40)	30.5 (100)	91.4 (300)	152.4 (500)	12.2 (40)	45.7 (150)	121.9 (400)	182.9 (600)	61.0 (200)	243.8 (800)	365.8 (1200)	365.8 (1200)	1321-RWR320-DP				I		
10	300	2	12.2 (40)	30.5 (100)	61.0 (200)	121.9 (400)	12.2 (40)	45.7 (150)	61.0 (200)	121.9 (400)	61.0 (200)	243.8 (800)	304.8 (1000)	365.8 (1200)	1321-3RB400-B	20	495 (3)		I		
	350	2	12.2 (40)	30.5 (100)	61.0 (200)	121.9 (400)	12.2 (40)	45.7 (150)	61.0 (200)	121.9 (400)	61.0 (200)	243.8 (800)	304.8 (1000)	365.8 (1200)	1321-3R500-B	20	495 (3)		I		
	450	2	12.2 (40)	30.5 (100)	61.0 (200)	121.9 (400)	12.2 (40)	45.7 (150)	61.0 (200)	121.9 (400)	61.0 (200)	213.4 (700)	304.8 (1000)	365.8 (1200)	1321-3R500-B	20	495 (3)		I		
11	500	2	12.2 (40)	30.5 (100)	61.0 (200)	121.9 (400)	12.2 (40)	45.7 (150)	61.0 (200)	121.9 (400)	61.0 (200)	213.4 (700)	304.8 (1000)	365.8 (1200)	1321-3R750-B	20	495 (3)		I		
	600	2	12.2 (40)	30.5 (100)	61.0 (200)	121.9 (400)	12.2 (40)	45.7 (150)	61.0 (200)	121.9 (400)	61.0 (200)	213.4 (700)	304.8 (1000)	365.8 (1200)	1321-3R750-B	20	735 (4)		I		
12 (1)	700	2	12.2 (40)	30.5 (100)	61.0 (200)	121.9 (400)	12.2 (40)	45.7 (150)	61.0 (200)	121.9 (400)	45.7 (150)	182.9 (600)	304.8 (1000)	365.8 (1200)	2 x 1321-3RB400-B	40	375 (4)		I		
	800	2	12.2 (40)	30.5 (100)	61.0 (200)	121.9 (400)	12.2 (40)	45.7 (150)	61.0 (200)	121.9 (400)	45.7 (150)	182.9 (600)	304.8 (1000)	365.8 (1200)	2 x 1321-3R500-B	40	375 (4)		I		
	900	2	12.2 (40)	30.5 (100)	61.0 (200)	121.9 (400)	12.2 (40)	45.7 (150)	61.0 (200)	121.9 (400)	45.7 (150)	182.9 (600)	304.8 (1000)	365.8 (1200)	2 x 1321-3R500-B	20	525 (5)				

480V Shielded/Unshielded Cable - Meters (Feet) (continued)

Drive			No Solution				Reactor Only				Reactor + Damping Resistor or 1321-RWR				Reactor/RWR	Resistor		Available Options			
Frame	HP	kHz	1000V	1200V	1488V	1600V	1000V	1200V	1488V	1600V	1000V	1200V	1488V	1600V	Cat. No.	Ohms	Watts	TFA1	TFB2	RWR2	RWC
13	1000 (2)	2	12.2 (40)	30.5 (100)	61.0 (200)	121.9 (400)	12.2 (40)	45.7 (150)	61.0 (200)	121.9 (400)	45.7 (150)	152.4 (500)	304.8 (1000)	365.8 (1200)	2 x 1321-3R600-B	20	525 (5)				
	1200 (2)	2	12.2 (40)	30.5 (100)	61.0 (200)	121.9 (400)	12.2 (40)	45.7 (150)	61.0 (200)	121.9 (400)	45.7 (150)	152.4 (500)	304.8 (1000)	365.8 (1200)	2 x 1321-3R750-B	20	525 (5)				
	1250 (2)	2	12.2 (40)	30.5 (100)	61.0 (200)	121.9 (400)	12.2 (40)	45.7 (150)	61.0 (200)	121.9 (400)	45.7 (150)	152.4 (500)	304.8 (1000)	365.8 (1200)	2 x 1321-3R750-B	20	525 (5)				

(1) Frame 12 drives have dual inverters and require two output reactors. The resistor ratings are per phase values for each reactor.
(2) Some Frame 13 drives require two output reactors to match drive amp rating. The resistor ratings are per phase values for each reactor.
(3) Resistor specification is based on two cables per phase.
(4) Resistor specification is based on three cables per phase.
(5) Resistor specification is based on four cables per phase.

600V Shielded/Unshielded Cable - Meters (Feet)

Drive			No Solution		Reactor Only		Reactor + Damping Resistor or 1321-RWR		Reactor/RWR	Resistor		Available Options			
Frame	HP	kHz	1488V	1850V	1488V	1850V	1488V	1850V	Cat. No.	Ohms	Watts	TFA1	TFB2	RWR2	RWC
1	1	2/4	30.5 (100)	121.9 (400)	121.9 (400)	121.9 (400)	121.9 (400)	121.9 (400)				I		I	I
	2	2/4	30.5 (100)	152.4 (500)	121.9 (400)	152.4 (500)	152.4 (500)	152.4 (500)				I	I	I	I
	3	2/4	30.5 (100)	152.4 (500)	121.9 (400)	182.9 (600)	182.9 (600)	182.9 (600)				I	I	I	I
	5	2/4	30.5 (100)	152.4 (500)	121.9 (400)	243.8 (800)	243.8 (800)	243.8 (800)	1321-RWR8-EP			I	I	I	I
	7.5	2/4	30.5 (100)	152.4 (500)	121.9 (400)	304.8 (1000)	304.8 (1000)	304.8 (1000)	1321-RWR8-EP				I		I
	10	2/4	30.5 (100)	152.4 (500)	121.9 (400)	365.8 (1200)	365.8 (1200)	365.8 (1200)	1321-RWR12-EP				I		I
	15	2/4	30.5 (100)	152.4 (500)	121.9 (400)	365.8 (1200)	365.8 (1200)	365.8 (1200)	1321-RWR18-EP				I		
2	20	2/4	30.5 (100)	152.4 (500)	121.9 (400)	365.8 (1200)	365.8 (1200)	365.8 (1200)	1321-RWR25-EP				I		
	25	2/4	30.5 (100)	152.4 (500)	121.9 (400)	365.8 (1200)	365.8 (1200)	365.8 (1200)	1321-RWR25-EP				I		
3	30	2/4	30.5 (100)	152.4 (500)	121.9 (400)	365.8 (1200)	365.8 (1200)	365.8 (1200)	1321-RWR35-EP				I		
	40	2/4	30.5 (100)	152.4 (500)	121.9 (400)	365.8 (1200)	365.8 (1200)	365.8 (1200)	1321-RWR45-EP				I		
	50	2/4	36.6 (120)	152.4 (500)	121.9 (400)	365.8 (1200)	365.8 (1200)	365.8 (1200)	1321-RWR55-EP				I		
4	60	2/4	36.6 (120)	152.4 (500)	121.9 (400)	365.8 (1200)	365.8 (1200)	365.8 (1200)	1321-RWR80-EP				I		
5	75	2/4	36.6 (120)	152.4 (500)	121.9 (400)	365.8 (1200)	365.8 (1200)	365.8 (1200)	1321-RWR80-EP				I		
	100	2/4	42.7 (140)	152.4 (500)	121.9 (400)	304.8 (1000)	365.8 (1200)	365.8 (1200)	1321-RWR100-EP				I		
6	125	2/4	42.7 (140)	152.4 (500)	121.9 (400)	304.8 (1000)	365.8 (1200)	365.8 (1200)	1321-RWR130-EP				I		
	150	2/4	42.7 (140)	152.4 (500)	121.9 (400)	304.8 (1000)	365.8 (1200)	365.8 (1200)	1321-RWR160-EP				I		
9	150	2	42.7 (140)	152.4 (500)	61.0 (200)	304.8 (1000)	365.8 (1200)	365.8 (1200)	1321-RWR200-EP				I		
	200	2	42.7 (140)	152.4 (500)	61.0 (200)	304.8 (1000)	365.8 (1200)	365.8 (1200)	1321-RWR250-EP				I		
10	250	2	42.7 (140)	152.4 (500)	61.0 (200)	304.8 (1000)	365.8 (1200)	365.8 (1200)	1321-3RB250-B	50	315		I		
	350	2	42.7 (140)	152.4 (500)	61.0 (200)	304.8 (1000)	365.8 (1200)	365.8 (1200)	1321-3RB350-B	20	585 (3)		I		
	400	2	42.7 (140)	152.4 (500)	61.0 (200)	304.8 (1000)	365.8 (1200)	365.8 (1200)	1321-3RB400-B	20	585 (3)		I		
	450	2	42.7 (140)	152.4 (500)	61.0 (200)	304.8 (1000)	365.8 (1200)	365.8 (1200)	1321-3R500-B	20	585 (3)		I		
11	500	2	42.7 (140)	152.4 (500)	61.0 (200)	304.8 (1000)	365.8 (1200)	365.8 (1200)	1321-3R500-B	20	585 (3)		I		
	600	2	42.7 (140)	152.4 (500)	61.0 (200)	304.8 (1000)	365.8 (1200)	365.8 (1200)	1321-3R600-B	20	585 (3)		I		
12 (1)	700	2	42.7 (140)	152.4 (500)	61.0 (200)	304.8 (1000)	365.8 (1200)	365.8 (1200)	2 X 1321-3RB320-B	40	300 (3)		I		
	800	2	42.7 (140)	152.4 (500)	61.0 (200)	304.8 (1000)	365.8 (1200)	365.8 (1200)	2 X 1321-3RB400-C	40	480 (4)		I		
	900	2	42.7 (140)	152.4 (500)	61.0 (200)	304.8 (1000)	365.8 (1200)	365.8 (1200)	2 X 1321-3R400-B	40	480 (4)				
13	1000	2	42.7 (140)	152.4 (500)	61.0 (200)	304.8 (1000)	365.8 (1200)	365.8 (1200)	1321-3R1000-C	20	960 (4)				
	1100	2	42.7 (140)	152.4 (500)	61.0 (200)	304.8 (1000)	365.8 (1200)	365.8 (1200)	1321-3R1000-B	10	1440 (5)				
	1300 (2)	2	42.7 (140)	152.4 (500)	61.0 (200)	304.8 (1000)	365.8 (1200)	365.8 (1200)	2 X 1321-3R600-B	20	720 (5)				

(1) Frame 12 drives have dual inverters and require two output reactors. The resistor ratings are per phase values for each reactor.
(2) Some Frame 13 drives require two output reactors to match drive amp rating. The resistor ratings are per phase values for each reactor.
(3) Resistor specification is based on two cables per phase.
(4) Resistor specification is based on three cables per phase.
(5) Resistor specification is based on four cables per phase.

690V Shielded/Unshielded Cable - Meters (Feet)

Drive			No Solution		Reactor Only		Reactor + Damping Resistor		Reactor	Resistor		Available Options			
Frame	kW	kHz	1850V	2000V	1850V	2000V	1850V	2000V	Cat. No.	Ohms	Watts	TFA1	TFB2	RWR2	RWC
5	45	2/4	30.5 (100)	76.2 (250)	91.4 (300)	152.4 (500)	365.8 (1200)	365.8 (1200)	1321-3R80-C	50	345/690				
	55	2/4	30.5 (100)	76.2 (250)	91.4 (300)	152.4 (500)	365.8 (1200)	365.8 (1200)	1321-3R80-C	50	345/690				
	75	2/4	30.5 (100)	76.2 (250)	91.4 (300)	152.4 (500)	365.8 (1200)	365.8 (1200)	1321-3R100-C	50	345/690				
	90	2/4	30.5 (100)	76.2 (250)	91.4 (300)	152.4 (500)	365.8 (1200)	365.8 (1200)	1321-3R130-C	50	375/750				
6	110	2/4	30.5 (100)	76.2 (250)	91.4 (300)	152.4 (500)	365.8 (1200)	365.8 (1200)	1321-3R160-C	50	375/750				
	132	2/4	30.5 (100)	76.2 (250)	91.4 (300)	152.4 (500)	365.8 (1200)	365.8 (1200)	1321-3R200-C	50	375/750				
9	160	2	30.5 (100)	68.6 (225)	91.4 (300)	152.4 (500)	274.3 (900)	365.8 (1200)	1321-3RB250-C	50	480				
	200	2	30.5 (100)	68.6 (225)	91.4 (300)	152.4 (500)	274.3 (900)	365.8 (1200)	1321-3RB250-C	50	480				
10	250	2	30.5 (100)	68.6 (225)	76.2 (250)	121.9 (400)	274.3 (900)	365.8 (1200)	1321-3RB320-C	50	480				
	315	2	30.5 (100)	68.6 (225)	76.2 (250)	121.9 (400)	274.3 (900)	365.8 (1200)	1321-3RB400-C	20	945 (3)				
	355	2	30.5 (100)	68.6 (225)	76.2 (250)	121.9 (400)	274.3 (900)	365.8 (1200)	1321-3R500-C	20	945 (3)				
	400	2	30.5 (100)	68.6 (225)	76.2 (250)	121.9 (400)	243.8 (800)	304.8 (1000)	1321-3R500-C	20	945 (3)				
11	450	2	30.5 (100)	68.6 (225)	76.2 (250)	121.9 (400)	243.8 (800)	304.8 (1000)	1321-3R600-C	20	945 (3)				
	500	2	30.5 (100)	68.6 (225)	76.2 (250)	121.9 (400)	243.8 (800)	304.8 (1000)	1321-3R600-C	20	945 (3)				
	560	2	30.5 (100)	68.6 (225)	61.0 (200)	91.4 (300)	243.8 (800)	304.8 (1000)	1321-3R750-C	20	945 (3)				
12 (1)	630	2	30.5 (100)	68.6 (225)	61.0 (200)	91.4 (300)	243.8 (800)	304.8 (1000)	2 X 1321-3RB400-C	40	480 (3)				
	710	2	30.5 (100)	68.6 (225)	61.0 (200)	91.4 (300)	243.8 (800)	304.8 (1000)	2 X 1321-3R500-C	40	645 (4)				
	800	2	30.5 (100)	68.6 (225)	61.0 (200)	91.4 (300)	243.8 (800)	304.8 (1000)	2 X 1321-3R500-C	40	645 (4)				
13	900 (2)	2	30.5 (100)	68.6 (225)	61.0 (200)	91.4 (300)	243.8 (800)	304.8 (1000)	2 X 1321-3R600-C	40	645 (4)				
	1000 (2)	2	30.5 (100)	68.6 (225)	48.8 (160)	91.4 (300)	243.8 (800)	304.8 (1000)	2 X 1321-3R600-C	20	840 (5)				
	1100 (2)	2	30.5 (100)	68.6 (225)	48.8 (160)	91.4 (300)	243.8 (800)	304.8 (1000)	2 X 1321-3R750-C	20	840 (5)				

(1) Frame 12 drives have dual inverters and require two output reactors. The resistor ratings are per phase values for each reactor.
(2) Some Frame 13 drives require two output reactors to match drive amp rating. The resistor ratings are per phase values for each reactor.
(3) Resistor specification is based on two cables per phase.
(4) Resistor specification is based on three cables per phase.
(5) Resistor specification is based on four cables per phase.

Power Terminal Block Specifications

Frames 1…4 Terminal Block Locations

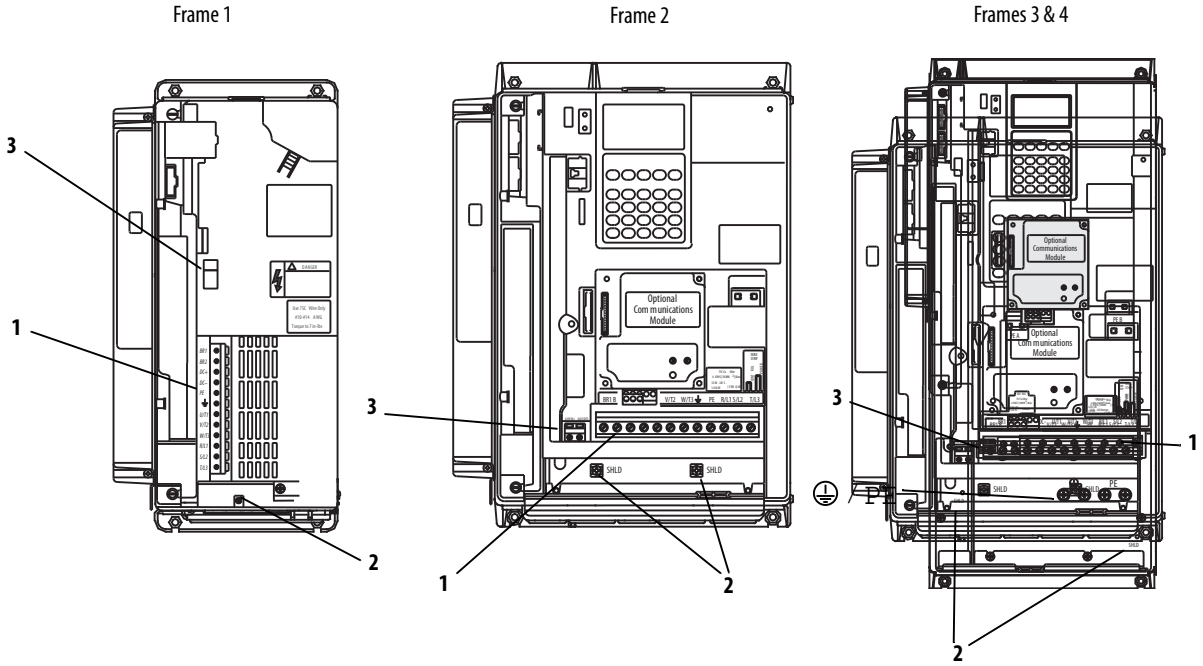

No.	Name	Frame	Description	Wire Size Range(2)		Torque		Terminal Bolt Size(3)
				Maximum	Minimum	Maximum	Recommended	
1	Power Terminal Block	1	Input power and motor connections	4.0 mm^2 (10 AWG)	0.5 mm^2 (22 AWG)	1.7 N•m (15 lb•in)	0.8 N•m (7 lb•in)	—
		2	Input power and motor connections	10.0 mm^2 (6 AWG)	0.8 mm^2 (18 AWG)	1.7 N•m (15 lb•in)	1.4 N•m (12 lb•in)	—
		3	Input power and motor connections	25.0 mm^2 (3 AWG)	2.5 mm^2 (14 AWG)	3.6 N•m (32 lb•in)	1.8 N•m (16 lb•in)	—
			BR1, BR2	10.0 mm^2 (6 AWG)	0.8 mm^2 (18 AWG)	1.7 N•m (15 lb•in)	1.4 N•m (12 lb•in)	—
		4	Input power and motor connections	35.0 mm^2 (1/0 AWG)	10 mm^2 (8 AWG)	4.0 N•m (24 lb•in)	4.0 N•m (24 lb•in)	—
2	SHLD Terminal	1…4	Terminating point for wiring shields	—	—	1.6 N•m (14 lb•in)	1.6 N•m (14 lb•in)	—
3	AUX Terminal Block	1…4	Auxiliary Control Voltage (1) PS+, PS-	1.5 mm^2 (16 AWG)	0.2 mm^2 (24 AWG)	—	—	—

(1) External control power: UL Installation - 300V DC, ±10%, Non UL Installation - 270…600V DC, ±10%. Frame 1…6, 100 W
(2) Maximum/minimum sizes that the terminal block will accept - these are not recommendations.
(3) Apply counter torque to the nut on the other side of terminations when tightening or loosening the terminal bolt in order to avoid damage to the terminal.

Frames 5 & 6 Terminal Block Locations

Frame 5

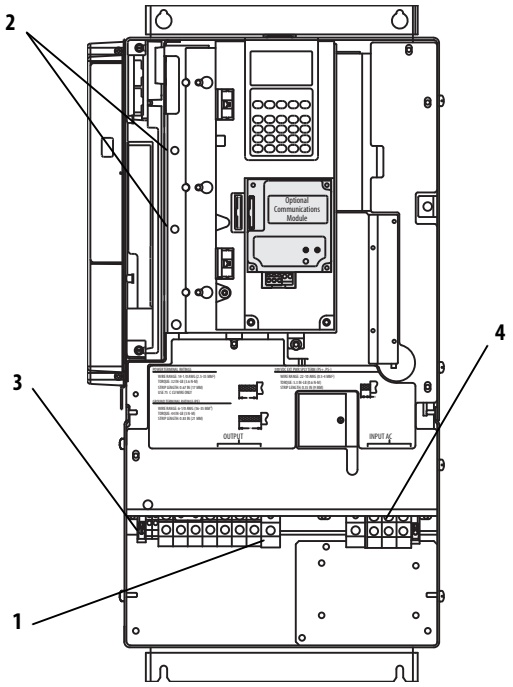

Frame 6

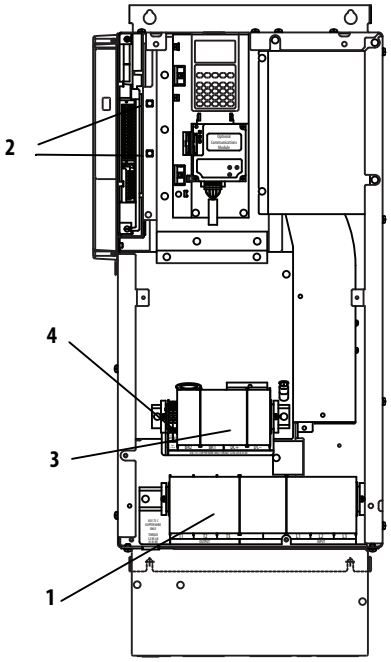

No.	Name	Frame	Description	Wire Size Range(3)		Torque		Terminal Bolt Size(6)
				Maximum	Minimum	Maximum	Recommended	
1	Power Terminal Block	5 (75 HP)(1)	R, S, T, BR1, 2, DC+, DC-, U, V, and W	50.0 mm^2 (1/0 AWG)	2.5 mm^2 (14 AWG)	See Note (5)	See Note (5)	—
			PE	50.0 mm^2 (1/0 AWG)	4.0 mm^2 (12 AWG)			—
		5 (100 HP)(1)	R, S, T, DC+, DC-, U, V, and W	70.0 mm^2 (2/0 AWG)	16.0 mm^2 (6 AWG)			—
			BR1, BR2	50.0 mm^2 (1/0 AWG)	2.5 mm^2 (14 AWG)			—
			PE	50.0 mm^2 (1/0 AWG)	4.0 mm^2 (12 AWG)			—
		6	Input power and motor connections	120.0 mm^2 (4/0 AWG)(4)	2.5 mm^2 (14 AWG)	6 N•m (52 lb•in)	6 N•m (52 lb•in)	—
2	SHLD Terminal	5 & 6	Terminating point for wiring shields	—	—	1.6 N•m (14 lb•in)	1.6 N•m (14 lb•in)	—
3	AUX Terminal Block	5 & 6	Auxiliary Control Voltage (2) PS+, PS-	4.0 mm^2 (10 AWG)	0.5 mm^2 (22 AWG)	0.6 N•m (5.3 lb•in)	0.6 N•m (5.3 lb•in)	—
4	Fan Terminal Block (Common Bus Only)	5 & 6	User Supplied Fan Voltage 0V AC, 120V AC, 240V AC	4.0 mm^2 (10 AWG)	0.5 mm^2 (22 AWG)	0.6 N•m (5.3 lb•in)	0.6 N•m (5.3 lb•in)	—

(1) Not all terminals present on all drives.
(2) External control power: UL Installation - 300V DC, ±10%, Non UL Installation - 270…600V DC, ±10%. Frame 1…6, 100 W
(3) Maximum/minimum sizes that the terminal block will accept - these are not recommendations.
(4) If necessary, two wires can be used in parallel to any of these terminals using two lugs.
(5) See the terminal block label inside the drive.
(6) Apply counter torque to the nut on the other side of terminations when tightening or loosening the terminal bolt in order to avoid damage to the terminal.

Frame 9 Terminal Block Locations

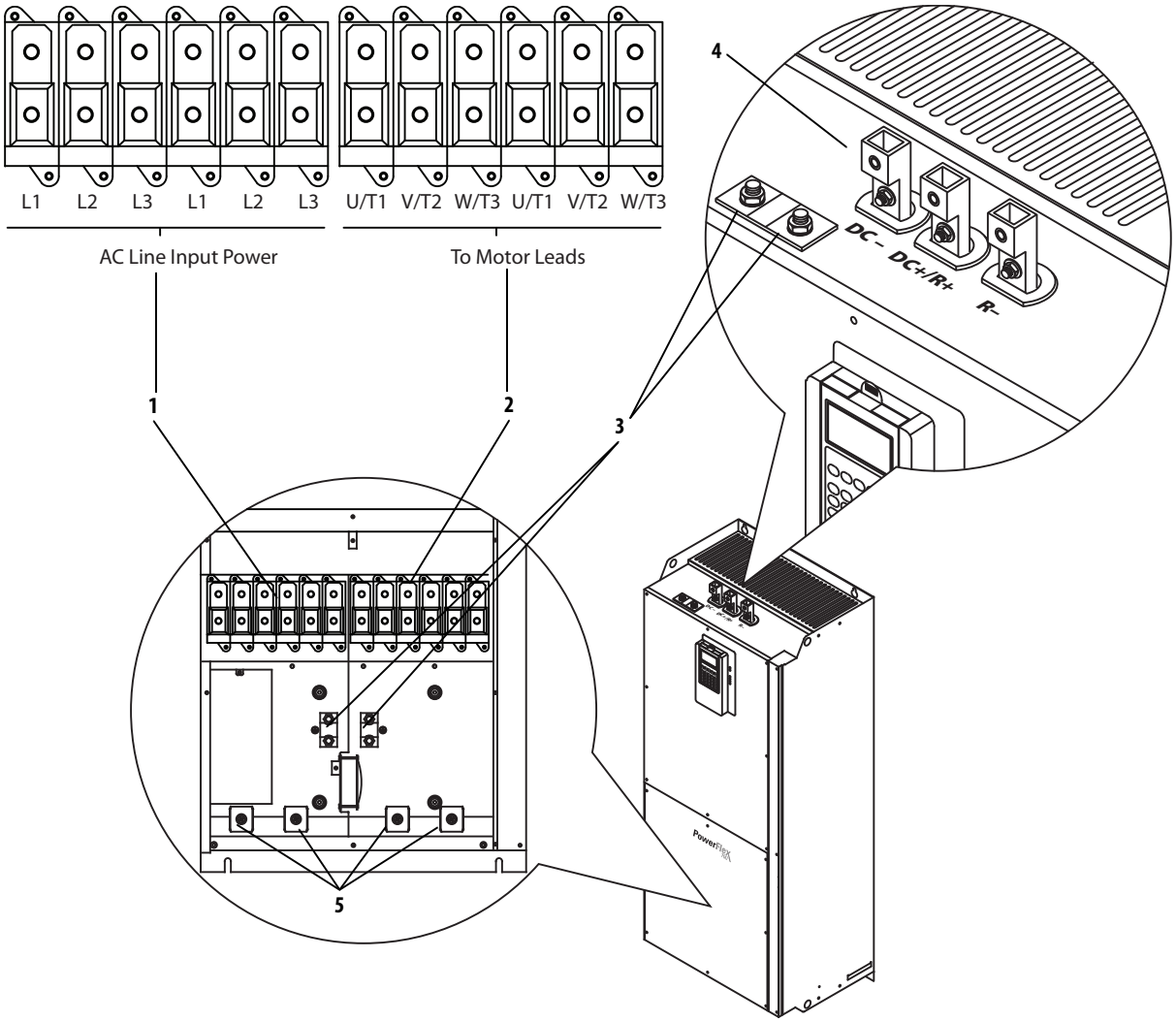

No.	Name	Description	Wire Size Range (3)		Torque
			Maximum	Minimum	Recommended
1	Input Power Terminal Block (1) L1, L2, L3	Input power	185.0 mm^2 (350 MCM)	95.0 mm^2 (4/0 AWG)	40 N•m (354 lb•in)
2	Output Power Terminal Block (1) U/T1, V/T2, W/T3	Motor connections	185.0 mm^2 (350 MCM)	95.0 mm^2 (4/0 AWG)	40 N•m (354 lb•in)
3	SHLD Terminal, PE, Motor Ground	Terminating point for wiring shields	95.0 mm^2 (4/0 AWG)	5.0 mm2 (10 AWG)	22 N•m (195 lb•in)
4	DC Bus (2) (2 Terminals; DC–, DC+)	DC input or external brake *(Internal Brake option not ordered)*	185.0 mm^2 (350 MCM)	95.0 mm^2 (4/0 AWG)	40 N•m (354 lb•in)
	DC Bus w/Brake (2) (3 Terminals; DC–, DC+/R+, R–)	DC input/internal brake *(Internal Brake option is ordered)*	185.0 mm^2 (350 MCM)	95.0 mm^2 (4/0 AWG)	40 N•m (354 lb•in)
5	Cable Clamp for Shield				

(1) Do Not exceed maximum wire size. Parallel connections may be required.
(2) DC terminal and brake lugs can be removed.
(3) Maximum/minimum sizes that the terminal block will accept - these are not recommendations.

Frame 10 Terminal Block Locations

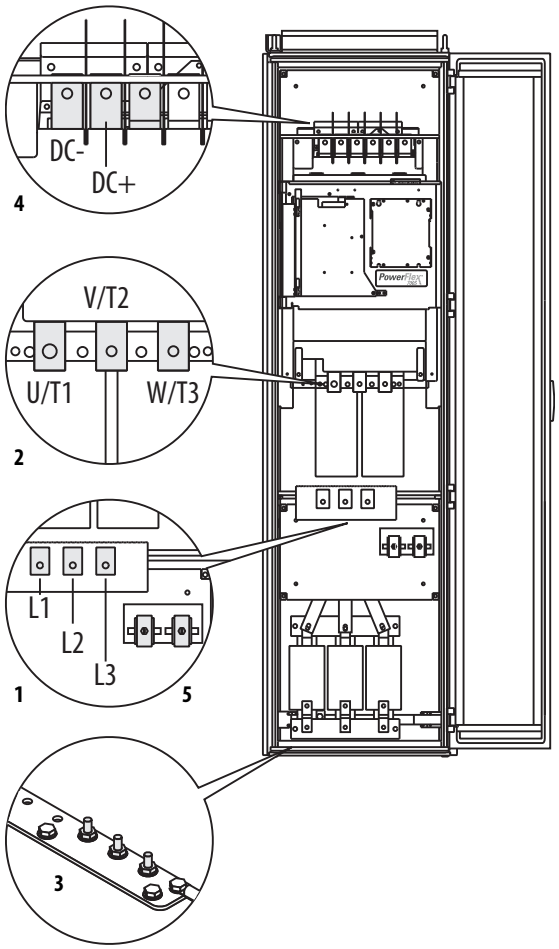

No.	Name	Description	Wire Size Range (1)(2)		Torque	Terminal Bolt Size(3) (4)
			Maximum	Minimum	Recommended	
1	Input Power Terminal Block L1, L2, L3(3)	Input power	300 mm^2 (600 MCM)	2.1 mm^2 (14 AWG)	40 N•m (354 lb•in)	M12
2	Output Power Terminal Block (3) U/T1, V/T2, W/T3	Motor connections	300 mm^2 (600 MCM)	2.1 mm^2 (14 AWG)	40 N•m (354 lb•in)	M12
3	SHLD Terminal, PE, Motor Ground(3)	Terminating point for wiring shields	300 mm^2 (600 MCM)	2.1 mm^2 (14 AWG)	40 N•m (354 lb•in)	M10
4	DC Bus (3) (2 Terminals; DC–, DC+)	DC input or external brake	300 mm^2 (600 MCM)	2.1 mm^2 (14 AWG)	40 N•m (354 lb•in)	M12
5	Cable Clamp for Shield					

(1) Maximum/minimum sizes that the terminal block will accept - these are not recommendations.
(2) Do Not exceed maximum wire size. Parallel connections may be required.
(3) These connections are bus bar type terminations and require the use of lug type connectors.
(4) Apply counter torque to the nut on the other side of terminations when tightening or loosening the terminal bolt in order to avoid damage to the terminal.

Frame 11 Terminal Block Locations

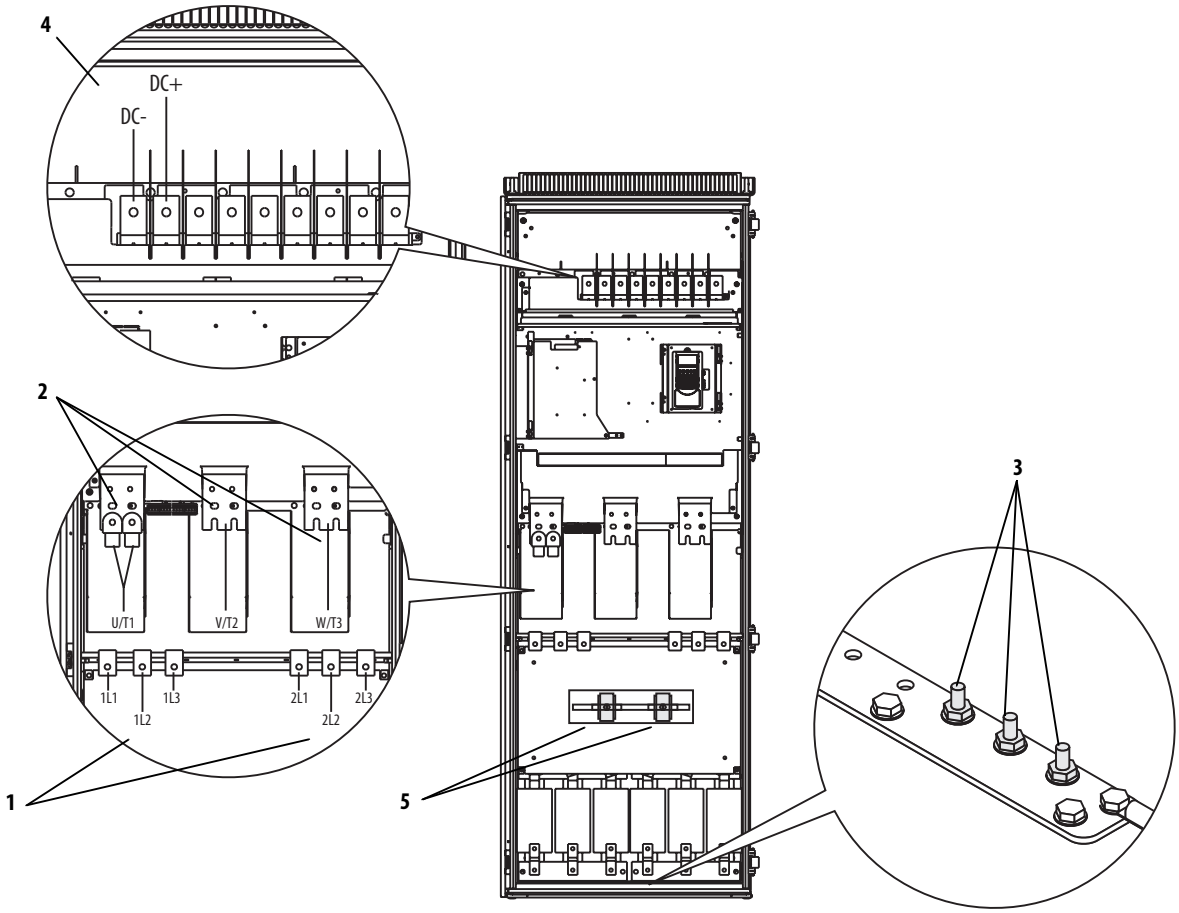

No.	Name	Description	Wire Size Range (1)(2)		Torque	Terminal Bolt Size (3) (4)
			Maximum	Minimum	Recommended	
1	Input Power Terminal Block 1L1, 1L2, 1L3, 2L1, 2L2, 2L3 (3)	AC Input power	300 mm^2 (600 MCM)	2.1 mm^2 (14 AWG)	40 N•m (354 lb•in)	M12
2	Output Power Terminal Block (3) U/T1, V/T2, W/T3	Motor connections	300 mm^2 (600 MCM)	2.1 mm^2 (14 AWG)	40 N•m (354 lb•in)	M12
3	SHLD Terminal, PE, Motor Ground (3)	Terminating point for wiring shields	300 mm^2 (600 MCM)	2.1 mm^2 (14 AWG)	40 N•m (354 lb•in)	M10
4	DC Bus (3) (2 Terminals; DC–, DC+)	DC input or external brake	300 mm^2 (600 MCM)	2.1 mm^2 (14 AWG)	40 N•m (354 lb•in)	M12
5	Cable Clamp for Shield					

(1) Maximum/minimum sizes that the terminal block will accept - these are not recommendations.
(2) Do Not exceed maximum wire size. Parallel connections may be required.
(3) These connections are bus bar type terminations and require the use of lug type connectors.
(4) Apply counter torque to the nut on the other side of terminations when tightening or loosening the terminal bolt in order to avoid damage to the terminal.

Frame 12 Terminal Block Locations

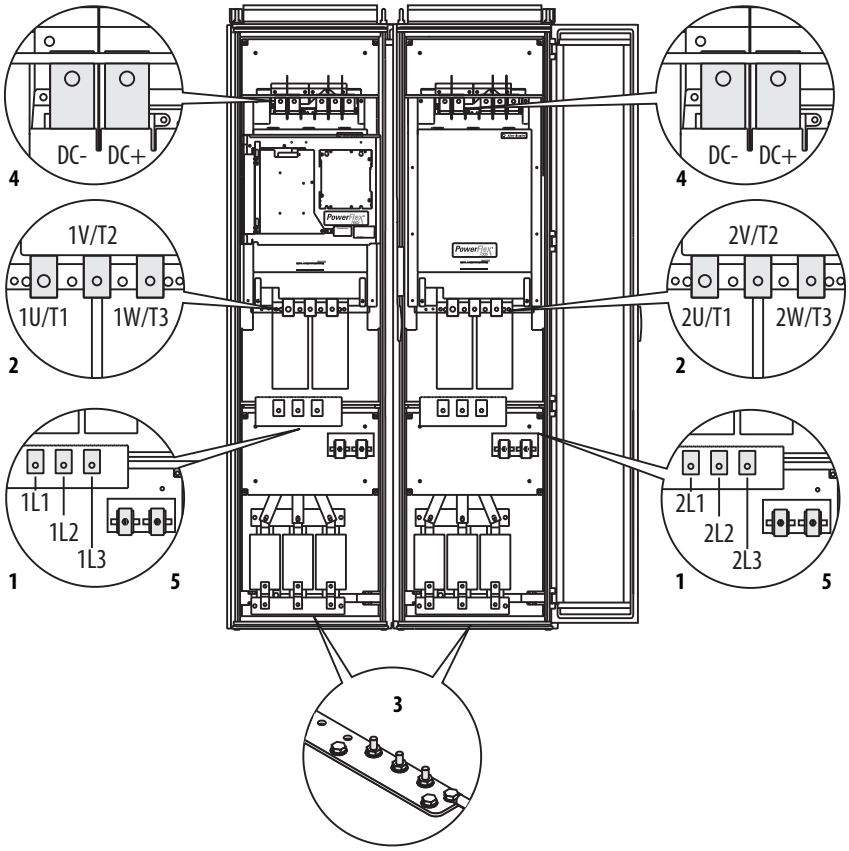

No.	Name	Description	Wire Size Range (1)(2)		Torque	Terminal Bolt Size (3) (4)
			Maximum	Minimum	Recommended	
1	Input Power Terminal Block 1L1, 1L2, 1L3, 2L1, 2L2, 2L3 (3)	Input power	300 mm^2 (600 MCM)	2.1 mm^2 (14 AWG)	40 N•m (354 lb•in)	M12
2	Output Power Terminal Block (3) 1U/1T1, 1V/1T2, 1W/1T3, 2U/2T1, 2V/2T2, 2W/2T3	Motor connections	300 mm^2 (600 MCM)	2.1 mm^2 (14 AWG)	40 N•m (354 lb•in)	M12
3	SHLD Terminal, PE, Motor Ground (3)	Terminating point for wiring shields	300 mm^2 (600 MCM)	2.1 mm^2 (14 AWG)	40 N•m (354 lb•in)	M10
4	DC Bus (3) (2 Terminals; DC–, DC+)	DC input or external brake	300 mm^2 (600 MCM)	2.1 mm^2 (14 AWG)	40 N•m (354 lb•in)	M12
5	Cable Clamp for Shield					

(1) Maximum/minimum sizes that the terminal block will accept - these are not recommendations.
(2) Do Not exceed maximum wire size. Parallel connections may be required.
(3) These connections are bus bar type terminations and require the use of lug type connectors.
(4) Apply counter torque to the nut on the other side of terminations when tightening or loosening the terminal bolt in order to avoid damage to the terminal.

Frame 13 Terminal Block Locations

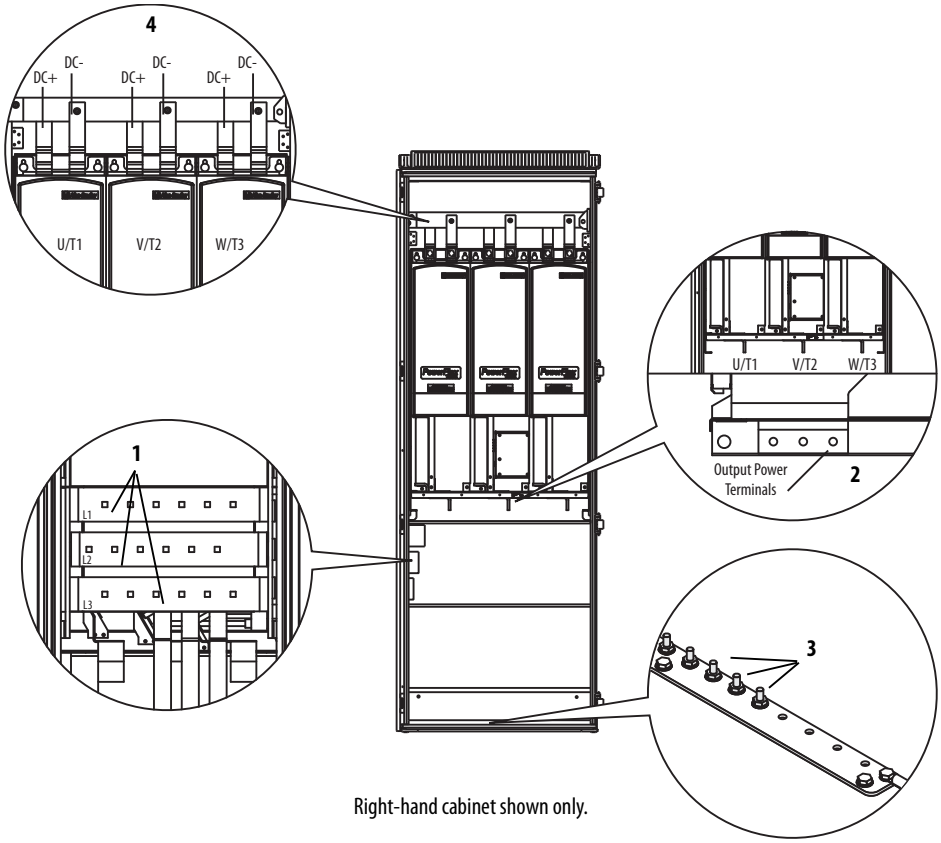

Right-hand cabinet shown only.

No.	Name	Description	Wire Size Range(1)(2)		Torque	Terminal Bolt Size(3) (4)
			Maximum	Minimum	Recommended	
1	Input Power Terminal Block L1, L2, L3(1)	Input power	300 mm^2 (600 MCM)	2.1 mm^2 (14 AWG)	40 N•m (354 lb•in)	M12
2	Output Power Terminal Block(3) U/T1, V/T2, W/T3	Motor connections	300 mm^2 (600 MCM)	2.1 mm^2 (14 AWG)	40 N•m (354 lb•in)	M12
3	SHLD Terminal, PE, Motor Ground(3)	Terminating point for wiring shields	300 mm^2 (600 MCM)	2.1 mm^2 (14 AWG)	40 N•m (354 lb•in)	M10
4	DC Bus(3) (3 Terminals; DC–, DC+)	DC input or external brake	300 mm^2 (600 MCM)	2.1 mm^2 (14 AWG)	40 N•m (354 lb•in)	M12

(1) Maximum/minimum sizes that the terminal block will accept - these are not recommendations.
(2) Do Not exceed maximum wire size. Parallel connections may be required.
(3) These connections are bus bar type terminations and require the use of lug type connectors.
(4) Apply counter torque to the nut on the other side of terminations when tightening or loosening the terminal bolt in order to avoid damage to the terminal.

Frame 14 Terminal Block Locations

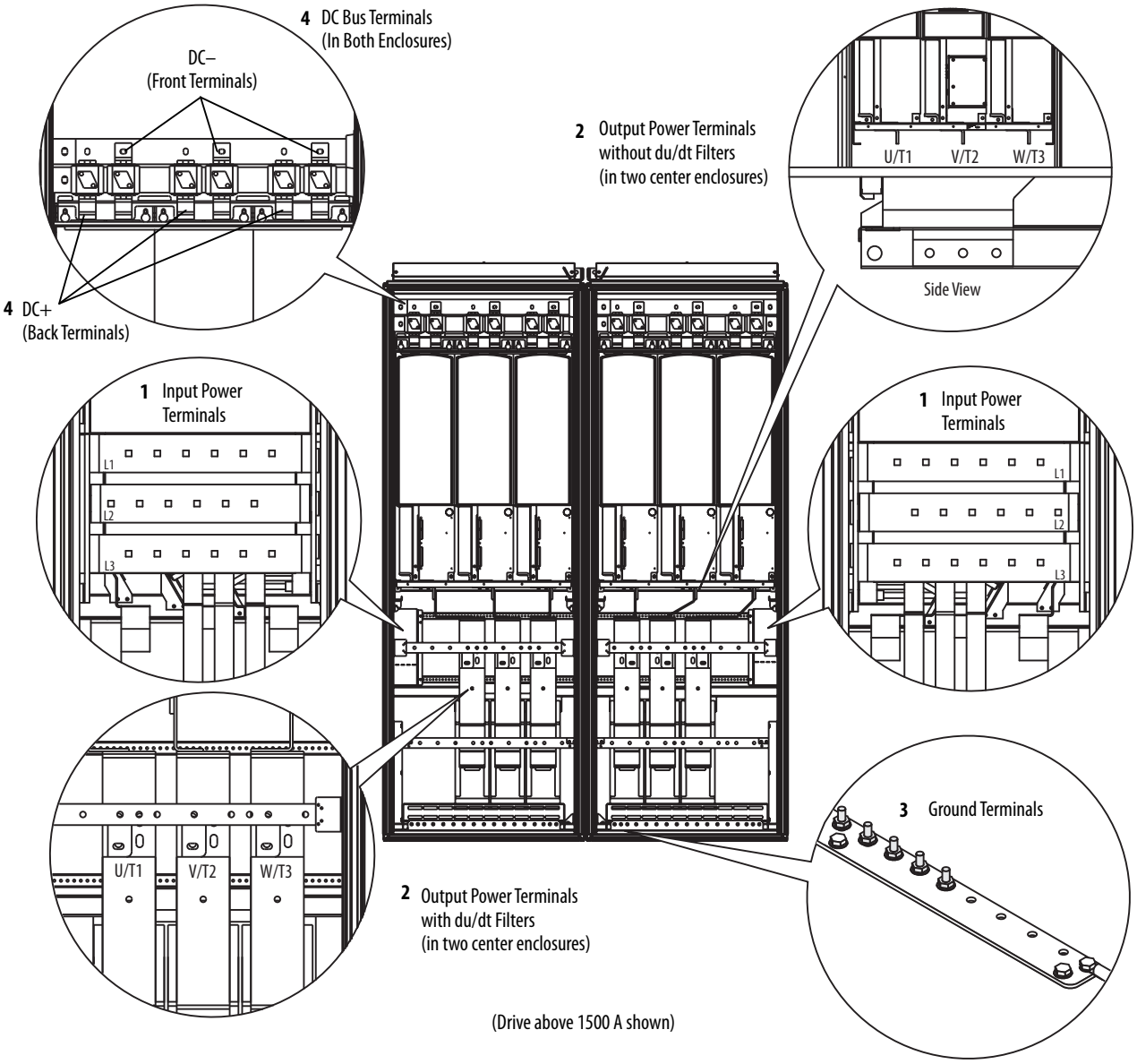

No.	Name	Description	Wire Size Range (1)(2)		Torque	Terminal Bolt Size (3) (4)
			Maximum	Minimum	Recommended	
1	Input Power Terminal Block L1, L2, L3 (1)	Input power	300 mm^2 (600 MCM)	2.1 mm^2 (14 AWG)	40 N•m (354 lb•in)	M12
2	Output Power Terminal Block (3) U/T1, V/T2, W/T3	Motor connections	300 mm^2 (600 MCM)	2.1 mm^2 (14 AWG)	40 N•m (354 lb•in)	M12
3	SHLD Terminal, PE, Motor Ground (3)	Terminating point for wiring shields	300 mm^2 (600 MCM)	2.1 mm^2 (14 AWG)	40 N•m (354 lb•in)	M10
4	DC Bus (3) (3 Terminals; DC–, DC+)	DC input or external brake	300 mm^2 (600 MCM)	2.1 mm^2 (14 AWG)	40 N•m (354 lb•in)	M12

(1) Maximum/minimum sizes that the terminal block will accept - these are not recommendations.
(2) Do Not exceed maximum wire size. Parallel connections may be required.
(3) These connections are bus bar type terminations and require the use of lug type connectors.
(4) Apply counter torque to the nut on the other side of terminations when tightening or loosening the terminal bolt in order to avoid damage to the terminal.

Power Terminal Block Details

Frame 1

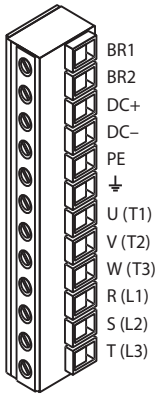

Frame 2

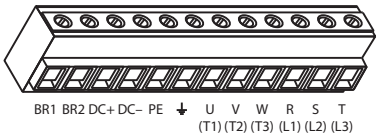

Frames 3 & 4

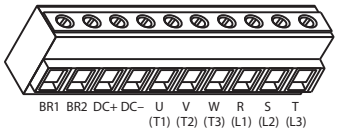

Frame 5 - 75 HP Normal Duty
480V AC Input

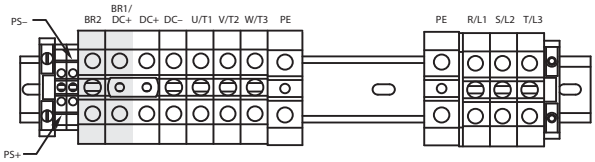

Frame 5 - 100 HP Normal Duty
480V AC Input

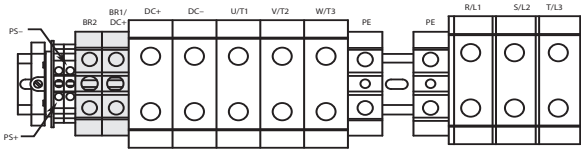

Frame 5 - 75 HP Normal Duty
650V DC Input

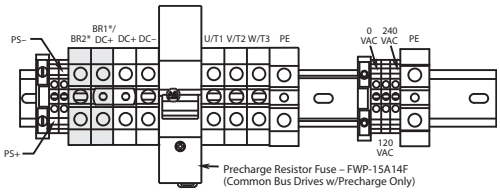

Frame 5 - 100 HP Normal Duty
650V DC Input

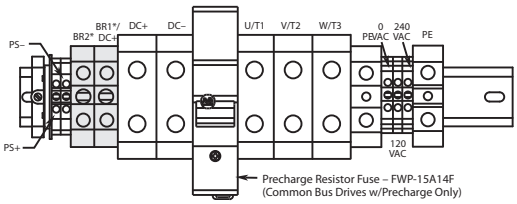

Shaded terminals (BR1 & BR2) will only be present on drives that are ordered with the Brake option.

Power Terminal Block Details, Continued

Frame 6 - 150 HP
Normal Duty
480V AC Input

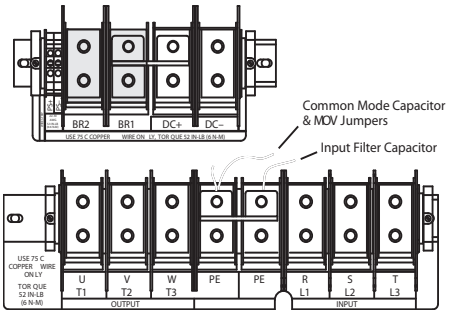

Frame 6 -150 HP
Normal Duty
650V DC Input

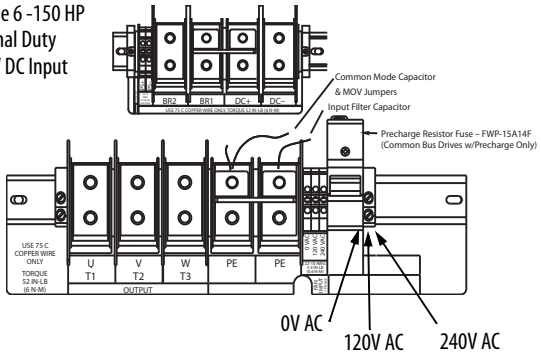

Shaded terminals (BR1 & BR2) will only be present on drives that are ordered with the Brake option.

Frame 9

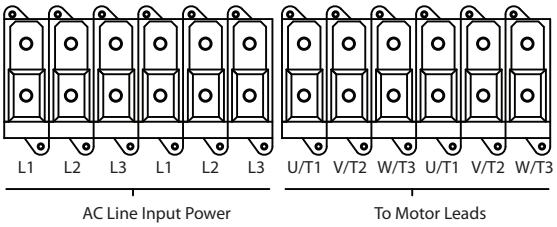

Terminal	Description	Notes
BR1	DC Brake (+)	Dynamic Brake Resistor Connection (+)
BR2	DC Brake (–)	Dynamic Brake Resistor Connection (–)
DC+	DC Bus (+)	DC Input Power or Dynamic Brake Chopper
DC–	DC Bus (–)	DC Input Power or Dynamic Brake Chopper
PE	PE Ground	Not present on 3 Frame drives
⏚	Motor Ground	Not present on 3 Frame drives
PS+	Aux +	(1)
PS-	Aux -	(1)
U	U (T1)	To motor
V	V (T2)	To motor
W	W (T3)	To motor
R	R (L1)	AC Line Input Power
S	S (L2)	AC Line Input Power
T	T (L3)	AC Line Input Power

(1) External control power: UL Installation - 300V DC, ±10%, Non UL Installation - 270-600V DC, ±10%. Frame 1…3, 40 W, 165 mA, Frame 5, 80 W, 90 mA

Control Terminal Block Specifications

TB1 Terminals

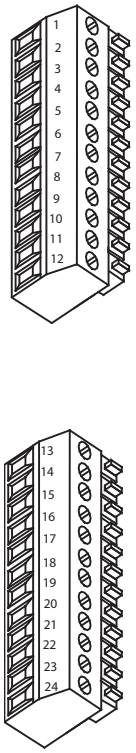

Terminal	Signal	Factory Default	Description	Related Parameter
1	Analog Input 1 Comm.	(Volt)	Bipolar, differential input, +/-10V, 0…20 mA, 13 bit + sign 20k Ohm impedance at Volt; 500 Ohm impedance at mA (1)	
2	Analog Input 1 (+/-)			800
3	Shield	—	Analog Input Shield	
4	Analog Input 2 Comm.	(Volt)	Bipolar, differential input, +/-10V, 0…20 mA, 13 bit + sign 20k Ohm impedance at Volt; 500 Ohm impedance at mA (1)	
5	Analog Input 2 (+/-)			806
6	Analog Input 3 [NTC-] Comm.	(Volt)	Differential input, 0…10V, 10 bit (for motor control mode FOC2, this is the temperature adaptation input). (1)	
7	Analog Input 3 [NTC+]			812
8	Shield	—	Analog Output Shield	
9	Analog Output 1 (-)	(Volt)	Bipolar, differential output, +/-10V, 0…20 mA, 11 bit + sign 2k Ohm minimum load	832, 833
10	Analog Output 1 (+)			
11	Analog Output 2 (-)	(Volt)		839, 840
12	Analog Output 2 (+)			
13	+10V Reference	—	Rating: 20 mA maximum load (Recommend 5k Ohm pot)	
14	Reference Common	—		
15	-10V Reference	—		
16	Encoder A	—	Normal current draw per channel: 20 mA	230…234
17	Encoder A (Not)	—		
18	Encoder B	—		
19	Encoder B (Not)	—		
20	Encoder Z	—		
21	Encoder Z (Not)	—		
22	Encoder Reference (+)	—	12V or 5V DC power supply for primary encoder interface Rating: 300 mA maximum	
23	Encoder Reference (-)	—		
24	Encoder Shield	—	Connection point for encoder shield	

(1) The Analog inputs are not isolated. However, the analog inputs can be connected in series when using current mode. Note that at 20 mA the voltage source must be capable of providing 10V DC at the drive terminals for one drive - - 20V DC is required for two drives and 30V DC is required for three drives, and so on.

TB2 Terminals

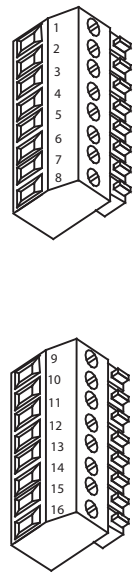

Terminal	Signal	Factory Default	Description	Related Parameter
1	24V DC Common (-)	—	Drive supplied 24V DC logic input power Rating: 300 mA maximum load	
2	24V DC Source (+)	—		
3	Digital Output 1		24V DC Open Collector (sinking logic) Rating: Internal Source = 150 mA Max External Source = 750 mA	846, 847
4	Digital Output 1/2 Com	—	Common for Digital Output 1 & 2	
5	Digital Output 2		24V DC Open Collector (sinking logic) Rating: Internal Source = 150 mA Max External Source = 750 mA	851, 852
6	Relay Output 3 (NC)		Relay contact output Rating: 115V AC or 24V DC = 2 A Max Inductive/Resistive	856, 857
7	Relay Output 3 Com	—		
8	Relay Output 3 (NO)			
9	Digital Input 1-3 Com	—	Common for Digital Inputs 1-3	
10	Digital Input 1		High speed 12V or 24V DC(1) sinking Load:15 mA at 24V DC	825
11	Digital Input 2			826
12	Digital Input 3		Load:15 mA at 24V DC sourcing	827
13	Digital Input 4-6 Com	—	Common for Digital Inputs 4-6	
14	Digital Input 4		Load: 10 mA at 24V DC sinking/sourcing Load: 7.5 mA at 115V AC Note: The 115V AC Digital Inputs can withstand 2 milliamps of leakage current without turning on. If an output device has a leakage current greater than 2 milliamps a burden resistor is required. A 68.1K ohm resistor with a 0.5 watt rating should be used to keep the 115V AC output below 2 milliamps.	828
15	Digital Input 5			829
16	Digital Input 6	HW Enable		830

(1) Digital Inputs 1 and 2 are configured for 12V or 24V DC via DIP switches S3-1 and S3-2, respectively. 24V DC is the default setting.

Drive Ratings

Frame Size to AC Input Drive Rating Cross Reference

Frame	208		240		400V		480V		600V		690V	
	ND kW	HD kW	ND HP	HD HP	ND kW	HD kW	ND HP	HD HP	ND HP	HD HP	ND kW	HD kW
1	0.75	0.55	1.0	0.75	0.75	0.55	1	0.75	1	0.75	–	–
	1.5	1.1	2.0	1.5	1.5	1.1	2	1.5	2	1.5	–	–
	2.2	1.5	3.0	2.0	2.2	1.5	3	2	3	2	–	–
	4.0	3.0	5.0	3.0	4.0	3.0	5	3	5	3	–	–
	5.5	4.0	7.5	5.0	5.5	4.0	7.5	5	7.5	5	–	–
	–	–	–	–	7.5	5.5	10	7.5	10	7.5	–	–
	–	–	–	–	11	7.5	15	10	15	10	–	–
2	7.5	5.5	10	7.5	15	11	20	15	20	15	–	–
	–	–			18.5	15	25	20	25	20	–	–
3	11	7.5	15	10	22	18.5	30	25	30	25	–	–
	15	11	20	15	30	22	40	30	40	30	–	–
	–	–	–	–	37	30	50	40	50	40	–	–
4	18.5	15	25	20	45	37	60	50	60	50	–	–
	22	18.5	30	25	–	–	–	–	–	–	–	–
5	30	22	40	30	55	45	75	60	75	60	45	37.5
	37	30	50	40	55	45	100	75	100	75	55	45
	–	–	–	–	–	–	–	–	–	–	75	55
	–	–	–	–	–	–	–	–	–	–	90	75
6	45	37	60	50	75	55	125	100	125	100	110	90
	55	45	75	60	90	75	150	125	150	125	132	110
	66	55	100	75	110	90	200	150	–	–	–	–
	–	–	–	–	132	110	–	–	–	–	–	–
9	–	–	–	–	132	110	200	150	150	150	160	132
	–	–	–	–	160	132	250	200	200	150	200	160
10	–	–	–	–	200	160	300	250	250	200	250	200
	–	–	–	–	250	200	350	300	350	250	315	250
	–	–	–	–	250	250	450	350	400	350	355	315
	–	–	–	–	–	–	–	–	450	350	400	315
11	–	–	–	–	315	250	500	450	500	400	450	355
	–	–	–	–	355	315	500	500	500	500	500	400
	–	–	–	–	400	355	600	500	600	500	560	500
12	–	–	–	–	450	400	700	600	700	650	630	560
	–	–	–	–	500	450	800	700	800	700	710	630
	–	–	–	–	560	500	900	800	900	700	800	630
13	–	–	–	–	630	560	1000	900	1000	900	900	800
	–	–	–	–	710	630	1200	1000	1100	1000	1000	900
	–	–	–	–	800	710	1250	1000	1300	1100	1100	1000
14	–	–	–	–	–	–	–	–	1600	1400	1500	1300

Frame Size to DC Input Drive Rating Cross Reference

Frame	325V		540V		650V		810V		932V	
	ND HP	HD HP	ND kW	HD kW	ND HP	HD HP	ND HP	HD HP	ND kW	HD kW
1	5.0	3.0	1.5	1.1	1.0	0.75	1.0	0.75	–	–
	7.5	5.0	2.2	1.5	2.0	1.5	2.0	1.5	–	–
	–	–	4.0	3.0	3.0	2.0	3.0	2.0	–	–
	–	–	5.5	4.0	5.0	3.0	5.0	3.0	–	–
	–	–	7.5	5.5	7.5	5.0	7.5	5.0	–	–
	–	–	11.0	7.5	10.0	7.5	10.0	7.5	–	–
	–	–	–	–	15	10	15	10	–	–
2	10	7.5	15	11	20	15	20	15	–	–
	–	–	18.5	15	25	20	25	20	–	–
3	15	10	22	18.5	30	25	30	25	–	–
	20	15	20	22	40	30	40	30	–	–
	–	–	37	30	50	40	50	40	–	–
4	25	20	45	37	60	50	60	50	–	–
	30	25	–	–	–	–	–	–	–	–
5	40	30	55	45	75	60	100	75	90	75
	50	40	55	45	100	75	–	–	–	–
	–	–	75	55	–	–	–	–	–	–
6	60	50	90	75	125	100	150	125	132	110
	75	60	110	90	150	125	–	–	–	–
	100	75	132	110	200	150	–	–	–	–
9	–	–	132	110	200	150	150	150	160	132
	–	–	160	132	250	200	200	150	200	160
10	–	–	200	160	300	250	250	200	250	200
	–	–	250	200	350	300	350	250	315	250
	–	–	250	250	450	350	400	350	355	315
	–	–	–	–	–	–	450	350	400	315
11	–	–	315	250	500	450	500	400	450	355
	–	–	355	315	500	500	500	500	500	400
	–	–	400	355	600	500	600	500	560	500
12	–	–	450	400	700	600	700	650	630	560
	–	–	500	450	800	700	800	700	710	630
	–	–	560	500	900	800	900	700	800	630
13	–	–	630	560	1000	900	1000	900	1000	900
	–	–	710	630	1200	1000	1100	1000	1100	1000
	–	–	800	710	1250	1000	1300	1100	1300	1100
14	–	–	–	–	–	–	1600	1400	1500	1300

Drive Power Ratings

The tables on the following pages provide drive ratings (including continuous, 1 minute and 3 seconds), PWM frequency ratings, ambient operating temperatures, and watts loss information.

208 Volt AC Input Frames 1…6 Drive Ratings

Drive Catalog Number	Frame	kW Rating		PWM Freq.	Temp.(1)	Input Ratings		Output Amps			Watts Loss
		ND	HD	kHz	°C	Amps	kVA	Cont.	1 Min	3 Sec.	
20DB4P2	1	0.75	0.55	4	50	3.7	1.3	4.8	5.6	7.0	101
20DB6P8	1	1.5	1.1	4	50	6.8	2.4	7.8	10.4	13.8	118
20DB9P6	1	2.2	1.5	4	50	9.5	3.4	11	12.1	17	140
20DB015	1	4.0	3.0	4	50	15.7	5.7	17.5	19.3	26.3	225
20DB022	1	5.5	4.0	4	50	23.0	8.3	25.3	27.8	38	257
20DB028	2	7.5	5.5	4	50	29.6	10.7	32.2	38	50.6	322
20DB042	3	11	7.5	4	50	44.5	16.0	48.3	53.1	72.5	431
20DB052	3	15	11	4	50	51.5	18.6	56	64	86	509
20DB070	4	18.5	15	4	50	72	25.9	78.2	93.1	124.2	776
20DB080	4	22	18.5	4	50	84.7	30.5	92	117.3	156.4	960
20DB104	5	30	–	4	50	113	40.7	120	132	175	1065
		–	22	4	50	84.7	30.5	92	138	175	1065
20DB130	5	37	–	4	50	141	44.1	130	143	175	1320
		–	30	4	50	113	35.3	104	156	175	1320
20DB154	6	45	–	4	50	167	60.1	177	195	266	1546
		–	37	4	50	141	50.9	150	225	300	1546
20DB192	6	55	–	4	50	208	75.0	221	243	308	2043
		–	45	4	50	167	60.1	177	266	308	2043
20DB260	6	66	–	2	45	255	96.7	260	286	390	2305
		–	55	2	50	199	71.7	205	305	410	2305

(1) The temperature rating that is listed for frame size 1…4 drives is for NEMA/UL open types only. The adhesive tape label must be removed in order to operate at this temperature, otherwise the ambient operating temperature of these drives is 40 °C.

240 Volt AC Input Frames 1…6 Drive Ratings

Drive Catalog Number	Frame	HP Rating		PWM Freq.	Temp.(1)	Input Ratings		Output Amps			Watts Loss
		ND	HD	kHz	°C	Amps	kVA	Cont.	1 Min	3 Sec.	
20DB4P2	1	1	0.75	4	50	3.3	1.4	4.2	4.8	6.4	101
20DB6P8	1	2	1.5	4	50	5.9	2.4	6.8	9	12	118
20DB9P6	1	3	2	4	50	8.3	3.4	9.6	10.6	14.4	140
20DB015	1	5	3	4	50	13.7	5.7	15.3	16.8	23	225
20DB022	1	7.5	5	4	50	19.9	8.3	22	24.2	33	257
20DB028	2	10	7.5	4	50	25.7	10.7	28	33	44	322
20DB042	3	15	10	4	50	38.5	16.0	42	46.2	63	431
20DB052	3	20	15	4	50	47.7	19.8	52	63	80	509
20DB070	4	25	20	4	50	64.2	26.7	70	78	105	776
20DB080	4	30	25	4	50	73.2	30.5	80	105	140	960
20DB104	5	40	–	4	50	98	40.6	104	115	175	1065
		–	30	4	50	73	30.5	80	120	160	1065
20DB130	5	50	–	4	50	122	50.7	130	143	175	1320
		–	40	4	50	98	40.6	104	156	175	1320
20DB154	6	60	–	4	50	145	60.1	154	169	231	1546
		–	50	4	50	122	50.7	130	195	260	1546

240 Volt AC Input Frames 1…6 Drive Ratings (continued)

Drive Catalog Number	Frame	HP Rating		PWM Freq.	Temp.(1)	Input Ratings		Output Amps			Watts Loss
		ND	HD	kHz	°C	Amps	kVA	Cont.	1 Min	3 Sec.	
20DB192	6	75	–	4	50	180	74.9	192	211	288	2043
		–	60	4	50	145	60.1	154	231	308	2043
20DB260	6	100	–	2	45	233	96.8	260	286	390	2305
		–	75	2	50	169	74.9	205	305	410	2305

(1) The temperature rating that is listed for frame size 1…4 drives is for NEMA/UL open types only. The adhesive tape label must be removed in order to operate at this temperature, otherwise the ambient operating temperature of these drives is 40 °C.

400 Volt AC Input Frames 1…6 Drive Ratings

Drive Catalog Number	Frame	kW Rating		PWM Freq.	Temp.(3)	Input Ratings		Output Amps			Watts Loss
		ND	HD	kHz	°C	Amps	kVA	Cont.	1 Min	3 Sec.	
20DC2P1	1	0.75	0.55	4	50	1.8	1.3	2.1	2.4	3.2	103
20DC3P5	1	1.5	1.1	4	50	3.2	2.2	3.5	4.5	6.0	117
20DC5P0	1	2.2	1.5	4	50	4.6	3.2	5.0	5.5	7.5	135
20DC8P7	1	4	3.0	4	50	7.9	5.5	8.7	9.9	13.2	210
20DC011	1	5.5	4	4	50	10.8	7.5	11.5	13	17.4	243
20DC015	1	7.5	5.5	4	50	14.4	10.0	15.4	17.2	23.1	271
20DC022	1	11	7.5	4	50	20.6	14.3	22	24.2	33	389
20DC030	2	15	11	4	50	28.4	19.7	30	33	45	467
20DC037	2	18.5	15	4	50	35.0	24.3	37	45	60	519
20DC043	3	22	18.5	4	50	40.7	28.2	43	56	74	543
20DC056	3	30	22	4	50	53	36.7	56	64	86	708
20DC072	3	37	30	4	45	68.9	47.8	72	84	112	767
20DC085 (1)	4	45	–	4	50	81.4	56.4	85	94	128	908
		–	37	4	50	68.9	47.8	72	108	144	908
20DC105	5	55	–	4	50(4)	100.5	69.6	105	116	158	1157
		–	45	4	50(4)	81.4	56.4	85	128	170	1157
20DC125	5	55	–	4	50(4)	121.1	83.9	125	138	163	1157
		–	45	4	50(4)	101	63.7	96	144	168	1157
20DC140	5	75	–	4	50(4)	135.6	94	140	154	210	1529
		–	55	4	50(4)	121	69.6	105	158	210	1529
20DC170	6	90	–	4	50(4)	164.6	114	170	187	255	1895
		–	75	4	50(4)	136	94	140	210	280	1895
20DC205 (2)	6	110	–	4	40(4)	198.5	138	205	220	289	2254
		–	90	4	40(4)	164	114	170	255	313	2254
20DC260	6	132	–	2	40(4)	254.7	166	260	286	390	2553
		–	110	2	40(4)	199	138	205	308	410	2553

(1) 20DC085 current rating is limited to 45° C ambient.
(2) 20DC205 current rating is limited to 40° C ambient.
(3) The temperature rating that is listed for frame size 1…4 drives is for NEMA/UL open types only. The adhesive tape label must be removed in order to operate at this temperature, otherwise the ambient operating temperature of these drives is 40 °C.
(4) UL Type 12/IP54 (flange mount) heatsink ambient temperature rating is 40° C/ambient of unprotected drive portion (inside enclosure) is 55° C. The ambient temperature for the UL Type 12/IP54 standalone drives is 40° C.

400 Volt AC Input Frames 9…13 Drive Ratings

Drive Catalog Number	Frame	kW Rating		PWM Freq.	Temp. (1)	Input Ratings	Output Amps			Watts Loss
		ND	HD	kHz	°C	Amps	Cont.	1 Min	3 Sec.	
20DC261	9	132	-	2	40	263	261	287	410	2700
		-	110	2	40	207	205	308	410	2700
20DC300	9	160	-	2	40	302	300	330	450	3100
		-	132	2	40	247	245	368	490	3100
20DC385	10	200	-	2	40	388	385	424	600	4320
		-	160	2	40	302	300	450	600	4320
20DC460	10	250	-	2	40	463	460	506	770	5335
		-	200	2	40	388	385	578	770	5335
20DC500	10	250	-	2	40	504	500	550	750	5921
		-	250	2	40	423	420	630	840	5921
20DC590	11	315	-	2	40	594	590	649	956	6620
		-	250	2	40	524	520	780	956	6620
20DC650	11	355	-	2	40	655	650	715	1062	7538
		-	315	2	40	594	590	885	1062	7538
20DC730	11	400	-	2	40	735	730	803	1095	8312
		-	355	2	40	655	650	975	1170	8312
20DC820	12	450	-	2	40	826	820	902	1230	9201
		-	400	2	40	735	730	1095	1314	9201
20DC920	12	500	-	2	40	927	920	1012	1380	10670
		-	450	2	40	826	820	1230	1476	10670
20DC1K0	12	560	-	2	40	1038	1030	1133	1555	11729
		-	500	2	35	927	920	1370	1600	11729
20DC1K1	13	630	-	2	40	1158	1150	1265	1620	13801
		-	560	2	40	1038	1030	1545	1620	13801
20DC1K3	13	710	-	2	40	1310	1300	1430	2079	15077
		-	630	2	40	1158	1150	1725	2079	15077
20DC1K4	13	800	-	2	40	1461	1450	1595	2175	16511
		-	710	2	40	1209	1200	1800	2400	16511

(1) Maximum air temperature surrounding the drive module.

480 Volt AC Input Frames 1…6 Drive Ratings

Drive Catalog Number	Frame	HP Rating		PWM Freq.	Temp.(1)	Input Ratings		Output Amps			Watts Loss
		ND	HD	kHz	°C	Amps	kVA	Cont.	1 Min	3 Sec.	
20DD2P1	1	1	0.75	4	50	1.6	1.4	2.1	2.4	3.2	103
20DD3P4	1	2	1.5	4	50	2.6	2.2	3.4	4.5	6.0	117
20DD5P0	1	3	2	4	50	3.9	3.2	5.0	5.5	7.5	135
20DD8P0	1	5	3	4	50	6.9	5.7	8.0	8.8	12	210
20DD011	1	7.5	5	4	50	9.5	7.9	11	12.1	16.5	243
20DD014	1	10	7.5	4	50	12.5	10.4	14	16.5	22	271
20DD022	1	15	10	4	50	19.9	16.6	22	24.2	33	389
20DD027	2	20	15	4	50	24.8	20.6	27	33	44	467
20DD034	2	25	20	4	50	31.2	25.9	34	40.5	54	519
20DD040	3	30	25	4	50	36.7	30.5	40	51	68	543
20DD052	3	40	30	4	50	47.7	39.7	52	60	80	708
20DD065	3	50	40	4	50	59.6	49.6	65	78	104	767
20DD077	4	60	–	4	50	72.3	60.1	77	85	116	980
		–	50	4	50	59.6	49.6	65	98	130	980

480 Volt AC Input Frames 1…6 Drive Ratings (continued)

Drive Catalog Number	Frame	HP Rating		PWM Freq.	Temp.(1)	Input Ratings		Output Amps			Watts Loss
		ND	HD	kHz	°C	Amps	kVA	Cont.	1 Min	3 Sec.	
20DD096	5	75	–	4	50(2)	90.1	74.9	96	106	144	1157
		–	60	4	50(2)	72.3	60.1	77	116	154	1157
20DD125	5	100	–	4	50(2)	117	97.6	125	138	163	1529
		–	75	4	50(2)	90.1	74.9	96	144	168	1529
20DD156	6	125	–	4	50(2)	146.5	121.7	156	172	234	1895
		–	100	4	50(2)	131	97.6	125	188	250	1895
20DD180	6	150	–	4	50(2)	169	140.5	180	198	270	2254
		–	125	4	50(2)	147	121.7	156	234	312	2254
20DD248	6	200		2	40(2)	232.8	188	248	273	372	2553
			150	2	40(2)	169	140.5	180	270	360	2553

(1) The temperature rating that is listed for frame size 1…4 drives is for NEMA/UL open types only. The adhesive tape label must be removed in order to operate at this temperature, otherwise the ambient operating temperature of these drives is 40 °C.

(2) UL Type 12/IP54 (flange mount) heatsink ambient temperature rating is 40° C/ambient of unprotected drive portion (inside enclosure) is 55° C. The ambient temperature for the UL Type 12/IP54 standalone drives is 40° C.

480 Volt AC Input Frames 9…13 Drive Ratings

Drive Catalog Number	Frame	HP Rating		PWM Freq.	Temp. (1)	Input Ratings	Output Amps			Watts Loss
		ND	HD	kHz	°C	Amps	Cont.	1 Min	3 Sec.	
20DD261	9	200	-	2	40	252	261	287	410	2700
		-	150	2	40	207	205	308	410	2700
20DD300	9	250	-	2	40	290	300	330	450	3100
		-	200	2	40	247	245	368	490	3100
20DD385	10	300	-	2	40	372	385	424	600	4320
		-	250	2	40	302	300	450	600	4320
20DD460	10	350	-	2	40	444	460	506	770	5335
		-	300	2	40	388	385	578	770	5335
20DD500	10	450	-	2	40	483	500	550	750	5921
		-	350	2	40	423	420	630	840	5921
20DD590	11	500	-	2	40	570	590	649	956	6620
		-	450	2	40	524	520	780	956	6620
20DD650	11	500	-	2	40	628	650	715	1062	7538
		-	500	2	40	594	590	885	1062	7538
20DD730	11	600	-	2	40	705	730	803	1095	8312
		-	500	2	40	655	650	975	1170	8312
20DD820	12	700	-	2	40	792	820	902	1230	9201
		-	600	2	40	735	730	1095	1314	9201
20DD920	12	800	-	2	40	888	920	1012	1380	10670
		-	700	2	40	826	820	1230	1476	10670
20DD1K0	12	900	-	2	40	994	1030	1133	1555	11729
		-	800	2	35	927	920	1370	1600	11729
20DD1K1	13	1000	-	2	40	1110	1150	1265	1620	13801
		-	900	2	40	994	1030	1545	1620	13801
20DD1K3	13	1200	-	2	40	1255	1300	1430	2079	15077
		-	1000	2	40	1110	1150	1725	2079	15077
20DD1K4	13	1250	-	2	40	1400	1450	1595	2175	16511
		-	1000	2	40	1158	1200	1800	2400	16511

(1) Maximum air temperature surrounding the drive module.

600 Volt AC Input Frames 1…6 Drive Ratings

Drive Catalog Number	Frame	HP Rating		PWM Freq.	Temp.(1)	Input Ratings		Output Amps			Watts Loss
		ND	HD	kHz	°C	Amps	kVA	Cont.	1 Min	3 Sec.	
20DE1P7	1	1	0.75	4	50	1.3	1.4	1.7	2	2.6	94
20DE2P7	1	2	1.5	4	50	2.1	2.1	2.7	3.6	4.8	106
20DE3P9	1	3	2	4	50	3.0	3.1	3.9	4.3	5.9	125
20DE6P1	1	5	3	4	50	5.3	5.5	6.1	6.7	9.2	188
20DE9P0	1	7.5	5	4	50	7.8	8.1	9	9.9	13.5	206
20DE011	1	10	7.5	4	50	9.9	10.2	11	13.5	18	239
20DE017	1	15	10	4	50	15.4	16.0	17	18.7	25.5	333
20DE022	2	20	15	4	50	20.2	21.0	22	25.5	34	416
20DE027	2	25	20	4	50	24.8	25.7	27	33	44	463
20DE032	3	30	25	4	50	29.4	30.5	32	40.5	54	503
20DE041	3	40	30	4	50	37.6	39.1	41	48	64	667
20DE052	3	50	40	4	50	47.7	49.6	52	61.5	82	760
20DE062	4	60	50	2	45	58.2	60.5	62	78	104	875
20DE077	5	75	–	2	45	72.3	75.1	77	85	116	1411
		–	60	2	50(2)	58.2	60.5	63	94	126	1411
20DE099	5	100	–	2	50(2)	92.9	96.6	99	109	126	1924
		–	75	2	50(2)	72.3	75.1	77	116	138	1924
20DE125	6	125	–	2	50(2)	117	121.6	125	138	188	1950
		–	100	2	50(2)	93	96.6	99	149	198	1950
20DE144	6	150	–	2	50(2)	135	140.5	144	158	216	2330
		–	125	2	40(2)	117	121.6	125	188	250	2330

(1) The temperature rating that is listed for frame size 1…4 drives is for NEMA/UL open types only. The adhesive tape label must be removed in order to operate at this temperature, otherwise the ambient operating temperature of these drives is 40 °C.

(2) UL Type 12/IP54 (flange mount) heatsink ambient temperature rating is 40 °C ambient of unprotected drive portion (inside enclosure) is 55° C. The ambient temperature for the UL Type 12/IP54 standalone drives is 40°C.

600 Volt AC Input Frames 9…14 Drive Ratings

Drive Catalog Number	Frame	HP Rating		PWM Freq.	Temp. (2)	Input Ratings	Output Amps			Watts Loss
		ND	HD	kHz	°C	Amps	Cont.	1 Min	3 Sec.	
20DE170	9	150	–	2	40	164	170	187	245	3493
		–	150	2	40	139	144	216	245	3493
20DE208	9	200	–	2	35	201	208	230	289	3802
		–	150	2	40	164	170	250	289	3802
20DE261	10	250	–	2	40	252	261	287	375	4206
		–	200	2	40	201	208	312	375	4206
20DE325	10	350	–	2	40	314	325	358	470	4751
		–	250	2	40	252	261	392	470	4751
20DE385	10	400	–	2	40	372	385	424	585	5527
		–	350	2	40	314	325	488	585	5527
20DE416	10	450	–	2	35	402	416	458	585	5622
		–	350	2	40	314	325	488	585	5622
20DE460	11	500	–	2	40	444	460	506	693	6345
		–	400	2	40	372	385	578	693	6345
20DE502	11	500	–	2	40	485	502	552	828	6925
		–	500	2	40	444	460	690	828	6925
20DE590	11	600	–	2	35	570	590	649	885	7539
		–	500	2	35	485	502	753	904	7539
20DE650	12	700	–	2	40	628	650	715	1062	9502
		–	650	2	40	570	590	885	1062	9502

600 Volt AC Input Frames 9…14 Drive Ratings (continued)

Drive Catalog Number	Frame	HP Rating		PWM Freq.	Temp. (2)	Input Ratings	Output Amps			Watts Loss
		ND	HD	kHz	°C	Amps	Cont.	1 Min	3 Sec.	
20DE750	12	800	–	2	40	724	750	825	1170	10570
		–	700	2	40	628	650	975	1170	10570
20DE820(1)	12	900	–	2	35	792	820	902	1170	11082
		–	700	2	35	628	650	975	1170	11082
20DE920	13	1000	–	2	40	888	920	1012	1380	12690
		–	900	2	40	792	820	1230	1410	12690
20DE1K0	13	1100	–	2	40	994	1030	1133	1545	15907
		–	1000	2	40	888	920	1380	1755	15907
20DE1K1	13	1300	–	2	35	1139	1180	1298	1755	17306
		–	1100	2	35	994	1030	1463	1755	17306
20DE1K5	14	1600	–	2	40	1448	1500	1650	2250	22500
		–	1400	2	40	1255	1300	1950	2340	22500

(1) 20DE820 drives (ND) are only capable of producing 95% of starting torque under 10 Hz.
(2) Maximum air temperature surrounding the drive module.

690 Volt AC Input Frames 5 & 6 Drive Ratings

Drive Catalog Number	Frame	kW Rating		PWM Freq.	Temp.(1)	Input Ratings		Output Amps			Watts Loss
		ND	HD	kHz	°C	Amps	kVA	Cont.	1 Min	3 Sec.	
20DF052	5	45	–	4	50	46.9	59.5	52	57	78	1084
		–	37.5	4	50	40.1	48.0	46	69	92	1084
20DF060	5	55	–	4	50	57.7	68.9	60	66	90	1300
		–	45	4	50	46.9	59.5	52	78	104	1300
20DF082	5	75	–	2	50	79.0	94.4	82	90	123	1462
		–	55	2	50	57.7	68.9	60	90	120	1462
20DF098	5	90	–	2	40	94.7	113	98	108	127	1846
		–	75	2	40	79.0	94.4	82	123	140	1846
20DF119	6	110	–	2	50	115	138	119	131	179	1832
		–	90	2	50	92.9	113	98	147	196	1832
20DF142	6	132	–	2	50	139	165.9	142	156	213	2253
		–	110	2	40	115	137	119	179	238	2253

(1) UL Type 12/IP54 (flange mount) heatsink ambient temperature rating is 40 °C ambient of unprotected drive portion (inside enclosure) is 55° C. The ambient temperature for the UL Type 12/IP54 standalone drives is 40° C.

690 Volt AC Input Frames 9…14 Drive Ratings

Drive Catalog Number	Frame	kW Rating		PWM Freq.	Temp. (2)	Input Ratings	Output Amps			Watts Loss
		ND	HD	kHz	°C	Amps	Cont.	1 Min	3 Sec.	
20DF170	9	160	–	2	40	171	170	187	245	3113
		–	132	2	40	145	144	216	245	3113
20DF208	9	200	–	2	35	210	208	230	289	3594
		–	160	2	40	171	170	250	289	3594
20DF261	10	250	–	2	40	263	261	287	375	4206
		–	200	2	40	210	208	312	375	4206
20DF325	10	315	–	2	40	327	325	358	470	4751
		–	250	2	40	263	261	392	470	4751
20DF385	10	355	–	2	40	388	385	424	585	5527
		–	315	2	40	327	325	488	585	5527
20DF416	10	400	–	2	35	419	416	458	585	5622
		–	315	2	40	327	325	488	585	5622
20DF460	11	450	–	2	40	463	460	506	693	6345
		–	355	2	40	388	385	578	693	6345
20DF502	11	500	–	2	40	506	502	552	828	6925
		–	400	2	40	463	460	690	828	6925
20DF590	11	560	–	2	35	594	590	649	885	7539
		–	500	2	35	506	502	753	904	7539
20DF650	12	630	–	2	40	655	650	715	1062	9502
		–	560	2	40	594	590	885	1062	9502
20DF750	12	710	–	2	40	756	750	825	1170	10570
		–	630	2	40	655	650	975	1170	10570
20DF820(1)	12	800	–	2	35	826	820	902	1170	11082
		–	630	2	35	655	650	975	1170	11082
20DF920	13	900	–	2	40	927	920	1012	1380	12690
		–	800	2	40	826	820	1230	1410	12690
20DF1K0	13	1000	–	2	40	1038	1030	1133	1545	15907
		–	900	2	40	927	920	1380	1755	15907
20DF1K1	13	1100	–	2	35	1189	1180	1298	1755	17306
		–	1000	2	35	1038	1030	1463	1755	17306
20DF1K5	14	1500	–	2	40	1511	1500	1650	2250	22500
		–	1300	2	40	1310	1300	1950	2340	22500

(1) 20DF820 drives (ND) are only capable of producing 95% of starting torque under 10 Hz.
(2) Maximum air temperature surrounding the drive module.

325 Volt DC Input Frames 1…6 Drive Ratings

Drive Catalog Number	Frame	HP Rating		PWM Freq.	Temp.(3)	DC Input Ratings	Output Amps(4)			Watts Loss
		ND	HD	kHz	°C	Amps	Cont.	1 Min	3 Sec.	
20DB015	1	5	3	4	45	16	15.3	16.8	23.0	200
20DB022	1	7.5	5	4	45	23.3	22	24.2	33	218
20DB028	2	10	7.5	4	45	30	28	33	44	267
20DB042	3	15	10	4	45	45	42	46.2	63	359
20DB052	3	20	15	4	45	55	52	63	80	414
20DB070	4	25	20	4	45	75.3	70	78	105	629
20DB080	4	30	25	4	45	85.8	80	105	140	777
20DN104(1)	5	40	30	4	45	114.1	104 (80)	115 (120)	175 (160)	855
20DN130(1)	5	50	40	4	45	142.6	130 (104)	143 (156)	175 (175)	1041
20DN154(1)	6	60	50	4	45	169	154 (130)	169 (195)	231 (260)	1260
20DN192(1)	6	75	60	4	45	210.6	192 (154)	211 (231)	288 (308)	1671
20DN260(1)(2)	6	100	75	4	50	272.1	260 (205)	286 (305)	390 (410)	1867

(1) Catalog number corresponds to output amps for these drives. Drive must be programmed to lower voltage to obtain higher currents that are shown at right.
(2) Catalog number corresponds to drives with precharge only.
(3) The temperature rating that is listed for frame size 1…4 drives is for NEMA/UL open types only. The adhesive tape label must be removed in order to operate at this temperature, otherwise the ambient operating temperature of these drives is 40 °C.
(4) Frame 5 and 6 drives have dual current ratings; one for normal duty applications, and one for heavy-duty applications (in parentheses). The drive may be operated at either rating.

540 Volt DC Input Frames 1…6 Drive Ratings

Drive Catalog Number	Frame	kW Rating		PWM Freq.	Temp.(2)	DC Input Ratings	Output Amps			Watts Loss
		ND	HD	kHz	°C	Amps	Cont.	1 Min	3 Sec.	
20DC3P5	1	1.5	1.1	4	50	3.7	3.5	4.5	6.0	112
20DC5P0	1	2.2	1.5	4	50	5.3	5.0	5.5	7.5	128
20DC8P7	1	4	3.0	4	50	9.3	8.7	9.9	13.2	198
20DC011	1	5.5	4	4	50	12.6	11.5	13	17.4	225
20DC015	1	7.5	5.5	4	50	16.8	15.4	17.2	23.1	247
20DC022	1	11	7.5	4	50	24	22	24.2	33	347
20DC030	2	15	11	4	50	33.2	30	33	45	412
20DC037	2	18.5	15	4	50	40.9	37	45	60	460
20DC043	3	22	18.5	4	50	47.5	43	56	74	478
20DC056	3	30	22	4	50	61.9	56	64	86	621
20DC072	3	37	30	4	50	80.5	72	84	112	652
20DC085	4	45	37	4	50	95.1	85	108	144	814
20DH105 (1)	5	55	–	4	50	120.2	105	116	158	967
		–	45	4	50	95.1	85	128	170	967
20DH125 (1)	5	55	–	4	50	120.2	125	138	163	891
		–	45	4	50	95.1	96	144	168	891
20DH140	5	75	–	4	50	159	140	154	210	1263
		–	55	4	50	120.2	105	158	210	1263
20DH170 (1)	6	90	–	4	50	192	170	187	255	1605
		–	75	4	50	159	140	210	280	1605
20DH205 (1)	6	110	–	4	40	226	205	220	289	1908
		–	90	4	40	192	170	255	313	1908
20DH260 (1)	6	132	–	2	40	298	260	286	390	2115
		–	110	2	40	226	205	305	410	2115

(1) Also applies to "P" voltage class. Fuses must be applied in the (+) leg and (-) leg of the DC Common Bus.
(2) The temperature rating that is listed for frame size 1…4 drives is for NEMA/UL open types only. The adhesive tape label must be removed in order to operate at this temperature, otherwise the ambient operating temperature of these drives is 40 °C.

540 Volt DC Input Frames 9…13 Drive Ratings

Drive Catalog Number	Frame	kW Rating		PWM Freq.	Temp. (1)	DC Input Ratings	Output Amps			Watts Loss
		ND	HD	kHz	°C	Amps	Cont.	1 Min	3 Sec.	
20DH261	9	132	-	2	40	307	261	287	410	1890
		-	110	2	40	241	205	308	410	1890
20DH300	9	160	-	2	40	353	300	330	450	2170
		-	132	2	40	288	245	368	490	2170
20DH385	10	200	-	2	40	453	385	424	600	3240
		-	160	2	40	353	300	450	600	3240
20DH460	10	250	-	2	40	541	460	506	770	4001
		-	200	2	40	453	385	578	770	4001
20DH500	10	250	-	2	40	589	500	550	750	4441
		-	250	2	40	494	420	630	840	4441
20DH590	11	315	-	2	40	695	590	649	956	4700
		-	250	2	40	612	520	780	956	4700
20DH650	11	355	-	2	40	765	650	715	1062	5352
		-	315	2	40	695	590	885	1062	5352
20DH730	11	400	-	2	40	859	730	803	1095	5902
		-	355	2	40	765	650	975	1170	5902
20DH820	12	450	-	2	40	965	820	902	1230	6901
		-	400	2	40	859	730	1095	1314	6901
20DH920	12	500	-	2	40	1083	920	1012	1380	8003
		-	450	2	40	965	820	1230	1476	8003
20DH1K0	12	560	-	2	40	1213	1030	1133	1555	8797
		-	500	2	35	1083	920	1370	1600	8797
20DH1K1	13	630	-	2	40	1354	1150	1265	1620	10627
		-	560	2	40	1213	1030	1545	1620	10627
20DH1K3	13	710	-	2	40	1530	1300	1430	2079	11609
		-	630	2	40	1354	1150	1725	2079	11609
20DH1K4	13	800	-	2	40	1707	1450	1595	2175	12713
		-	710	2	40	1413	1200	1800	2400	12713

(1) Maximum air temperature surrounding the drive module.

650 Volt DC Input Frames 1…6 Drive Ratings

Drive Catalog Number	Frame	HP Rating		PWM	Temp.(2)	DC Input Ratings	Output Amps			Watts Loss
		ND	HD	kHz	°C	Amps	Cont.	1 Min	3 Sec.	
20DD2P1	1	1	0.75	4	50	1.9	2.1	2.4	3.2	100
20DD3P4	1	2	1.5	4	50	3.0	3.4	4.5	6.0	112
20DD5P0	1	3	2	4	50	4.5	5.0	5.5	7.5	128
20DD8P0	1	5	3	4	50	8.1	8.0	8.8	12	198
20DD011	1	7.5	5	4	50	11.1	11	12.1	16.5	225
20DD014	1	10	7.5	4	50	14.6	14	16.5	22	247
20DD022	1	15	10	4	50	23.3	22	24.2	33	347
20DD027	2	20	15	4	50	28.9	27	33	44	412
20DD034	2	25	20	4	50	36.4	34	40.5	54	460
20DD040	3	30	25	4	50	42.9	40	51	68	478
20DD052	3	40	30	4	50	55.7	52	60	80	621
20DD065	3	50	40	4	50	69.6	65	78	104	652
20DD077	4	60	50	4	50	84.5	77	97.5	130	814
20DJ096 (1)	5	75	–	4	50	105.3	96	106	144	967
		–	60	4	50	84.5	77	116	154	967

650 Volt DC Input Frames 1…6 Drive Ratings (continued)

Drive Catalog Number	Frame	HP Rating		PWM	Temp.(2)	DC Input Ratings	Output Amps			Watts Loss
		ND	HD	kHz	°C	Amps	Cont.	1 Min	3 Sec.	
20DJ125 (1)	5	100	–	4	50	137.1	125	138	163	1263
		–	75	4	50	105.3	96	144	168	1263
20DJ156 (1)	6	125	–	4	50	171	156	172	234	1605
		–	100	4	50	137.1	125	188	250	1605
20DJ180 (1)	6	150	–	4	50	198	180	198	270	1908
		–	125	4	50	171.2	156	234	312	1908
20DJ248 (1)	6	200	–	2	40	272	248	273	372	2115
		–	150	2	40	198	180	270	360	2115

(1) Also applies to "R" voltage class. Fuses must be applied in the (+) leg and (-) leg of the DC Common Bus.
(2) The temperature rating that is listed for frame size 1…4 drives is for NEMA/UL open types only. The adhesive tape label must be removed in order to operate at this temperature, otherwise the ambient operating temperature of these drives is 40 °C.

650 Volt DC Input Frames 9…13 Drive Ratings

Drive Catalog Number	Frame	HP Rating		PWM Freq.	Temp. (1)	DC Input Ratings	Output Amps			Watts Loss
		ND	HD	kHz	°C	Amps	Cont.	1 Min	3 Sec.	
20DJ261	9	200	-	2	40	294	261	287	410	1890
		-	150	2	40	231	205	308	410	1890
20DJ300	9	250	-	2	40	338	300	330	450	2170
		-	200	2	40	294	245	368	490	2170
20DJ385	10	300	-	2	40	434	385	424	600	3240
		-	250	2	40	338	300	450	600	3240
20DJ460	10	350	-	2	40	519	460	506	770	4001
		-	300	2	40	434	385	578	770	4001
20DJ500	10	450	-	2	40	564	500	550	750	4441
		-	350	2	40	474	420	630	840	4441
20DJ590	11	500	-	2	40	666	590	649	956	4700
		-	450	2	40	587	520	780	956	4700
20DJ650	11	500	-	2	40	733	650	715	1062	5352
		-	500	2	40	666	590	885	1062	5352
20DJ730	11	600	-	2	40	824	730	803	1095	5902
		-	500	2	40	733	650	975	1170	5902
20DJ820	12	700	-	2	40	925	820	902	1230	6901
		-	600	2	40	824	730	1095	1314	6901
20DJ920	12	800	-	2	40	1038	920	1012	1380	8003
		-	700	2	40	925	820	1230	1476	8003
20DJ1K0	12	900	-	2	40	1162	1030	1133	1555	8797
		-	800	2	35	1038	920	1370	1600	8797
20DJ1K1	13	1000	-	2	40	1297	1150	1265	1620	10627
		-	900	2	40	1162	1030	1545	1620	10627
20DJ1K3	13	1200	-	2	40	1467	1300	1430	2079	11609
		-	1000	2	40	1297	1150	1725	2079	11609
20DJ1K4	13	1250	-	2	40	1636	1450	1595	2175	12713
		-	1000	2	40	1354	1200	1800	2400	12713

(1) Maximum air temperature surrounding the drive module.

810 Volt DC Input Frames 1…6 Drive Ratings

Drive Catalog Number	Frame	HP Rating		PWM Freq.	Temp.(1)	DC Input Ratings	Output Amps			Watts Loss
		ND	HD	kHz	°C	Amps	Cont.	1 Min	3 Sec.	
20DE1P7	1	1	0.75	4	50	1.5	1.7	2	2.6	92
20DE2P7	1	2	1.5	4	50	2.4	2.7	3.6	4.8	103
20DE3P9	1	3	2	4	50	3.5	3.9	4.3	5.9	119
20DE6P1	1	5	3	4	50	6.2	6.1	6.7	9.2	179
20DE9P0	1	7.5	5	4	50	9.1	9	9.9	13.5	193
20DE011	1	10	7.5	4	50	11.5	11	13.5	18	222
20DE017	1	15	10	4	50	18	17	18.7	25.5	306
20DE022	2	20	15	4	50	23.6	22	25.5	34	376
20DE027	2	25	20	4	50	29	27	33	44	418
20DE032	3	30	25	4	50	34.3	32	40.5	54	447
20DE041	3	40	30	4	50	43.9	41	48	64	590
20DE052	3	50	40	4	50	55.7	52	61.5	82	663
20DE062	4	60	50	2	45	68.0	62	78	104	749
20DT099	5	100	–	2	50(2)	108.6	99	109	126	1691
		–	75	2	50(2)	84.5	77	116	138	1691
20DT144	6	150	–	2	50(2)	158	144	158	216	1901
		–	125	2	40(2)	137.1	125	188	250	1901

(1) The temperature rating that is listed for frame size 1…4 drives is for NEMA/UL open types only. The adhesive tape label must be removed in order to operate at this temperature, otherwise the ambient operating temperature of these drives is 40 °C.

810 Volt DC Input Frames 9…14 Drive Ratings

Drive Catalog Number	Frame	HP Rating		PWM Freq.	Temp. (2)	DC Input Ratings	Output Amps			Watts Loss
		ND	HD	kHz	°C	Amps	Cont.	1 Min	3 Sec.	
20DK170	9	150	–	2	40	192	170	187	245	2741
		–	150	2	40	162	144	216	245	2741
20DK208	9	200	–	2	35	235	208	230	289	2954
		–	150	2	40	192	170	250	289	2954
20DK261	10	250	–	2	40	294	261	287	375	3155
		–	200	2	40	235	208	312	375	3155
20DK325	10	350	–	2	40	367	325	358	470	3563
		–	250	2	40	294	261	392	470	3563
20DK385	10	400	–	2	40	434	385	424	585	4145
		–	350	2	40	367	325	488	585	4145
20DK416	10	450	–	2	35	469	416	458	585	4217
		–	350	2	40	367	325	488	585	4217
20DK460	11	500	–	2	40	519	460	506	693	4505
		–	400	2	40	434	385	578	693	4505
20DK502	11	500	–	2	40	566	502	552	828	4917
		–	500	2	40	519	460	690	828	4917
20DK590	11	600	–	2	35	666	590	649	885	5353
		–	500	2	35	566	502	753	904	5353
20DK650	12	700	–	2	40	733	650	715	1062	7127
		–	650	2	40	666	590	885	1062	7127
20DK750	12	800	–	2	40	846	750	825	1170	7928
		–	700	2	40	733	650	975	1170	7928
20DK820 (1)	12	900	–	2	35	925	820	902	1170	8312
		–	700	2	35	733	650	975	1170	8312
20DK920	13	1000	–	2	40	1038	920	1012	1380	9771
		–	900	2	40	925	820	1230	1410	9771

810 Volt DC Input Frames 9…14 Drive Ratings (continued)

Drive Catalog Number	Frame	HP Rating		PWM Freq.	Temp. (2)	DC Input Ratings	Output Amps			Watts Loss
		ND	HD	kHz	°C	Amps	Cont.	1 Min	3 Sec.	
20DK1K0	13	1100	–	2	40	1162	1030	1133	1545	12248
		–	1000	2	40	1038	920	1380	1755	12248
20DK1K1	13	1300	–	2	35	1331	1180	1298	1755	13326
		–	1100	2	35	1162	1030	1463	1755	13326
20DK1K5	14	1600	–	2	40	1692	1500	1650	2250	17325
		–	1400	2	40	1467	1300	1950	2340	17325

(1) 20DK820 drives (ND) are only capable of producing 95% of starting torque under 10 Hz.
(2) Maximum air temperature surrounding the drive module.

932 Volt DC Input Frames 5 & 6 Drive Ratings

Drive Catalog Number	Frame	kW Rating		PWM Freq.	Temp.(1)	DC Input Ratings	Output Amps			Watts Loss
		ND	HD	kHz	°C	Amps	Cont.	1 Min	3 Sec.	
20DW098	5	90	–	2	50(2)	92.3	98	108	127	1590
		–	75	2	50(2)	92.3	82	123	140	1590
20DW142	6	132	–	2	50(2)	162.2	142	156	213	1901
		–	110	2	40(2)	134.9	119	179	238	1901

(1) The temperature rating that is listed for frame size 1…4 drives is for NEMA/UL open types only. The adhesive tape label must be removed in order to operate at this temperature, otherwise the ambient operating temperature of these drives is 40 °C.

932 Volt DC Input Frames 9…14 Drive Ratings

Drive Catalog Number	Frame	kW Rating		PWM Freq.	Temp. (2)	DC Input Ratings	Output Amps			Watts Loss
		ND	HD	kHz	°C	Amps	Cont.	1 Min	3 Sec.	
20DM170	9	160	–	2	40	200	170	187	245	2715
		–	132	2	40	170	144	216	245	2715
20DM208	9	200	–	2	35	245	208	230	289	2941
		–	160	2	40	200	170	250	289	2941
20DM261	10	250	–	2	40	307	261	287	375	3155
		–	200	2	40	245	208	312	375	3155
20DM325	10	315	–	2	40	383	325	358	470	3563
		–	250	2	40	307	261	392	470	3563
20DM385	10	355	–	2	40	453	385	424	585	4145
		–	315	2	40	383	325	488	585	4145
20DM416	10	400	–	2	35	490	416	458	585	4217
		–	315	2	40	383	385	488	585	4217
20DM460	11	450	–	2	40	542	460	506	693	4505
		–	355	2	40	453	416	578	693	4505
20DM502	11	500	–	2	40	591	502	552	828	4917
		–	400	2	40	542	460	690	828	4917
20DM590	11	560	–	2	35	695	590	649	885	5353
		–	500	2	35	591	502	753	904	5353
20DM650	12	630	–	2	40	765	650	715	1062	7127
		–	560	2	40	695	590	885	1062	7127
20DM750	12	710	–	2	40	883	750	825	1170	7928
		–	630	2	40	765	650	975	1170	7928
20DM820(1)	12	800	–	2	35	965	820	902	1170	8312
		–	630	2	35	765	650	975	1170	8312
20DM920	13	900	–	2	40	1038	920	1012	1380	9771
		–	800	2	40	925	820	1230	1410	9771

932 Volt DC Input Frames 9…14 Drive Ratings (continued)

Drive Catalog Number	Frame	kW Rating		PWM Freq.	Temp. (2)	DC Input Ratings	Output Amps			Watts Loss
		ND	HD	kHz	°C	Amps	Cont.	1 Min	3 Sec.	
20DM1K0	13	1000	–	2	40	1162	1030	1133	1545	12248
		–	900	2	40	1038	920	1380	1755	12248
20DM1K1	13	1100	–	2	35	1331	1180	1298	1755	13326
		–	1000	2	35	1162	1030	1463	1755	13326
20DM1K5	14	1500	–	2	40	1766	1500	1650	2250	17325
		–	1300	2	40	1530	1300	1950	2340	17325

(1) 20DM820 drives (ND) are only capable of producing 95% of starting torque under 10 Hz.
(2) Maximum air temperature surrounding the drive module.

Fusing and Circuit Breakers

The tables on the following pages provide recommended AC line input fuse and circuit breaker information. See Fusing and Circuit Breakers below for UL and IEC requirements. Sizes that are listed are the recommended sizes based on 40 °C (104 °F) and the U.S. NEC. Other country, state, or local codes can require different ratings. Tables with DC link fuse recommendations for DC input drives are also provided.

Fusing

The recommend fuse types are listed below. If available current ratings do not match those listed in the tables that are provided, choose the next higher fuse rating.

- IEC – BS88 (British Standard) Parts 1 & 2, EN60269-1, Parts 1 & 2[(1)], type gG or equivalent should be used.
- UL - UL requirements specify that UL Class CC, T, RK1, or J fuses must be used for all drives in this section.

Circuit Breakers

The “non-fuse” listings in the following tables include inverse time circuit breakers, instantaneous trip circuit breakers (motor circuit protectors), and 140M self-protected combination motor controllers. If one of these is chosen as the desired protection method, the following requirements apply:

- IEC – Both types of circuit breakers and 140M self-protected combination motor controllers are acceptable for IEC installations.
- UL - Only inverse time circuit breakers and the specified 140M self-protected combination motor controllers are acceptable for UL installations.

(1) Typical designations include, but may not be limited to the following; Parts 1 & 2: AC, AD, BC, BD, CD, DD, ED, EFS, EF, FF, FG, GF, GG, GH.

208 Volt AC Input Frames 1…6 Drive Protection Devices

Drive Catalog Number	Frame	kW Rating		Input Ratings		Dual Element Time Delay Fuse		Non-time Delay Fuse		Circuit Breaker (3)	Motor Circuit Protector (5)	140M Motor Starter with Adjustable Current Range (6)(7)			
		ND	HD	Amps	kVA	Min (1)	Max (2)	Min (1)	Max (2)	Max (4)	Max (5)	Available Catalog Numbers (8)			Minimum Enclosure Volume (in.^{3}) (9)
20DB4P2	1	0.75	0.55	3.7	1.3	6	10	6	17.5	15	7	M-C2E-B63	M-D8E-B63	–	7269
20DB6P8	1	1.5	1.1	6.8	2.4	10	15	10	30	30	15	M-C2E-C10	M-D8E-C10	M-F8E-C10	7269
20DB9P6	1	2.2	1.5	9.5	3.4	12	20	12	40	40	15	M-C2E-C16	M-D8E-C16	M-F8E-C16	7269
20DB015	1	4.0	3.0	15.7	5.7	20	35	20	70	70	30	M-C2E-C20	M-D8E-C20	M-F8E-C20	7269
20DB022	1	5.5	4.0	23.0	8.3	30	50	30	100	100	30	–	M-D8E-C25	M-F8E-C25	7269
20DB028	2	7.5	5.5	29.6	10.7	40	70	40	125	125	50	–	–	M-F8E-C32	7269
20DB042	3	11	7.5	44.5	16.0	60	100	60	175	175	70	–	–	M-F8E-C45	13630
20DB052	3	15	11	51.5	18.6	80	125	80	200	200	100	–	–	–	–
20DB070	4	18.5	15	72	25.9	90	175	90	300	300	100	–	–	–	–
20DB080	4	22	18.5	84.7	30.5	110	200	110	350	350	150	–	–	–	–
20DB104	5	30	–	113	40.7	150	250	150	475	350	150	–	–	–	–
		–	22	84.7	30.5	125	200	125	350	300	150	–	–	–	–
20DB130	5	37	–	141	44.1	175	275	175	500	375	250	–	–	–	–
		–	30	113	35.3	125	225	125	400	300	150	–	–	–	–
20DB154	6	45	–	167	60.1	225	350	225	500	500	250	–	–	–	–
		–	37	141	50.9	200	300	200	500	450	250	–	–	–	–
20DB192	6	55	–	208	75.0	300	450	300	600	600	400	–	–	–	–
		–	45	167	60.1	225	350	225	500	500	250	–	–	–	–
20DB260	6	66	–	255	96.7	300	575	300	750	750	400	–	–	–	–
		–	55	199	71.7	225	450	225	600	600	400	–	–	–	–

(1) Minimum protection device size is the lowest rated device that supplies maximum protection without nuisance tripping.
(2) Maximum protection device size is the highest rated device that supplies drive protection. For US NEC, minimum size is 125% of motor FLA. Ratings that are shown are maximum.
(3) Circuit Breaker - inverse time breaker. For US NEC, minimum size is 125% of motor FLA. Ratings that are shown are maximum.
(4) Maximum allowable rating by US NEC. Exact size must be chosen for each installation.
(5) Motor Circuit Protector - instantaneous trip circuit breaker. For US NEC minimum size is 125% of motor/drive FLA. Ratings that are shown are suggested. Instantaneous trip settings must be set to US NEC code. Not to exceed 1300% FLA.
(6) Bulletin 140M with adjustable current range should have the current trip set to the minimum range that the device will not trip.
(7) Manual Self-Protected (Type E) Combination Motor Controller, UL listed for 208 Wye or Delta, 240 Wye or Delta, 480Y/277 or 600Y/ 347. Not UL listed for use on 480V or 600V Delta/Delta, corner ground, or high-resistance ground systems.
(8) The AIC ratings of the Bulletin 140M Motor Protector Circuit Breakers may vary. See Bulletin 140M Motor Protection Circuit Breakers Application Ratings.
(9) When using a Manual Self-Protected (Type E) Combination Motor Controller, the drive must be installed in a ventilated or non-ventilated enclosure with the minimum volume that is specified in this column. Application-specific thermal considerations may require a larger enclosure.

240 Volt AC Input Frames 1…6 Drive Protection Devices

Drive Catalog Number	Frame	HP Rating		Input Ratings		Dual Element Time Delay Fuse		Non-time Delay Fuse		Circuit Breaker (3)	Motor Circuit Protector (5)	140M Motor Starter with Adjustable Current Range (6)(7)			
		ND	HD	Amps	kVA	Min (1)	Max (2)	Min (2)	Max (3)	Max (4)	Max (5)	Available Catalog Numbers (8)			Minimum Enclosure Volume (in.^{3}) (9)
20DB4P2	1	1	0.75	3.3	1.4	5	8	5	15	15	7	M-C2E-B63	M-D8E-B63	–	7269
20DB6P8	1	2	1.5	5.9	2.4	10	15	10	25	25	15	M-C2E-C10	M-D8E-C10	M-F8E-C10	7269
20DB9P6	1	3	2	8.3	3.4	12	20	12	35	35	15	M-C2E-C10	M-D8E-C10	M-F8E-C10	7269
20DB015	1	5	3	13.7	5.7	20	30	20	60	60	30	M-C2E-C16	M-D8E-C16	M-F8E-C16	7269
20DB022	1	7.5	5	19.9	8.3	25	50	25	80	80	30	–	M-D8E-C25	M-F8E-C25	7269
20DB028	2	10	7.5	25.7	10.7	35	60	35	100	100	50	–	–	M-F8E-C32	7269
20DB042	3	15	10	38.5	16.0	50	90	50	150	150	50	–	–	M-F8E-C45	13630
20DB052	3	20	15	47.7	19.8	60	100	60	200	200	100	–	–	–	–
20DB070	4	25	20	64.2	26.7	90	150	90	275	275	100	–	–	–	–
20DB080	4	30	25	73.2	30.5	100	180	100	300	300	100	–	–	–	–
20DB104	5	40	–	98	40.6	125	225	125	400	300	150	–	–	–	–
		–	30	73	30.5	100	175	100	300	300	100	–	–	–	–
20DB130	5	50	–	122	50.7	175	275	175	500	375	250	–	–	–	–
		–	40	98	40.6	125	225	125	400	300	150	–	–	–	–
20DB154	6	60	–	145	60.1	200	300	200	600	450	250	–	–	–	–
		–	50	122	50.7	175	275	175	500	375	250	–	–	–	–
20DB192	6	75	–	180	74.9	225	400	225	600	575	250	–	–	–	–
		–	60	145	60.1	200	300	200	600	450	250	–	–	–	–
20DB260	6	100	–	233	96.8	300	575	300	750	750	400	–	–	–	–
		–	75	169	74.9	225	450	225	600	600	400	–	–	–	–

(1) Minimum protection device size is the lowest rated device that supplies maximum protection without nuisance tripping.
(2) Maximum protection device size is the highest rated device that supplies drive protection. For US NEC, minimum size is 125% of motor FLA. Ratings that are shown are maximum.
(3) Circuit Breaker - inverse time breaker. For US NEC, minimum size is 125% of motor FLA. Ratings that are shown are maximum.
(4) Maximum allowable rating by US NEC. Exact size must be chosen for each installation.
(5) Motor Circuit Protector - instantaneous trip circuit breaker. For US NEC minimum size is 125% of motor/drive FLA. Ratings that are shown are suggested. Instantaneous trip settings must be set to US NEC code. Not to exceed 1300% FLA.
(6) Bulletin 140M with adjustable current range should have the current trip set to the minimum range that the device will not trip.
(7) Manual Self-Protected (Type E) Combination Motor Controller, UL listed for 208 Wye or Delta, 240 Wye or Delta, 480Y/277 or 600Y/ 347. Not UL listed for use on 480V or 600V Delta/Delta, corner ground, or high-resistance ground systems.
(8) The AIC ratings of the Bulletin 140M Motor Protector Circuit Breakers may vary. See Bulletin 140M Motor Protection Circuit Breakers Application Ratings.
(9) When using a Manual Self-Protected (Type E) Combination Motor Controller, the drive must be installed in a ventilated or non-ventilated enclosure with the minimum volume that is specified in this column. Application-specific thermal considerations may require a larger enclosure.

400 Volt AC Input Frames 1…6 Drive Protection Devices

Drive Catalog Number	Frame	kW Rating		Input Ratings		Dual Element Time Delay Fuse		Non-time Delay Fuse		Circuit Breaker (5)	Motor Circuit Protector (7)	140M Motor Starter with Adjustable Current Range (8)(9)			
		ND	HD	Amps	kVA	Min (3)	Max (4)	Min (5)	Max (6)	Max (6)	Max (8)	Available Catalog Numbers (10)			Minimum Enclosure Volume (in.^{3}) (11)
20DC2P1	1	0.75	0.55	1.8	1.3	3	6	3	8	15	3	M-C2E-B25	M-D8E-B25	–	7269
20DC3P5	1	1.5	1.1	3.2	2.2	6	7	6	12	15	7	M-C2E-B40	M-D8E-B40	–	7269
20DC5P0	1	2.2	1.5	4.6	3.2	6	10	6	20	20	7	M-C2E-B63	M-D8E-B63	–	7269
20DC8P7	1	4	3.0	7.9	5.5	15	17.5	15	30	30	15	M-C2E-C10	M-D8E-C10	M-F8E-C10	7269
20DC011	1	5.5	4	10.8	7.5	15	25	15	45	45	15	M-C2E-C16	M-D8E-C16	M-F8E-C16	7269
20DC015	1	7.5	5.5	14.4	10.0	20	30	20	60	60	20	M-C2E-C20	M-D8E-C20	M-F8E-C20	7269
20DC022	1	11	7.5	20.6	14.3	30	45	30	80	80	30	–	M-D8E-C25	M-F8E-C25	7269
20DC030	2	15	11	28.4	19.7	35	60	35	120	120	50	–	–	M-F8E-C32	7269
20DC037	2	18.5	15	35.0	24.3	45	80	45	125	125	50	–	–	M-F8E-C45	7269
20DC043	3	22	18.5	40.7	28.2	60	90	60	150	150	60	–	–	–	–
20DC056	3	30	22	53	36.7	70	125	70	200	200	100	–	–	–	–
20DC072	3	37	30	68.9	47.8	90	150	90	250	250	100	–	–	–	–
20DC085 (1)	4	45	–	81.4	56.4	110	200	110	300	300	150	–	–	–	–
		–	37	68.9	47.8	90	175	90	275	300	100	–	–	–	–
20DC105	5	55	–	100.5	69.6	125	225	125	400	300	150	–	–	–	–
		–	45	81.4	56.4	110	175	110	300	300	150	–	–	–	–
20DC125	5	55	–	121.1	83.9	150	275	150	500	375	250	–	–	–	–
		–	45	101	63.7	125	200	125	375	375	150	–	–	–	–
20DC140	5	75	–	135.6	94	200	300	200	400	400	250	–	–	–	–
		–	55	121	69.6	150	225	150	300	300	150	–	–	–	–
20DC170	6	90	–	164.6	114	250	375	250	600	500	250	–	–	–	–
		–	75	136	94	200	300	200	550	400	250	–	–	–	–
20DC205 (2)	6	110	–	198.5	138	250	450	250	600	600	400	–	–	–	–
		–	90	164	114	250	375	250	600	500	250	–	–	–	–
20DC260	6	132	–	254.7	166	350	550	350	750	750	400	–	–	–	–
		–	110	199	138	250	450	250	600	600	400	–	–	–	–

(1) 20DC085 current rating is limited to 45° C ambient.
(2) 20DC205 current rating is limited to 40° C ambient.
(3) Minimum protection device size is the lowest rated device that supplies maximum protection without nuisance tripping.
(4) Maximum protection device size is the highest rated device that supplies drive protection. For US NEC, minimum size is 125% of motor FLA. Ratings that are shown are maximum.
(5) Circuit Breaker - inverse time breaker. For US NEC, minimum size is 125% of motor FLA. Ratings that are shown are maximum.
(6) Maximum allowable rating by US NEC. Exact size must be chosen for each installation.
(7) Motor Circuit Protector - instantaneous trip circuit breaker. For US NEC minimum size is 125% of motor/drive FLA. Ratings that are shown are suggested. Instantaneous trip settings must be set to US NEC code. Not to exceed 1300% FLA.
(8) Bulletin 140M with adjustable current range should have the current trip set to the minimum range that the device will not trip.
(9) Manual Self-Protected (Type E) Combination Motor Controller, UL listed for 208 Wye or Delta, 240 Wye or Delta, 480Y/277 or 600Y/ 347. Not UL listed for use on 480V or 600V Delta/Delta, corner ground, or high-resistance ground systems.
(10) The AIC ratings of the Bulletin 140M Motor Protector Circuit Breakers may vary. See Bulletin 140M Motor Protection Circuit Breakers Application Ratings.
(11) When using a Manual Self-Protected (Type E) Combination Motor Controller, the drive must be installed in a ventilated or non-ventilated enclosure with the minimum volume that is specified in this column. Application-specific thermal considerations may require a larger enclosure.

400 Volt AC Input Frames 9…13 Drive Protection Devices

Drive Catalog Number	Frame	kW Rating		Input Ratings	Dual Element Time Delay Fuse		Non-time Delay Fuse		Bussmann Style Semi-conductor Fuse	Circuit Breaker (4)	Motor Circuit Protector (6)
		ND	HD	Amps	Min (1)	Max (3)	Min (1)	Max (3)		Max (5)	Max (5)
20DC261	9	132	-	263	350	550	350	700	170M5813	700	400
		-	110	207	275	450	275	600	170M5813	600	300
20DC300	9	160	-	302	400	650	400	900	170M5813	900	400
		-	132	247	350	500	350	700	170M5813	700	400
20DC385	10	200	-	388	500	850	500	1100	170M5813	1100	600
		-	160	302	400	650	400	900	170M5813	900	400
20DC460	10	250	-	463	600	1000	600	1300	170M8547	1300	600
		-	200	388	500	850	500	1100	170M8547	1100	600
20DC500	10	250	-	504	650	1100	650	1500	170M8547	1500	700
		-	250	423	550	900	550	1200	170M8547	1200	600
20DC590	11	315	-	594	750 (1 per phs) 375 (2 per phs)	1300	750 (1 per phs) 375 (2 per phs)	1700	170M5813	1700	800
		-	250	524	700 (1 per phs) 350 (2 per phs)	1100	700 (1 per phs) 350 (2 per phs)	1500	170M5813	1500	700
20DC650	11	355	-	655	850 (1 per phs) 425 (2 per phs)	1400	850 (1 per phs) 425 (2 per phs)	1900	170M5813	1900	1000
		-	315	594	750 (1 per phs) 375 (2 per phs)	1300	750 (1 per phs) 375 (2 per phs)	1700	170M5813	1700	800
20DC730	11	400	-	735	1000 (1 per phs) 500 (2 per phs)	1600	1000 (1 per phs) 500 (2 per phs)	2100	170M5813	2100	1200
		-	355	655	850 (1 per phs) 425 (2 per phs)	1400	850 (1 per phs) 425 (2 per phs)	1900	170M5813	1900	1000
20DC820	12	450	-	826	1100 (1 per phs) 550 (2 per phs)	1800	1100 (1 per phs) 550 (2 per phs)	2400	170M8547	2400	1200
		-	400	735	1000 (1 per phs) 500 (2 per phs)	1600	1000 (1 per phs) 500 (2 per phs)	2100	170M8547	2100	1200
20DC920	12	500	-	927	1200 (1 per phs) 600 (2 per phs)	2000	1200 (1 per phs) 600 (2 per phs)	2700	170M8547	2700	1200
		-	450	826	1100 (1 per phs) 550 (2 per phs)	1800	1100 (1 per phs) 550 (2 per phs)	2400	170M8547	2400	1200
20DC1K0	12	560	-	1038	1350 (1 per phs) 700 (2 per phs)	2300	1350 (1 per phs) 700 (2 per phs)	3000	170M8547	3000	1400
		-	500	927	1200 (1 per phs) 600 (2 per phs)	2000	1200 (1 per phs) 600 (2 per phs)	2700	170M8547	2700	1200
20DC1K1	13	630	-	1158	1350 (1 per phs) 700 (2 per phs) (2)	2300 (2)	1350 (1 per phs) 700 (2 per phs) (2)	3000 (2)	170M6466 (2)	3000	1400
		-	560	1038	1500 (1 per phs) 750 (2 per phs) (2)	2500 (2)	1500 (1 per phs) 750 (2 per phs) (2)	3400 (2)	170M6466 (2)	3400	1500
20DC1K3	13	710	-	1310	1700 (1 per phs) 850 (2 per phs) (2)	2900 (2)	1700 (1 per phs) 850 (2 per phs) (2)	3900 (2)	170M6466 (2)	3900	1700
		-	630	1158	1500 (1 per phs) 750 (2 per phs) (2)	2500 (2)	1500 (1 per phs) 750 (2 per phs) (2)	3400 (2)	170M6466 (2)	3400	1500
20DC1K4	13	800	-	1461	1900 (1 per phs) 950 (2 per phs) (2)	3000 (2)	1900 (1 per phs) 950 (2 per phs) (2)	4300 (2)	170M6466 (2)	4300	1900
		-	710	1209	1600 (1 per phs) 800 (2 per phs) (2)	2700 (2)	1600 (1 per phs) 800 (2 per phs) (2)	3600 (2)	170M6466 (2)	3600	1600

(1) Minimum protection device size is the lowest rated device that supplies maximum protection without nuisance tripping.
(2) Fuses and disconnect are supplied with AC input NEMA/UL Type 1 drives.
(3) Maximum protection device size is the highest rated device that supplies drive protection. For US NEC, minimum size is 125% of motor FLA. Ratings that are shown are maximum.
(4) Circuit Breaker - inverse time breaker. For US NEC, minimum size is 125% of motor FLA. Ratings that are shown are maximum.
(5) Maximum allowable rating by US NEC. Exact size must be chosen for each installation.
(6) Motor Circuit Protector - instantaneous trip circuit breaker. For US NEC minimum size is 125% of motor/drive FLA. Ratings that are shown are suggested. Instantaneous trip settings must be set to US NEC code. Not to exceed 1300% FLA.

480 Volt AC Input Frames 1…6 Drive Protection Devices

Drive Catalog Number	Frame	HP Rating		Input Ratings		Dual Element Time Delay Fuse		Non-time Delay Fuse		Circuit Breaker (3)	Motor Circuit Protector (5)	140M Motor Starter with Adjustable Current Range (6)(7)			
		ND	HD	Amps	kVA	Min (1)	Max (2)	Min (3)	Max (4)	Max (4)	Max (6)	Available Catalog Numbers (8)			Minimum Enclosure Volume (in.^{3}) (9)
20DD2P1	1	1	0.75	1.6	1.4	3	6	3	8	15	3	M-C2E-B25	–	–	7269
20DD3P4	1	2	1.5	2.6	2.2	4	8	4	12	15	7	M-C2E-B40	M-D8E-B40	–	7269
20DD5P0	1	3	2	3.9	3.2	6	10	6	20	20	7	M-C2E-B63	M-D8E-B63	–	7269
20DD8P0	1	5	3	6.9	5.7	10	15	10	30	30	15	M-C2E-C10	M-D8E-C10	M-F8E-C10	7269
20DD011	1	7.5	5	9.5	7.9	15	20	15	40	40	15	M-C2E-C16	M-D8E-C16	M-F8E-C16	7269
20DD014	1	10	7.5	12.5	10.4	17.5	30	17.5	50	50	20	M-C2E-C16	M-D8E-C16	M-F8E-C16	7269
20DD022	1	15	10	19.9	16.6	25	50	25	80	80	30	–	M-D8E-C25	M-F8E-C25	7269
20DD027	2	20	15	24.8	20.6	35	60	35	100	100	50	–	–	M-F8E-C32	7269
20DD034	2	25	20	31.2	25.9	40	70	40	125	125	50	–	–	M-F8E-C45	7269
20DD040	3	30	25	36.7	30.5	50	90	50	150	150	50	–	–	M-F8E-C45	13630
20DD052	3	40	30	47.7	39.7	60	110	60	200	200	70	–	–	–	–
20DD065	3	50	40	59.6	49.6	80	125	80	250	250	100	–	–	–	–
20DD077	4	60	–	72.3	60.1	100	170	100	300	300	100	–	–	–	–
		–	50	59.6	49.6	80	125	80	250	250	100	–	–	–	–
20DD096	5	75	–	90.1	74.9	125	200	125	350	350	125	–	–	–	–
		–	60	72.3	60.1	100	170	100	300	300	100	–	–	–	–
20DD125	5	100	–	117	97.6	150	250	150	500	375	150	–	–	–	–
		–	75	90.1	74.9	125	200	125	350	350	125	–	–	–	–
20DD156	6	125	–	146.5	121.7	200	350	200	600	450	250	–	–	–	–
		–	100	131	97.6	175	250	175	500	375	250	–	–	–	–
20DD180	6	150	–	169	140.5	225	400	225	600	500	250	–	–	–	–
		–	125	147	121.7	200	350	200	600	450	250	–	–	–	–
20DD248	6	200		232.8	188	300	550	300	700	700	400	–	–	–	–
			150	169	140.5	225	400	225	600	500	250	–	–	–	–

(1) Minimum protection device size is the lowest rated device that supplies maximum protection without nuisance tripping.
(2) Maximum protection device size is the highest rated device that supplies drive protection. For US NEC, minimum size is 125% of motor FLA. Ratings that are shown are maximum.
(3) Circuit Breaker - inverse time breaker. For US NEC, minimum size is 125% of motor FLA. Ratings that are shown are maximum.
(4) Maximum allowable rating by US NEC. Exact size must be chosen for each installation.
(5) Motor Circuit Protector - instantaneous trip circuit breaker. For US NEC minimum size is 125% of motor/drive FLA. Ratings that are shown are suggested. Instantaneous trip settings must be set to US NEC code. Not to exceed 1300% FLA.
(6) Bulletin 140M with adjustable current range should have the current trip set to the minimum range that the device will not trip.
(7) Manual Self-Protected (Type E) Combination Motor Controller, UL listed for 208 Wye or Delta, 240 Wye or Delta, 480Y/277 or 600Y/ 347. Not UL listed for use on 480V or 600V Delta/Delta, corner ground, or high-resistance ground systems.
(8) The AIC ratings of the Bulletin 140M Motor Protector Circuit Breakers may vary. See Bulletin 140M Motor Protection Circuit Breakers Application Ratings.
(9) When using a Manual Self-Protected (Type E) Combination Motor Controller, the drive must be installed in a ventilated or non-ventilated enclosure with the minimum volume that is specified in this column. Application-specific thermal considerations may require a larger enclosure.

480 Volt AC Input Frames 9…13 Drive Protection Devices

Drive Catalog Number	Frame	HP Rating		Input Ratings	Dual Element Time Delay Fuse		Non-time Delay Fuse		Bussmann Style Semi-conductor Fuse	Circuit Breaker (4)	Motor Circuit Protector (6)
		ND	HD	Amps	Min (1)	Max (3)	Min (1)	Max (3)		Max (5)	Max (5)
20DD261	9	200	-	252	350	550	350	700	170M5813	700	400
		-	150	207	275	450	275	600	170M5813	600	300
20DD300	9	250	-	290	400	650	400	900	170M5813	900	400
		-	200	247	350	550	350	700	170M5813	700	400
20DD385	10	300	-	372	500	850	500	1100	170M5813	1100	600
		-	250	302	400	650	400	900	170M5813	900	400
20DD460	10	350	-	444	600	1000	600	1300	170M8547	1300	600
		-	300	388	500	850	500	1100	170M8547	1100	600
20DD500	10	450	-	483	650	1000	650	1500	170M8547	1500	700
		-	350	423	550	900	550	1200	170M8547	1200	600
20DD590	11	500	-	570	750 (1 per phs) 375 (2 per phs)	1300	750 (1 per phs) 375 (2 per phs)	1700	170M5813	1700	800
		-	450	524	700 (1 per phs) 350 (2 per phs)	1100	700 (1 per phs) 350 (2 per phs)	1500	170M5813	1500	700
20DD650	11	500	-	628	800 (1 per phs) 400 (2 per phs)	1400	800 (1 per phs) 400 (2 per phs)	1900	170M5813	1900	800
		-	500	594	750 (1 per phs) 375 (2 per phs)	1300	750 (1 per phs) 375 (2 per phs)	1700	170M5813	1700	800
20DD730	11	600	-	705	900 (1 per phs) 450 (2 per phs)	1600	900 (1 per phs) 450 (2 per phs)	2100	170M5813	2100	900
		-	500	655	850 (1 per phs) 425 (2 per phs)	1400	850 (1 per phs) 425 (2 per phs)	1900	170M5813	1900	900
20DD820	12	700	-	792	1000 (1 per phs) 500 (2 per phs)	1800	1000 (1 per phs) 500 (2 per phs)	2400	170M8547	2400	1000
		-	600	735	900 (1 per phs) 475 (2 per phs)	1600	900 (1 per phs) 475 (2 per phs)	2100	170M8547	2100	1000
20DD920	12	800	-	888	1200 (1 per phs) 600 (2 per phs)	2000	1200 (1 per phs) 600 (2 per phs)	2700	170M8547	2700	1200
		-	700	826	1100 (1 per phs) 550 (2 per phs)	1800	1100 (1 per phs) 550 (2 per phs)	2400	170M8547	2400	1200
20DD1K0	12	900	-	994	1300 (1 per phs) 650 (2 per phs)	2300	1300 (1 per phs) 650 (2 per phs)	3000	170M8547	3000	1300
		-	800	927	1200 (1 per phs) 600 (2 per phs)	2000	1200 (1 per phs) 600 (2 per phs)	2700	170M8547	2700	1200
20DD1K1	13	1000	-	1110	1400 (1 per phs) 700 (2 per phs) (2)	2500 (2)	1400 (1 per phs) 700 (2 per phs) (2)	3400 (2)	170M6466 (2)	3400	1400
		-	900	994	1300 (1 per phs) 650 (2 per phs) (2)	2300 (2)	1300 (1 per phs) 650 (2 per phs) (2)	3000 (2)	170M6466 (2)	3000	1300
20DD1K3	13	1200	-	1255	1600 (1 per phs) 800 (2 per phs) (2)	2900 (2)	1600 (1 per phs) 800 (2 per phs) (2)	3900 (2)	170M6466 (2)	3900	1600
		-	1000	1110	1400 (1 per phs) 700 (2 per phs) (2)	2500 (2)	1400 (1 per phs) 700 (2 per phs) (2)	3400 (2)	170M6466 (2)	3400	1400
20DD1K4	13	1250	-	1400	1800 (1 per phs) 900 (2 per phs) (2)	3200 (2)	1800 (1 per phs) 900 (2 per phs) (2)	4300 (2)	170M6466 (2)	4300	1800
		-	1000	1158	1500 (1 per phs) 750 (2 per phs) (2)	2700 (2)	1500 (1 per phs) 750 (2 per phs) (2)	3600 (2)	170M6466 (2)	3600	1500

(1) Minimum protection device size is the lowest rated device that supplies maximum protection without nuisance tripping.
(2) Fuses and disconnect are supplied with AC input NEMA/UL Type 1 drives.
(3) Maximum protection device size is the highest rated device that supplies drive protection. For US NEC, minimum size is 125% of motor FLA. Ratings that are shown are maximum.
(4) Circuit Breaker - inverse time breaker. For US NEC, minimum size is 125% of motor FLA. Ratings that are shown are maximum.
(5) Maximum allowable rating by US NEC. Exact size must be chosen for each installation.
(6) Motor Circuit Protector - instantaneous trip circuit breaker. For US NEC minimum size is 125% of motor/drive FLA. Ratings that are shown are suggested. Instantaneous trip settings must be set to US NEC code. Not to exceed 1300% FLA.

600 Volt AC Input Frames 1…6 Drive Protection Devices

Drive Catalog Number	Frame	HP Rating		Input Ratings		Dual Element Time Delay Fuse		Non-time Delay Fuse		Circuit Breaker (3)	Motor Circuit Protector (5)	140M Motor Starter with Adjustable Current Range(6)(7)			
		ND	HD	Amps	kVA	Min (1)	Max (2)	Min (3)	Max (4)	Max (4)	Max (6)	Available Catalog Numbers (8)			Minimum Enclosure Volume (in.^{3})(9)
20DE1P7	1	1	0.75	1.3	1.4	2	4	2	6	15	3	M-C2E-B16	–	–	7269
20DE2P7	1	2	1.5	2.1	2.1	3	6	3	10	15	3	M-C2E-B25	–	–	7269
20DE3P9	1	3	2	3.0	3.1	6	9	6	15	15	7	M-C2E-B40	M-D8E-B40	–	7269
20DE6P1	1	5	3	5.3	5.5	9	12	9	20	20	15	–	M-D8E-B63	–	7269
20DE9P0	1	7.5	5	7.8	8.1	10	20	10	35	30	15	–	M-D8E-C10	M-F8E-C10	7269
20DE011	1	10	7.5	9.9	10.2	15	25	15	40	40	15	–	M-D8E-C10	M-F8E-C10	7269
20DE017	1	15	10	15.4	16.0	20	40	20	60	50	20	–	M-D8E-C16	M-F8E-C16	7269
20DE022	2	20	15	20.2	21.0	30	50	30	80	80	30	–	–	M-F8E-C25	7269
20DE027	2	25	20	24.8	25.7	35	60	35	100	100	50	–	–	M-F8E-C25	7269
20DE032	3	30	25	29.4	30.5	40	70	40	125	125	50	–	–	M-F8E-C32	13630
20DE041	3	40	30	37.6	39.1	50	90	50	150	150	100	–	–	–	–
20DE052	3	50	40	47.7	49.6	60	110	60	200	200	100	–	–	–	–
20DE062	4	60	50	58.2	60.5	80	125	80	225	225	100	–	–	–	–
20DE077	5	75	–	72.3	75.1	90	150	90	300	300	100	–	–	–	–
		–	60	58.2	60.5	90	125	90	250	250	100	–	–	–	–
20DE099	5	100	–	92.9	96.6	125	200	125	375	375	150	–	–	–	–
		–	75	72.3	75.1	100	175	100	300	300	100	–	–	–	–
20DE125	6	125	–	117	121.6	150	250	150	375	375	250	–	–	–	–
		–	100	93	96.6	125	200	125	375	375	150	–	–	–	–
20DE144	6	150	–	135	140.5	175	300	175	400	400	250	–	–	–	–
		–	125	117	121.6	150	275	150	375	375	250	–	–	–	–

(1) Minimum protection device size is the lowest rated device that supplies maximum protection without nuisance tripping.
(2) Maximum protection device size is the highest rated device that supplies drive protection. For US NEC, minimum size is 125% of motor FLA. Ratings that are shown are maximum.
(3) Circuit Breaker - inverse time breaker. For US NEC, minimum size is 125% of motor FLA. Ratings that are shown are maximum.
(4) Maximum allowable rating by US NEC. Exact size must be chosen for each installation.
(5) Motor Circuit Protector - instantaneous trip circuit breaker. For US NEC minimum size is 125% of motor/drive FLA. Ratings that are shown are suggested. Instantaneous trip settings must be set to US NEC code. Not to exceed 1300% FLA.
(6) Bulletin 140M with adjustable current range should have the current trip set to the minimum range that the device will not trip.
(7) Manual Self-Protected (Type E) Combination Motor Controller, UL listed for 208 Wye or Delta, 240 Wye or Delta, 480Y/277 or 600Y/ 347. Not UL listed for use on 480V or 600V Delta/Delta, corner ground, or high-resistance ground systems.
(8) The AIC ratings of the Bulletin 140M Motor Protector Circuit Breakers may vary. See Bulletin 140M Motor Protection Circuit Breakers Application Ratings.
(9) When using a Manual Self-Protected (Type E) Combination Motor Controller, the drive must be installed in a ventilated or non-ventilated enclosure with the minimum volume that is specified in this column. Application-specific thermal considerations may require a larger enclosure.

600 Volt AC Input Frames 9…14 Drive Protection Devices

Drive Catalog Number	Frame	HP Rating		Input Ratings	Dual Element Time Delay Fuse		Non-time Delay Fuse		Bussmann Style Semi-conductor Fuse	Circuit Breaker (5)	Motor Circuit Protector (7)
		ND	HD	Amps	Min (2)	Max (4)	Min (2)	Max (4)		Max (6)	Max (6)
20DE170	9	150	–	164	225	375	225	500	170M3819	500	250
		–	150	139	175	300	175	500	170M3819	500	200
20DE208	9	200	–	201	275	450	275	600	170M3819	600	300
		–	150	164	225	375	225	500	170M3819	500	250
20DE261	10	250	–	252	325	575	325	775	170M5813	700	350
		–	200	201	275	450	275	600	170M5813	600	300
20DE325	10	350	–	314	400	725	400	950	170M5813	900	450
		–	250	252	325	575	325	775	170M5813	750	400
20DE385	10	400	–	372	475	850	475	1100	170M5813	1100	500
		–	350	314	400	725	400	950	170M5813	900	450
20DE416	10	450	–	402	525	900	525	1200	170M5813	1200	550
		–	350	314	400	725	400	950	170M5813	900	450
20DE460	11	500	–	444	575 (1 per phs) 300 (2 per phs)	1000	575 (1 per phs) 300 (2 per phs)	1300	170M8547	1300	600
		–	400	372	475 (1 per phs) 250 (2 per phs)	850	475 (1 per phs) 250 (2 per phs)	1100	170M8547	1100	500
20DE502	11	500	–	485	625 (1 per phs) 325 (2 per phs)	1100	625 (1 per phs) 325 (2 per phs)	1500	170M8547	1500	650
		–	500	444	575 (1 per phs) 300 (2 per phs)	1000	575 (1 per phs) 300 (2 per phs)	1300	170M8547	1300	600
20DE590	11	600	–	570	725 (1 per phs) 375(2 per phs)	1300	725 (1 per phs) 375(2 per phs)	1700	170M5813	1700	800
		–	500	485	625 (1 per phs) 325 (2 per phs)	1100	625 (1 per phs) 325 (2 per phs)	1500	170M5813	1500	700
20DE650	12	700	–	628	800 (1 per phs) 400 (2 per phs)	1400	800 (1 per phs) 400 (2 per phs)	1900	170M5813	1900	900
		–	650	570	725 (1 per phs) 375 (2 per phs)	1300	725 (1 per phs) 375 (2 per phs)	1700	170M5813	1700	800
20DE750	12	800	–	724	950 (1 per phs) 475 (2 per phs)	1600	950 (1 per phs) 475 (2 per phs)	2200	170M5813	2200	1000
		–	700	628	800 (1 per phs) 400 (2 per phs)	1400	800 (1 per phs) 400 (2 per phs)	1900	170M5813	1900	900
20DE820 (1)	12	900	–	792	1000 (1 per phs) 500 (2 per phs)	1800	1000 (1 per phs) 500 (2 per phs)	2400	170M5813	2400	1100
		–	700	628	800 (1 per phs) 400 (2 per phs)	1400	800 (1 per phs) 400 (2 per phs)	1900	170M5813	1900	900
20DE920	13	1000	–	888	1200 (1 per phs) 600 (2 per phs) (3)	2000 (3)	1200 (1 per phs) 600 (2 per phs) (3)	2700 (3)	170M6466 (3)	2700	1200
		–	900	792	1000 (1 per phs) 500 (2 per phs) (3)	1800 (3)	1000 (1 per phs) 500 (2 per phs) (3)	2400 (3)	170M6466 (3)	2400	1100
20DE1K0	13	1100	–	994	1300 (1 per phs) 650 (2 per phs) (3)	2300 (3)	1300 (1 per phs) 650 (2 per phs) (3)	3000 (3)	170M6466 (3)	3000	1300
		–	1000	888	1200 (1 per phs) 600 (2 per phs) (3)	2000 (3)	1200 (1 per phs) 600 (2 per phs) (3)	2700 (3)	170M6466 (3)	2700	1200
20DE1K1	13	1300	–	1139	1500 (1 per phs) 750 (2 per phs) (3)	2600 (3)	1500 (1 per phs) 750 (2 per phs) (3)	3500 (3)	170M6466 (3)	3500	1500
		–	1100	994	1300 (1 per phs) 650 (2 per phs) (3)	2200 (3)	1300 (1 per phs) 650 (2 per phs) (3)	3000 (3)	170M6466 (3)	3000	1300
20DE1K5	14	1600	–	1448	1900 (1 per phs) 650 (3 per phs)	3300	1900 (1 per phs) 650 (3 per phs)	4500	170M6466	4500	1900
		–	1400	1255	1600 (1 per phs) 550 (3 per phs)	2900	1600 (1 per phs) 550 (3 per phs)	3900	170M6466	3900	1700

(1) 20DE820 drives (ND) are only capable of producing 95% of starting torque under 10 Hz.
(2) Minimum protection device size is the lowest rated device that supplies maximum protection without nuisance tripping.
(3) Fuses and disconnect are supplied with AC input NEMA/UL Type 1 drives.
(4) Maximum protection device size is the highest rated device that supplies drive protection. For US NEC, minimum size is 125% of motor FLA. Ratings that are shown are maximum.
(5) Circuit Breaker - inverse time breaker. For US NEC, minimum size is 125% of motor FLA. Ratings that are shown are maximum.
(6) Maximum allowable rating by US NEC. Exact size must be chosen for each installation.
(7) Motor Circuit Protector - instantaneous trip circuit breaker. For US NEC minimum size is 125% of motor/drive FLA. Ratings that are shown are suggested. Instantaneous trip settings must be set to US NEC code. Not to exceed 1300% FLA.

690 Volt AC Input Frames 5 and 6 Drive Protection Devices

Drive Catalog Number	Frame	kW Rating		Input Ratings		Dual Element Time Delay Fuse		Non-time Delay Fuse		Circuit Breaker (3)	Motor Circuit Protector (5)
		ND	HD	Amps	kVA	Min (1)	Max (2)	Min (2)	Max (3)	Max (4)	Max (5)
20DF052	5	45	–	46.9	59.5	60	110	60	175	175	–
		–	37.5	40.1	48.0	50	90	50	150	150	–
20DF060	5	55	–	57.7	68.9	80	125	80	225	225	–
		–	45	46.9	59.5	60	110	60	175	175	–
20DF082	5	75	–	79.0	94.4	100	200	100	375	375	–
		–	55	57.7	68.9	80	125	80	225	225	–
20DF098	5	90	–	94.7	113	125	200	125	375	375	–
		–	75	79.0	94.4	100	200	100	375	375	–
20DF119	6	110	–	115	138	150	250	150	400	–	–
		–	90	92.9	113	125	200	125	375	–	–
20DF142	6	132	–	139	165.9	175	300	175	450	–	–
		–	110	115	137	150	250	150	400	–	–

(1) Minimum protection device size is the lowest rated device that supplies maximum protection without nuisance tripping.
(2) Maximum protection device size is the highest rated device that supplies drive protection. For US NEC, minimum size is 125% of motor FLA. Ratings that are shown are maximum.
(3) Circuit Breaker - inverse time breaker. For US NEC, minimum size is 125% of motor FLA. Ratings that are shown are maximum.
(4) Maximum allowable rating by US NEC. Exact size must be chosen for each installation.
(5) Motor Circuit Protector - instantaneous trip circuit breaker. For US NEC minimum size is 125% of motor/drive FLA. Ratings that are shown are suggested. Instantaneous trip settings must be set to US NEC code. Not to exceed 1300% FLA.

690 Volt AC Input Frames 9…14 Drive Protection Devices

Drive Catalog Number	Frame	kW Rating		Input Ratings	Dual Element Time Delay Fuse		Non-time Delay Fuse		Bussmann Style Semi-conductor Fuse	Circuit Breaker (5)	Motor Circuit Protector (7)
		ND	HD	Amps	Min (2)	Max (4)	Min (2)	Max (4)		Max (6)	Max (6)
20DF170	9	160	–	171	225	375	225	500	170M3819	500	250
		–	132	145	200	300	200	500	170M3819	400	200
20DF208	9	200	–	210	275	450	275	600	170M3819	600	300
		–	160	171	225	375	225	500	170M3819	500	250
20DF261	10	250	–	263	350	575	350	775	170M5813	750	350
		–	200	210	275	450	275	600	170M5813	600	300
20DF325	10	315	–	327	425	725	425	950	170M5813	900	450
		–	250	263	350	575	350	775	170M5813	750	400
20DF385	10	355	–	388	500	850	500	1100	170M5813	1100	500
		–	315	327	425	725	425	950	170M5813	900	450
20DF416	10	400	–	419	525	900	525	1200	170M5813	1200	550
		–	315	327	425	700	425	950	170M5813	900	450
20DF460	11	500	–	463	600 (1 per phs) 300 (2 per phs)	1000	600 (1 per phs) 300 (2 per phs)	1300	170M8547	1300	600
		–	400	388	500 (1 per phs) 250 (2 per phs)	850	500 (1 per phs) 250 (2 per phs)	1100	170M8547	1100	500
20DF502	11	560	–	506	650 (1 per phs) 325 (2 per phs)	1100	650 (1 per phs) 325 (2 per phs)	1500	170M8547	1500	650
		–	500	463	600 (1 per phs) 300 (2 per phs)	1000	600 (1 per phs) 300 (2 per phs)	1300	170M8547	1300	600
20DF590	11	580	–	594	750 (1 per phs) 375 (2 per phs)	1300	750 (1 per phs) 375 (2 per phs)	1700	170M5813	1700	800
		–	500	506	650 (1 per phs) 325 (2 per phs)	1100	650 (1 per phs) 325 (2 per phs)	1500	170M5813	1500	700
20DF650	12	630	–	655	850 (1 per phs) 425 (2 per phs)	1400	850 (1 per phs) 425 (2 per phs)	1900	170M5813	1900	900
		–	560	594	750 (1 per phs) 375 (2 per phs)	1300	750 (1 per phs) 375 (2 per phs)	1700	170M5813	1700	800

690 Volt AC Input Frames 9…14 Drive Protection Devices (continued)

Drive Catalog Number	Frame	kW Rating		Input Ratings	Dual Element Time Delay Fuse		Non-time Delay Fuse		Bussmann Style Semi-conductor Fuse	Circuit Breaker (5)	Motor Circuit Protector (7)
		ND	HD	Amps	Min (2)	Max (4)	Min (2)	Max (4)		Max (6)	Max (6)
20DF750	12	710	–	756	950 (1 per phs) 475 (2 per phs)	1600	950 (1 per phs) 475 (2 per phs)	2200	170M5813	2200	1000
		–	630	655	850 (1 per phs) 425 (2 per phs)	1400	850 (1 per phs) 425 (2 per phs)	1900	170M5813	1900	900
20DF820(1)	12	800	–	826	1100 (1 per phs) 550 (2 per phs)	1800	1100 (1 per phs) 550 (2 per phs)	2400	170M5813	2400	1100
		–	630	655	850 (1 per phs) 425 (2 per phs)	1400	850 (1 per phs) 425 (2 per phs)	1900	170M5813	1900	900
20DF920	13	900	–	927	1200 (1 per phs) 600 (2 per phs) (3)	2000 (3)	1200 (1 per phs) 600 (2 per phs) (3)	2700 (3)	170M6466 (3)	2700	1200
		–	800	826	1100 (1 per phs) 550 (2 per phs) (3)	1800 (3)	1100 (1 per phs) 550 (2 per phs) (3)	2400 (3)	170M6466 (3)	2400	1100
20DF1K0	13	1000	–	1038	1300 (1 per phs) 650 (2 per phs) (3)	2300 (3)	1300 (1 per phs) 650 (2 per phs) (3)	3000 (3)	170M6466 (3)	3000	1300
		–	900	927	1200 (1 per phs) 600 (2 per phs) (3)	2000 (3)	1200 (1 per phs) 600 (2 per phs) (3)	2700 (3)	170M6466 (3)	2700	1200
20DF1K1	13	1100	–	1189	1500 (1 per phs) 750 (2 per phs) (3)	2600 (3)	1500 (1 per phs) 750 (2 per phs) (3)	3500 (3)	170M6466 (3)	3500	1500
		–	1000	1038	1300 (1 per phs) 650 (2 per phs) (3)	2300 (3)	1300 (1 per phs) 650 (2 per phs) (3)	3000 (3)	170M6466 (3)	3000	1300
20DF1K5	14	1500	–	1511	1900 (1 per phs) 650 (3 per phs)	3300	1900 (1 per phs) 650 (3 per phs)	4500	170M6466	4500	1900
		–	1300	1310	1700 (1 per phs) 575 (3 per phs)	2900	1700 (1 per phs) 575 (3 per phs)	3900	170M6466	3900	1700

(1) 20DF820 drives (ND) are only capable of producing 95% of starting torque under 10 Hz.
(2) Minimum protection device size is the lowest rated device that supplies maximum protection without nuisance tripping.
(3) Fuses and disconnect are supplied with AC input NEMA/UL Type 1 drives.
(4) Maximum protection device size is the highest rated device that supplies drive protection. For US NEC, minimum size is 125% of motor FLA. Ratings that are shown are maximum.
(5) Circuit Breaker - inverse time breaker. For US NEC, minimum size is 125% of motor FLA. Ratings that are shown are maximum.
(6) Maximum allowable rating by US NEC. Exact size must be chosen for each installation.
(7) Motor Circuit Protector - instantaneous trip circuit breaker. For US NEC minimum size is 125% of motor/drive FLA. Ratings that are shown are suggested. Instantaneous trip settings must be set to US NEC code. Not to exceed 1300% FLA.

325 Volt DC Input Frames 1…6 Drive Protection Devices

Drive Catalog Number	Frame	HP Rating		DC Input Ratings	Fuse	Non-time Delay Fuse(3)
		ND	HD	Amps		
20DB015	1	5	3	16	30	HSJ30
20DB022	1	7.5	5	23.3	45	HSJ45
20DB028	2	10	7.5	30	60	HSJ60
20DB042	3	15	10	45	90	HSJ90
20DB052	3	20	15	55	100	HSJ100
20DB070	4	25	20	75.3	150	HSJ150
20DB080	4	30	25	85.8	175	HSJ175
20DN104(1)	5	40	30	114.1	225	HSJ225
20DN130(1)	5	50	40	142.6	250	HSJ250
20DN154(1)	6	60	50	169	300	HSJ300
20DN192(1)	6	75	60	210.6	400	HSJ400
20DN260(1)(2)	6	100	75	272.1	400	HSJ400

(1) Catalog number corresponds to output amps for these drives. Drive must be programmed to lower voltage to obtain higher currents that are shown at right.
(2) Catalog number corresponds to drives with precharge only.
(3) The power source to Common Bus inverters must be derived from AC Voltages 600V or less, as defined in NFPA70; Art 430-18 (NEC). Battery supplies or MG sets are not included. The following devices were validated to break current of the derived power DC Bus: *Disconnects*: Allen-Bradley Bulletin No. 1494, 30A to 400 A; Bulletin No. 194, 30A to 400 A, or ABB: OESA, 600 & 800 A; OESL, all sizes. *Fuses:* Ferraz Shawmut Type HSJ, all sizes. For any other devices, please contact the factory.

540 Volt DC Input Frames 1…6 Drive Protection Devices

Drive Catalog Number	Frame	kW Rating		DC Input Ratings	Fuse	Non-time Delay Fuse(2)
		ND	HD	Amps		
20DC3P5	1	1.5	1.1	3.7	8	JKS-8
20DC5P0	1	2.2	1.5	5.3	10	JKS-10
20DC8P7	1	4	3.0	9.3	15	HSJ15
20DC011	1	5.5	4	12.6	20	HSJ20
20DC015	1	7.5	5.5	16.8	25	HSJ25
20DC022	1	11	7.5	24	40	HSJ40
20DC030	2	15	11	33.2	50	HSJ50
20DC037	2	18.5	15	40.9	70	HSJ70
20DC043	3	22	18.5	47.5	90	HSJ90
20DC056	3	30	22	61.9	100	HSJ100
20DC072	3	37	30	80.5	125	HSJ125
20DC085	4	45	37	95.1	150	HSJ150
20DH105 (1)	5	55	–	120.2	175	HSJ175
		–	45	95.1	175	HSJ175
20DH125 (1)	5	55	–	120.2	200	HSJ200
		–	45	95.1	200	HSJ200
20DH140	5	75	–	159	250	HSJ250
		–	55	120.2	250	HSJ250
20DH170 (1)	6	90	–	192	350	HSJ350
		–	75	159	350	HSJ350
20DH205 (1)	6	110	–	226	350	HSJ350
		–	90	192	350	HSJ350
20DH260 (1)	6	132	–	298	400	HSJ400
		–	110	226	400	HSJ400

(1) Also applies to "P" voltage class. Fuses must be applied in the (+) leg and (-) leg of the DC Common Bus.

(2) The power source to Common Bus inverters must be derived from AC voltages 600V or less, as defined in NFPA70; Art 430-18 (NEC). Battery supplies or MG sets are not included. The following devices were validated to break current of the derived power DC Bus: *Disconnects*: Allen-Bradley Bulletin No. 1494, 30A to 400 A; Bulletin No. 194, 30A to 400 A, or ABB: OESA, 600 & 800 A; OESL, all sizes. *Fuses*: Bussmann Type JKS, all sizes; Type 170M, Case Sizes 1, 2 and 3, or Ferraz Shawmut Type HSJ, all sizes. For any other devices, please contact the factory.

540 Volt DC Input Frames 9…13 Drive Protection Devices

Drive Catalog Number	Frame	kW Rating		DC Input Ratings	Fuse	Bussmann Style Fuse
		ND	HD	Amps		
20DH261	9	132	-	307	500	170M6608
		-	110	241	500	170M6608
20DH300	9	160	-	353	630	170M6610
		-	132	288	630	170M6610
20DH385	10	200	-	453	700	170M6611
		-	160	353	700	170M6611
20DH460	10	250	-	541	900	170M6613
		-	200	453	900	170M6613
20DH500	10	250	-	589	500 (2 per phs)	170M6608
		-	250	494	500 (2 per phs)	170M6608
20DH590	11	315	-	695	550 (2 per phs)	170M6609
		-	250	612	550 (2 per phs)	170M6609
20DH650	11	355	-	765	630 (2 per phs)	170M6610
		-	315	695	630 (2 per phs)	170M6610
20DH730	11	400	-	859	700 (2 per phs)	170M6611
		-	355	765	700 (2 per phs)	170M6611
20DH820	12	450	-	965	700 (2 per phs)	170M6611
		-	400	859	700 (2 per phs)	170M6611
20DH920	12	500	-	1083	550 (3 per phs)	170M6609
		-	450	965	550 (3 per phs)	170M6609
20DH1K0	12	560	-	1213	630 (3 per phs)	170M6610
		-	500	1083	630 (3 per phs)	170M6610
20DH1K1	13	630	-	1354	2400	170M7107
		-	560	1213	2400	170M7107
20DH1K3	13	710	-	1530	2400	170M7107
		-	630	1354	2400	170M7107
20DH1K4	13	800	-	1707	2400	170M7107
		-	710	1413	2400	170M7107

650 Volt DC Input Frames 1…6 Drive Protection Devices

Drive Catalog Number	Frame	HP Rating		DC Input Ratings	Fuse	Non-time Delay Fuse(2)
		ND	HD	Amps		
20DD2P1	1	1	0.75	1.9	6	JKS-6
20DD3P4	1	2	1.5	3.0	6	JKS-6
20DD5P0	1	3	2	4.5	10	JKS-10
20DD8P0	1	5	3	8.1	15	HSJ15
20DD011	1	7.5	5	11.1	20	HSJ20
20DD014	1	10	7.5	14.6	30	HSJ30
20DD022	1	15	10	23.3	40	HSJ40
20DD027	2	20	15	28.9	50	HSJ50
20DD034	2	25	20	36.4	60	HSJ60
20DD040	3	30	25	42.9	80	HSJ80
20DD052	3	40	30	55.7	90	HSJ90
20DD065	3	50	40	69.6	100	HSJ100
20DD077	4	60	50	84.5	150	HSJ150
20DJ096 (1)	5	75	–	105.3	175	HSJ175
		–	60	84.5	175	HSJ175
20DJ125 (1)	5	100	–	137.1	200	HSJ200
		–	75	105.3	200	HSJ200
20DJ156 (1)	6	125	–	171	300	HSJ300
		–	100	137.1	300	HSJ300
20DJ180 (1)	6	150	–	198	400	HSJ400
		–	125	171.2	400	HSJ400
20DJ248 (1)	6	200	–	272	400	HSJ400
		–	150	198	400	HSJ400

(1) Also applies to "R" voltage class. Fuses must be applied in the (+) leg and (-) leg of the DC Common Bus.

(2) The power source to Common Bus inverters must be derived from AC Voltages 600V or less, as defined in NFPA70; Art 430-18 (NEC). Battery supplies or MG sets are not included. The following devices were validated to break current of the derived power DC Bus: *Disconnects*: Allen-Bradley Bulletin No. 1494, 30 A to 400 A; Bulletin No. 194, 30 A to 400 A, or ABB: OESA, 600 & 800 A; OESL, all sizes. *Fuses*: Bussmann Type JKS, all sizes; Type 170M, Case Sizes 1, 2 and 3, or Ferraz Shawmut Type HSJ, all sizes. For any other devices, please contact the factory.

650 Volt DC Input Frames 9…13 Drive Protection Devices

Drive Catalog Number	Frame	HP Rating		DC Input Ratings	Fuse	Bussmann Style Fuse
		ND	HD	Amps		
20DJ261	9	200	-	294	500	170M6608
		-	150	231	500	170M6608
20DJ300	9	250	-	338	630	170M6610
		-	200	294	630	170M6610
20DJ385	10	300	-	434	700	170M6611
		-	250	338	700	170M6611
20DJ460	10	350	-	519	900	170M6613
		-	300	434	900	170M6613
20DJ500	10	450	-	564	500 (2 per phs)	170M6608
		-	350	474	500 (2 per phs)	170M6608
20DJ590	11	500	-	666	550 (2 per phs)	170M6609
		-	450	587	550 (2 per phs)	170M6609
20DJ650	11	500	-	733	630 (2 per phs)	170M6610
		-	500	666	630 (2 per phs)	170M6610
20DJ730	11	600	-	824	700 (2 per phs)	170M6611
		-	500	733	700 (2 per phs)	170M6611
20DJ820	12	700	-	925	700 (2 per phs)	170M6611
		-	600	824	700 (2 per phs)	170M6611
20DJ920	12	800	-	1038	550 (3 per phs)	170M6609
		-	700	925	550 (3 per phs)	170M6609
20DJ1K0	12	900	-	1162	630 (3 per phs)	170M6610
		-	800	1038	630 (3 per phs)	170M6610
20DJ1K1	13	1000	-	1297	2400	170M7107
		-	900	1162	2400	170M7107
20DJ1K3	13	1200	-	1467	2400	170M7107
		-	1000	1297	2400	170M7107
20DJ1K4	13	1250	-	1636	2400	170M7107
		-	1000	1354	2400	170M7107

810 Volt DC Input Frames 1…6 Drive Protection Devices

Drive Catalog Number	Frame	HP Rating		DC Input Ratings	Fuse	Non-time Delay Fuse(1)
		ND	HD	Amps		
20DE1P7	1	1	0.75	1.5	3	JKS-3
20DE2P7	1	2	1.5	2.4	6	JKS-6
20DE3P9	1	3	2	3.5	6	JKS-6
20DE6P1	1	5	3	6.2	10	JKS-10
20DE9P0	1	7.5	5	9.1	15	HSJ15
20DE011	1	10	7.5	11.5	20	HSJ20
20DE017	1	15	10	18	30	HSJ30
20DE022	2	20	15	23.6	40	HSJ40
20DE027	2	25	20	29	50	HSJ50
20DE032	3	30	25	34.3	60	HSJ60
20DE041	3	40	30	43.9	70	HSJ70
20DE052	3	50	40	55.7	90	HSJ90
20DE062	4	60	50	68.0	125	HSJ125
20DT099	5	100	–	108.6	150	HSJ150
		–	75	84.5	150	HSJ150
20DT144	6	150	–	158	200	HSJ200
		–	125	137.1	200	HSJ200

(1) The power source to Common Bus inverters must be derived from AC Voltages 600V or less, as defined in NFPA70; Art 430-18 (NEC). Battery supplies or MG sets are not included. The following devices were validated to break current of the derived power DC Bus: *Disconnects*: Allen-Bradley Bulletin No. 1494, 30A to 400 A; Bulletin No. 194, 30 A to 400 A, or ABB: OESA, 600 & 800 A; OESL, all sizes. *Fuses*: Bussmann Type JKS, all sizes; Type 170M, Case Sizes 1, 2 and 3, or Ferraz Shawmut Type HSJ, all sizes. For any other devices, please contact the factory.

810 Volt DC Input Frames 9…14 Drive Protection Devices

Drive Catalog Number	Frame	HP Rating		DC Input Ratings	Fuse	Bussmann Style Fuse
		ND	HD	Amps		
20DK170	9	150	–	192	400	170M5608
		–	150	162	400	170M5608
20DK208	9	200	–	235	450	170M5609
		–	150	192	450	170M5609
20DK261	10	250	–	294	450	170M5609
		–	200	235	450	170M5609
20DK325	10	350	–	367	550	170M6609
		–	250	294	550	170M6609
20DK385	10	400	–	434	700	170M6611
		–	350	367	700	170M6611
20DK416	10	450	–	469	800	170M6612
		–	350	367	800	170M6612
20DK460	11	500	–	519	450 (2 per phs)	170M5609
		–	400	434	450 (2 per phs)	170M5609
20DK502	11	500	–	566	500 (2 per phs)	170M6608
		–	500	519	500 (2 per phs)	170M6608
20DK590	11	600	–	666	500 (2 per phs)	170M6608
		–	500	566	500 (2 per phs)	170M6608
20DK650	12	700	–	733	500 (2 per phs)	170M6608
		–	650	666	500 (2 per phs)	170M6608
20DK750	12	800	–	846	630 (2 per phs)	170M6610
		–	700	733	630 (2 per phs)	170M6610
20DK820 (1)	12	900	–	925	630 (2 per phs)	170M6610
		–	700	733	630 (2 per phs)	170M6610
20DK920	13	1000	–	1038	2400	170M7107
		–	900	925	2400	170M7107
20DK1K0	13	1100	–	1162	2400	170M7107
		–	1000	1038	2400	170M7107
20DK1K1	13	1300	–	1331	2400	170M7107
		–	1100	1162	2400	170M7107
20DK1K5	14	1600	–	1692	–	170M8610
		–	1400	1467	–	170M8610

(1) 20DK820 drives (ND) are only capable of producing 95% of starting torque under 10 Hz.

932 Volt DC Input Frames 5 & 6 Drive Protection Devices

Drive Catalog Number	Frame	kW Rating		DC Input Ratings	Fuse	Non-time Delay Fuse(1)
		ND	HD	Amps		
20DW098	5	90	–	92.3	160	HSJ160
		–	75	92.3	160	HSJ160
20DW142	6	132	–	162.2	250	HSJ250
		–	110	134.9	250	HSJ250

(1) The power source to Common Bus inverters must be derived from AC Voltages 600V or less, as defined in NFPA70; Art 430-18 (NEC). Battery supplies or MG sets are not included. The following devices were validated to break current of the derived power DC Bus: *Disconnects*: Allen-Bradley Bulletin No. 1494, 30A to 400 A; Bulletin No. 194, 30A to 400 A, or ABB: OESA, 600 & 800 A; OESL, all sizes. *Fuses*: Bussmann Type JKS, all sizes; Type 170M, Case Sizes 1, 2 and 3, or Ferraz Shawmut Type HSJ, all sizes. For any other devices, please contact the factory.

932 Volt DC Input Frames 9…14 Drive Protection Devices

Drive Catalog Number	Frame	kW Rating		DC Input Ratings	Fuse	Bussmann Style Fuse
		ND	HD	Amps		
20DM170	9	160	–	200	315	170M3746
		–	132	170	315	170M3746
20DM208	9	200	–	245	400	170M5742
		–	160	200	400	170M5742
20DM261	10	250	–	307	500	170M5744
		–	200	245	500	170M5744
20DM325	10	315	–	383	630	170M5746
		–	250	307	630	170M5746
20DM385	10	355	–	453	700	170M6745
		–	315	383	700	170M6745
20DM416	10	400	–	490	700	170M6745
		–	315	383	700	170M6745
20DM460	11	450	–	542	450 (2 per phs)	170M5743
		–	355	453	450 (2 per phs)	170M5743
20DM502	11	500	–	591	500 (2 per phs)	170M5744
		–	400	542	500 (2 per phs)	170M5744
20DM590	11	560	–	695	500 (2 per phs)	170M5744
		–	500	591	500 (2 per phs)	170M5744
20DM650	12	630	–	765	550 (2 per phs)	170M5745
		–	560	695	550 (2 per phs)	170M5745
20DM750	12	710	–	883	630 (2 per phs)	170M5746
		–	630	765	630 (2 per phs)	170M5746
20DM820[(1)]	12	800	–	965	630 (2 per phs)	170M5746
		–	630	765	630 (2 per phs)	170M5746
20DM920	13	900	–	1038	2400	170M7107
		–	800	925	2400	170M7107
20DM1K0	13	1000	–	1162	2400	170M7107
		–	900	1038	2400	170M7107
20DM1K1	13	1100	–	1331	2400	170M7107
		–	1000	1162	2400	170M7107
20DM1K5	14	1500	–	1766	–	170M8610
		–	1300	1530	–	170M8610

(1) 20DM820 drives (ND) are only capable of producing 95% of starting torque under 10 Hz.

Drive Mounting Clearances and Dimensions

Minimum Mounting Clearances

Frames 1…6

Specified vertical clearance requirements are intended to be from the drive to the closest object that can restrict airflow through the drive heat sink and chassis. The drive must be mounted in a vertical orientation as shown, and must make full contact with the mounting surface. Do not use standoffs or spacers. In addition, inlet air temperature must not exceed the product specification.

Note: See the "Drive Fuse and Circuit Breaker Ratings" tables beginning on page 62 for information on drive ambient operating temperatures.

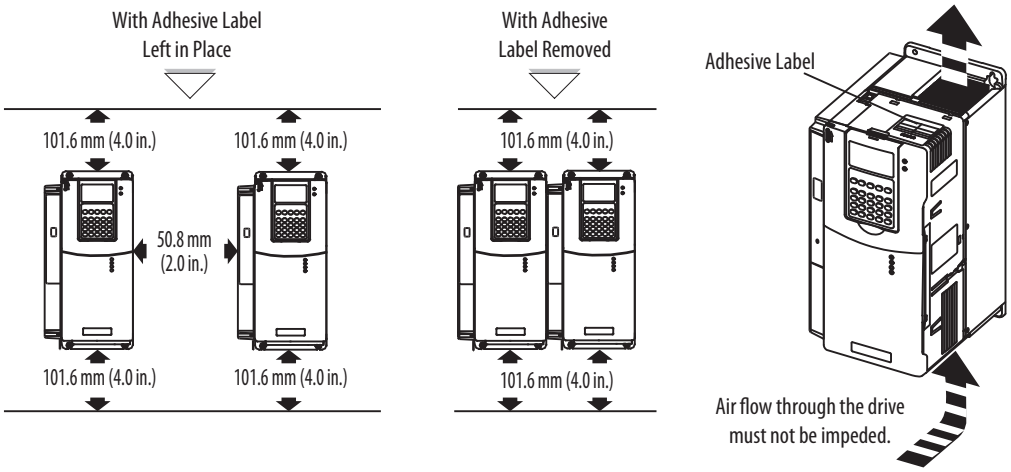

Frame 9

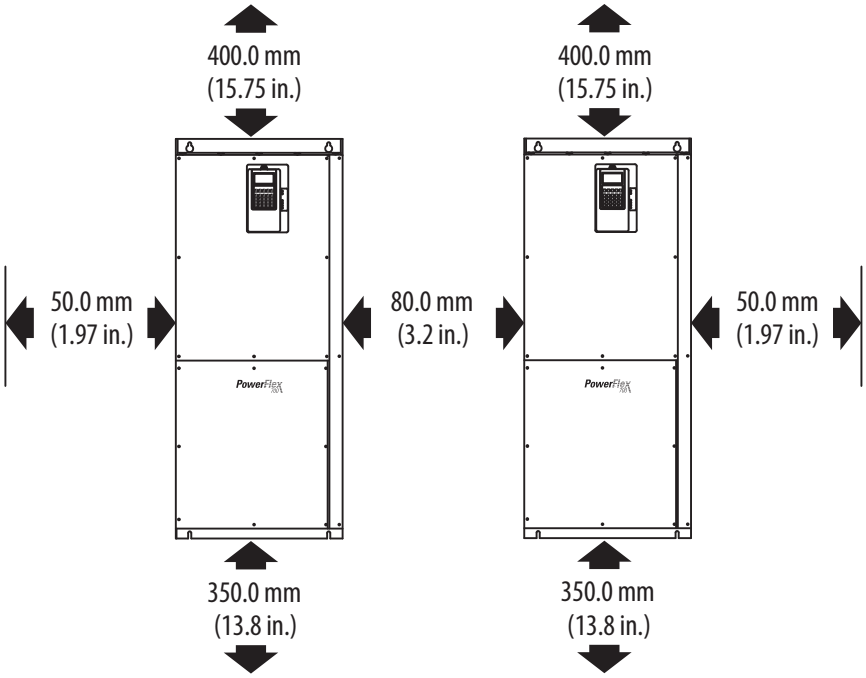

Minimum Mounting Clearances, Continued

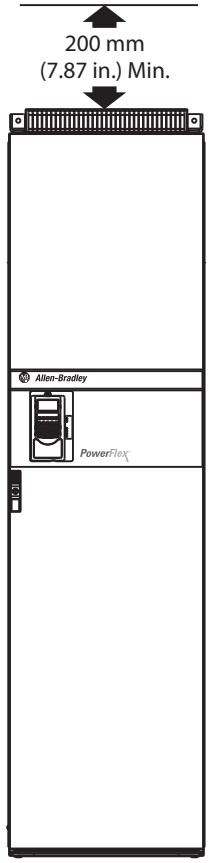

Frames 10…14 (NEMA/UL Type 1 - IP21 Enclosure (Frame 10 shown)

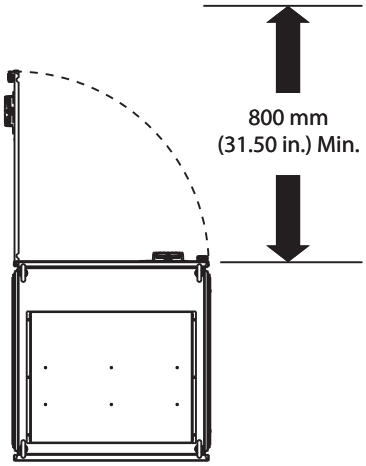

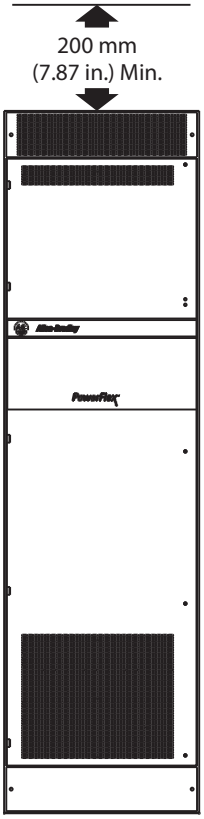

Frames 10…12 (NEMA/UL Type 1 - IP20 MCC Enclosure (Frame 10 shown)

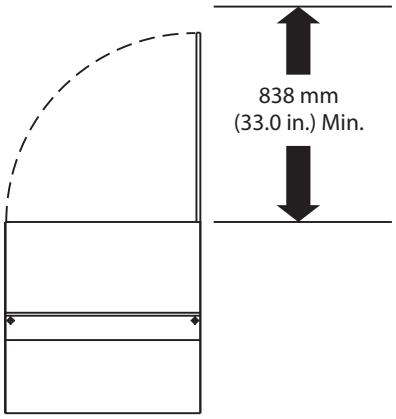

Approximate Dimensions

Frames 1…3 (Frame 1 Shown)

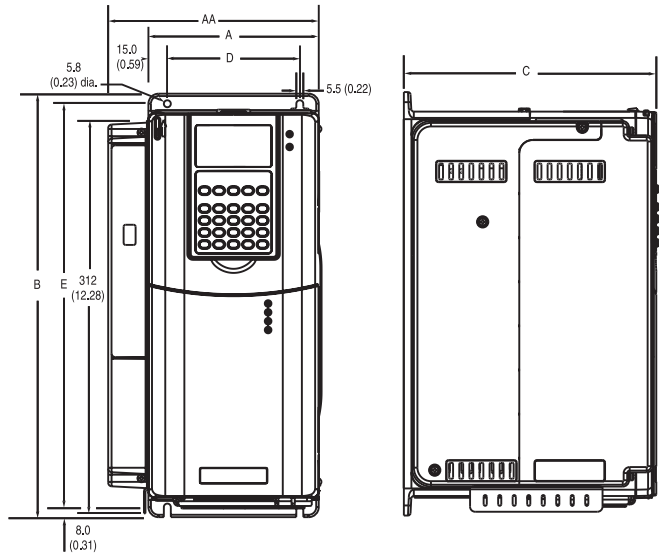

Frame 1 (Bottom View)

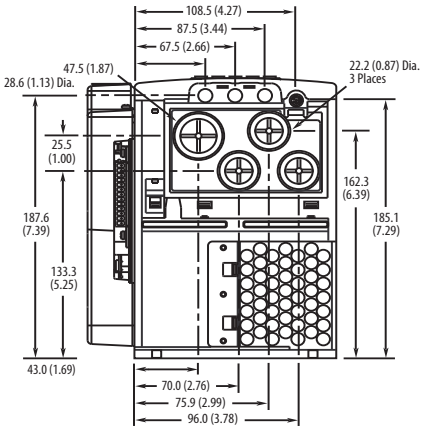

Frame 2 (Bottom View)

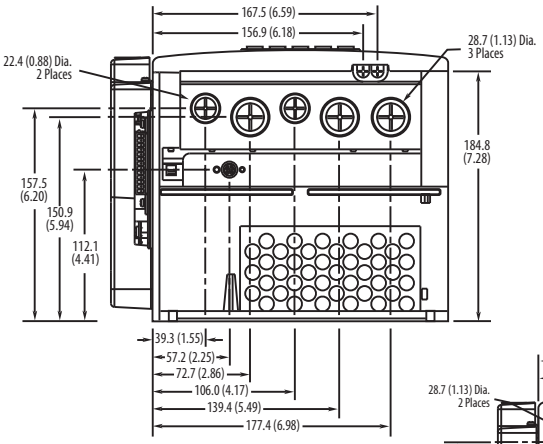

Frame 3 - All Drives *except* 50 HP, 480V (37 kW, 400V)

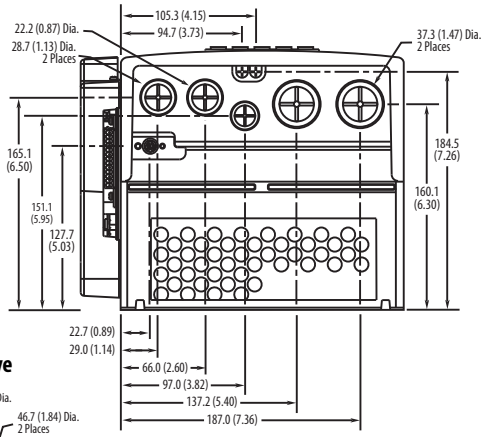

Frame 3 - 50 HP, 480V (37 kW, 400V) Normal Duty Drive

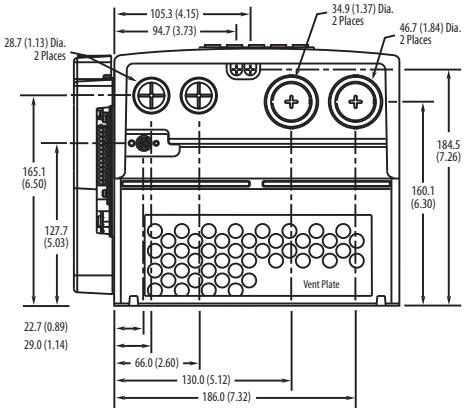

Dimensions are in millimeters and (inches)

Frame (1)	Slim A *(Max)*	Expanded AA	B	C *(Max)*	D	E	Weight (2) *kg (lbs.)*	
							Drive	Drive and Packaging
1	135.0 (5.31)	166.9 (6.57)	336.0 (13.23)	200.0 (7.87)	105.0 (4.13)	320.0 (12.60)	7.03 (15.5)	9.98 (22)
2	222.0 (8.74)	253.9 (9.99)	342.5 (13.48)	200.0 (7.87)	192.0 (7.56)	320.0 (12.60)	12.52 (27.6)	15.20 (33.5)
3	222.0 (8.74)	253.9 (9.99)	517.5 (20.37)	200.0 (7.87)	192.0 (7.56)	500.0 (19.69)	18.55 (40.9)	22.68 (50)

(1) See the Drive Ratings tables on page 48 for frame information.
(2) Weights include HIM, DriveLogix controller with ControlNet daughtercard, Hi-Resolution Encoder Option, and 20-COMM-C ControlNet adapter.

Frame 4

Dimensions are in millimeters and (inches)

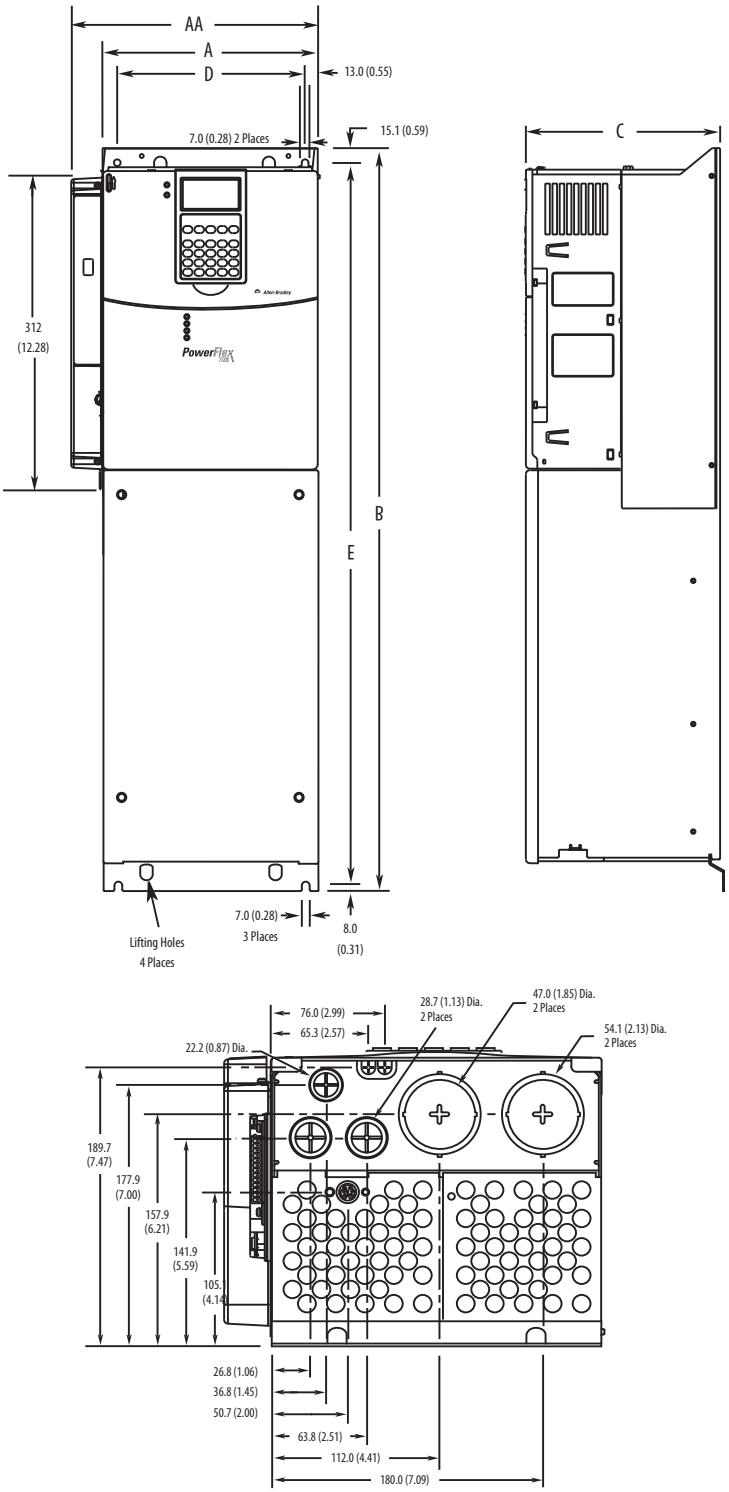

Frame [1]	Slim A *(Max)*	Expanded AA	B	C *(Max)*	D	E	Weight [2] *kg (lbs.)*	
							Drive	Drive and Packaging
4	220.0 (8.66)	251.9 (9.92)	758.8 (29.87)	201.7 (7.94)	192.0 (7.56)	738.2 (29.06)	24.49 (54.0)	29.03 (64.0)

(1) See the Drive Ratings tables on page 48 for frame information.
(2) Weights include HIM, DriveLogix controller with ControlNet daughtercard, Hi-Resolution Encoder Option, and 20-COMM-C ControlNet adapter.

Frame 5, 40 Hp or 75 Hp

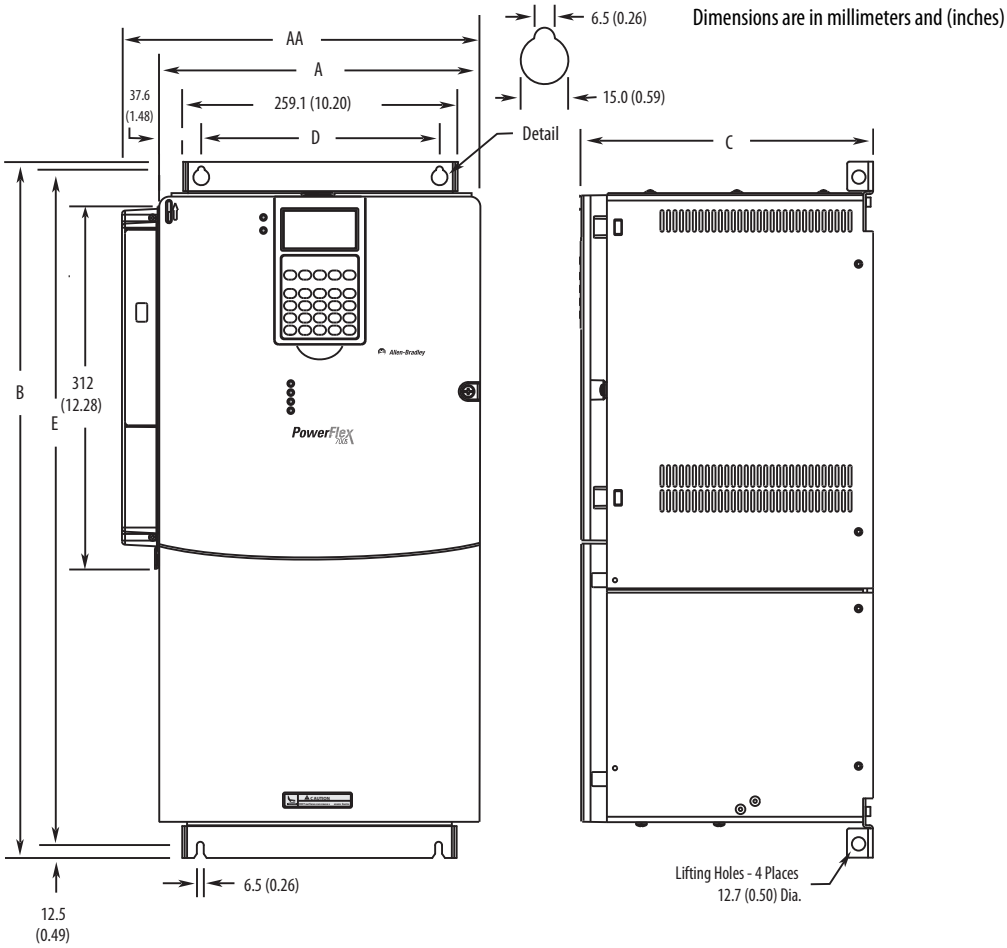

Drawings apply to:

30 kW, 208V (40 Hp, 240V)

55 kW, 400V (75 Hp, 480V)

45/55/75 kW, 690V (75 Hp, 600V)

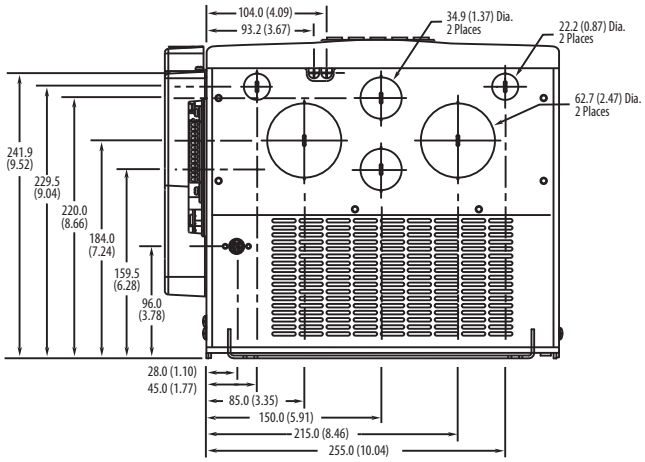

Frame [1]	Slim A *(Max)*	Expanded AA	B	C *(Max)*	D	E	Weight [2] *kg (lbs.)*	
							Drive	Drive and Packaging
5	308.0 (12.16)	339.9 (13.38)	644.5 (25.37)	275.4 (10.84)	225.0 (8.86)	625.0 (24.61)	37.19 (82.0)	42.18 (93.0)

(1) See the Drive Ratings tables on page 48 for frame information.

(2) Weights include HIM, DriveLogix controller with ControlNet daughtercard, Hi-Resolution Encoder Option, and 20-COMM-C ControlNet adapter.

Frame 5, 75 Hp or 100 Hp

Dimensions are in millimeters and (inches)

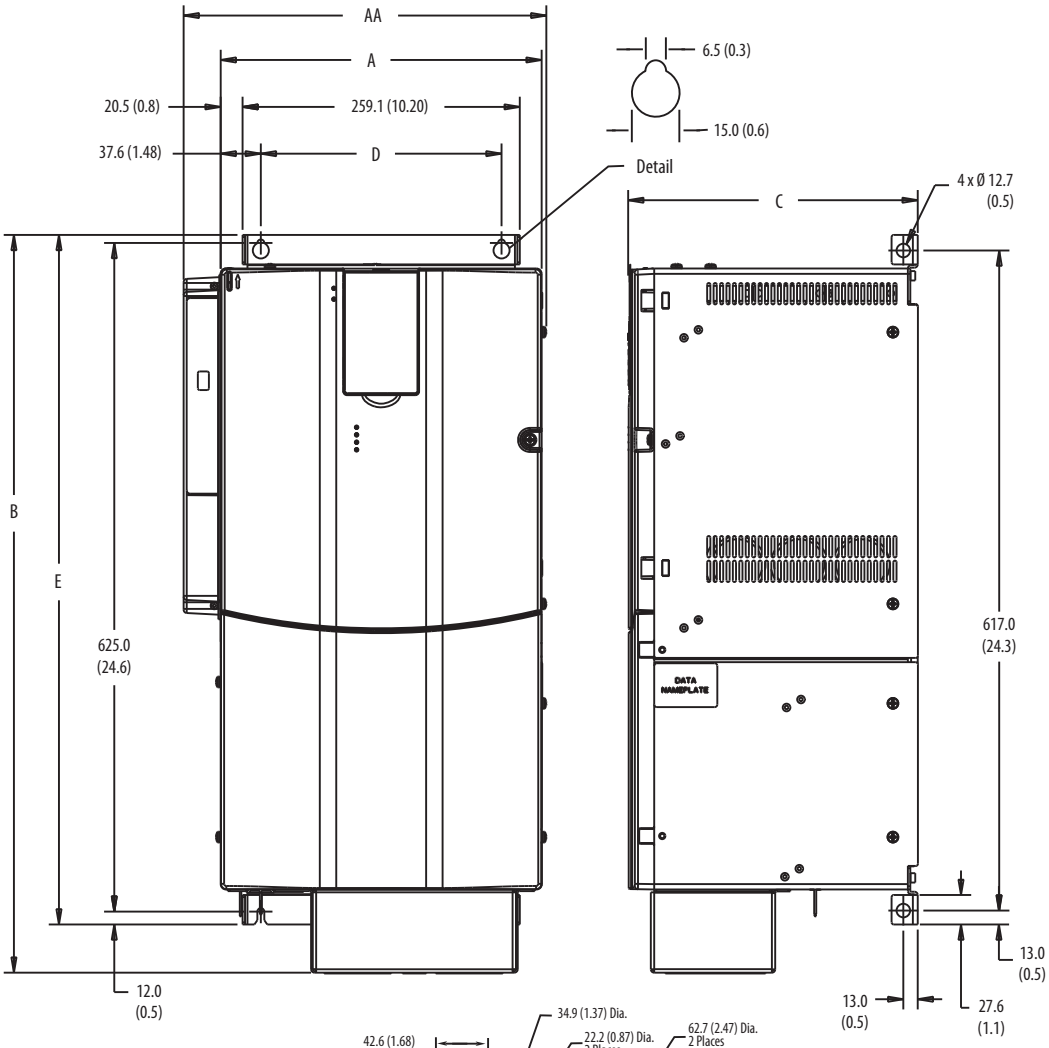

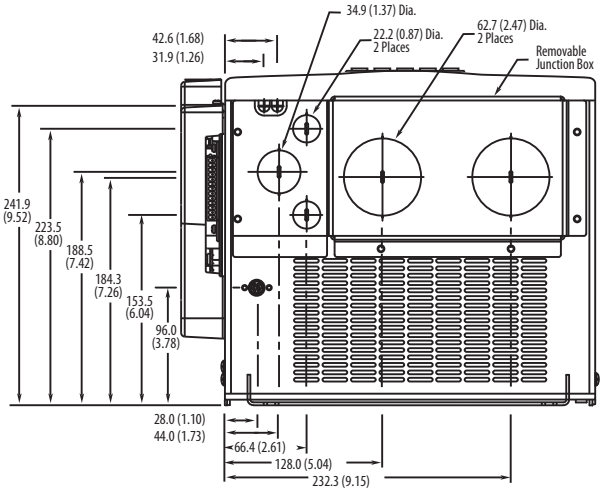

Drawings apply to:
37 kW, 208V (50 Hp, 240V)
75 kW, 400V (100 Hp, 480V)
90kW, 690V (100 Hp, 600V)

Frame (1)	**Slim Cassette A** *(Max)*	**Expanded Cassette AA**	**B** (2)	**C** *(Max)*	**D**	**E**	**Weight** (3) *kg (lbs.)*	
							Drive	**Drive and Packaging**
5	308.9 (12.2)	340.8 (13.4)	689.6 (27.1)	270.35 (10.6)	225.0 (8.9)	644.5 (25.4)	37.19 (82.0)	42.18 (93.0)

(1) See the Drive Ratings tables on page 48 for frame information.
(2) When using the supplied junction box (100 HP drives only), add an additional 45.1 mm (1.78 in.) to this dimension.
(3) Weights include HIM, DriveLogix controller with ControlNet daughtercard, Hi-Resolution Encoder Option, and 20-COMM-C ControlNet adapter.

Frame 6

Dimensions are in millimeters and (inches)

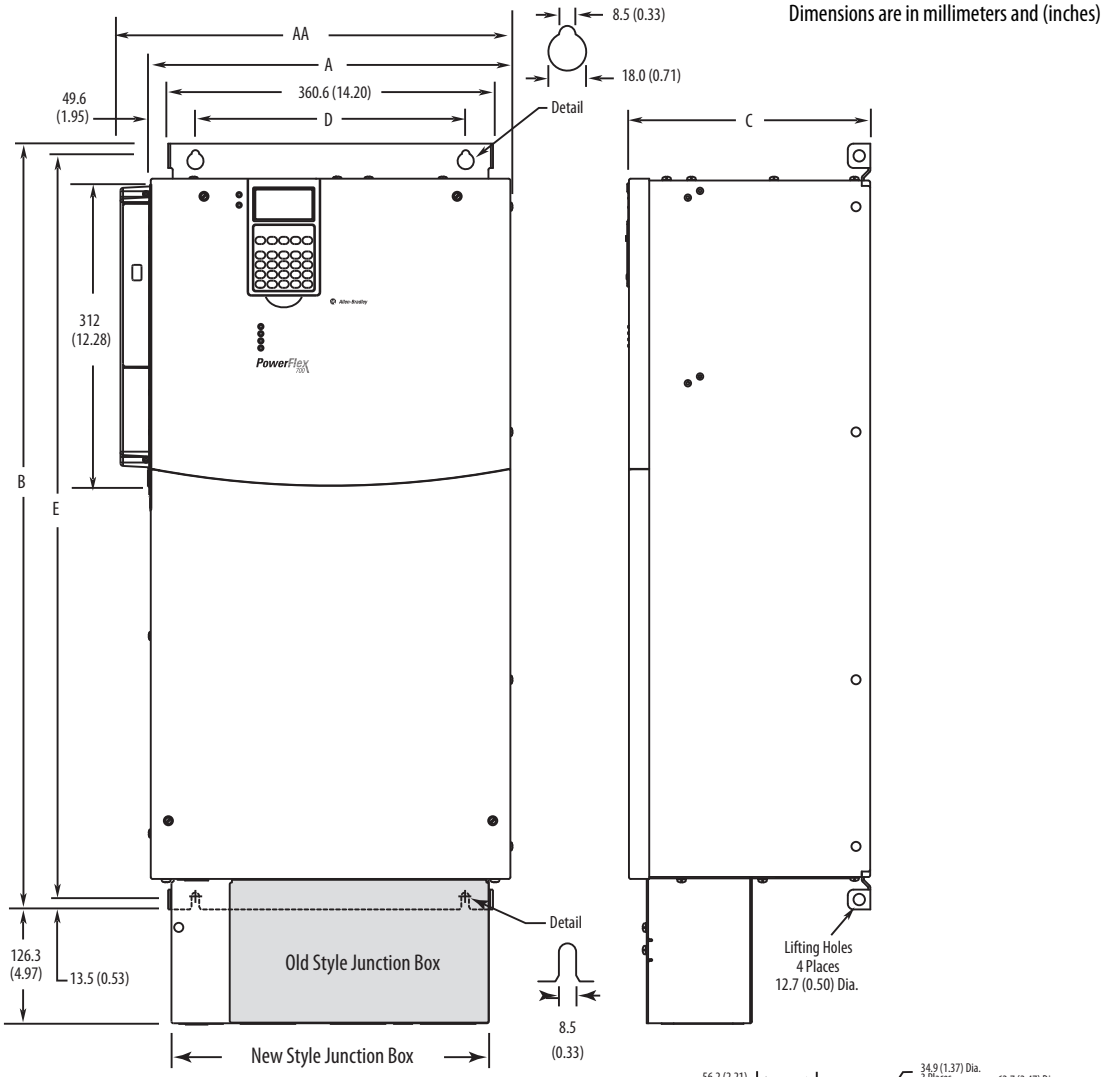

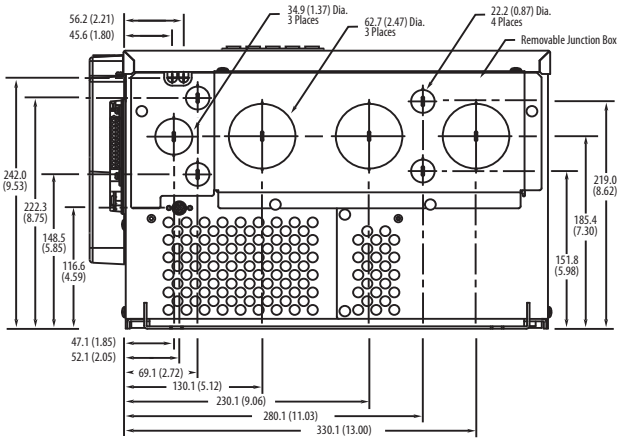

Frame (1)	**Slim** **A** *(Max)*	**Expanded** **AA**	**B** (2)	**C** *(Max)*	**D**	**E**	**Approx. Weight** (3) *kg (lbs.)* **Drive**
6	403.9 (15.90)	435.8 (17.16)	850.0 (33.46)	275.5 (10.85)	300.0 (11.81)	825.0 (32.48)	71.44 (157.5) (4)

(1) See the Drive Ratings tables on page 48 for frame information.
(2) Junction Box can be removed if drive is mounted in a cabinet.
(3) Weights include HIM and Standard I/O.
(4) Add an additional 3.6 kg (8.00 lbs.) for 200 HP drives.

Frame 9

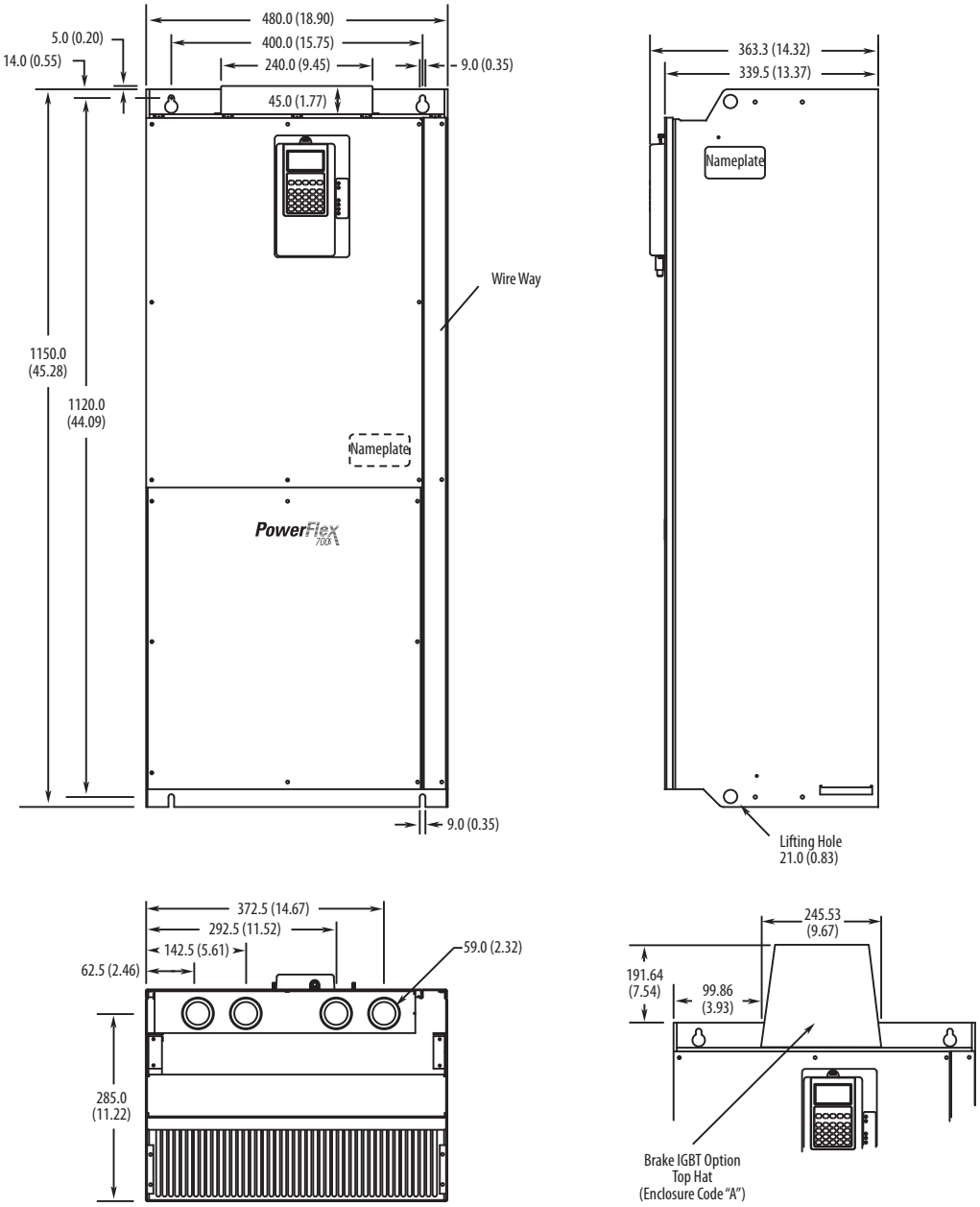

Dimensions are in millimeters and (inches).

Type	Weight kg (lbs.)
400V/480V AC, 261 Amp Drive and Enclosure	143 (315)
400V/480V AC, 300 Amp Drive and Enclosure	151 (333)
540/650V DC, 261 Amp Drive and Enclosure	109 (240)
540/650V DC, 300 Amp Drive and Enclosure	117 (257)
600/690V AC Drive and Enclosure	143 (315)
810/932V DC Drive and Enclosure	109 (240)

Frame 10, NEMA/UL Type 1, IP21 (Enclosure Code "A")

Dimensions are in millimeters and (inches).

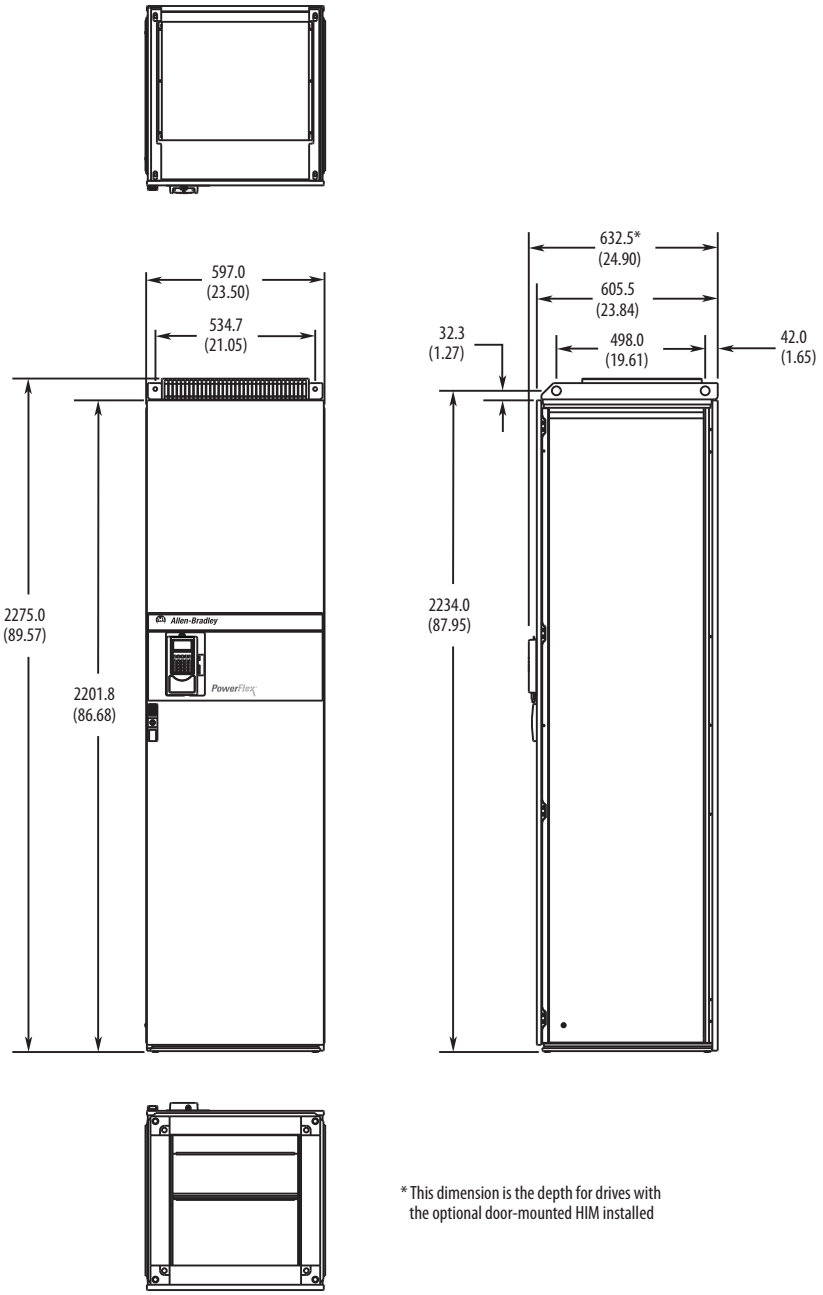

* This dimension is the depth for drives with the optional door-mounted HIM installed

Frame 10, NEMA/UL Type 1, IP20 (Enclosure Code "B")

Dimensions are in millimeters and (inches).

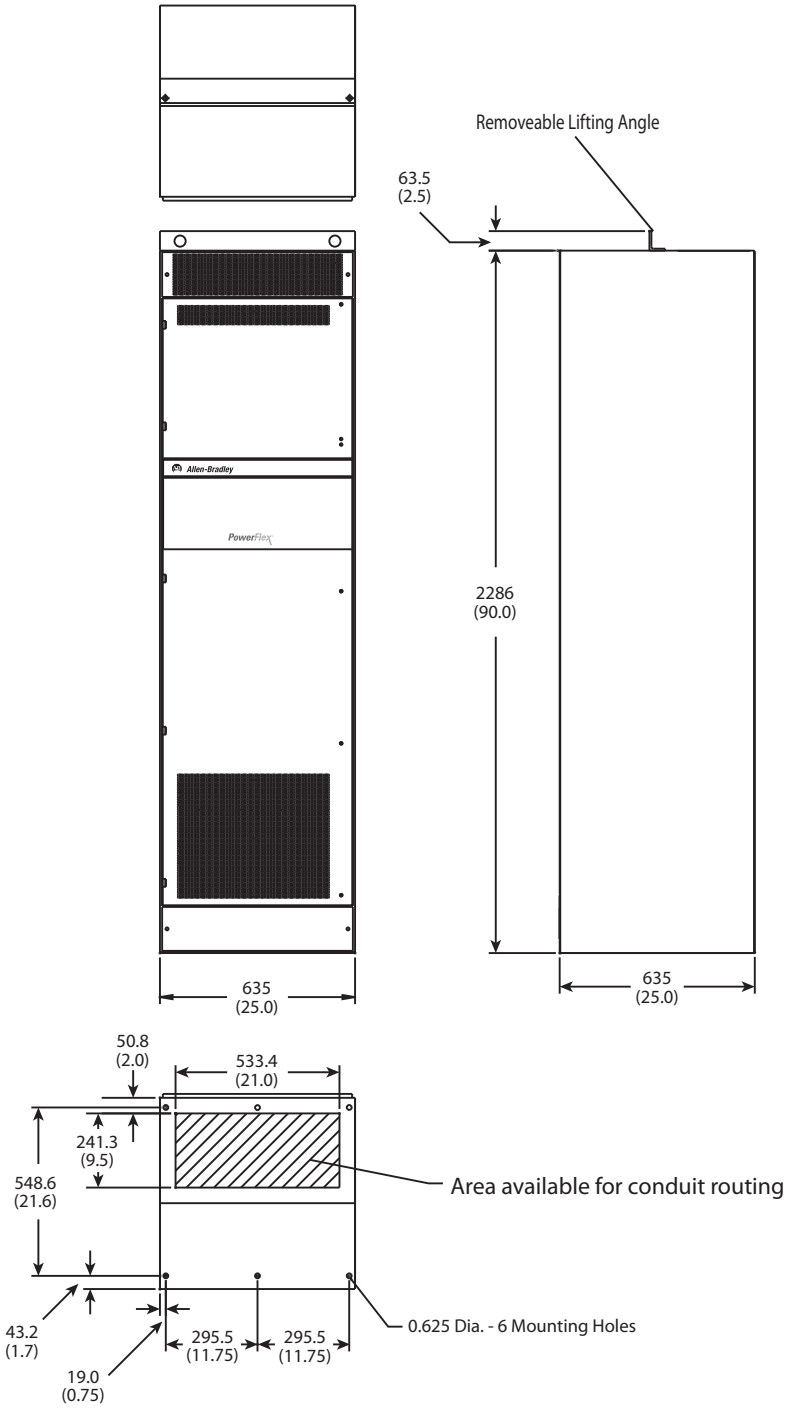

Frame 10, NEMA/UL Type 12, IP54 (Enclosure Code "H")

Dimensions are in millimeters and (inches).

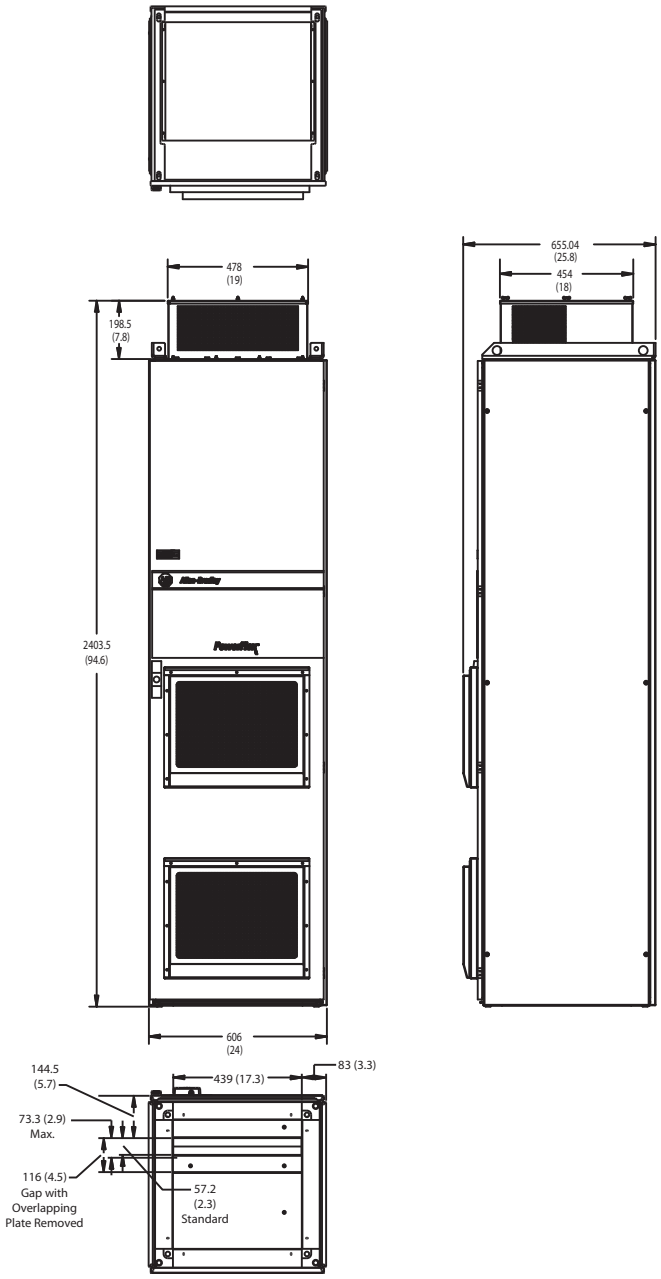

Frame 10 Drive Weights

Voltage Class	Drive Rating Amps	Approx. Weight kg (lbs.) Drive and Enclosure (AC Input)	Approx. Weight kg (lbs.) Drive and Enclosure (DC Input)
400/480V AC (540/650V DC)	385	432 (952)	317 (699)
	460	432 (952)	317 (699)
	520	432 (952)	317 (699)
600/690V AC (810/932V DC)	261	370 (816)	317 (699)
	325	401 (884)	317 (699)
	385	401 (884)	317 (699)
	416	401 (884)	317 (699)

Frame 11, NEMA/UL Type 1, IP21 (Enclosure Code "A")

Dimensions are in millimeters and (inches).

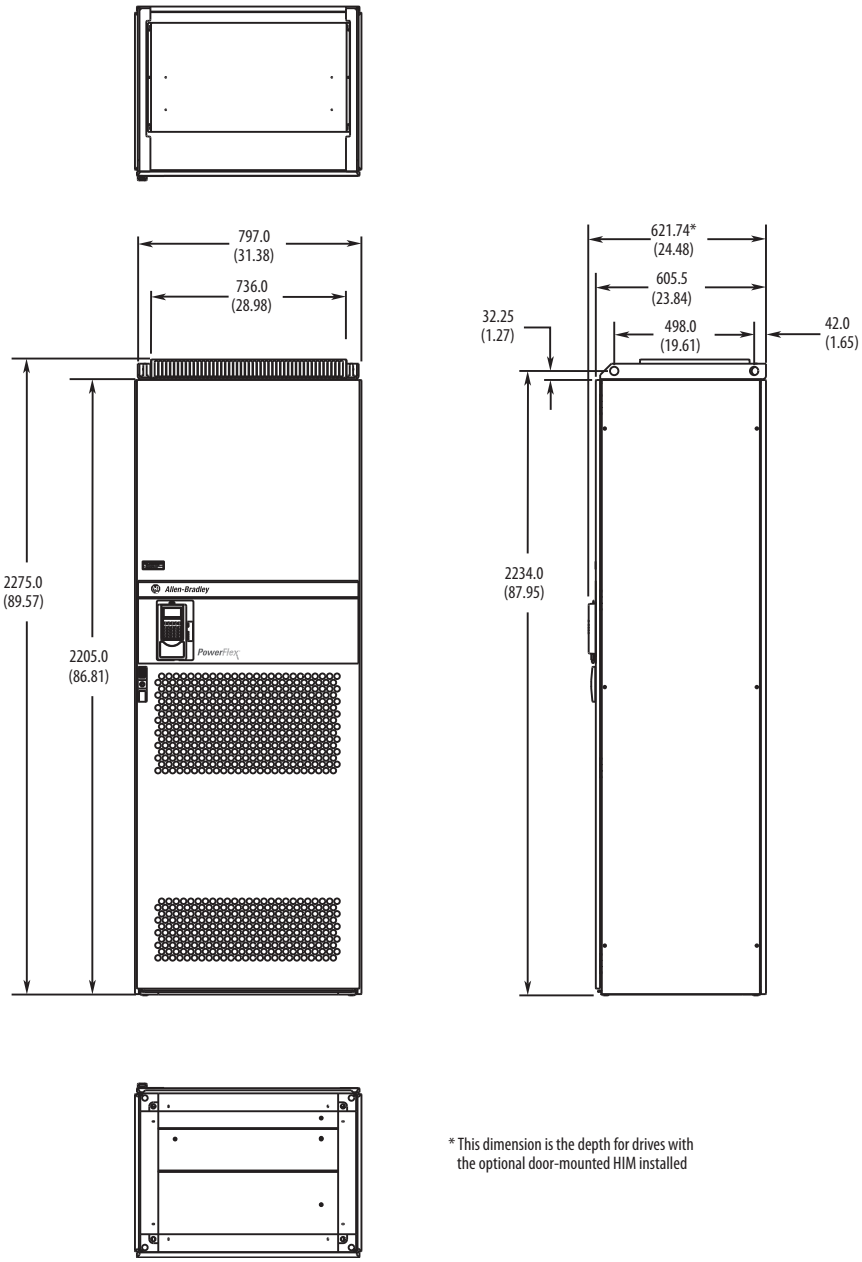

* This dimension is the depth for drives with the optional door-mounted HIM installed

Frame 11, NEMA/UL Type 1, IP20 (Enclosure Code "B")

Dimensions are in millimeters and (inches).

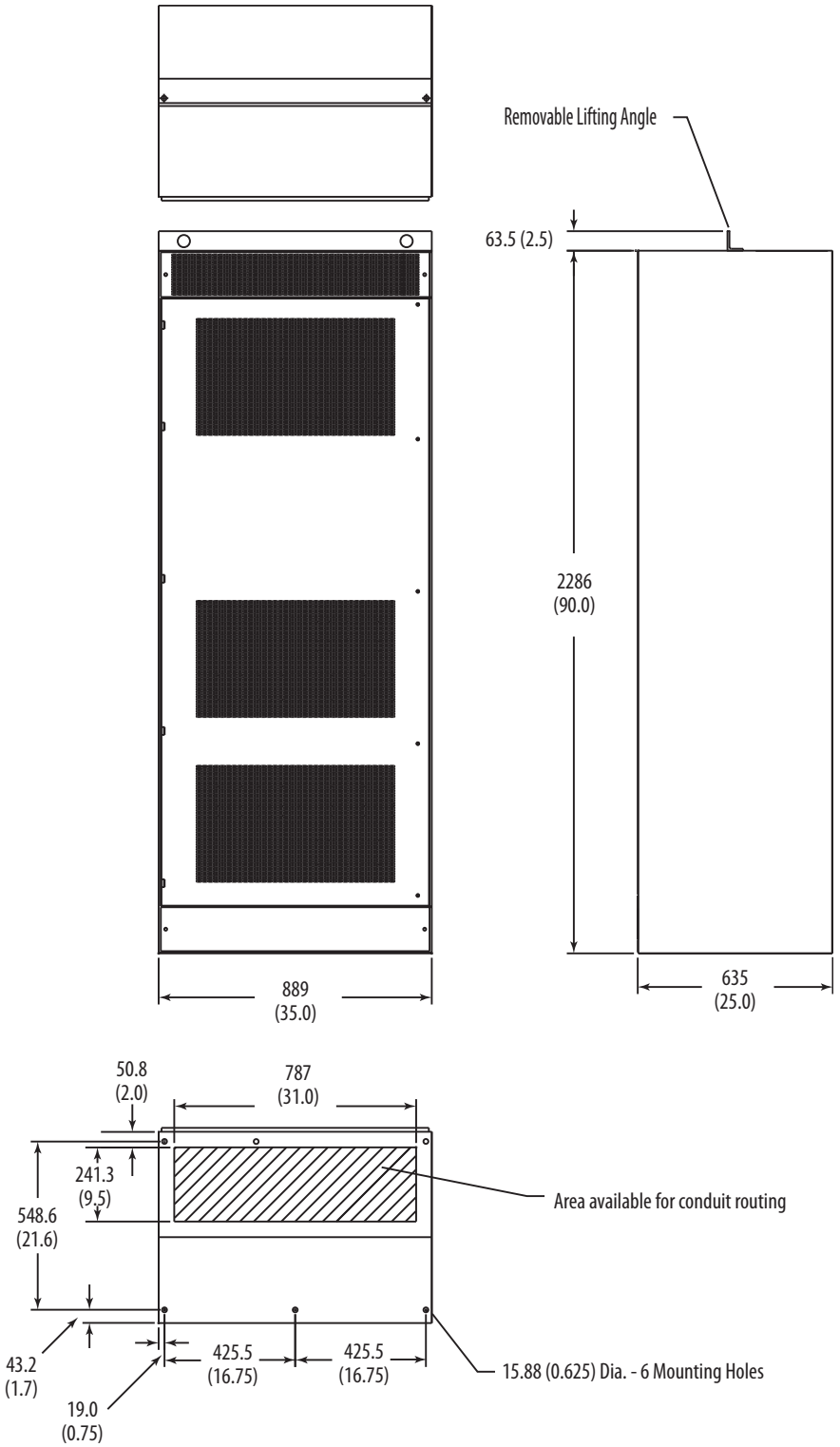

Frame 11, NEMA/UL Type 12, IP54 (Enclosure Code "H")

Dimensions are in millimeters and (inches).

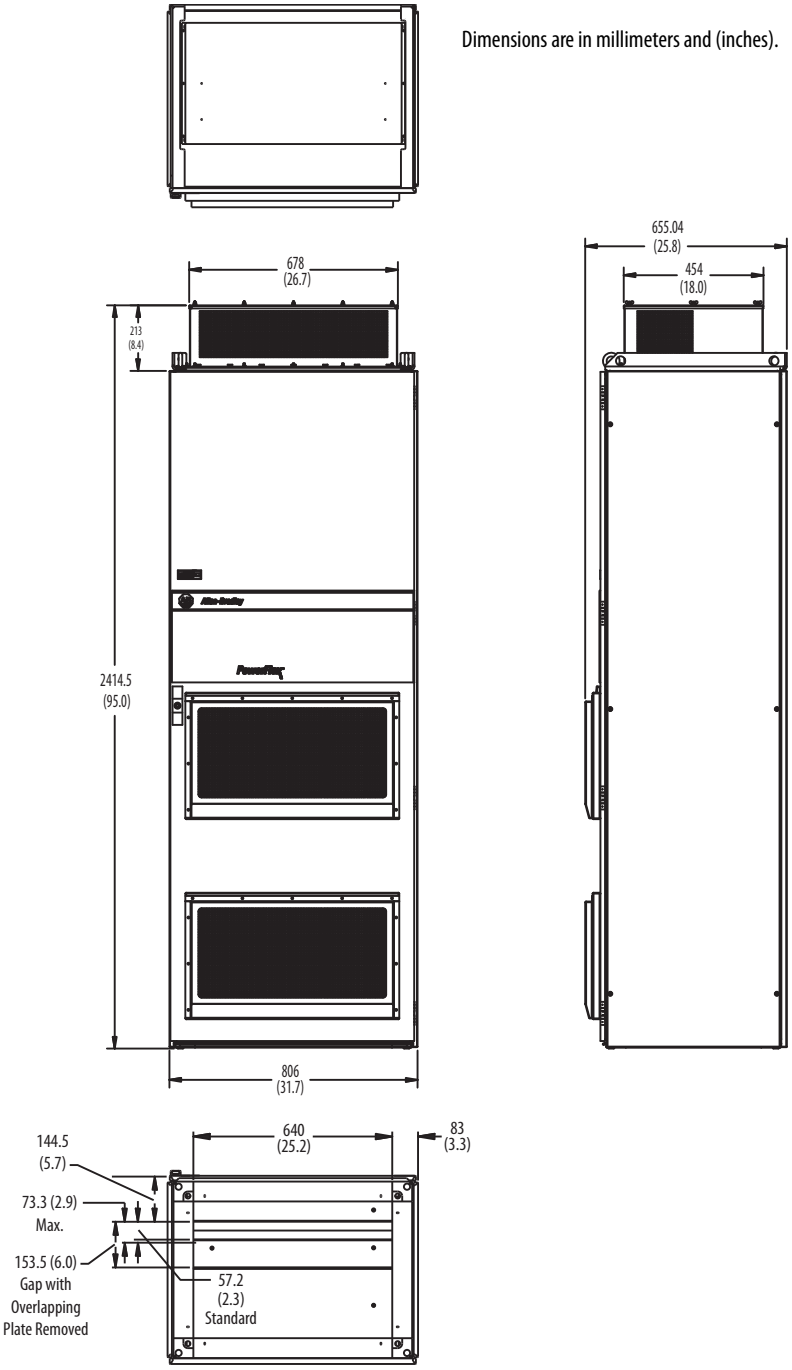

Frame 11 Drive Weights

Voltage Class	Drive Rating Amps	Approx. Weight kg (lbs.) Drive and Enclosure (AC Input)	Approx. Weight kg (lbs.) Drive and Enclosure (DC Input)
400/480V AC (540/650V DC)	590	614 (1354)	446 (983)
	650	614 (1354)	446 (983)
	730	614 (1354)	446 (983)
600/690V AC (810/932V DC)	460	561 (1237)	446 (983)
	502	561 (1237)	446 (983)
	590	676 (1490)	446 (983)

Frame 12, NEMA/UL Type 1, IP21 (Enclosure Code "A")

Dimensions are in millimeters and (inches).

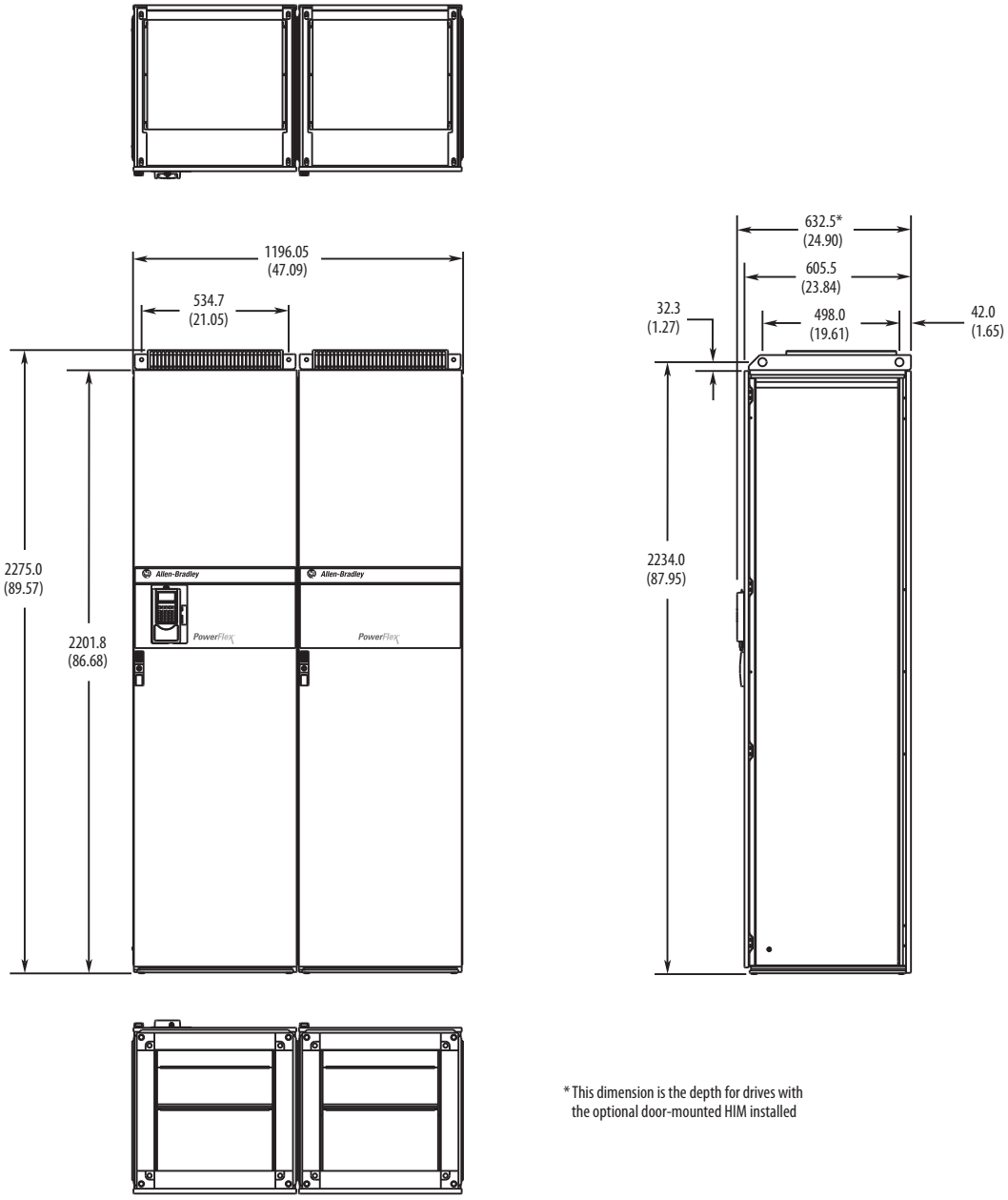

* This dimension is the depth for drives with the optional door-mounted HIM installed

Frame 12, NEMA/UL Type 1, IP20 (Enclosure Code "B")

Dimensions are in millimeters and (inches).

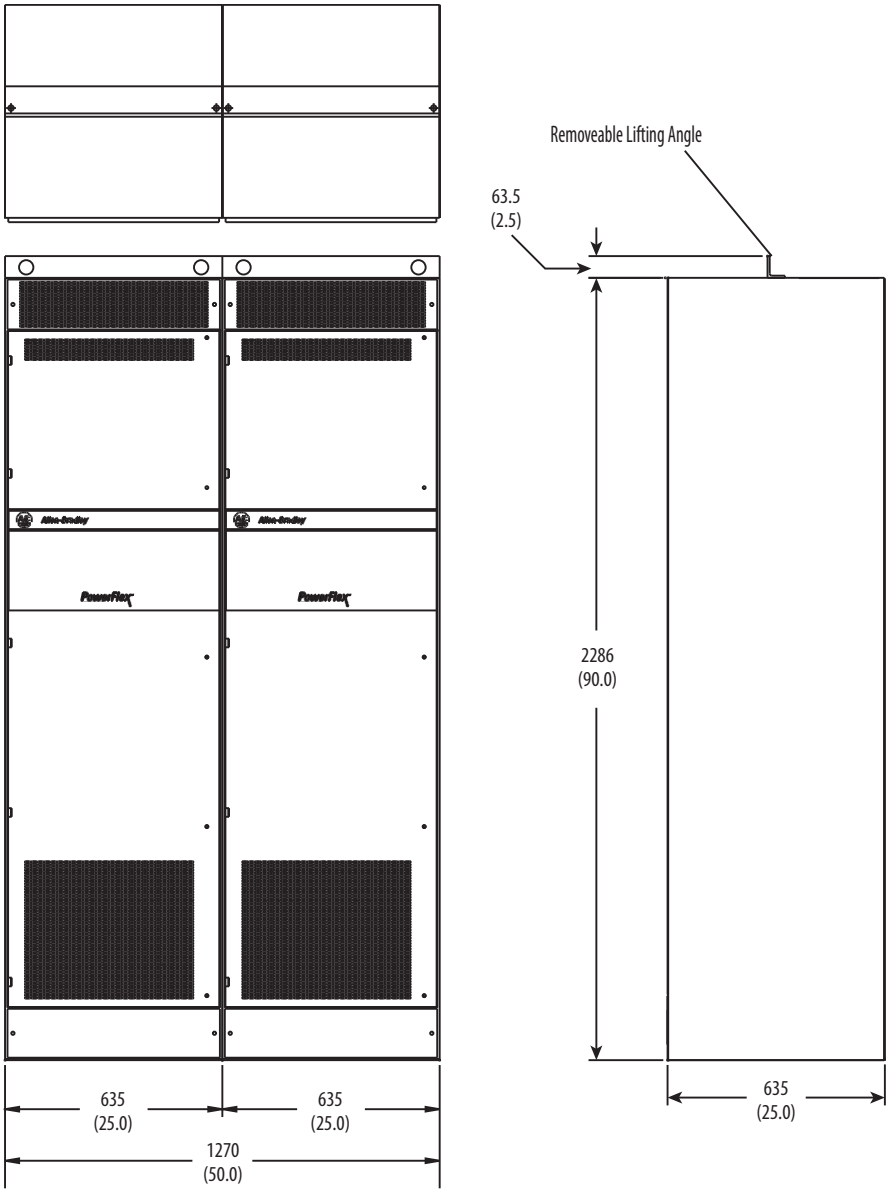

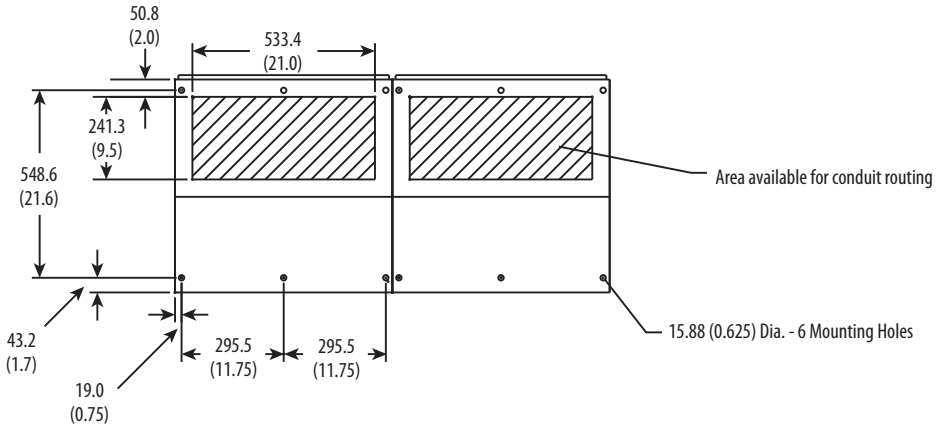

Frame 12, NEMA/UL Type 12, IP54 (Enclosure Code "H")

Dimensions are in millimeters and (inches).

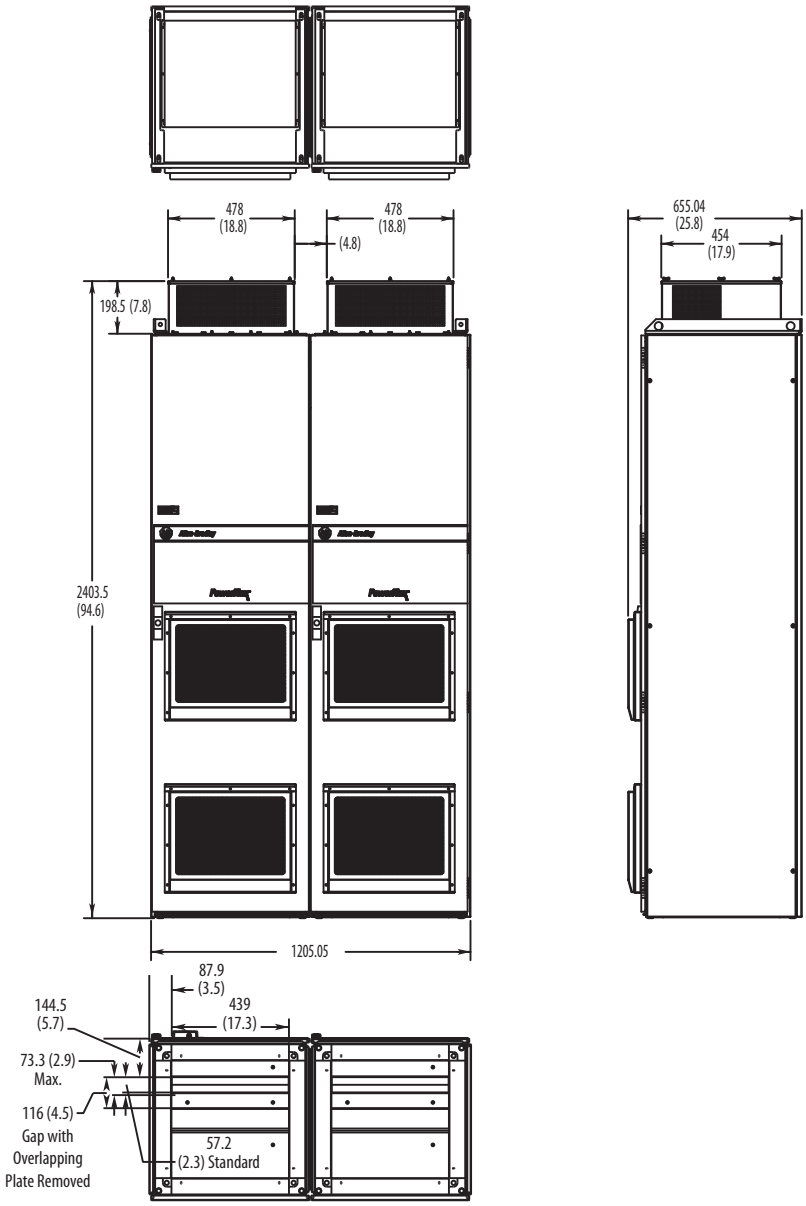

Frame 12 Drive Weights

Voltage Class	Drive Rating Amps	Approx. Weight kg (lbs.) Drive and Enclosure (AC Input)	Approx. Weight kg (lbs.) Drive and Enclosure (DC Input)
400/480V AC (540/650V DC)	820	864 (1906)	634 (1398)
	920	864 (1906)	634 (1398)
	1030	864 (1906)	634 (1398)
600/690V AC (810/932V DC)	650	802 (1768)	634 (1398)
	750	802 (1768)	634 (1398)
	820	802 (1768)	634 (1398)

Frame 13 NEMA/UL Type 1, IP21 (Enclosure Code "A")

Voltage Class	Amps	A	B	C	D	E	F
400/480V AC (540/650V DC)	1150	1412 (56)	1329 (52)	1264 (50)	535 (21)	735 (29)	1264 (58)
	1300	1600 (63)	1529 (60)	1464 (58)	735 (29)	735 (29)	1464 (58)
	1450						
600/690V AC (810/932V DC)	920	1412 (56)	1329 (52)	1264 (50)	535 (21)	735 (29)	1264 (50)
	1030						
	1180						

Dimensions are in millimeters and (inches).

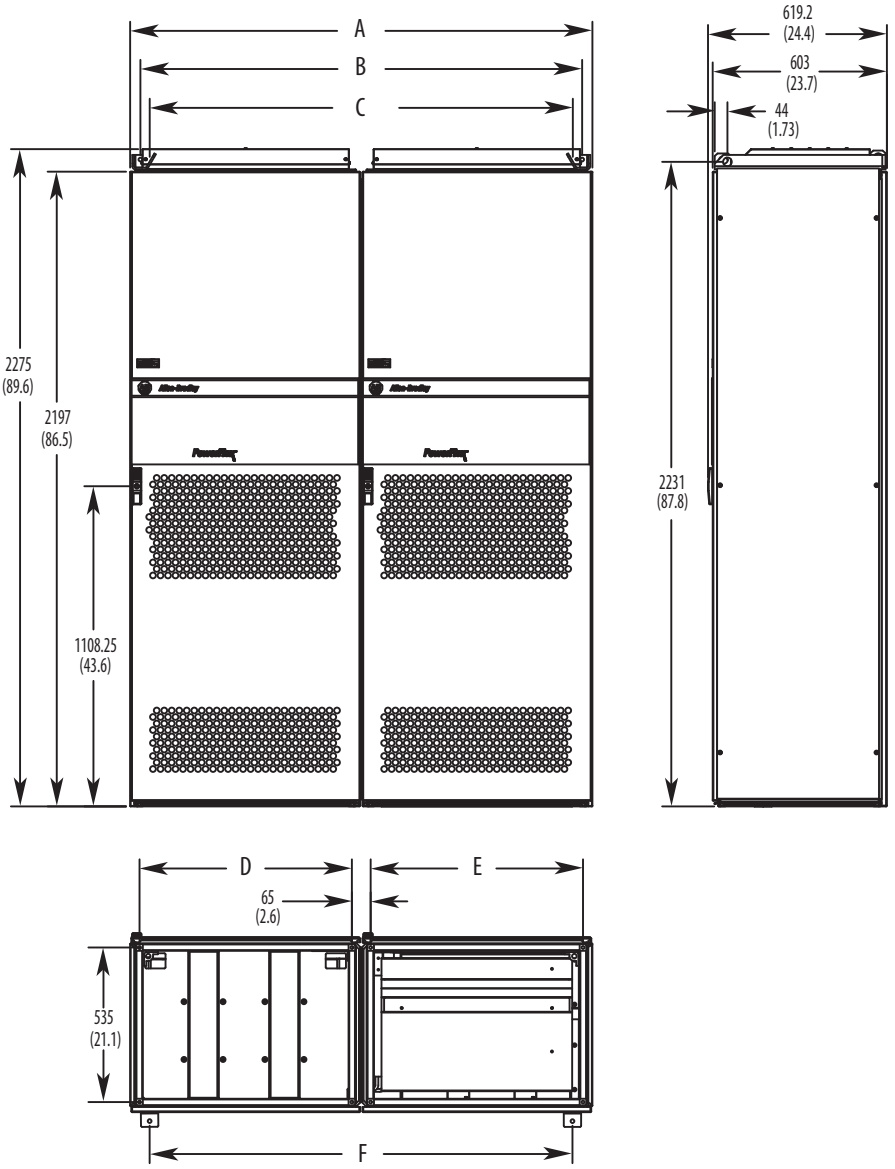

Frame 13 NEMA/UL Type 12, IP54 (Enclosure Code "H")

Voltage Class	Amps	A	B	C	D	E	F	G	H
400/480V AC (540/650V DC)	1150	1412 (56)	478 (18.8)	678 (26.7)	1 @ 242 (9.5) 1 @ 213 (8.4)	2443.5 (104.5) Max	535 (21)	735 (29)	1264 (50)
	1300	1600 (63)	678 (26.7)	678 (26.7)	2 @ 242 (9.5)	2443.5 (104.5)	735 (29)	735 (29)	1464 (58)
	1450								
600/690V AC (810/932V DC)	920	1412 (56)	478 (18.8)	678 (26.7)	1 @ 242 (9.5) 1 @ 213 (8.4)	2443.5 (104.5) Max	535 (21)	735 (29)	1264 (50)
	1030								
	1180								

Dimensions are in millimeters and (inches).

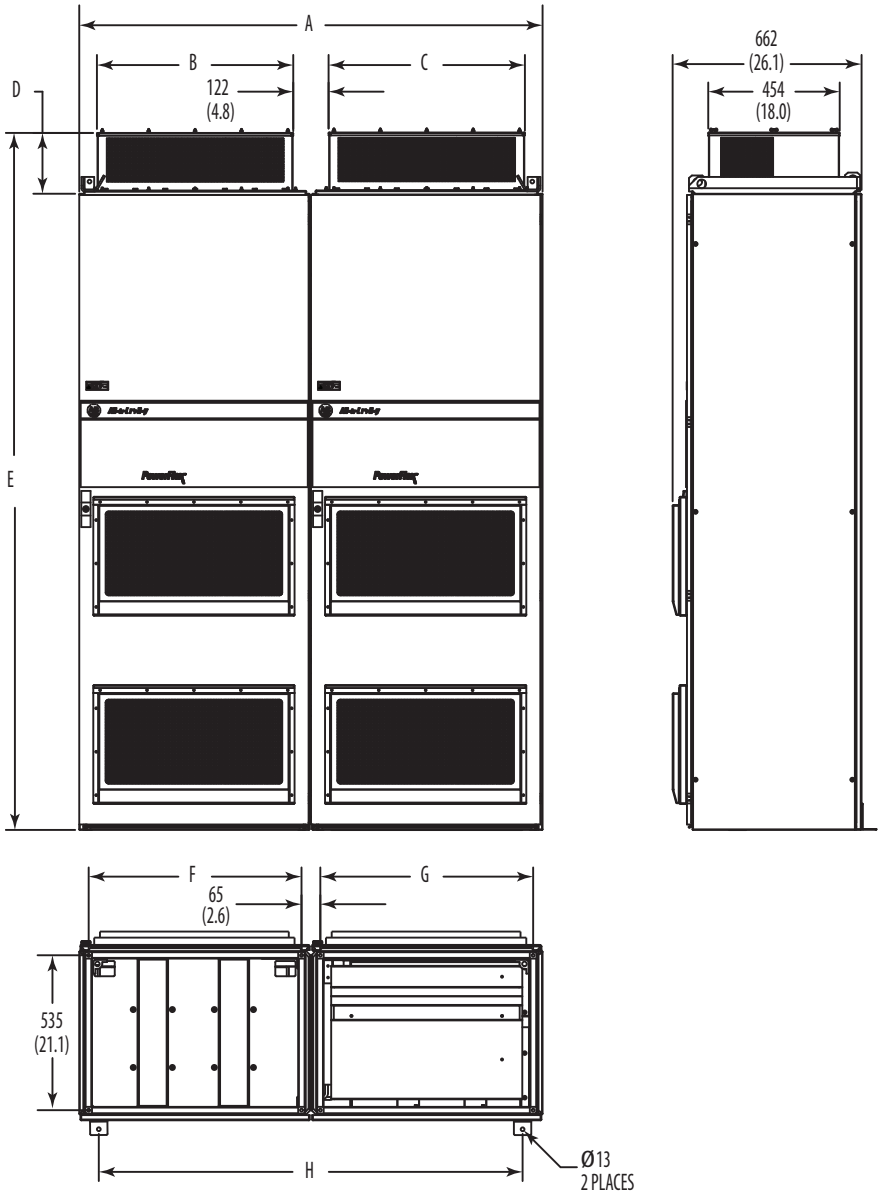

Frame 13 Drive Weights

Voltage Class	Drive Rating Amps	Approx. Weight kg (lbs.) Drive and Enclosure (AC Input)	Approx. Weight kg (lbs.) Drive and Enclosure (DC Input)
400/480V AC (540/650V DC)	1150	1248 (2751)	600 (1323)
	1300	1400 (3086)	600 (1323)
	1450	1400 (3086)	600 (1323)
600/690V AC (810/932V DC)	920	1248 (2751)	600 (1323)
	1030	1248 (2751)	600 (1323)
	1180	1248 (2751)	600 (1323)

Frame 14, 1500 A Drives NEMA/UL Type 1, IP 21 (Enclosure Code "A")

Dimensions are in millimeters and (inches).

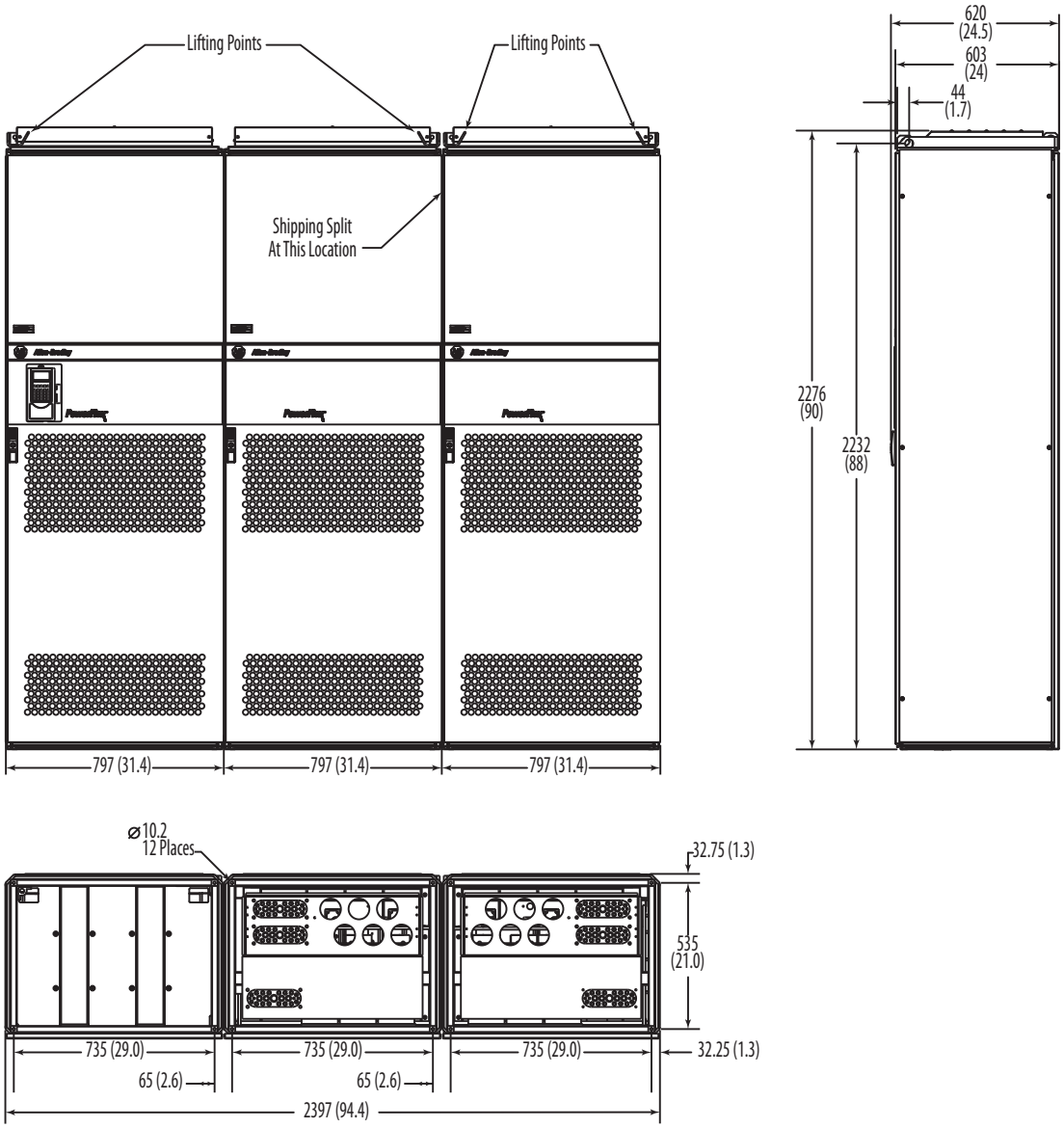

Frame 14, Drives above 1500 A NEMA/UL Type 1, IP 21 (Enclosure Code "A")

Dimensions are in millimeters and (inches).

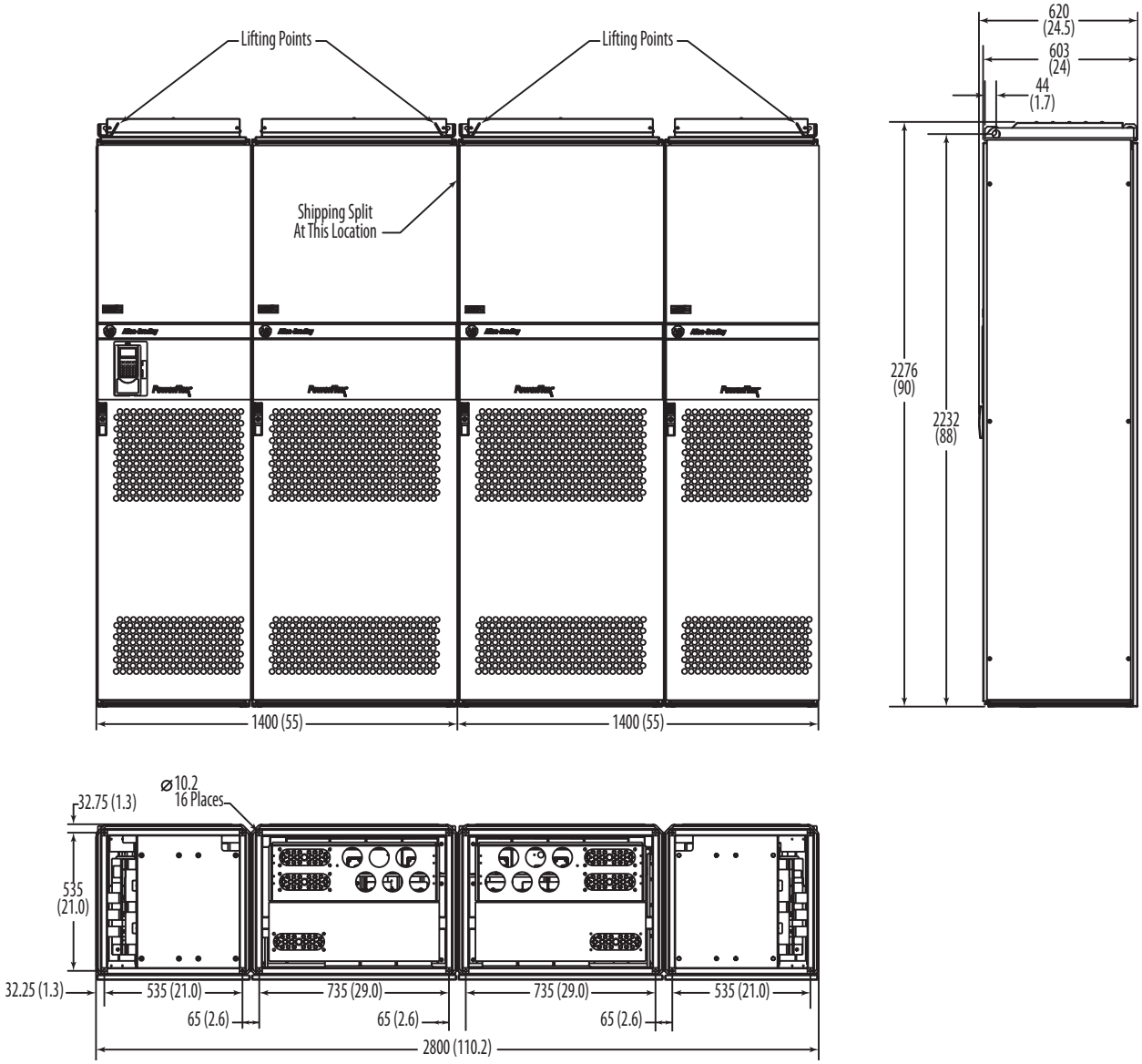

Frame 14 AC Input Drive - Standard Rittal Enclosure (NEMA/UL Type 1, IP21) Weights

Voltage Class	Drive Rating Amps	Section 1 Drive and Enclosure Weight kg (lbs.)	Section 1 Drive, Enclosure and Packaging Weight kg (lbs.)	Section 2 Drive and Enclosure Weight kg (lbs.)	Section 2 Drive, Enclosure and Packaging Weight kg (lbs.)	Total Drive and Enclosure Weight (All Sections) kg (lbs.)
600/690V AC (810/932V DC)	1500	1270 (2800)	1390 (3064)	650 (1433)	770 (1697)	1920 (4233)

Frame 14 1500 A Drives NEMA/UL Type 12, IP54 (Enclosure Code "H")

Dimensions are in millimeters and (inches).

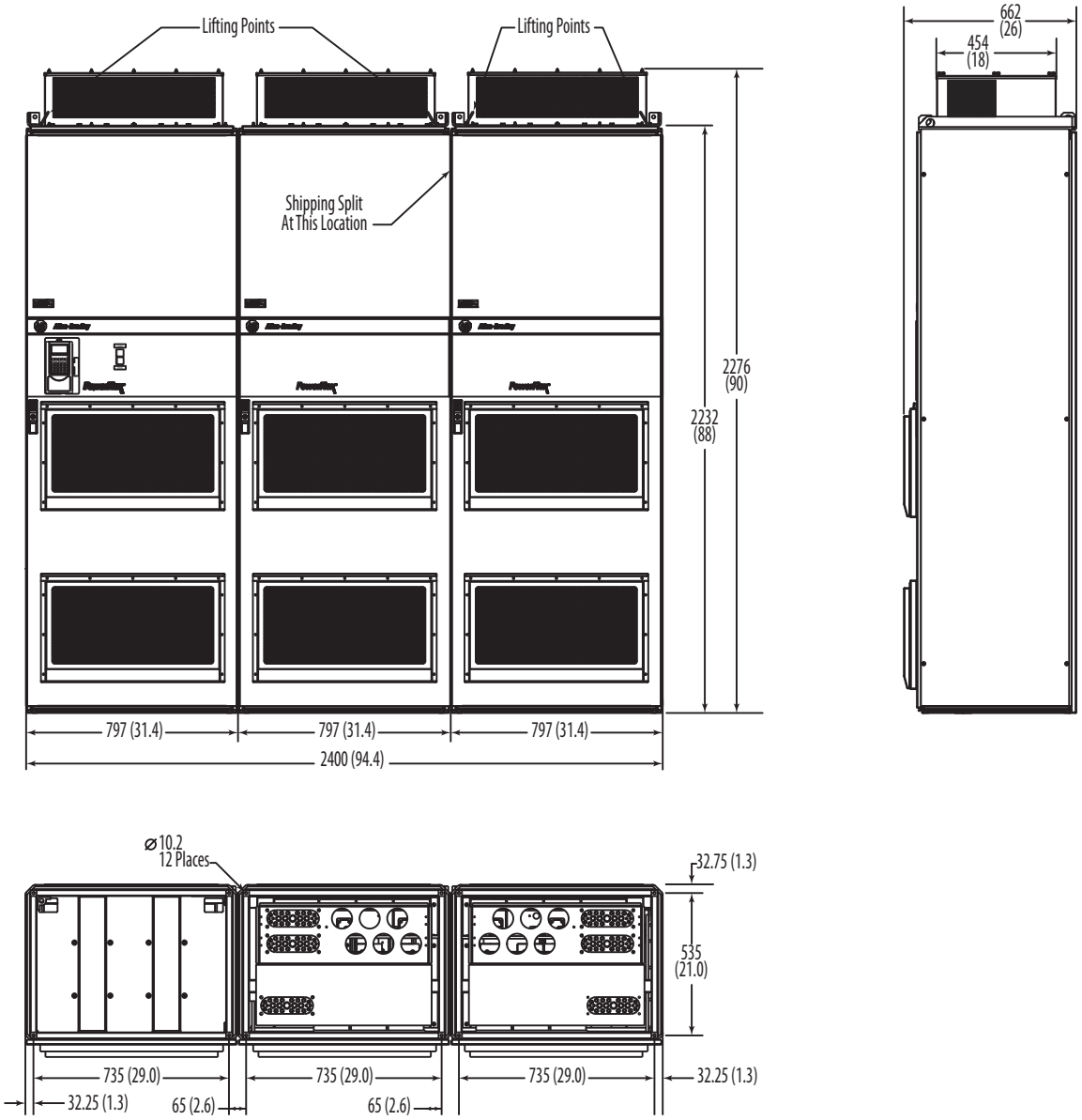

Frame 14 Drives above 1500 A NEMA/UL Type 12, IP54 (Enclosure Code "H")

Dimensions are in millimeters and (inches).

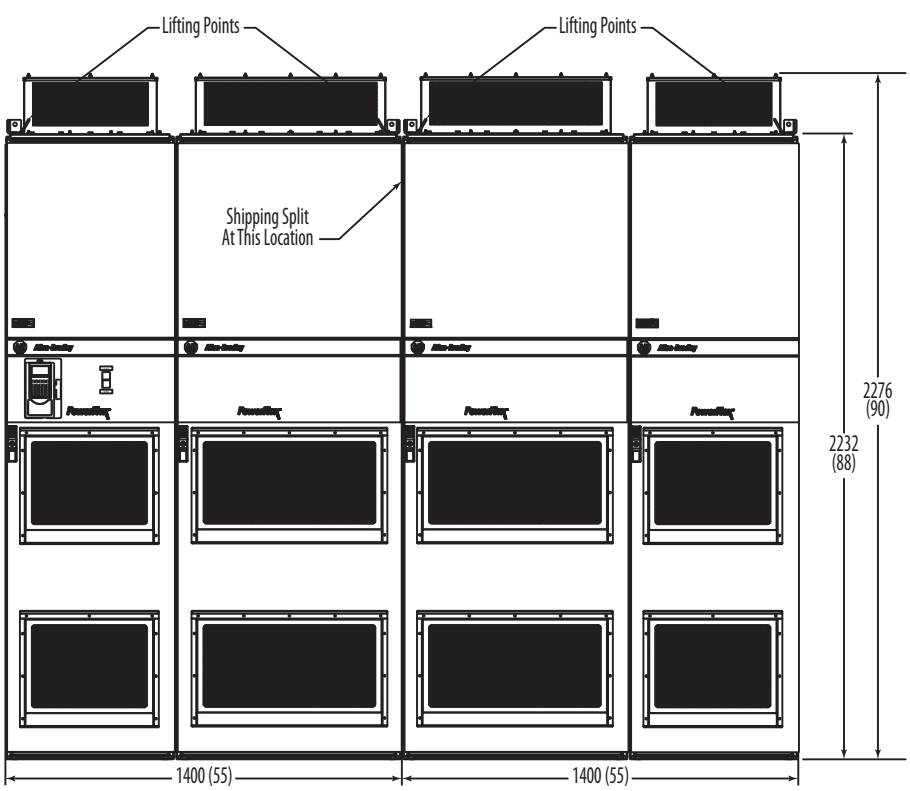

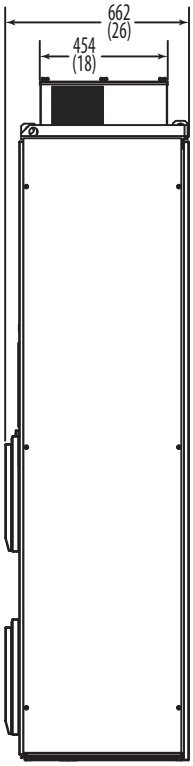

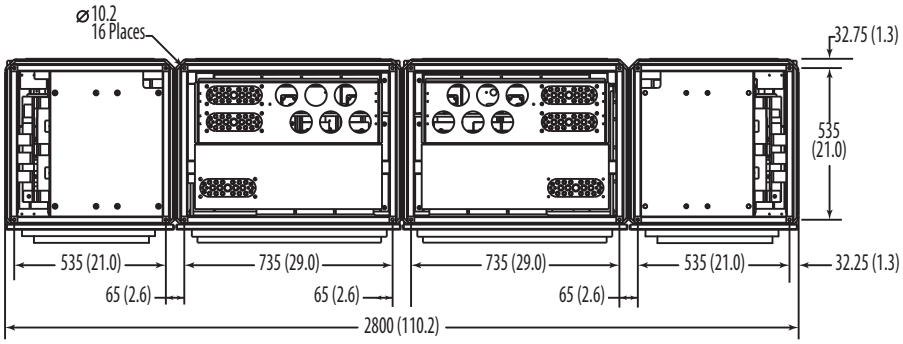

Frame 14, DC Input NEMA/UL Type 1, IP 21 (Enclosure Code "A")

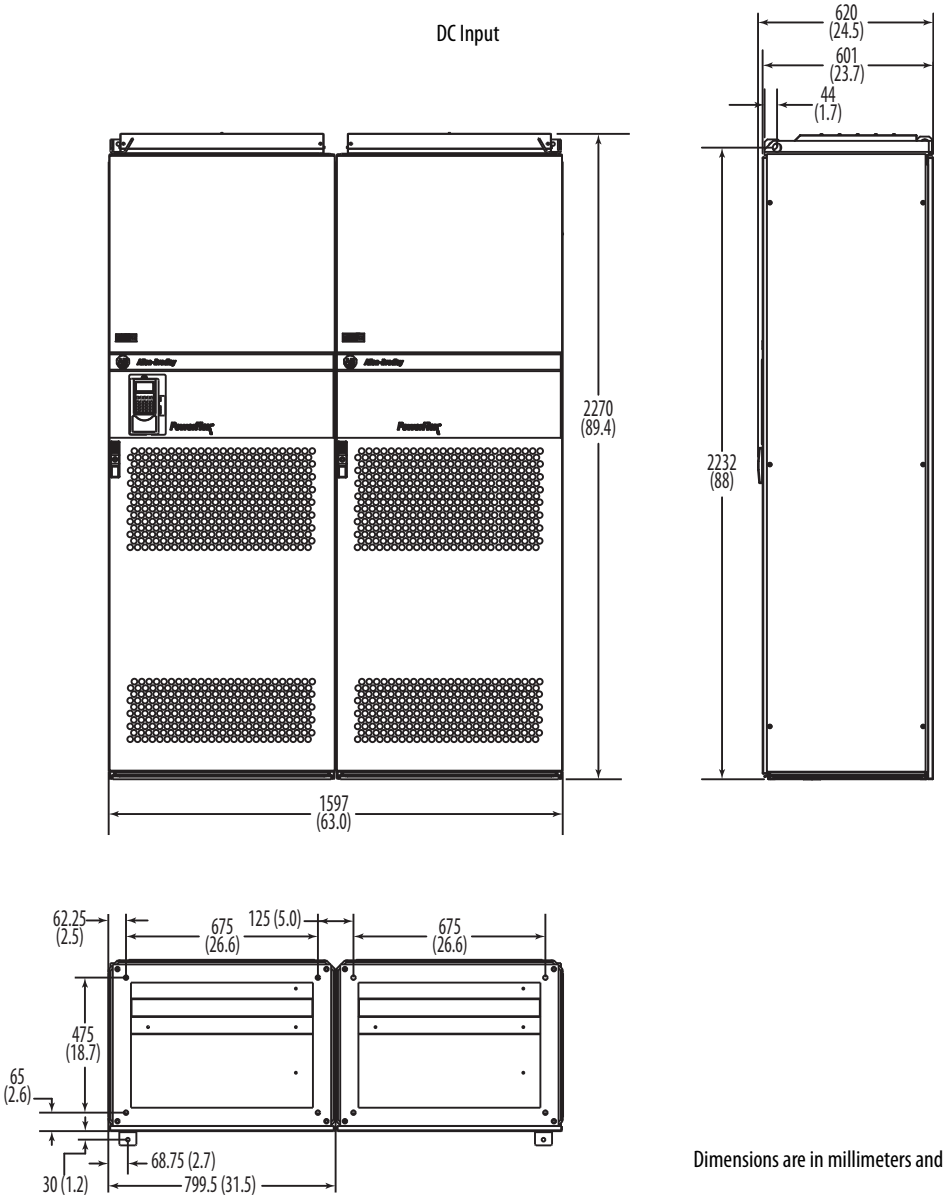

Dimensions are in millimeters and (inches).

Frame 14 DC Input Drive - Standard Rittal Enclosure (NEMA/UL Type 1 - IP21) Weights

Voltage Class	Drive Rating Amps	Drive and Enclosure Weight kg (lbs.)	Drive, Enclosure and Packaging Weight kg (lbs.)
600/690V AC (810/932V DC)	1500	1220 (2690)	1340 (2954)

Specifications

Category	Specification	Frames 1…6 (690V Drive Frames 5 & 6 Only)						Frames 9 & Up				
Protection		**200…208V**	**240V**	**380/400V**	**480V**	**600V (Frames 1…4)**	**600V/690V (Frames 5&6)**	**380/400V**	**480V**	**500V**	**600V**	**690V**
	AC Input Overvoltage Trip (Six Pulse, Three-Phase):	300VAC	300VAC	600VAC	600VAC	863VAC	863VAC	675V AC	675V AC	675V AC	889V AC	889VAC
	Bus Overvoltage Trip:	405V DC	405V DC	810V DC	810V DC	1164V DC	1164V DC	911V DC	911V DC	911V DC	1200V DC	1200V DC
	Bus Undervoltage Trip:	Adjustable						Adjustable				
	Nominal Bus Voltage:	281V DC	324V DC	540V DC	648V DC	810V DC	931V DC	540V DC	648V DC	645V DC	810V DC	931V DC
	Heat Sink Thermistor:	Monitored by microprocessor overtemp trip						Monitored by microprocessor overtemp trip				
	Drive Overcurrent Trip Software Current Limit: Hardware Current Limit: Instantaneous Current Limit:	 Calculated value, 105% of motor rated to 200% of drive rated 105% of 3 sec. rating (158%…210%) 143% of 3 sec rating (215%…287%)						 Calculated value, 105% of motor rated to 200% of drive rated 360% of rated Heavy Duty current (typical) —				
	Line Transients:	Up to 6000 volts peak per IEEE C62.41-1991						Up to 6000 volts peak per IEEE C62.41-1991				
	Control Logic Noise Immunity:	Showering arc transients up to 1500V peak						Showering arc transients up to 1500V peak				
	Power Ride-Thru:	15 milliseconds at full load						15 milliseconds at full load				
	Logic Control Ride-Thru	0.25 seconds, drive not running						0.25 seconds, drive not running				
	Ground Fault Trip:	Phase-to-ground on drive output						Phase-to-ground on drive output				
	Short Circuit Trip:	Phase-to-phase on drive output						Phase-to-phase on drive output				
Certifications	ATEX	EC-Type-Examination Certificate TÜV 05 ATEX 7202 for directive 2014/34/EU. See Appendix E in the PowerFlex 700S Drives with Phase II Control Programming Manual, publication 20D-PM001, for more information.						EC-Type-Examination Certificate TÜV 05 ATEX 7202 for directive 2014/34/EU. See Appendix E in the PowerFlex 700S Drives with Phase II Control Programming Manual, publication 20D-PM001, for more information.				
	RCM	(Does not include 600V AC Input frames 1…4 drives) Australian Communications and Media Authority In conformity with the following: Radiocommunications Act:1992 (including Amendments up to 2018) Radiocommunications (Electromagnetic Compatibility) Standard 2017 Radiocommunications Labeling (Electromagnetic Compatibility) Notice 2017 Standards applied: EN 61800-3						Australian Communications and Media Authority In conformity with the following: Radiocommunications Act:1992 (including Amendments up to 2018) Radiocommunications (Electromagnetic Compatibility) Standard 2017 Radiocommunications Labeling (Electromagnetic Compatibility) Notice 2017 Standards applied: EN 61800-3				
	c-UL-us	Listed to UL508C and C22.2 No. 14						Listed to UL508C and C22.2 No. 14				
	CE (1)	In conformity with the following European Directives: EMC Directive (2014/30/EU) Low Voltage Directive (2014/35/EU) Standards Applied: EN 61800-3 EN 50178						In conformity with the following European Directives: EMC Directive (2014/30/EU) Low Voltage Directive (2014/35/EU) Standards Applied: EN 61800-3 EN 50178				
	Efficiency Class	Ecodesign regulation (EU) 2019/1781, IE2 efficiency class, see PowerFlex AC Drive Performance Specifications per Ecodesign Regulation (EU) 2019/1781, publication PFLEX-TD003 for additional information.						—				
	KCC	R-R-RAA-Drive See the certificate of registration for specific drive catalog numbers that have this certification.										
	TÜV	TÜV Rheinland - Certification applies to 20D-P2-DG01 Safety Option Module when installed in a frame 1…6, 208/240V and 400/480V, and frame 5 and 6, 600/690V drives. Standards applied: EN 61800-5-2 EN 60204-1 EN ISO 13849-1 EN 62061 IEC 61508 Part 1-7 EN 61800-3 IEC 61800-5-1						TÜV Rheinland - Certification applies to 20D-P2-DG01 Safety Option Module when installed in a frame 9…14, 400/480V and 600/690V drives. Standards applied: EN 61800-5-2 EN 60204-1 EN ISO 13849-1 EN 62061 EN 61800-3 IEC 61800-5-1 IEC 61508 Part 1-7				
Designed to Meet Applicable Requirements		IEC 61800-2 Adjustable speed electrical power drive systems - Part 2: General requirements IEC 61800-5-1 Adjustable speed electrical power drive systems - Safety requirements NFPA 70 – US National Electric Code NEMA 250 – Enclosures for Electrical Equipment						IEC 61800-2 Adjustable speed electrical power drive systems - Part 2: General requirements IEC 61800-5-1 Adjustable speed electrical power drive systems - Safety requirements NFPA 70 – US National Electric Code NEMA 250 – Enclosures for Electrical Equipment				

(1) The PowerFlex 700S drive is not CE Certified when the resolver feedback module is installed in the drive.

Category	Specification	Frames 1…6 (690V Drive - Frames 5 & 6 Only)	Frames 9 & Up
Environment	Altitude:	1,000 m (3,300 ft.) Max without derating	(See Altitude Derating on page 107)
	Surrounding Air Temperature without Derating: Open Type: IP20: NEMA/UL Type 1: IP56, NEMA/UL Type 4X:	 0° to 50° C (32° to 122° F) 0° to 50° C (32° to 122° F) 0° to 40° C (32° to 104° F) 0° to 40° C (32° to 104° F)	Based on the drive rating. See tables in Drive Power Ratings on page 50. **Note**: Frames 9 & 10 are rated 0° to 40° C (32° to 104° F) air temperature surrounding the drive module.
	Storage Temperature (all const.):	–40° to 70° C (-40° to 158° F)	–40° to 70° C (–40° to 158° F)
	Relative Humidity:	5% to 95% non-condensing	5% to 95% non-condensing
	Shock:	10G peak for 11 ms duration (±1.0 ms)	15G peak for 11 ms duration (±1.0 ms)
	Vibration:	0.152 mm (0.006 in.) displacement, 1G peak, 5.5 Hz	2 mm (0.0787 in.) displacement, 1G peak EN50178 / EN60068-2-6
	Sound:	Frame / Fan Speed / Sound Level 1 / 30 CFM / 59 dB 2 / 50 CFM / 57 dB 3 / 120 CFM / 61 dB 4 / 190 CFM / 59 dB 5 / 200 CFM / 71 dB 6 / 300 CFM / 72 dB Note: Sound pressure level is measured at 2 meters.	Frame / Sound Level / Back-ground Noise Level 9 / 78 / 49 10 / 77 / 49 13 / 76 / 46 Note: Sound pressure level is measured at 1 meter. All devices that are measured are 400V IP21 and in power-up mode.
	Atmosphere:	**Important:** Drive **must not** be installed in an area where the ambient atmosphere contains volatile or corrosive gas, vapors, or dust. If the drive is not going to be installed for a period of time, it must be stored in an area where it will not be exposed to a corrosive atmosphere.	
Electrical	AC Input (Six-Pulse, Three-Phase) Voltage Tolerance:	(See Voltage Tolerance on page 107 for Full Power and Operating Range)	(See Voltage Tolerance on page 107 for Full Power and Operating Range)
	Frequency Tolerance:	47…63 Hz	47…63 Hz.
	Input Phases:	Six-pulse, three-phase input provides full rating for all drives. Single-phase operation provides 50% of rated current.	Six-pulse, three-phase input provides full rating for all drives. Single-phase operation provides 20% of rated current.
	DC Input Voltage Tolerance:	±10% of Nominal Bus Voltage (above)	±10% of Nominal Bus Voltage (above)
	Displacement Power Factor:	0.98 across speed range	0.98 across speed range
	Efficiency:	97.5% at rated amps, nominal line volts	97.5% at rated amps, nominal line volts
	Max Short Circuit Current Rating: Using Recommended Fuse or Circuit Breaker Type:	Maximum short circuit current rating to match specified fuse/circuit breaker capability. ≤ 200,000 Amps	≤ 200,000 Amps
	Maximum Drive to Motor Power Ratio:	The drive to motor rating cannot exceed a 2:1 ratio	The drive to motor rating cannot exceed a 2:1 ratio

Category	Specification	Frames 1…6 (690V Drive Frames 5 & 6 Only)	Frames 9 & Up
Control	Method Induction Motor: Brushless Motor:	Sine coded PWM with programmable carrier frequency, Indirect Self-Organized, Field-Oriented Control, Current-regulated. Ratings apply to all drives. See the *PowerFlex 700S Phase II Control Reference Manual*, publication PFLEX-RM003…, for derating guidelines. The drive can be supplied as six-pulse in a configured package.	
	Carrier Frequency	Drive rating: 4 kHz Settings: 2, 4, 6, 8, 10 kHz (6 kHz is for V/Hz operation only)	Drive rating: 2 kHz Settings: 2, 4, 6, 8, 10 kHz (6 kHz is for V/Hz operation only)
	Output Voltage Range:	0 to rated motor voltage	0 to rated motor voltage
	Output Frequency Range:	0…400 Hz	0…400 Hz **Note**: For output frequencies above 320…400 Hz consult the factory.
	Speed Control	Speed regulation - without feedback 0.1% of base speed across 120:1 speed range 120:1 operating range 50 rad/sec bandwidth	Speed regulation - without feedback 0.1% of base speed across 120:1 speed range 120:1 operating range 50 rad/sec bandwidth
		Speed regulation - with feedback 0.001% of base speed across 120:1 speed range 1000:1 operating range 744 rad/sec bandwidth	Speed regulation - with feedback 0.001% of base speed across 120:1 speed range 1000:1 operating range 300 rad/sec bandwidth
	Torque Regulation	Torque Regulation - without feedback ±5%, 600 rad/sec bandwidth	Torque Regulation - without feedback ±10%, 600 rad/sec bandwidth
		Torque Regulation - with feedback ±2%, 2500 rad/sec bandwidth	Torque Regulation - with feedback ±5%, 2500 rad/sec bandwidth
	Selectable Motor Control:	Field Oriented Control with and without a feedback device and permanent magnet motor control	
	Stop Modes:	Multiple programmable stop modes including – Ramp, Coast, and Current Limit	
	Accel/Decel	Independently programmable accel and decel times adjustable from 0 to 6553.5 in 0.1 second increments	
	S-Curve Time	Adjustable 0.5...4.0 seconds	
	Intermittent Overload:	110% Overload capability for up to 1 minute 150% Overload capability for up to 3 seconds	
	Current Limit Capability:	Independent Motoring and Regenerative Power Limits programmable to 800% of rated output current	
	Electronic Motor Overload Protection	Class 10 motor overload protection according to NEC article 430 and motor over-temperature protection according to NEC article 430.126 (A)(2). UL 508C File E59272.	

Category	Specification	Frames 1…6 (690V Drive Frames 5 & 6 Only)	Frames 9 & Up
Feedback	Encoder Inputs (2):	Dual Channel Plus Marker, Isolated with differential transmitter, Output (Line Drive) Incremental, Dual Channel Quadrature type	
	Encoder PPR Rating:	Encoder PPR ratings are limited to the values specified in the table below:	
	Encoder Voltage Supply:	5V DC or 12V DC 320 mA/channel 5V DC minimum high state voltage of 3.0V DC, maximum low voltage state of 0.4V DC. 12V DC minimum high state voltage of 7.0V DC, maximum low state voltage of 0.4V DC	5V DC or 12V DC 320 mA/channel 5V DC minimum high state voltage of 3.0V DC, maximum low voltage state of 0.4V DC. 12V DC minimum high state voltage of 7V DC, maximum low state voltage of 0.4V DC
	Maximum Input Frequency:	400 kHz	500 kHz
	Stegmann Option:		
	Encoder Voltage Supply:	11.5V DC @ 130 mA	11.5V DC @ 130 mA
	Hi-Resolution Feedback:	Sine/Cosine 1V P-P Offset 2.5	Sine/Cosine 1V P-P Offset 2.5
	Maximum Cable Length:	90 m (295 ft)	90 m (295 ft)
	Maximum Frequency (Encoder Speed)	12.5 µs/cycle (4687.5 RPM for encoders with 1024 sine cycles per revolution) (9375 RPM for encoders with 512 sine cycles per revolution)	12.5 µs/cycle (4687.5 RPM for encoders with 1024 sine cycles per revolution) (9375 RPM for encoders with 512 sine cycles per revolution)
	RS-485 Interface:	Hi-Resolution Feedback Option card obtains the following information via the Hiperface RS-485 interface shortly after power-up: Address, Command Number, Mode, Number of turns, Number of Sine/Cos cycles, Checksum	Hi-Resolution Feedback Option card obtains the following information via the Hiperface RS-485 interface shortly after power-up: Address, Command Number, Mode, Number of turns, Number of Sine/Cos cycles, Checksum
	Resolver Option:(1)		
	Excitation Frequency:	2381…9300 Hz	2381…9300 Hz
	Excitation Voltage:	8…26 Vrms	8…26 Vrms
	Operating Frequency Range:	1…10 kHz	1…10 kHz
	Resolver Feedback Voltage:	2V ± 300 mV	2V ± 300 mV
	Maximum Cable Length:	304.8 m (1000 ft)	304.8 m (1000 ft)
DriveLogix	User Available MemoryBase:	1.5 MB (CompactFlash for non-volatile storage also available)	1.5 MB (CompactFlash for non-volatile storage also available)
	Battery:	1769-BA 0.59 g lithium	1769-BA 0.59 g lithium
	Serial Cable:	1761-CBLPM02 to 1761-NET-AIC 1761-CBLPA00 to 1761-NET-AIC 1756-CP3 directly to controller 1747-CP3 directly to controller category 3 (2)	1761-CBLPM02 to 1761-NET-AIC 1761-CBLPA00 to 1761-NET-AIC 1756-CP3 directly to controller 1747-CP3 directly to controller category 3 (2)
	Compact I/O Connection:	Up to (16) modules (8 modules per bank or 4 max on either side of the power supply)	Up to (16) modules (8 modules per bank or 4 max on either side of the power supply)
	Cable:	20D-DL2-CL3 20D-DL2-CR3	20D-DL2-CL3 20D-DL2-CR3

n =	2^n =	x	mod 75	mod 125	mod 225	mod 375	mod 625	mod1125
0	1		**75**	**125**	**225**	**375**	**625**	**1125**
1	2		**150**	**250**	**450**	**750**	**1250**	**2250**
2	4		**300**	**500**	**900**	**1500**	**2500**	**4500**
3	8		**600**	**1000**	**1800**	**3000**	**5000**	**9000**
4	**16**		**1200**	**2000**	**3600**	**6000**	**10000**	**18000**
5	**32**		**2400**	**4000**	**7200**	**12000**	**20000**	--
6	**64**		--	--	--	--	--	--
7	**128**		--	--	--	--	--	--
8	**256**		--	--	--	--	--	--
9	**512**		--	--	--	--	--	--
10	**1024**		--	--	--	--	--	--
11	**2048**		--	--	--	--	--	--
12	**4096**		--	--	--	--	--	--

(1) The PowerFlex 700S drive is not CE Certified when the resolver feedback module is installed in the drive.

Voltage Tolerance

Drive Rating	Nominal Line Voltage	Nominal Motor Voltage	Drive Full Power Range	Drive Operating Range
200…240	200	200†	200…264	180…264
	208	208	208…264	
	240	230	230…264	
380…400	380	361†	361…528	325…528
	400	383	383…528	
	480	460	460…528	
500…600 *(Frames 1…4 Only)*	600	575†	575…660	432…660
500…690 *(Frames 5 & 6 Only)*	600	575†	575…660	475…759
	690	690	690…759	475…759

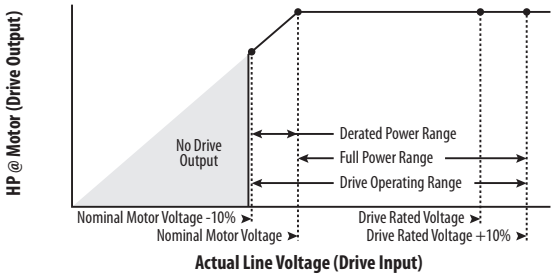

Drive Full Power Range =	Nominal Motor Voltage to Drive Rated Voltage + 10%. Rated current is available across the entire Drive Full Power Range
Drive Operating Range =	†Lowest Nominal Motor Voltage - 10% to Drive Rated Voltage + 10%. Drive Output is linearly derated when Actual Line Voltage is less than the Nominal Motor Voltage

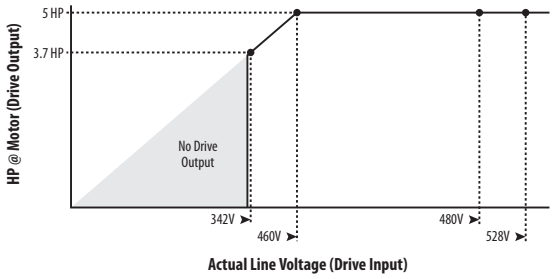

Example:

Calculate the maximum power of a 5 HP, 460V motor connected to a 480V rated drive supplied with 342V actual line voltage input.

- Actual Line Voltage / Nominal Motor Voltage = 74.3%
- 74.3% × 5 HP = 3.7 HP
- 74.3% × 60 Hz = 44.6 Hz

At 342V actual line voltage, the maximum power the 5 HP, 460V motor can produce is 3.7 HP at 44.6 Hz.

Derating Guidelines

Altitude Derating

Frame	Type	Derate
1…6	Altitude	1,000 m (3,300 ft) maximum without derating. For altitudes above 1,000 m (3,300 ft), consult the factory.
	Efficiency (typical)	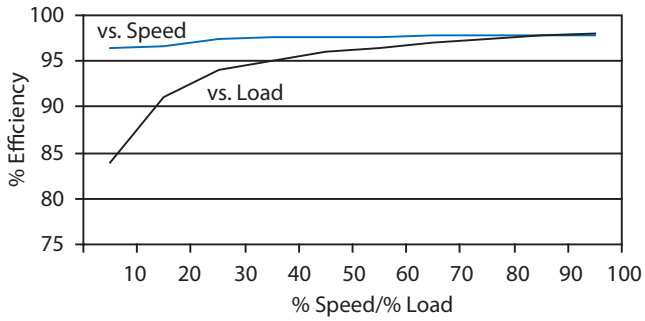
9…14	Altitude	100% load capacity (no derating) up to 1,000 m above sea level. -1% derating for each 100 m above 1,000 m.

Maximum altitudes:	AC Input Voltage:	Max Altitude:
	380…400V	3,000 m
	415…480V	2,000 m
	600…690V	2,000 m

Carrier Derating Curves

Frame	Voltage	ND Rating	Enclosure	Frequency (1)	Derate
1	400V	11 kW	• Open • NEMA/UL Type1 • IP20	6…10kHz	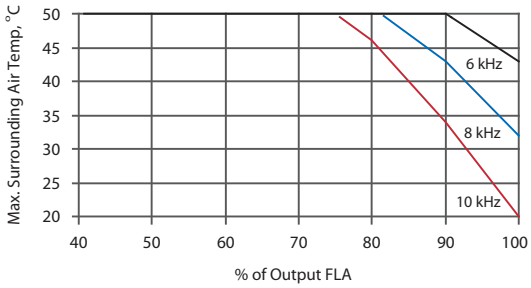
	460V	15 HP	• Open • NEMA/UL Type1 • IP20	6…10kHz	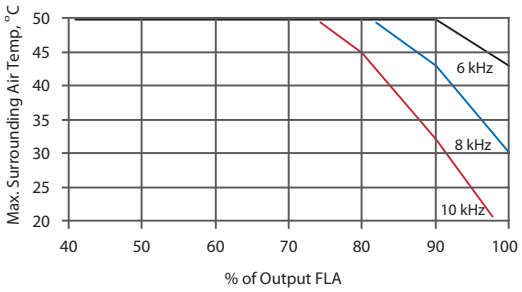
2	400V	15 kW	• Open • NEMA/UL Type1 • IP20	8…10kHz	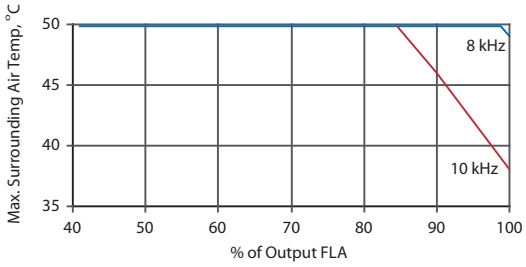
	460V	20 HP	• Open • NEMA/UL Type1 • IP20	10 kHz	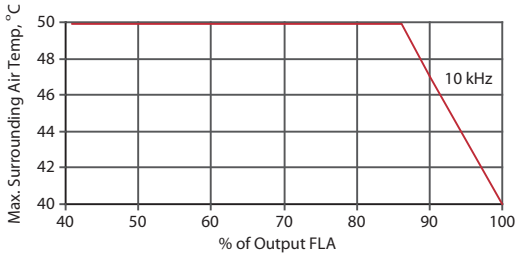
		25 HP	• Open • NEMA/UL Type1 • IP20	6…10 kHz	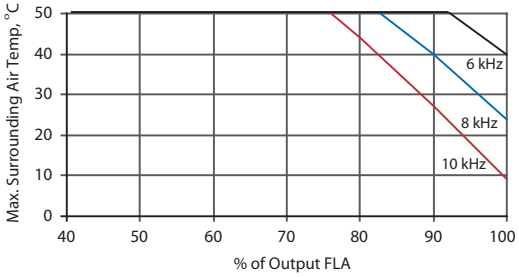

(1) Consult the factory for further derate information at other frequencies.

Frame	Voltage	ND Rating	Enclosure	Frequency (1)	Derate
3	400V	18.5 kW	• Open • NEMA/UL Type1 • IP20	6…10 kHz	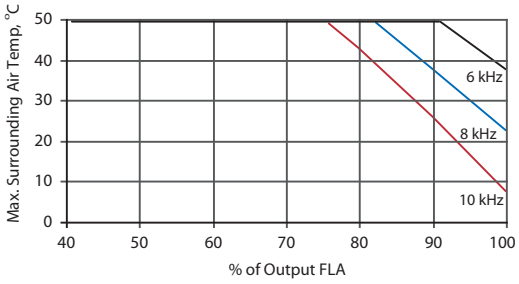
		30 kW	• Open • NEMA/UL Type1 • IP20	6…10 kHz	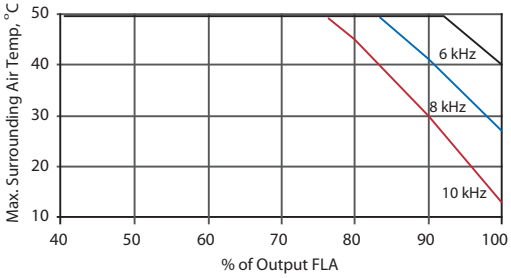
		37 kW	• Open • NEMA/UL Type1 • IP20	4…10 kHz	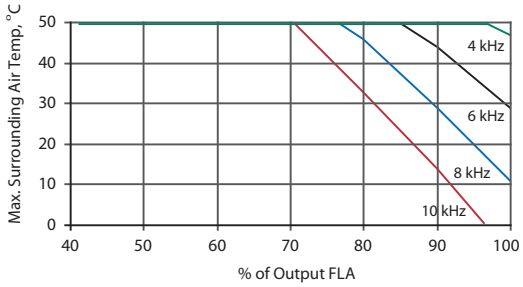
	460V	40 HP	• Open • NEMA/UL Type1 • IP20	6…10 kHz	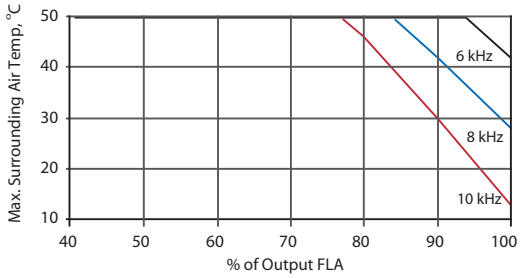
		50 HP	• Open • NEMA/UL Type1 • IP20	6…10 kHz	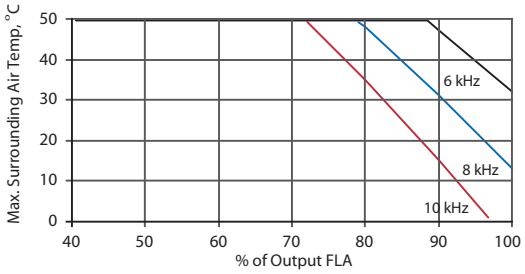

(1) Consult the factory for further derate information at other frequencies.

Frame	Voltage	ND Rating	Enclosure	Frequency (1)	Derate
5	460V	100 HP	• Open • NEMA/UL Type1 • IP20	6…8 kHz	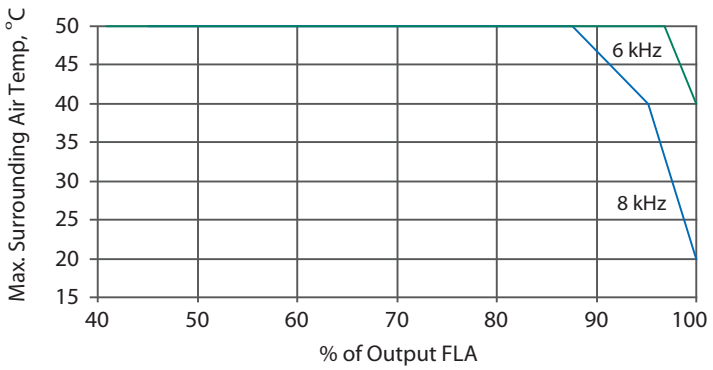

(1) Consult the factory for further derate information at other frequencies.

Frame	Voltage Class	ND/HD Rating (Amps)	Frequency (kHz) (1)	Ambient Temp (°C) (2)			Derate
9	400	300/245	PWM	50	35	20	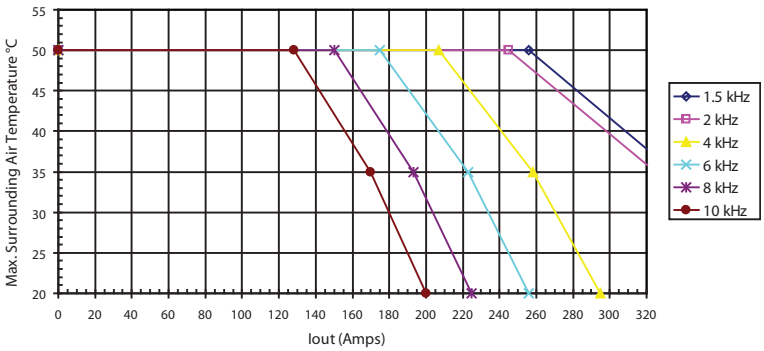
			1.5	256	335	354	
			2.0	245	325	341	
			4.0	207	258	295	
			6.0	175	223	256	
			8.0	150	193	225	
			10.0	128	170	200	
	600	208/170	PWM	50	35	20	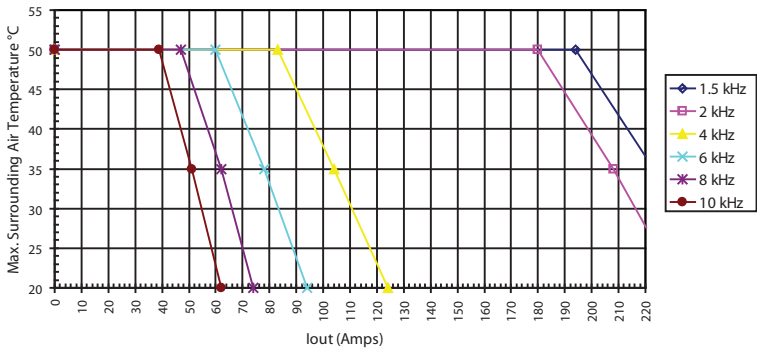
			1.5	194	223	249	
			2.0	180	208	233	
			4.0	83	104	124	
			6.0	60	78	94	
			8.0	47	62	74	
			10.0	39	51	62	

(1) Not all frequencies can be run on all drives.
(2) Ambient Temp / Max Surrounding Air Temperature is the air temperature surrounding the drive module. Rated ambient temperature is 40/40 °C (ND/HD) for 400V class drives and 35/40 °C (ND/HD) for 600V class drives.

Frame	Voltage Class	ND/HD Rating (Amps)	Frequency (kHz) (1)	Ambient Temp (°C) (2)			Derate (2)
10	400	500/420	**PWM**	**50**	**35**	**20**	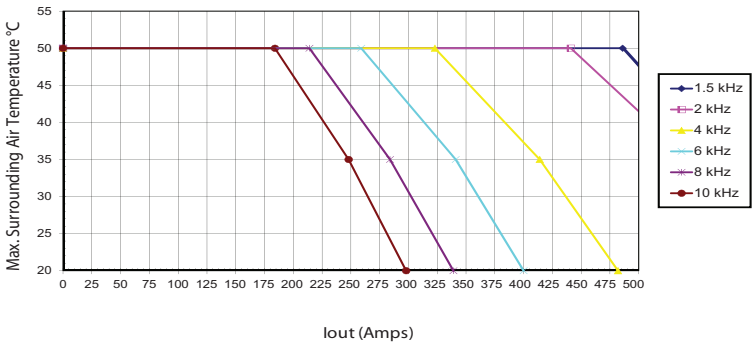
			1.5	486	573	546	
			2.0	441	545	618	
			4.0	323	414	482	
			6.0	259	341	400	
			8.0	214	284	284	
			10.0	184	248	298	
	600	416/325	**PWM**	**50**	**35**	**20**	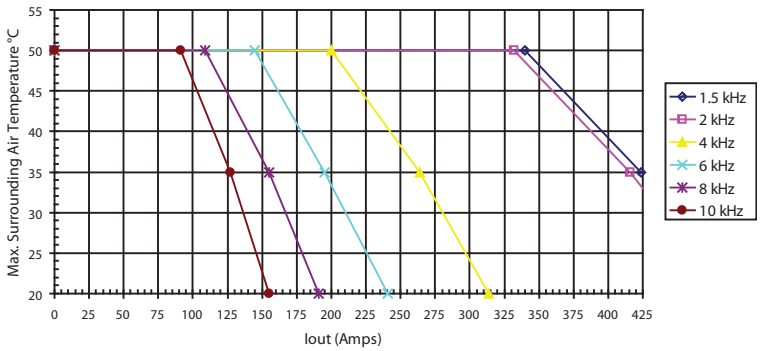
			1.5	340	424	492	
			2.0	332	416	486	
			4.0	200	264	314	
			6.0	145	195	241	
			8.0	109	155	191	
			10.0	91	127	155	

(1) Not all frequencies can be run on all drives.
(2) Ambient Temp / Max Surrounding Air Temperature is the air temperature surrounding the drive module. Rated temperature is 40/40 °C (ND/HD) for 400V class drives and 35/40 °C (ND/HD) for 600V class drives.

Frame	Voltage Class	ND/HD Rating (Amps)	Frequency (kHz) (1)	Ambient Temp (°C) (2)			Derate (2)
11	400	730/650	PWM	50	35	20	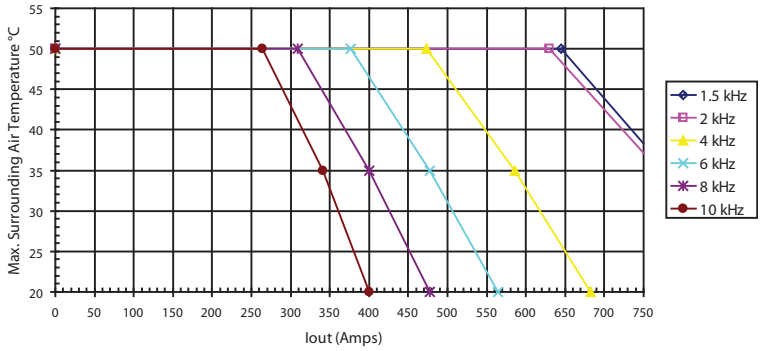
			1.5	645	780	886	
			2.0	630	770	856	
			4.0	473	586	682	
			6.0	377	477	564	
			8.0	309	400	477	
			10.0	264	341	400	
	600	590/502	PWM	50	35	20	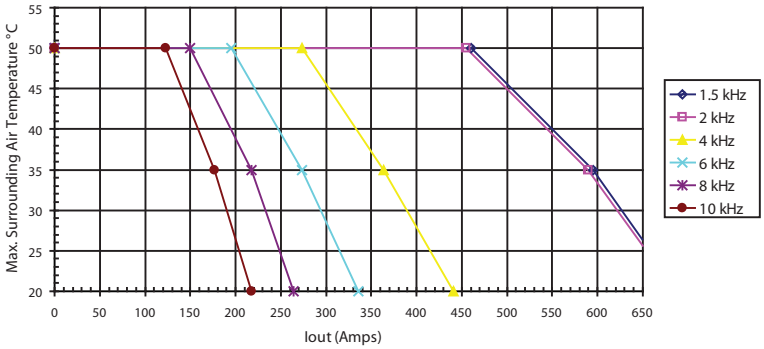
			1.5	460	595	690	
			2.0	455	590	686	
			4.0	273	364	441	
			6.0	195	273	336	
			8.0	150	218	264	
			10.0	123	177	218	

(1) Not all frequencies can be run on all drives.
(2) Ambient Temp / Max Surrounding Air Temperature is the air temperature surrounding the drive module. Rated temperature is 40/40 °C (ND/HD) for 400V class drives and 35/35 °C (ND/HD) for 600V class drives.

Frame	Voltage Class	ND/HD Rating (Amps)	Frequency (kHz) (1)	Ambient Temp (°C) (2)			Derate (2)
12	400	1030/920	**PWM**	**50**	**35**	**20**	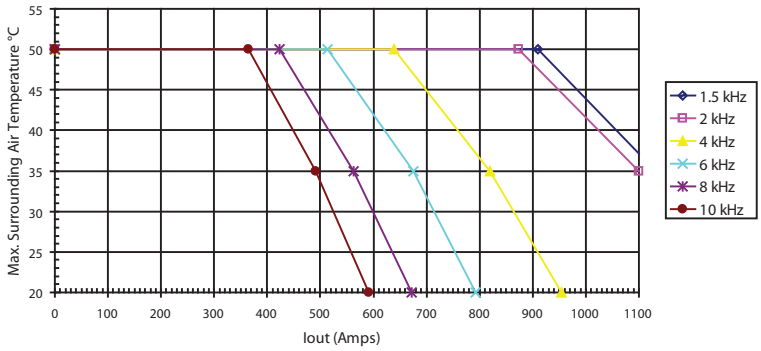
			1.5	910	1134	1278	
			2.0	873	1100	1224	
			4.0	639	819	954	
			6.0	513	675	792	
			8.0	423	562	672	
			10.0	364	492	591	
	600	820/650	**PWM**	**50**	**35**	**20**	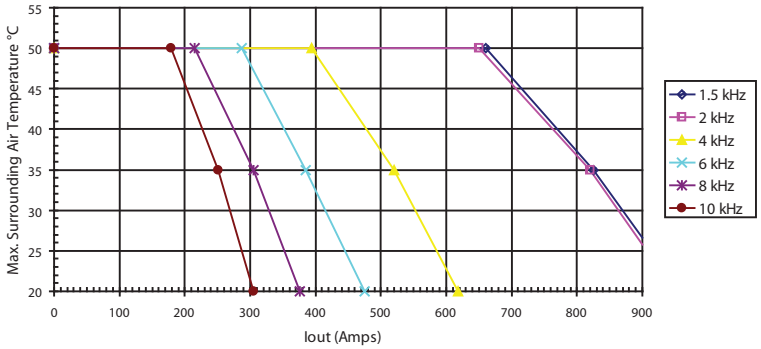
			1.5	660	825	959	
			2.0	650	820	950	
			4.0	394	520	618	
			6.0	287	385	475	
			8.0	215	305	376	
			10.0	179	251	305	

(1) Not all frequencies can be run on all drives.
(2) Ambient Temp / Max Surrounding Air Temperature is the air temperature surrounding the drive module. Rated temperature is 40/35 °C (ND/HD) for 400V class drives and 35/35 °C (ND/HD) for 600V class drives.

Frame	Voltage Class	ND/HD Rating (Amps)	Frequency (kHz) (1)	Ambient Temp (°C) (2)			Derate (2)
13	400	1450/1200	PWM	50	35	20	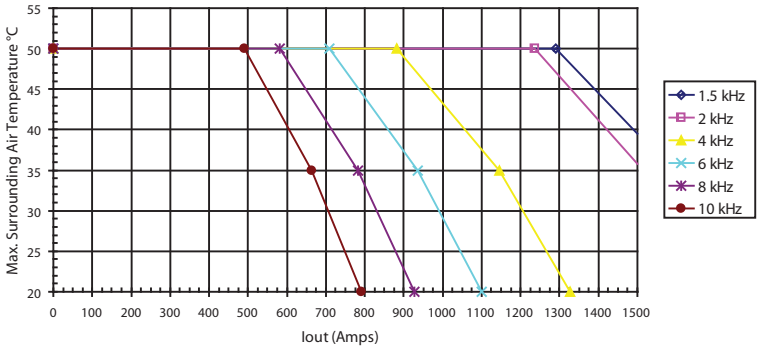
			1.5	1291	1591	1809	
			2.0	1236	1518	1727	
			4.0	882	1145	1327	
			6.0	709	936	1100	
			8.0	582	782	927	
			10.0	491	664	791	
	600	1180/1030	PWM	50	35	20	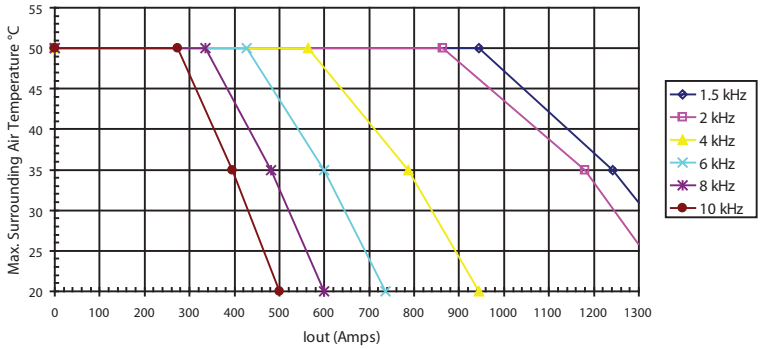
			1.5	945	1241	1457	
			2.0	864	1180	1374	
			4.0	564	786	945	
			6.0	427	600	736	
			8.0	336	482	600	
			10.0	273	395	500	

(1) Not all frequencies can be run on all drives.
(2) Ambient Temp / Max Surrounding Air Temperature is the air temperature surrounding the drive module. Rated temperature is 40/40 °C (ND/HD) for 400V class drive and 35/35 °C (ND/HD) for 600V class drive.

Frame	Voltage Class	ND/HD Rating (Amps)	Frequency (kHz) (1)	Ambient Temp (°C) (2)			Derate (2)
14	600	2250/1900	PWM	50	35	20	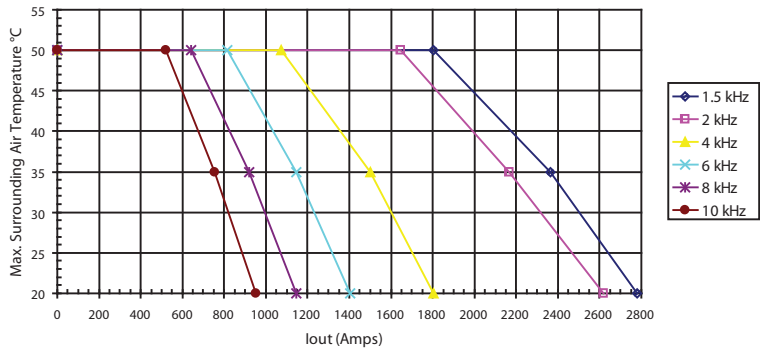
			1.5	1803	2366	2778	
			2.0	1647	2167	2620	
			4.0	1075	1499	1803	
			6.0	815	1144	1404	
			8.0	641	919	1144	
			10.0	520	754	953	

(1) Not all frequencies can be run on all drives.
(2) Ambient Temp / Max Surrounding Air Temperature is the air temperature surrounding the drive module. Rated temperature is 30/30 °C (ND/HD).

Watts Loss Curves - Frames 10…14

Frame	Voltage Class	Frequency (1)	Irated Amps			Watts Loss Curves
10	400V	PWM	@500	@460	@385	
		1.0 kHz	5766	5067	4097	
		2.0 kHz	5921	5335	4320	
		3.6 kHz	6183	5479	4459	
		6.0 kHz	6652	5695	4602	
		8.0 kHz	7043 (2)	5875 (2)	4722 (2)	
		10.0 kHz	7434 (2)	6055 (2)	4841 (2)	

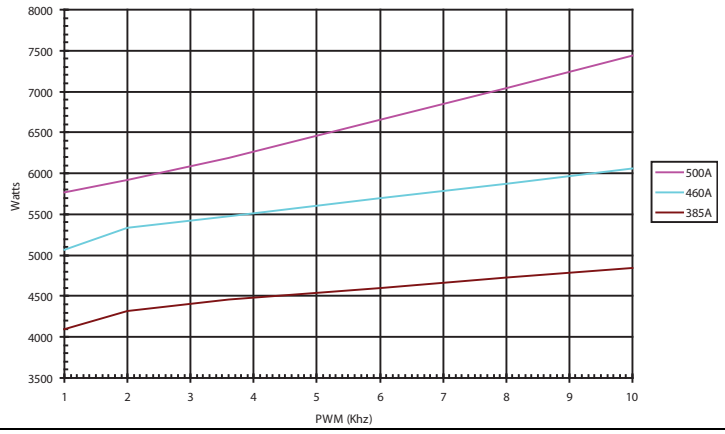

(1) Consult the factory for further derate information at other frequencies.
(2) Value that is calculated from slope.

Frame	Voltage Class	Frequency (1)	Irated Amps					Watts Loss Curves
10	600V	PWM	@416	@385	@325	@ 261	@ 205	
		1.0 kHz	5206	5223	4341	3854	3118	
		2.0 kHz	5622	5527	4751	4206	3413	
		3.6 kHz	6038	5831	5161	4559	3708	
		6.0 kHz	6825	6478	5571	5020	3982	

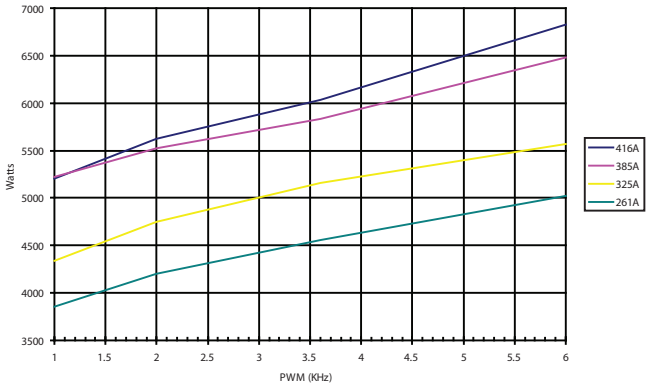

(1) Consult the factory for further derate information at other frequencies.

Frame	Voltage Class	Frequency (1)	Irated Amps			Watts Loss Curves
11	400V	PWM	@730	@650	@590	
		1.0 kHz	7886	7160	6279	
		2.0 kHz	8312	7538	6620	
		3.6 kHz	8680	7743	6833	
		6.0 kHz	9078	8049	7053	
		8.0 kHz	9410 (2)	8302 (2)	7236 (2)	
		10.0 kHz	9742 (2)	8556 (2)	7419 (2)	

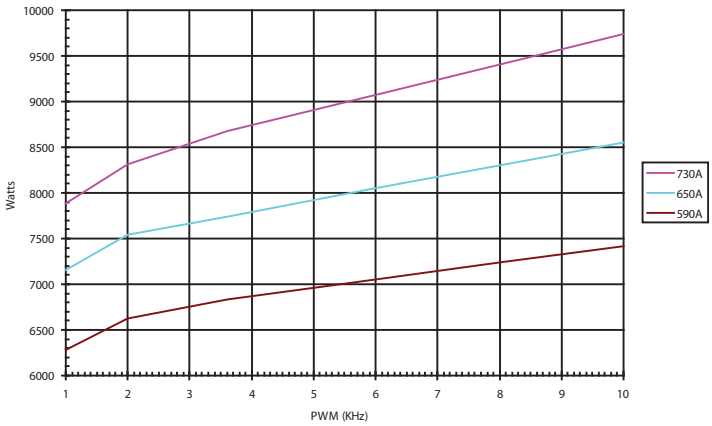

(1) Consult the factory for further derate information at other frequencies.
(2) Value that is calculated from slope.

Frame	Voltage Class	Frequency (1)	Irated Amps			Watts Loss Curves
11	600V	PWM	@590	@502	@460	
		1.0 kHz	6982	6327	5797	
		2.0 kHz	7539	6925	6345	
		3.6 kHz	8096	7522	6893	
		6.0 kHz	9152	8120	7441	

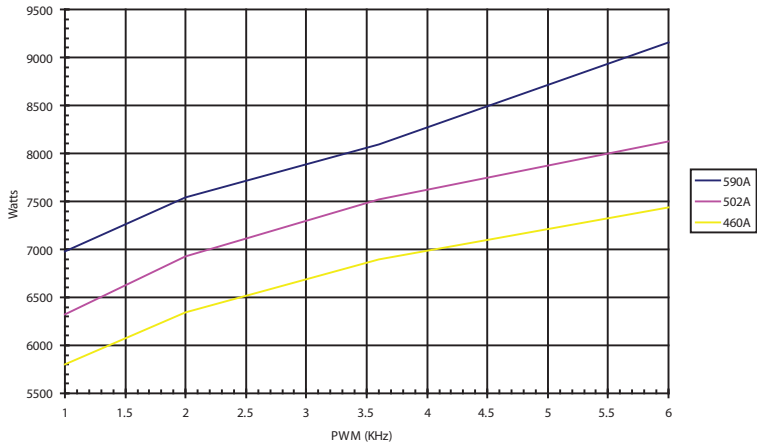

(1) Consult the factory for further derate information at other frequencies.

Frame	Voltage Class	Frequency (1)	Irated Amps			Watts Loss Curves
12	400V	PWM	@1030	@920	@820	
		1.0 kHz	11126	10135	8726	
		2.0 kHz	11729	10670	9200	
		3.6 kHz	12247	10959	9497	
		6.0 kHz	12809	11391	9802	
		8.0 kHz	13277 (2)	11751 (2)	10057 (2)	
		10.0 kHz	13745 (2)	12110 (2)	10311 (2)	

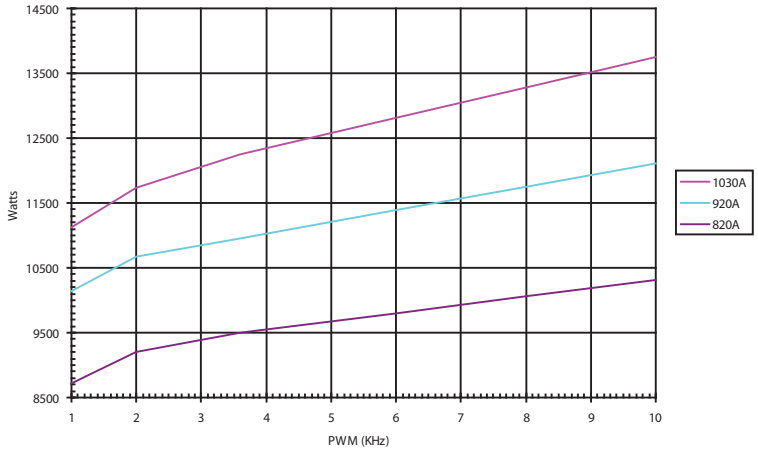

(1) Consult the factory for further derate information at other frequencies.
(2) Value that is calculated from slope.

Frame	Voltage Class	Frequency (1)	Irated Amps			Watts Loss Curves
12	600V	PWM	@820	@750	@650	
		1.0 kHz	10263	9781	8682	
		2.0 kHz	11082	10570	9502	
		3.6 kHz	11901	11358	10322	
		6.0 kHz	13453	12620	11143	

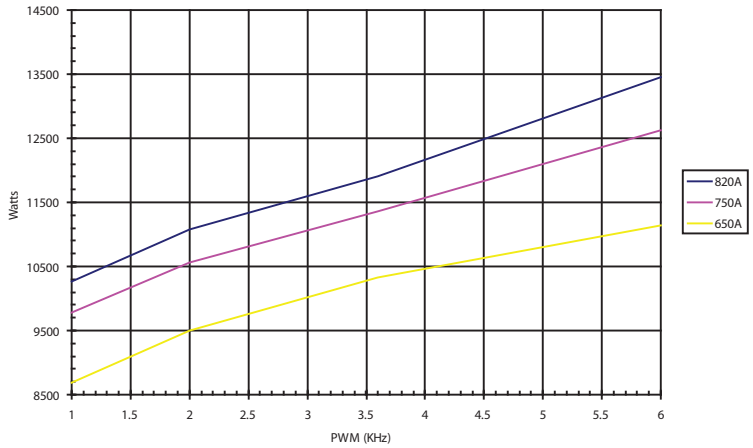

(1) Consult the factory for further derate information at other frequencies.

Frame	Voltage Class	Frequency (1)	Irated Amps		
13	400V	PWM	@1450	@1300	@1150
		1.0 kHz	15663	14321	13090
		2.0 kHz	16511	15077	13801
		3.6 kHz	17241	15485	14245
		6.0 kHz	18032	16096	14703
		8.0 kHz	18691 (2)	16604 (2)	15085 (2)
		10.0 kHz	19350 (2)	17113 (2)	15467 (2)

Watts Loss Curves

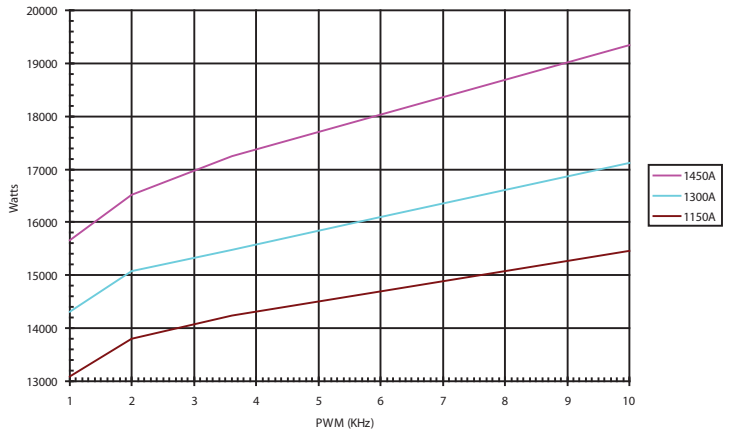

(1) Consult the factory for further derate information at other frequencies.
(2) Value that is calculated from slope.

Frame	Voltage Class	Frequency (1)	Irated Amps		
13	600V	PWM	@1180	@1030	@920
		1.0 kHz	16356	14533	11595
		2.0 kHz	17306	15907	12691
		3.6 kHz	18257	17280	13786
		6.0 kHz	20286	18653	14882

Watts Loss Curves

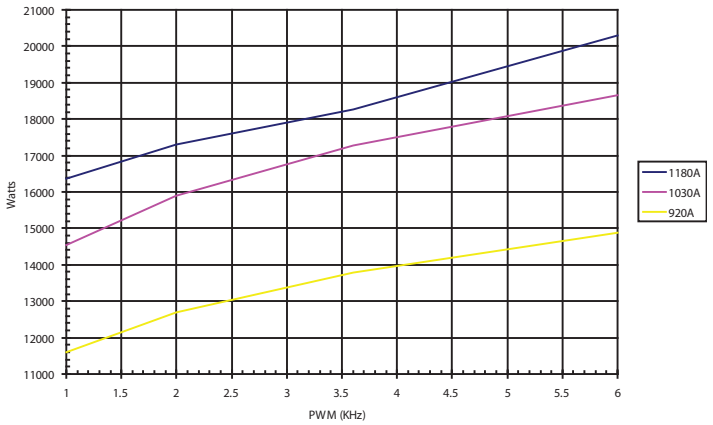

(1) Consult the factory for further derate information at other frequencies.

Frame	Voltage Class	Frequency (1)	Irated Amps		
14	600V	PWM	@1500	@1900	@2250
		1.0 kHz	20791	26335	31186
		2.0 kHz	22000	27866	33000
		3.6 kHz	23209	29397	34813
		6.0 kHz	25787	32664	38681

Watts Loss Curves

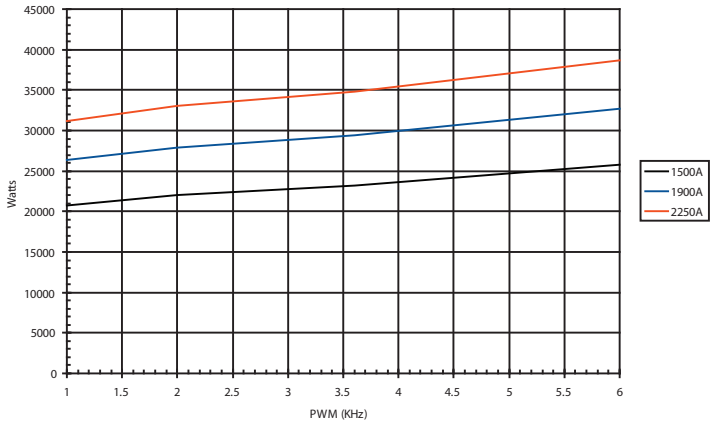

(1) Consult the factory for further derate information at other frequencies.

Notes:

Additional Resources

These documents contain additional information concerning related products from Rockwell Automation.

Resource	Description
Industrial Automation Wiring and Grounding Guidelines, publication 1770-4.1	Provides general guidelines for installing a Rockwell Automation industrial system.
Product Certifications website, http://rok.auto/certifications	Provides declarations of conformity, certificates, and other certification details.
PowerFlex 700S Phase II AC Drives Reference Manual, publication PFLEX-RM003	This manual provides detailed PowerFlex® 700S drive with Phase II control functions and application programming examples.
PowerFlex 700S Phase II AC Drives Programming Manual, publication 20D-PM001	This manual provides information that is needed to start up, program, and troubleshoot PowerFlex 700S Phase II Drives.
PowerFlex 700S Phase II, Frame 1...6, AC Drives Installation Instructions, publication 20D-IN024	This document provides information that is needed to install and wire a frame 1...6 PowerFlex 700S Phase II drive.
PowerFlex 700S and PowerFlex 700H Frames 9...14 Drives Installation Instructions, publication PFLEX-IN006	This document provides information that is needed to install and wire a frame 9...12 PowerFlex 700S Phase II drive.
Drives in Common Bus Configurations, publication DRIVES-AT002	Provides the necessary guidelines, considerations, and limitations for the proper application of PowerFlex drives, used in common bus configurations.
DriveLogix 5730 Controller for PowerFlex 700S Phase II Drives User Manual, publication 20D-UM003	This publication provides guidance on the development of projects for DriveLogix™ controllers.
Logix 5000 Controllers Common Procedures, publication 1756-PM001	This publication links to a collection of programming manuals that describe how you can use procedures that are common to all Logix 5000™ controller projects.
Logix 5000 Controllers General Instructions, publication 1756-RM003	This manual provides a programmer with details about each available instruction for a Logix-based controller.
Logix 5000 Controllers Process Control and Drives Instructions, publication 1756-RM006	This document provides a programmer with details about each available instruction for a Logix-based controller.
RSLogix 5000 Getting Results Guide, publication 9399-RLD300GR	This manual provides information on how to install and navigate RSLogix 5000®, troubleshooting information, and tips on how to use RSLogix 5000 effectively, and explains how to access and navigate the online help.
RSNetworx for ControlNet Getting Results Guide, publication CNET-GR001	This publication provides information on how to install and navigate the RSNetWorx™ for ControlNet software, explains how to effectively use the RSNetWorx for ControlNet software and how to access and navigate the online help.
RSLinx Classic Getting Results Guide, publication LINX-GR001	This guide provides information on how to install and navigate the RSLinx® Classic software, access and navigate the online help, and use the RSLinx Classic software.
Wiring and Grounding for PWM AC Drives, publication DRIVES-IN001	The purpose of this manual is to provide the basic information that is needed to properly wire and ground Pulse Width Modulated (PWM) AC drives.
Safety Guidelines for the Application, Installation, and Maintenance of Solid State Control, publication SGI-1.1	This publication provides general guidelines for the application, installation, and maintenance of solid state control in the form of individual devices or packaged assemblies incorporating solid state components.
Guarding Against Electrostatic Damage, publication 8000-4.5.2	This document explains the causes of ESD, and how you can guard against its effects.

You can view or download publications at rok.auto/literature.

Rockwell Automation Support

Use these resources to access support information.

Technical Support Center	Find help with how-to videos, FAQs, chat, user forums, and product notification updates.	rok.auto/support
Knowledgebase	Access Knowledgebase articles.	rok.auto/knowledgebase
Local Technical Support Phone Numbers	Locate the telephone number for your country.	rok.auto/phonesupport
Literature Library	Find installation instructions, manuals, brochures, and technical data publications.	rok.auto/literature
Product Compatibility and Download Center (PCDC)	Download firmware, associated files (such as AOP, EDS, and DTM), and access product release notes.	rok.auto/pcdc

Documentation Feedback

Your comments help us serve your documentation needs better. If you have any suggestions on how to improve our content, complete the form at rok.auto/docfeedback.

At the end of life, this equipment should be collected separately from any unsorted municipal waste.

Rockwell Automation maintains current product environmental compliance information on its website at rok.auto/pec.

Allen-Bradley, Connected Components Workbench, ControlFLASH, DriveExecutive, DriveGuard, DriveLogix, DriveObserver, DriveTools, expanding human possibility, Logix 5000, PowerFlex, Rockwell Automation, RSLinx, RSLogix 5000, RSNetWorx, SynchLink, and Zero-stacking are trademarks of Rockwell Automation, Inc.

EtherNet/IP is a trademark of ODVA, Inc.

Microsoft is a trademark of the Microsoft Corporation.

Trademarks not belonging to Rockwell Automation are property of their respective companies.

Rockwell Automation maintains current product environmental compliance information on its website at rok.auto/pec.

Rockwell Otomasyon Ticaret A.Ş. Kar Plaza İş Merkezi E Blok Kat:6 34752, İçerenköy, İstanbul, Tel: +90 (216) 5698400 EEE Yönetmeliğine Uygundur

Connect with us.

rockwellautomation.com — expanding **human possibility**™

AMERICAS: Rockwell Automation, 1201 South Second Street, Milwaukee, WI 53204-2496 USA, Tel: (1) 414.382.2000, Fax: (1) 414.382.4444
EUROPE/MIDDLE EAST/AFRICA: Rockwell Automation NV, Pegasus Park, De Kleetlaan 12a, 1831 Diegem, Belgium, Tel: (32) 2 663 0600, Fax: (32) 2 663 0640
ASIA PACIFIC: Rockwell Automation, Level 14, Core F, Cyberport 3, 100 Cyberport Road, Hong Kong, Tel: (852) 2887 4788, Fax: (852) 2508 1846

Publication 20D-TD002N-EN-P - June 2021
Supersedes Publication 20D-TD002M-EN-P - March 2020

Copyright © 2021 Rockwell Automation, Inc. All rights reserved. Printed in the U.S.A.