Technical Data

Allen-Bradley

Enclosure Specifications

Catalog Numbers 198E-A0S1, 198E-C0S1, 198E-C0S4, 198E-C2S4, 198E-C0S4R, 198E-C0C4R

Topic	Page
Product Description	2
Approximate Dimensions	3

LISTEN.
THINK.
SOLVE.®

Allen Bradley 198E-DF1488T | gesrepair.com

Product Description

Catalog Number	Push Button	Common Features
198E-A0S1	With Blue Reset Button	• Knockouts for 20 mm and 25 mm Metric Cable Glands • Sealable cover screws • No corrosive parts
198E-C0S1	With Blue Reset Button	
198E-C0S4(1)	With Green Start and Raised Red Stop/Reset Push Buttons	
198E-C2S4	Enclosure for DOL Starters for Start-Stop and Reset Operators	
198E-C0S4R	Enclosure for Reversing Starters with Cutouts for Start-Stop and Reset Operators	
198E-C0C4R	Enclosure for Reversing or DOL Starters with Cutouts for Start-Stop and Circuit Breaker Operating Handle	

(1) Starter Contact Kit included.

Standards Compliance

Cat. Nos. 198E-A_ and 198E-C_ plastic enclosures

- EN / IEC 62208
- EN / IEC 60947-4-1
- UL 50
- UL 508
- CSA 22.2, No. 14

Molded Plastic Lift-off

Certifications

Cat. No. 198E-C_ plastic enclosures

- CE Marked
- cULus Listed

Specifications

Plastic Enclosures	
Max. rated current (I_n max.) = Max. rated operational current (I_e) with Cat. No. 193-ED1/193-EE overload relays	25.0 A
Rated insulation voltage U_i (pollution degree 3)	690V
Dielectric strength	3750V rms
Ambient air temperature: With electronic overload relay Storage	 max. +40 °C (104 °F), average over 24h = 40 °C (104 °F) lower limit -20 °C (-4 °F) -55…+60 °C (-67…+140 °F)
Atmospheric conditions	95% relative humidity at max. +40 °C (104 °F)
Installation altitude	<2000 m (6561 ft) above sea level
Degree of protection: per IEC 60947-1 against external mechanical impacts per UL 50	 IP66 IK07 4/4X/12K
Mechanical lifetime with Start/Stop push buttons, Start/Stop operations	>100,000

Approximate Dimensions

Approximate dimensions are shown in millimeters (inches). Dimensions are not to be used for manufacturing purposes.

Cat. Nos. 198E-A0S1, -C0S1, and -C0S4 Plastic Enclosures

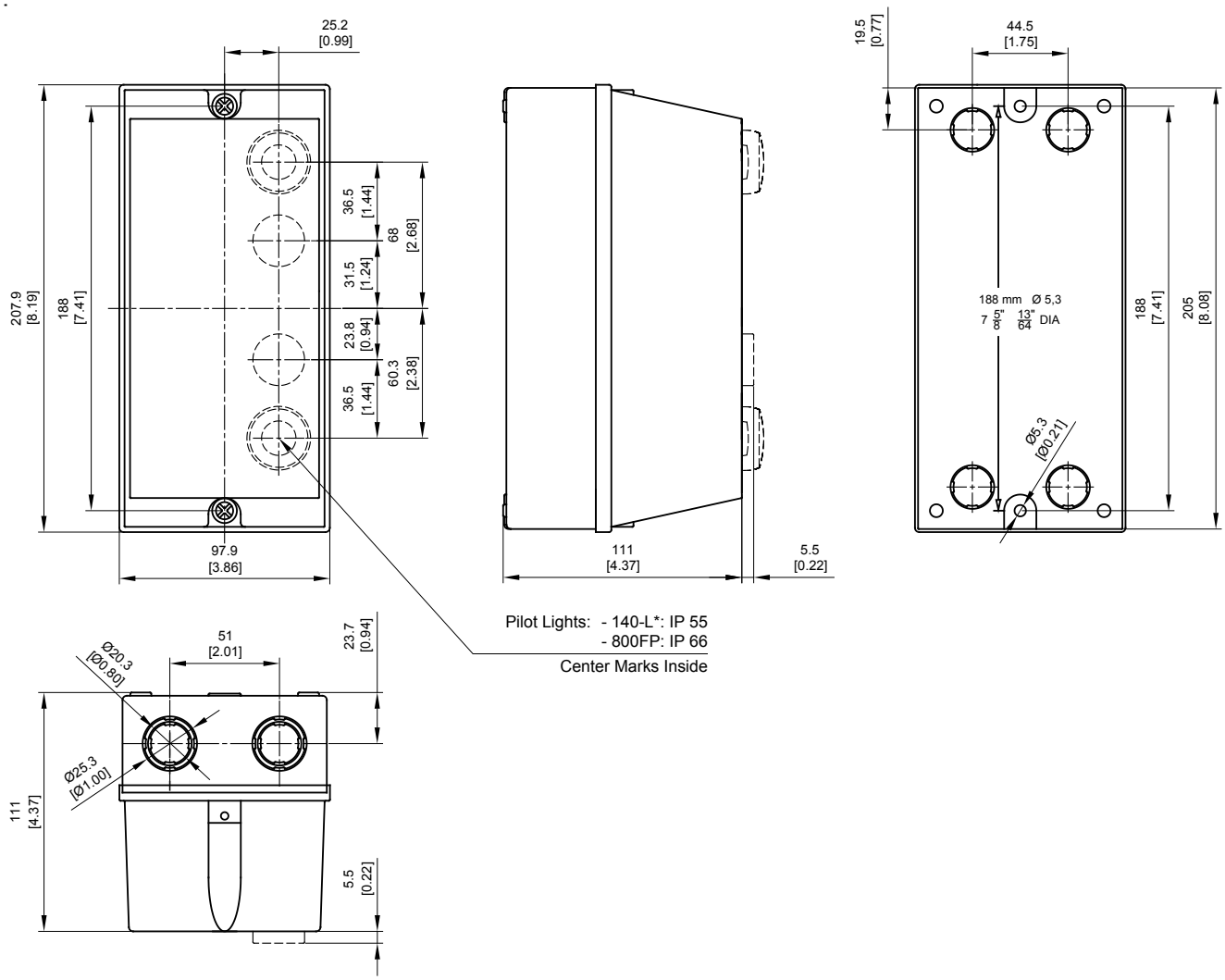

Cat. Nos. 198E-C2S4, -C0S4R, and -C0C4R Plastic Enclosures

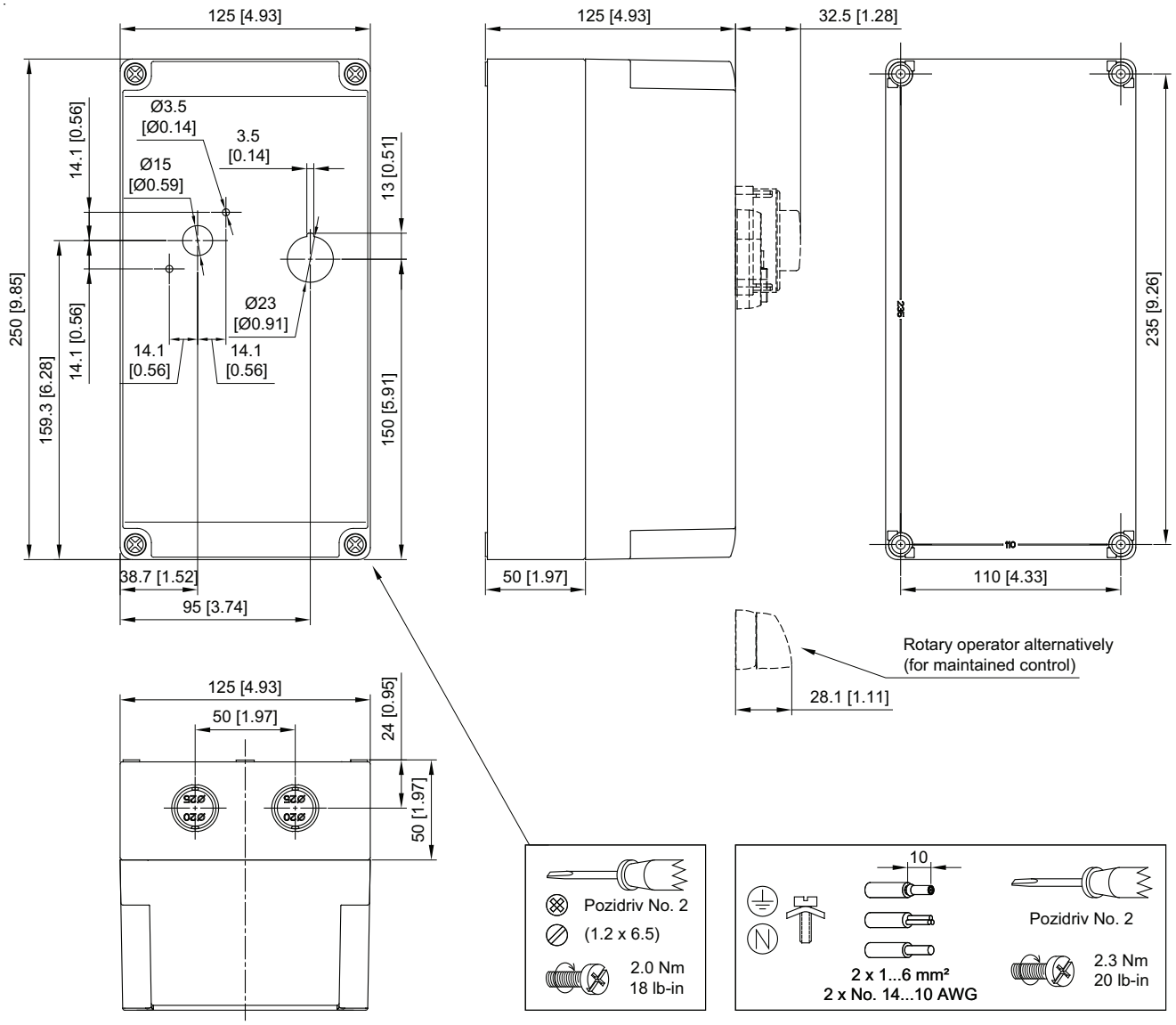

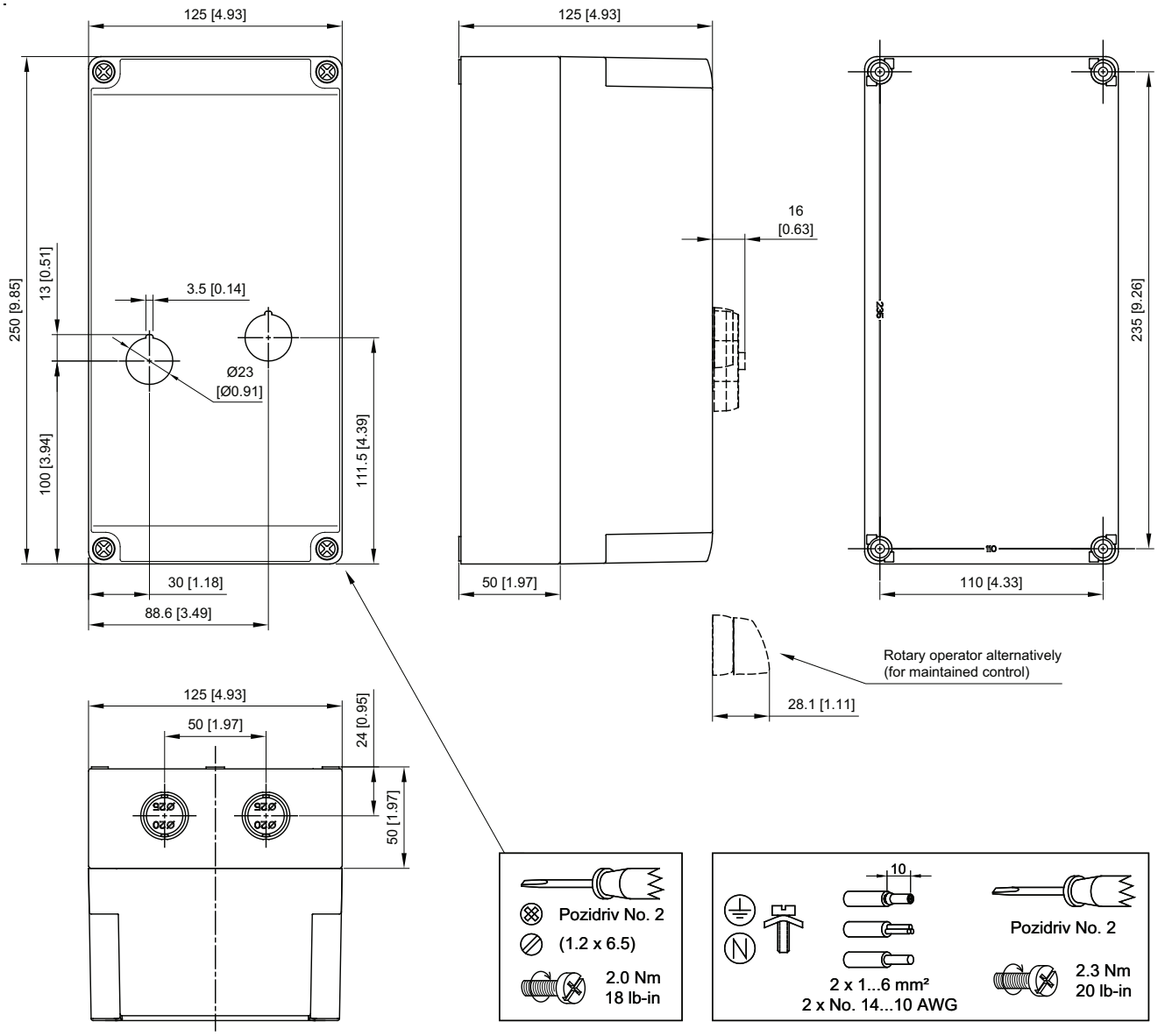
125 [4.93]
250 [9.85]
13 [0.51]
3.5 [0.14]
Ø23
[Ø0.91]
100 [3.94]
111.5 [4.39]
30 [1.18]
88.6 [3.49]
125 [4.93]
16
[0.63]
50 [1.97]
235 [9.26]
110 [4.33]
Rotary operator alternatively
(for maintained control)
28.1 [1.11]
125 [4.93]
50 [1.97]
24 [0.95]
50 [1.97]
Pozidriv No. 2
(1.2 x 6.5)
2.0 Nm
18 lb-in
10
2 x 1...6 mm²
2 x No. 14...10 AWG
Pozidriv No. 2
2.3 Nm
20 lb-in

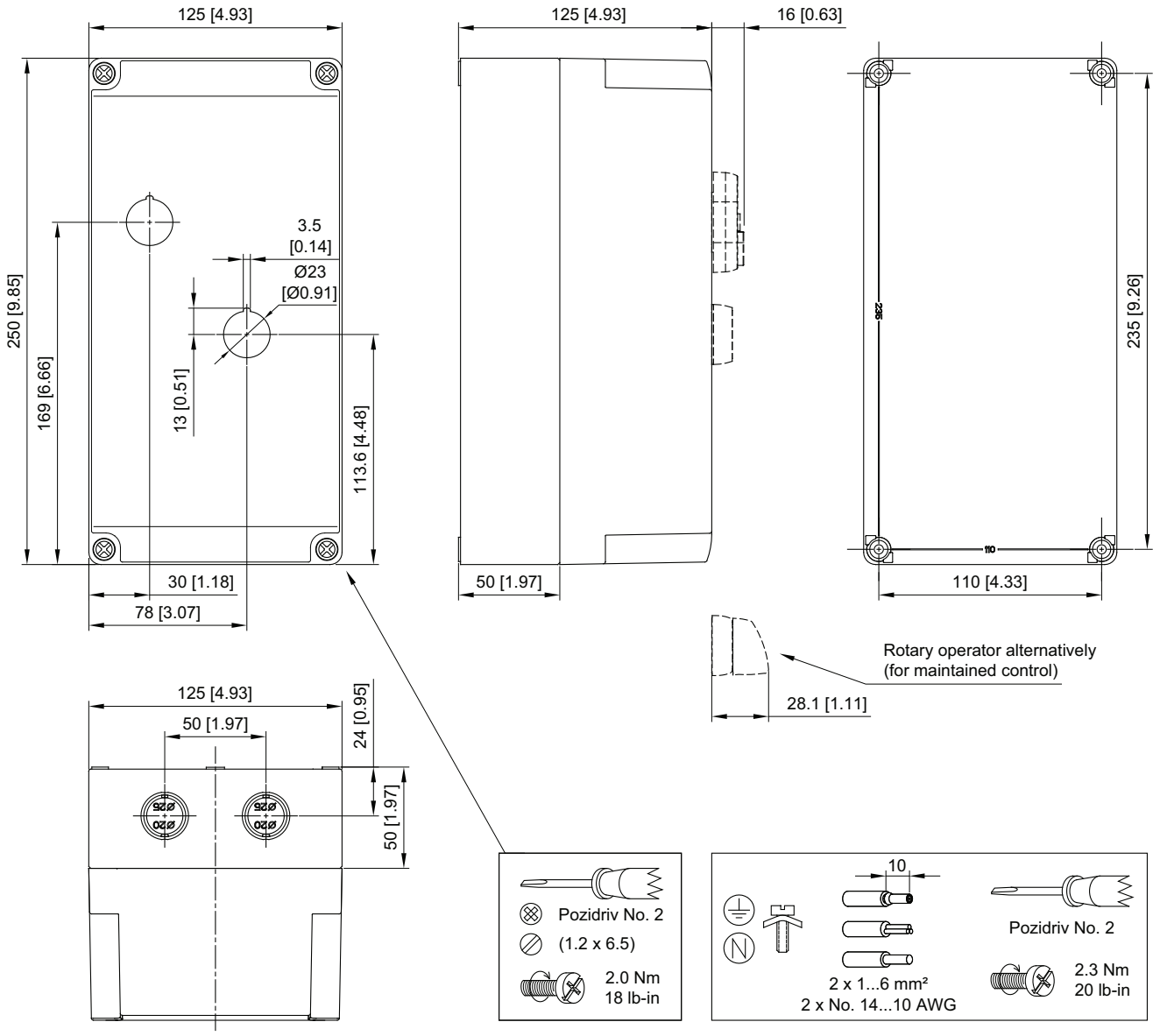
125 [4.93]
250 [9.85]
169 [6.66]
3.5
[0.14]
Ø23
[Ø0.91]
13 [0.51]
113.6 [4.48]
30 [1.18]
78 [3.07]
125 [4.93]
16 [0.63]
50 [1.97]
235 [9.26]
110 [4.33]
Rotary operator alternatively
(for maintained control)
28.1 [1.11]
125 [4.93]
50 [1.97]
24 [0.95]
50 [1.97]
Pozidriv No. 2
(1.2 x 6.5)
2.0 Nm
18 lb-in
10
2 x 1...6 mm²
2 x No. 14...10 AWG
Pozidriv No. 2
2.3 Nm
20 lb-in

Notes:

Additional Resources

These documents contain additional information concerning related products from Rockwell Automation.

Resource	Description
Industrial Automation Wiring and Grounding Guidelines, publication 1770-4.1	Provides general guidelines for installing a Rockwell Automation industrial system.
Product Certifications website, http://www.rockwellautomation.com/global/certification/overview.page	Provides declarations of conformity, certificates, and other certification details.

You can view or download publications at http://www.rockwellautomation.com/global/literature-library/overview.page. To order paper copies of technical documentation, contact your local Allen-Bradley distributor or Rockwell Automation sales representative.

Rockwell Automation Support

Use the following resources to access support information.

Technical Support Center	Knowledgebase Articles, How-to Videos, FAQs, Chat, User Forums, and Product Notification Updates.	www.rockwellautomation.com/knowledgebase
Local Technical Support Phone Numbers	Locate the phone number for your country.	www.rockwellautomation.com/global/support/get-support-now.page
Direct Dial Codes	Find the Direct Dial Code for your product. Use the code to route your call directly to a technical support engineer.	www.rockwellautomation.com/global/support/direct-dial.page
Literature Library	Installation Instructions, Manuals, Brochures, and Technical Data.	www.rockwellautomation.com/literature
Product Compatibility and Download Center (PCDC)	Get help determining how products interact, check features and capabilities, and find associated firmware.	www.rockwellautomation.com/global/support/pcdc.page

Documentation Feedback

Your comments will help us serve your documentation needs better. If you have any suggestions on how to improve this document, complete the How Are We Doing? form at http://literature.rockwellautomation.com/idc/groups/literature/

Rockwell Automation maintains current product environmental information on its website at http://www.rockwellautomation.com/rockwellautomation/about-us/sustainability-ethics/product-environmental-compliance.page.

Allen-Bradley, LISTEN. THINK. SOLVE., Rockwell Automation, and Rockwell Software are trademarks of Rockwell Automation, Inc.
Trademarks not belonging to Rockwell Automation are property of their respective companies.

Rockwell Otomasyon Ticaret A.Ş., Kar Plaza İş Merkezi E Blok Kat:6 34752 İçerenköy, İstanbul, Tel: +90 (216) 5698400

www.rockwellautomation.com

Power, Control and Information Solutions Headquarters

Americas: Rockwell Automation, 1201 South Second Street, Milwaukee, WI 53204-2496 USA, Tel: (1) 414.382.2000, Fax: (1) 414.382.4444
Europe/Middle East/Africa: Rockwell Automation NV, Pegasus Park, De Kleetlaan 12a, 1831 Diegem, Belgium, Tel: (32) 2 663 0600, Fax: (32) 2 663 0640
Asia Pacific: Rockwell Automation, Level 14, Core F, Cyberport 3, 100 Cyberport Road, Hong Kong, Tel: (852) 2887 4788, Fax: (852) 2508 1846

Publication 198-TD001B-EN-P - July 2018
Supersedes Publication 1497-TD001A-EN-P - September 2014

Copyright © 2018 Rockwell Automation, Inc. All rights reserved. Printed in the U.S.A.