Technical Data

Original Instructions

Allen-Bradley
by ROCKWELL AUTOMATION

SMC-3, SMC Flex, and SMC-50 Smart Motor Controller Specifications

Bulletin 150

Topic	Page
Summary of Changes	2
Overview	3
SMC Controllers	3
Control Mode Overview	4
SMC-3 Controllers	8
Catalog Number Explanation	8
Product Selection	9
Accessories	17
Specifications	19
Typical Wiring Diagrams	25
Overload Trip Curves	27
Starts per Hour Curves	28
Approximate Dimensions	30
SMC Flex Controllers	31
Catalog Number Explanation	31
Product Selection	32
Accessories	41
Specifications	44
Typical Wiring Diagrams	51
Approximate Dimensions and Shipping Weights	52

Topic	Page
SMC-50 Controllers	60
Catalog Number Explanation	60
Product Selection— SMC-50 Controller with Internal Bypass	61
Product Selection—SMC-50 Solid-state Controller	65
Accessories	75
Specifications	83
Typical Wiring Diagrams	99
Approximate Dimensions	102
Application Profiles	111
Reduced Voltage Starting	112
Solid-state Starters with SCRs	113
Industry Applications Matrix	115
Fans	118
Pumps	122
Conveyors	128
Centrifuge	132
Shock Loads	134
High-inertia Loads	136
Smart Motor Braking	141
Compressor	146
Tumbler	147
Slow Speed	150
Resistive Loads	152
Sizing and Selection Tools	158

Allen Bradley 153H-C43FBD-45 | gesrepair.com

Summary of Changes

This publication contains the following new or updated information. This list includes substantive updates only and is not intended to reflect all changes.

Topic	Page
Updated Product Selection data	9, 10, 11, 12
Updated Human Interface Modules (HIMs) and Communication Modules data	42
Updated Environmental Ratings data	49
Updated Solid-state Devices: Protection Device and Bypass Component Selection Overview—Line-connected Motor	95
Update Solid-state Devices: Protection Device and Bypass Component Selection—Delta-connected Motor data	97

Rockwell Automation offers a wide array of starting solutions that range from electromechanical to solid-state. Products that use these methods include across-the-line starters, Smart Motor Controllers (SMC™s), and variable frequency drives.

SMC Controllers

Allen-Bradley® SMC controllers are micro-processor based soft starters that are designed to maximize the efficiency of motor starts and stops. SMC controllers are designed to operate 3-phase motors. They feature built-in overload protection and use six silicon-controlled rectifiers (SCRs) (two per phase) to vary the conduction period and control the voltage (and thus, the torque) to the motor during starting, running, and stopping.

Once the motor has been started and is up to speed, full input voltage is applied to the motor. At this point, units with internal bypass power structures bridge the SCRs with their integral bypass contacts, which are rated for AC1 current levels. Bridging the SCR minimizes heat and allows a smaller product for space-conscious applications. In solid-state power structures, the SCRs are always in the circuit switching current. This allows increased robustness for harsher environments (such as shock-type loads) and more aggressive duty cycles.

Allen-Bradley SMCs are ideal for a wide range of applications. The product family consists of three major offerings.

SMC-3

Compact design provides true three-phase control, increased intelligence and unmatched performance. Motor and system diagnostics and an electronic overload with adjustable trip class reduce downtime and protect valuable assets.

- Compact footprint
- Easy and secure setup
- Integrated bypass
- Five start/stop modes

SMC Flex

Modular design features advanced intelligence, performance, and diagnostics; communications flexibility; removable control module, power modules, and fan assembly in a cost-effective package for your demanding production applications.

- Modular for simplified installation and maintenance
- Built-in LCD and keypad or personal computer (PC) software setup
- Integrated bypass
- Nine start/stop modes and three slow-speed modes
- Full metering and diagnostics

SMC-50

Designed for customer flexibility – advanced monitoring and protection, superior communications capabilities, and energy saver mode help increase efficiency and reduce downtime.

- Application scalability
  - Normal and heavy-duty ratings
  - Expandable I/O and sensor capability
  - Network integration capabilities
- LCD or personal computer PC software setup
- Integrated bypass or solid-state power structures available
- External bypass optional
- Seventeen start/stop modes and three slow-speed modes

Control Mode Overview

Allen-Bradley SMC controllers have multiple control modes available to control standard 3-phase induction motors, depending upon the product selected. For a full description of the control modes available for each product type, consult the appropriate product user manual.

Control Mode	Description	Diagram	Available With
Soft Start	Output voltage is ramped from user-adjustable initial torque setting out to user selectable start time.	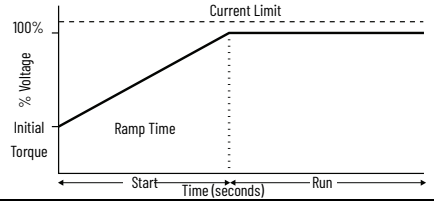	SMC-3 SMC Flex SMC-50
Kickstart	User-selectable voltage boost at startup to break away loads	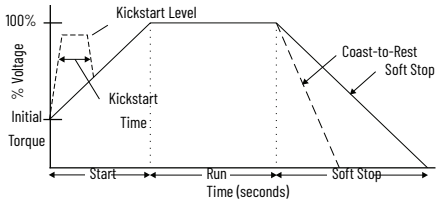	SMC-3 SMC Flex SMC-50
Current Limit	User-adjustable current limit start by maintaining a constant current to the motor.	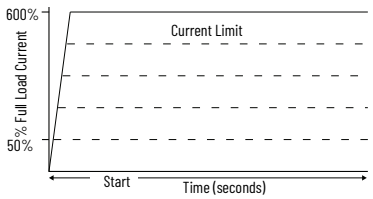	SMC-3 SMC Flex SMC-50
Pump Control	Used to reduce fluid surges during starting and/or stopping of a pump.	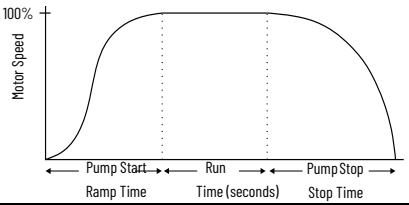	SMC Flex SMC-50
Sensorless Linear Speed Acceleration and Deceleration	Motor acceleration and deceleration are kept at a constant rate during starting and/or stopping. Presents the least amount of stress on mechanical components.	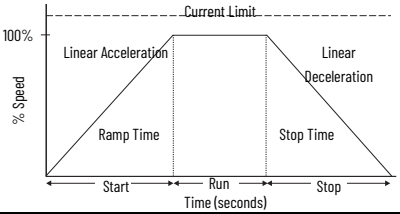	SMC-50

Control Mode	Description	Diagram	Available With
Torque Control	Provides a torque ramp from user-selectable initial torque setting to user-selectable maximum torque setting over the defined ramp time.	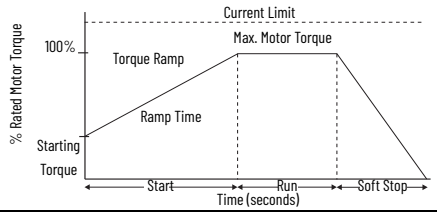	SMC-50
Dual Ramp Start	Ability to select between two start profiles with separately adjustable ramp times and initial torque levels.	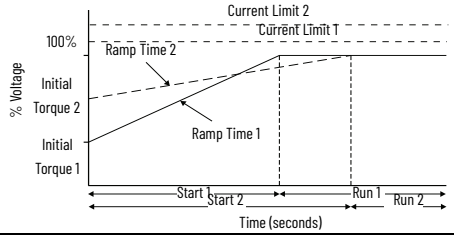	SMC Flex SMC-50
Full Voltage Start	Full-voltage start in which the SMC performs like a solid-state contactor.		SMC Flex SMC-50
Preset Slow Speed	Used on applications that require slow speed moves for positioning, alignment, or maintenance. Both forward and reverse motion are possible at user selectable speeds.	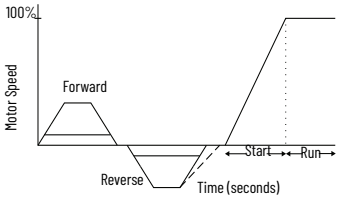	SMC Flex SMC-50
Coast	Voltage is removed and the motor coasts to rest.	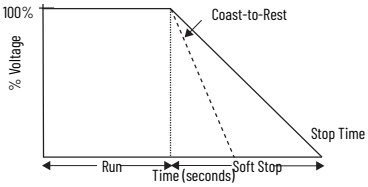	SMC-3 SMC Flex SMC-50
Soft Stop	Output voltage is ramped down from full voltage to zero voltage according to a user selectable ramp time.	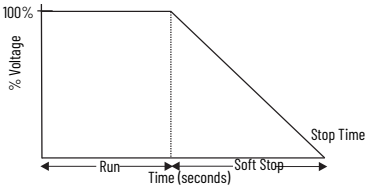	SMC-3 SMC Flex SMC-50
Smart Motor Braking (SMB™)	Provides motor braking for Braking applications that require stopping faster than a coast-to-rest.	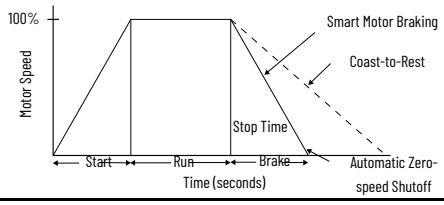	SMC Flex SMC-50

Control Mode	Description	Diagram	Available With
Slow Speed with Braking	Combines slow-speed operation with smart motor braking. Used in positioning or alignment.	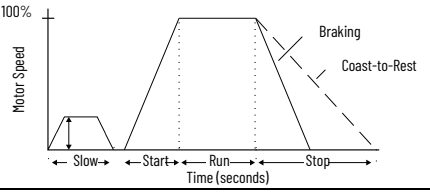	SMC Flex SMC-50
Accu-Stop™	Used for applications that require position stopping. Combines SMB and slow speed.	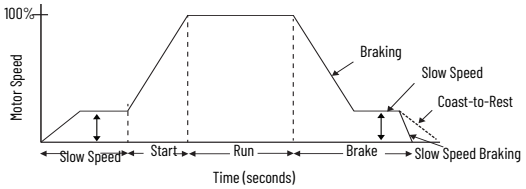	SMC Flex SMC-50(1)
Resistor Loads	Can directly control 3-phase resistive loads by using phase angle control that is based on a reference value. This mode is typically used for resistive heating applications.		Solid-state SMC-50

(1) Accu-Stop is not included as a parameter/function for the SMC-50 controller. However, the Accu-Stop function can be accomplished with the Stop Option and Slow Speed with Braking functions.

Controller Features[1]				
	SMC-3	SMC Flex	SMC-50 Controller	
			Solid-state	with Internal Bypass
	200...690V;	200...690V;	200...690V;	200...690V
	1...480 A	1...1250 A	90...520 A	108...480 A
Soft Start	S	S	S	S
Linear Acceleration/Deceleration	–	S	S	S
Torque Control	–	–	S	S
Kickstart	S	S	S	S
Pump Control	–	O	S	S
Current Limit	S	S	S	S
Dual Ramp Start	–	S	S	S
Full Voltage	–	S	S	S
Phase Rebalance	–	–	S	–
Soft Stop	S	S	S	S
Preset Slow Speed	–	S[2]	S[3]	S[3]
Dual Slow Speed Commands	–	–	S	S
SMB Smart Motor Braking	–	O	S	S
Accu-Stop	–	O	S[4]	S[4]
Slow Speed with Braking	–	O	S	S
Integrated Bypass Contactor (SMC-50 firmware rev. 5.XXX and higher)	S	S	–[5]	S
Integrated Motor Overload Protection	S	S	S	S
DPI™ Communication	–	S	S	S
Metering	–	S	S	S
Real Time Clock	–	–	S	S
Energy Saver Mode	–	–	S	–
Motor Winding Heater Function	–	[6]	S	S
Resistive Load Control (Firmware rev. 5.XXX and higher, solid-state devices only.)	–	–	S	–
Diagnostic Faults and Alarms	–	S	S	S
Parameter Configuration/Programming Tools	–	S	O	O
Human Interface Module (HIM)	–	O	O	O
Parameter Configuration Module	–	–	O	O
DriveExplorer™ and DriveExecutive™	–	O	O	O
Configuration Software: Connected Components Workbench	–	O	O	O
Network Communications	–	O	O	O
Inside-the-Delta Functionality	S	S	S	S
Individual Bit Enable of Faults and Alarms	–	–	S	S
Automatic Tuning of Motor Parameters	–	–	S	S
Digital I/O Expansion Module[7]	–	–	O	O
Analog I/O Expansion Module[7]	–	–	O	O
Ground Fault/CT/PTC Module[7]	–	–	O	O
DeviceLogix™ (Firmware rev. 4.XXX and higher.)	–	–	S	S

(1) S = Standard Feature; O = Optional Feature
(2) Limited slow speed capability
(3) Advanced slow speed capability
(4) Accu-Stop is not included as a parameter/function for the SMC-50 controller. However, the Accu-Stop function can be accomplished with the Stop Option and Slow Speed with Braking functions.
(5) You can add an external bypass contactor as an option.
(6) Option using a Bulletin 1410 motor winding heater
(7) With removable terminal block.

The compact design of the SMC-3 controller provides three-phase control, increased intelligence, and unmatched performance in a cost-effective package with overload protection, integrated bypass, and motor system diagnostics. DIP switches and a rotary dial make secure setup easy. This controller features an electronic overload with adjustable trip class.

Modes of operation include the following:

- Soft Start
- Current Limit Start
- Selectable Kickstart
- Coast-to-rest
- Soft Stop

Catalog Number Explanation

Examples that are given in this section are not intended to be used for product selection. Use ProposalWorks software to configure the SMC-3 controller. ProposalWorks software is available from rok.auto/systemtools.

150	–	C	30	N	B	D
a		b	c	d	e	f

a	
Bulletin Number	
Code	**Description**
150	Solid-state Controller

b	
Controller Type	
Code	**Description**
C	SMC-3

c	
Ampere Ratings	
Code	**Description**
3	3 A
9	9 A
16	16 A
19	19 A
25	25 A
30	30 A
37	37 A
43	43 A
60	60 A
85	85 A
108	108 A
135	135 A
201	201 A
251	251 A
317	317 A
361	361 A
480	480 A

d	
Enclosure Type	
Code	**Description**
N	Open

e	
Input Line Voltage	
Code	**Description**
B	200...460V AC, 3-Phase, 50/60 Hz
C	200...600V AC, 3-Phase, 50/60 Hz

f	
Control Voltage	
Code	**Description**
D	100...240V AC
R	24V AC/DC

Product Selection

For use with Line-connected Motors

Use the SMC Estimation Wizard and SMC Thermal Estimation Wizard to confirm that the SMC controller selection meets the application requirements. See Sizing and Selection Tools for more information. For additional assistance, visit rok.auto or contact Industrial Controls Technical Support by email at raictechsupport@ra.rockwell.com or by phone at +1 440-646-5800.

Table 1 - 200/208V AC SMC-3 Controllers for Use with Line-connected Motors

Rated Voltage [V AC]	Motor Current [A](1)	Max. kW, 50 Hz	Max. Hp, 60 Hz	Control Power	Open Type Cat. No.
200/208	1...3	–	0.5	100...240V AC, 50/60 Hz	150-C3NBD
		–		24V AC/DC	150-C3NBR
	3...9	–	0.75...2	100...240V AC, 50/60 Hz	150-C9NBD
		–		24V AC/DC	150-C9NBR
	5.3...16	–	1.5...3	100...240V AC, 50/60 Hz	150-C16NBD
		–		24V AC/DC	150-C16NBR
	6.3...19	–	1.5...3	100...240V AC, 50/60 Hz	150-C19NBD
		–		24V AC/DC	150-C19NBR
	8.3...25	–	3...7.5	100...240V AC, 50/60 Hz	150-C25NBD
		–		24V AC/DC	150-C25NBR
	10...30	–	3...7.5	100...240V AC, 50/60 Hz	150-C30NBD
		–		24V AC/DC	150-C30NBR
	12.3...37	–	5...10	100...240V AC, 50/60 Hz	150-C37NBD
		–		24V AC/DC	150-C37NBR
	14.3...43	–	5...10	100...240V AC, 50/60 Hz	150-C43NBD
		–		24V AC/DC	150-C43NBR
	20...60	–	7.5...15	100...240V AC, 50/60 Hz	150-C60NBD
		–		24V AC/DC	150-C60NBR
	28.3...85	–	10...25	100...240V AC, 50/60 Hz	150-C85NBD
		–		24V AC/DC	150-C85NBR
	27...108	–	20...30	100...240V AC, 50/60 Hz	150-C108NBD
		–		24V AC/DC(2)	150-C108NBR
	34...135	–	25...40	100...240V AC, 50/60 Hz	150-C135NBD
		–		24V AC/DC(2)	150-C135NBR
	67...201	–	40...60	100...240V AC, 50/60 Hz	150-C201NBD
		–		24V AC/DC(2)	150-C201NBR
	84...251	–	50...75	100...240V AC, 50/60 Hz	150-C251NBD
		–		24V AC/DC(2)	150-C251NBR
	106...317	–	60...100	100...240V AC, 50/60 Hz	150-C317NBD
		–		24V AC/DC(2)	150-C317NBR
	120...361	–	75...125	100...240V AC, 50/60 Hz	150-C361NBD
		–		24V AC/DC(2)	150-C361NBR
	160...480	–	100...150	100...240V AC, 50/60 Hz	150-C480NBD
		–		24V AC/DC(2)	150-C480NBR

(1) Motor FLA rating must fall within specified current range for unit to operate properly.
(2) Separate 120V or 240V single phase is required for fan operation.

Table 2 - 230V AC SMC-3 Controllers for Use with Line-connected Motors

Rated Voltage [V AC]	Motor Current [A](1)	Max. kW, 50 Hz	Max. Hp, 60 Hz	Control Power	Open Type Cat. No.
230	1...3	0.55	0.5	100...240V AC, 50/60 Hz	150-C3NBD
				24V AC/DC	150-C3NBR
	3...9	2.2	0.75...2	100...240V AC, 50/60 Hz	150-C9NBD
				24V AC/DC	150-C9NBR
	5.3...16	4	1.5...5	100...240V AC, 50/60 Hz	150-C16NBD
				24V AC/DC	150-C16NBR
	6.3...19	4	2...5	100...240V AC, 50/60 Hz	150-C19NBD
				24V AC/DC	150-C19NBR
	8.3...25	5.5	3...7.5	100...240V AC, 50/60 Hz	150-C25NBD
				24V AC/DC	150-C25NBR
	10...30	7.5	5...10	100...240V AC, 50/60 Hz	150-C30NBD
				24V AC/DC	150-C30NBR
	12.3...37	7.5	5...10	100...240V AC, 50/60 Hz	150-C37NBD
				24V AC/DC	150-C37NBR
	14.3...43	11	5...15	100...240V AC, 50/60 Hz	150-C43NBD
				24V AC/DC	150-C43NBR
	20...60	15	7.5...20	100...240V AC, 50/60 Hz	150-C60NBD
				24V AC/DC	150-C60NBR
	28.3...85	22	15...30	100...240V AC, 50/60 Hz	150-C85NBD
				24V AC/DC	150-C85NBR
	27...108	30	20...40	100...240V AC, 50/60 Hz	150-C108NBD
				24V AC/DC(2)	150-C108NBR
	34...135	37	25...50	100...240V AC, 50/60 Hz	150-C135NBD
				24V AC/DC(2)	150-C135NBR
	67...201	55	40...75	100...240V AC, 50/60 Hz	150-C201NBD
				24V AC/DC(2)	150-C201NBR
	84...251	75	50...100	100...240V AC, 50/60 Hz	150-C251NBD
				24V AC/DC(2)	150-C251NBR
	106...317	90	60...125	100...240V AC, 50/60 Hz	150-C317NBD
				24V AC/DC(2)	150-C317NBR
	120...361	110	75...150	100...240V AC, 50/60 Hz	150-C361NBD
				24V AC/DC(2)	150-C361NBR
	160...480	132	100...200	100...240V AC, 50/60 Hz	150-C480NBD
				24V AC/DC(2)	150-C480NBR

(1) Motor FLA rating must fall within specified current range for unit to operate properly.
(2) Separate 120V or 240V single phase is required for fan operation.

Table 3 - 380/400/415/460V AC SMC-3 Controllers for Use with Line-connected Motors

Rated Voltage [V AC]	Motor Current [A](1)	Max. kW, 50 Hz	Max. Hp, 60 Hz	Control Power	Open Type Cat. No.
380/400/415 (kW) 460 (Hp)	1...3	1.1	0.5...1.5	100...240V AC, 50/60 Hz	150-C3NBD
				24V AC/DC	150-C3NBR
	3...9	4	1.5...5	100...240V AC, 50/60 Hz	150-C9NBD
				24V AC/DC	150-C9NBR
	5.3...16	7.5	5...10	100...240V AC, 50/60 Hz	150-C16NBD
				24V AC/DC	150-C16NBR
	6.3...19	7.5	5...10	100...240V AC, 50/60 Hz	150-C19NBD
				24V AC/DC	150-C19NBR
	8.3...25	11	7.5...15	100...240V AC, 50/60 Hz	150-C25NBD
				24V AC/DC	150-C25NBR
	10...30	15	7.5...20	100...240V AC, 50/60 Hz	150-C30NBD
				24V AC/DC	150-C30NBR
	12.3...37	18.5	10...25	100...240V AC, 50/60 Hz	150-C37NBD
				24V AC/DC	150-C37NBR
	14.3...43	22	10...30	100...240V AC, 50/60 Hz	150-C43NBD
				24V AC/DC	150-C43NBR
	20...60	30	15...40	100...240V AC, 50/60 Hz	150-C60NBD
				24V AC/DC	150-C60NBR
	28.3...85	45	25...60	100...240V AC, 50/60 Hz	150-C85NBD
				24V AC/DC	150-C85NBR
	27...108	55	50...75	100...240V AC, 50/60 Hz	150-C108NBD
				24V AC/DC(2)	150-C108NBR
	34...135	75	60...100	100...240V AC, 50/60 Hz	150-C135NBD
				24V AC/DC(2)	150-C135NBR
	67...201	95...110	75...150	100...240V AC, 50/60 Hz	150-C201NBD
				24V AC/DC(2)	150-C201NBR
	84...251	95...132	100...200	100...240V AC, 50/60 Hz	150-C251NBD
				24V AC/DC(2)	150-C251NBR
	106...317	95...160	125...250	100...240V AC, 50/60 Hz	150-C317NBD
				24V AC/DC(2)	150-C317NBR
	120...361	110...200	250...300	100...240V AC, 50/60 Hz	150-C361NBD
				24V AC/DC(2)	150-C361NBR
	160...480	160...250	300...400	100...240V AC, 50/60 Hz	150-C480NBD
				24V AC/DC(2)	150-C480NBR

(1) Motor FLA rating must fall within specified current range for unit to operate properly.
(2) Separate 120V or 240V single phase is required for fan operation.

Table 4 - 500/575V AC SMC-3 Controllers for Use with Line-connected Motors

Rated Voltage [V AC]	Motor Current [A](1)	Max. kW, 50 Hz	Max. Hp, 60 Hz	Control Power	Open Type Cat. No.
500 (kW) 575 (Hp)	1...3	1.5	0.75...2	100...240V AC, 50/60 Hz	150-C3NCD
				24V AC/DC	150-C3NCR
	3...9	5.5	3...7.5	100...240V AC, 50/60 Hz	150-C9NCD
				24V AC/DC	150-C9NCR
	5.3...16	7.5	5...10	100...240V AC, 50/60 Hz	150-C16NCD
				24V AC/DC	150-C16NCR
	6.3...19	11	7.5...15	100...240V AC, 50/60 Hz	150-C19NCD
				24V AC/DC	150-C19NCR
	8.3...25	15	7.5...20	100...240V AC, 50/60 Hz	150-C25NCD
				24V AC/DC	150-C25NCR
	10...30	18.5	10...25	100...240V AC, 50/60 Hz	150-C30NCD
				24V AC/DC	150-C30NCR
	12.3...37	22	15...30	100...240V AC, 50/60 Hz	150-C37NCD
				24V AC/DC	150-C37NCR
	14.3...43	22	15...40	100...240V AC, 50/60 Hz	150-C43NCD
				24V AC/DC	150-C43NCR
	20...60	37	20...50	100...240V AC, 50/60 Hz	150-C60NCD
				24V AC/DC	150-C60NCR
	28.3...85	55	30...75	100...240V AC, 50/60 Hz	150-C85NCD
				24V AC/DC	150-C85NCR
	27...108	75	60...100	100...240V AC, 50/60 Hz	150-C108NCD
				24V AC/DC(2)	150-C108NCR
	34...135	90	75...125	100...240V AC, 50/60 Hz	150-C135NCD
				24V AC/DC(2)	150-C135NCR
	67...201	75...132	100...200	100...240V AC, 50/60 Hz	150-C201NCD
				24V AC/DC(2)	150-C201NCR
	84...251	90...160	125...250	100...240V AC, 50/60 Hz	150-C251NCD
				24V AC/DC(2)	150-C251NCR
	106...317	100...200	200...300	100...240V AC, 50/60 Hz	150-C317NCD
				24V AC/DC(2)	150-C317NCR
	120...361	132...250	200...350	100...240V AC, 50/60 Hz	150-C361NCD
				24V AC/DC(2)	150-C361NCR
	160...480	200...315	250...500	100...240V AC, 50/60 Hz	150-C480NCD
				24V AC/DC(2)	150-C480NCR

(1) Motor FLA rating must fall within specified current range for unit to operate properly.
(2) Separate 120V or 240V single phase is required for fan operation.

For use with Delta-connected Motors

Use the SMC Estimation Wizard and SMC Thermal Estimation Wizard to confirm that the SMC controller selection meets the application requirements. See Sizing and Selection Tools for more information. For additional assistance, visit rok.auto or contact Industrial Controls Technical Support by email at raictechsupport@ra.rockwell.com or by phone at +1 440-646-5800.

Table 5 - 200/208V AC SMC-3 Controllers for Use with Delta-connected Motors

Rated Voltage [V AC]	Motor Current [A][1]	Max. kW, 50 Hz	Max. Hp, 60 Hz	Control Power	Open Type Cat. No.
200/208	1.7...5.1	–	1	100...240V AC, 50/60 Hz	150-C3NBD
		–		24V AC/DC	150-C3NBR
	5.1...16	–	1.5...3	100...240V AC, 50/60 Hz	150-C9NBD
		–		24V AC/DC	150-C9NBR
	9.1...27.6	–	3...7.5	100...240V AC, 50/60 Hz	150-C16NBD
		–		24V AC/DC	150-C16NBR
	10.9...32.8	–	3...10	100...240V AC, 50/60 Hz	150-C19NBD
		–		24V AC/DC	150-C19NBR
	14.3...43	–	3...10	100...240V AC, 50/60 Hz	150-C25NBD
		–		24V AC/DC	150-C25NBR
	17.3...52	–	5...10	100...240V AC, 50/60 Hz	150-C30NBD
		–		24V AC/DC	150-C30NBR
	21...64	–	7.5...20	100...240V AC, 50/60 Hz	150-C37NBD
		–		24V AC/DC	150-C37NBR
	25...74	–	7.5...20	100...240V AC, 50/60 Hz	150-C43NBD
		–		24V AC/DC	150-C43NBR
	34.6...104	–	15...30	100...240V AC, 50/60 Hz	150-C60NBD
		–		24V AC/DC	150-C60NBR
	50...147	–	15...40	100...240V AC, 50/60 Hz	150-C85NBD
		–		24V AC/DC	150-C85NBR
	47...187	–	20...60	100...240V AC, 50/60 Hz	150-C108NBD
		–		24V AC/DC[2]	150-C108NBR
	59...234	–	20...75	100...240V AC, 50/60 Hz	150-C135NBD
		–		24V AC/DC[2]	150-C135NBR
	116...348	–	75...100	100...240V AC, 50/60 Hz	150-C201NBD
		–		24V AC/DC[2]	150-C201NBR
	145...435	–	100...150	100...240V AC, 50/60 Hz	150-C251NBD
		–		24V AC/DC[2]	150-C251NBR
	183...549	–	100...200	100...240V AC, 50/60 Hz	150-C317NBD
		–		24V AC/DC[2]	150-C317NBR
	208...625	–	125...200	100...240V AC, 50/60 Hz	150-C361NBD
		–		24V AC/DC[2]	150-C361NBR
	277...831	–	200...300	100...240V AC, 50/60 Hz	150-C480NBD
		–		24V AC/DC[2]	150-C480NBR

(1) Motor FLA rating must fall within specified current range for unit to operate properly.
(2) Separate 120V or 240V single phase is required for fan operation.

Table 6 - 230V AC SMC-3 Controllers for Use with Delta-connected Motors

Rated Voltage [V AC]	Motor Current [A][1]	Max. kW, 50 Hz	Max. Hp, 60 Hz	Control Power	Open Type Cat. No.
230	1.7...5.1	0.25...1.1	1	100...240V AC, 50/60 Hz	150-C3NBD
				24V AC/DC	150-C3NBR
	5.1...16	1.1...4	1...5	100...240V AC, 50/60 Hz	150-C9NBD
				24V AC/DC	150-C9NBR
	9.1...27.6	2.2...7.5	3...7.5	100...240V AC, 50/60 Hz	150-C16NBD
				24V AC/DC	150-C16NBR
	10.9...32.8	2.2...7.5	3...10	100...240V AC, 50/60 Hz	150-C19NBD
				24V AC/DC	150-C19NBR
	14.3...43	4...11	3...15	100...240V AC, 50/60 Hz	150-C25NBD
				24V AC/DC	150-C25NBR
	17.3...52	4...15	5...15	100...240V AC, 50/60 Hz	150-C30NBD
				24V AC/DC	150-C30NBR
	21...64	5.5...18.5	7.5...20	100...240V AC, 50/60 Hz	150-C37NBD
				24V AC/DC	150-C37NBR
	25...74	5.5...22	7.5...25	100...240V AC, 50/60 Hz	150-C43NBD
				24V AC/DC	150-C43NBR
	34.6...104	7.5...30	15...40	100...240V AC, 50/60 Hz	150-C60NBD
				24V AC/DC	150-C60NBR
	50...147	15...45	20...50	100...240V AC, 50/60 Hz	150-C85NBD
				24V AC/DC	150-C85NBR
	47...187	55	20...60	100...240V AC, 50/60 Hz	150-C108NBD
				24V AC/DC[2]	150-C108NBR
	59...234	75	25...75	100...240V AC, 50/60 Hz	150-C135NBD
				24V AC/DC[2]	150-C135NBR
	116...348	110	75...125	100...240V AC, 50/60 Hz	150-C201NBD
				24V AC/DC[2]	150-C201NBR
	145...435	132	100...150	100...240V AC, 50/60 Hz	150-C251NBD
				24V AC/DC[2]	150-C251NBR
	183...549	160	125...200	100...240V AC, 50/60 Hz	150-C317NBD
				24V AC/DC[2]	150-C317NBR
	208...625	200	150...250	100...240V AC, 50/60 Hz	150-C361NBD
				24V AC/DC[2]	150-C361NBR
	277...831	250	200...300	100...240V AC, 50/60 Hz	150-C480NBD
				24V AC/DC[2]	150-C480NBR

(1) Motor FLA rating must fall within specified current range for unit to operate properly.
(2) Separate 120V or 240V single phase is required for fan operation.

Table 7 - 380/400/415/460V AC SMC-3 Controllers for Use with Delta-connected Motors

Rated Voltage [V AC]	Motor Current [A][1]	Max. kW, 50 Hz	Max. Hp, 60 Hz	Control Power	Open Type Cat. No.
380/400/415 (kW) 460 (Hp)	1.7...5.1	0.55...2.2	0.5...2	100...240V AC, 50/60 Hz	150-C3NBD
				24V AC/DC	150-C3NBR
	5.1...16	2.2...7.5	2...7.5	100...240V AC, 50/60 Hz	150-C9NBD
				24V AC/DC	150-C9NBR
	9.1...27.6	4...11	5...15	100...240V AC, 50/60 Hz	150-C16NBD
				24V AC/DC	150-C16NBR
	10.9...32.8	4...15	5...15	100...240V AC, 50/60 Hz	150-C19NBD
				24V AC/DC	150-C19NBR
	14.3...43	5.5...22	7.5...20	100...240V AC, 50/60 Hz	150-C25NBD
				24V AC/DC	150-C25NBR
	17.3...52	7.5...22	7.5...30	100...240V AC, 50/60 Hz	150-C30NBD
				24V AC/DC	150-C30NBR
	21...64	7.5...30	10...40	100...240V AC, 50/60 Hz	150-C37NBD
				24V AC/DC	150-C37NBR
	25...74	11...37	10...50	100...240V AC, 50/60 Hz	150-C43NBD
				24V AC/DC	150-C43NBR
	34.6...104	15...55	20...75	100...240V AC, 50/60 Hz	150-C60NBD
				24V AC/DC	150-C60NBR
	50...147	22...75	25...100	100...240V AC, 50/60 Hz	150-C85NBD
				24V AC/DC	150-C85NBR
	47...187	90	40...125	100...240V AC, 50/60 Hz	150-C108NBD
				24V AC/DC[2]	150-C108NBR
	59...234	132	50...150	100...240V AC, 50/60 Hz	150-C135NBD
				24V AC/DC[2]	150-C135NBR
	116...348	160	150...250	100...240V AC, 50/60 Hz	150-C201NBD
				24V AC/DC[2]	150-C201NBR
	145...435	250	200...350	100...240V AC, 50/60 Hz	150-C251NBD
				24V AC/DC[2]	150-C251NBR
	183...549	315	250...450	100...240V AC, 50/60 Hz	150-C317NBD
				24V AC/DC[2]	150-C317NBR
	208...625	355	300...500	100...240V AC, 50/60 Hz	150-C361NBD
				24V AC/DC[2]	150-C361NBR
	277...831	450	350...700	100...240V AC, 50/60 Hz	150-C480NBD
				24V AC/DC[2]	150-C480NBR

(1) Motor FLA rating must fall within specified current range for unit to operate properly.
(2) Separate 120V or 240V single phase is required for fan operation.

Table 8 - 500/575V AC SMC-3 Controllers for Use with Delta-connected Motors

Rated Voltage [V AC]	Motor Current [A][1]	Max. kW, 50 Hz	Max. Hp, 60 Hz	Control Power	Open Type Cat. No.
500 (kW) 575 (Hp)	1.7...5.1	0.75...3	1...3	100...240V AC, 50/60 Hz	150-C3NCD
				24V AC/DC	150-C3NCR
	5.1...16	3...7.5	3...10	100...240V AC, 50/60 Hz	150-C9NCD
				24V AC/DC	150-C9NCR
	9.1...27.6	5.5...15	7.5...20	100...240V AC, 50/60 Hz	150-C16NCD
				24V AC/DC	150-C16NCR
	10.9...32.8	5.5...22	7.5...30	100...240V AC, 50/60 Hz	150-C19NCD
				24V AC/DC	150-C19NCR
	14.3...43	7.5...22	10...40	100...240V AC, 50/60 Hz	150-C25NCD
				24V AC/DC	150-C25NCR
	17.3...52	11...30	15...50	100...240V AC, 50/60 Hz	150-C30NCD
				24V AC/DC	150-C30NCR
	21...64	11...37	15...60	100...240V AC, 50/60 Hz	150-C37NCD
				24V AC/DC	150-C37NCR
	25...74	15...45	20...60	100...240V AC, 50/60 Hz	150-C43NCD
				24V AC/DC	150-C43NCR
	34.6...104	22...55	30...100	100...240V AC, 50/60 Hz	150-C60NCD
				24V AC/DC	150-C60NCR
	50...147	30...90	40...150	100...240V AC, 50/60 Hz	150-C85NCD
				24V AC/DC	150-C85NCR
	47...187	132	50...150	100...240V AC, 50/60 Hz	150-C108NCD
				24V AC/DC[2]	150-C108NCR
	59...234	160	60...200	100...240V AC, 50/60 Hz	150-C135NCD
				24V AC/DC[2]	150-C135NCR
	116...348	250	250...300	100...240V AC, 50/60 Hz	150-C201NCD
				24V AC/DC[2]	150-C201NCR
	145...435	315	250...400	100...240V AC, 50/60 Hz	150-C251NCD
				24V AC/DC[2]	150-C251NCR
	183...549	400	300...500	100...240V AC, 50/60 Hz	150-C317NCD
				24V AC/DC[2]	150-C317NCR
	208...625	450	350...600	100...240V AC, 50/60 Hz	150-C361NCD
				24V AC/DC[2]	150-C361NCR
	277...831	560	400...900	100...240V AC, 50/60 Hz	150-C480NCD
				24V AC/DC[2]	150-C480NCR

(1) Motor FLA rating must fall within specified current range for unit to operate properly.
(2) Separate 120V or 240V single phase is required for fan operation.

Accessories

Table 9 - Auxiliary Contact Blocks

Description	N.O.	N.C.	Connection Diagram	Cat. No.
 Auxiliary Contact Blocks for side mounting with sequence terminal designations • 1- and 2-pole • Quick and easy mounting without tools • One block per device only	1	0	 -CA10	150-CA10
	2	0	 -CA20	150-CA20
	0	1	 -CA01	150-CA01
	1	1	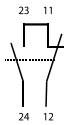 -CA11	150-CA11 (Form C)

Table 10 - Fans

Description		For Use With	Pkg. Qty.	Cat. No.
 Fan • Field installed	Optional	150-C3...37	1	150-CF64
	Replacement	150-C43...85		150-CF147
		150-C108, 150-C135		41391-801-03
		150-C201, 150-C251		41391-801-01
		150-C317...C480		41391-801-02

Table 11 - Connecting Modules

Description	For Use With	Pkg. Qty.	Cat. No.
 Connecting modules to 140-M • Electrical interconnection between SMC-3 and 140-M. • Motor protector and SMC-3 must be mounted separately.	Connects 140-M-C to 150-C3...25	1	150-CC25
	Connects 140-M-D to 150-C3...25	1	150-CD25
	Connects 140-M-F to 150-C3...37	1	150-CF45
 Connecting modules to 100-C • Electrical interconnection between SMC-3 and 100-C. • Contactor and SMC-3 must be mounted separately.	Connects 100-C09...23 to 150-C3...19	1	150-CI23
	Connects 100-C30...37 to 150-C3...37	1	150-CI37

Do not place protective modules on the load side of a device when using an inside-the-delta connection.

Table 12 - Protective Modules

Description		For Use With	Pkg. Qty.	Cat. No.
	480V Protective Module	150-C3...37NB	1	150-C84
		150-C43...85NB	1	150-C84P
		150-C108...480NB (line and/or load)	1	150-F84L
	600V Protective Module	150-C3...37NC	1	150-C86
		150-C43...85NC (line and/or load)	1	150-C86P
		150-C108...480NC (line and/or load)	1	150-F86L

Table 13 - IEC Line- or Load-side Terminal Covers

	Description[1] [2]	Current Range [A]	Pkg. Qty.	Cat. No.
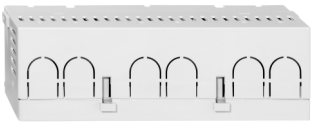	• Dead front protection • IP2X finger safe when used with 250 MCM cable	108...135	1	150-TC1
		201...251	1	150-TC2
	• Dead front protection • IP2X finger safe when used with 500 MCM cable	317...480	1	150-TC3

(1) 3...85 A units have terminal covers as standard. No additional terminal guards are required.
(2) SMC-3 controllers that are rated from 108...480 A are shipped with one terminal cover as standard.

Table 14 - Terminal Lug Kits

	Connection Type	Current Range [A](1)	Wire Size Range	Total No. of Terminal Lugs Possible Each Side		Pkg. Qty.	Cat. No.
				Line Side	Load Side		
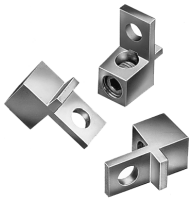	Line	108...135(2)	#6...250 MCM AWG 16 mm²...120 mm²	3	3	3	199-LF1
		201...251(2)		6	6	3	
		317...480(2)	#4...500 MCM AWG 25 mm²...240 mm²	6	6	3	199-LG1
	Delta	108...135	#4...500 MCM AWG 25 mm²...240 mm²	1	6(3)		1494R-N15
		201...251	1/0...250 MCM AWG 50 mm²...120 mm²	2	12(3)		1494R-N14
		317...480	3/0...500 MCM AWG 95 mm²...240 mm²	1	12(4)		150-LGSMC

(1) 3...85 A units have box lugs standard. No additional lugs are required.
(2) When a multi-conductor lug is required, refer to the installation instructions for appropriate lug catalog number.
(3) When connected in an inside-the-delta configuration, use Cat. No. 199-LF1 for load-side connections (T1...T6).
(4) When connected in an inside-the-delta configuration, use Cat. No. 199-LG1 for load-side connections (T1...T6).

Table 15 - Marking Tags and Covers

Description		For Use With	Pkg. Qty.	Cat. No.
	Marking Tag Sheet • 160 perforated paper labels each, 6 x 17 mm, to be used with a transparent cover	150-C, 150-D	10	100-FMP
	Transparent Cover • To be used with marking tag sheets		100	100-FMC

Table 16 - Remote Reset Solenoid

Description		For Use With	Pkg. Qty.	Cat. No.
	Remote Reset Solenoid • for remote reset of electronic overload	193-T all, 150-C	1	193-ER1⊗

⊗ Voltage Suffix Codes

Voltage	24	48	110	115	120	220	240
50 Hz	J	–	D	–	–	A	–
60 Hz	J	–	–	–	D	–	A
DC	Z24	Z48	–	Z01	–	–	–

Available Coil Voltages: 12...600V 50 Hz/12...600V 60 Hz
Surcharge for special voltages up to 20 pieces (no surcharge for quantities greater than 20 pieces.)

Specifications

Table 17 - Standard Features

Attribute	Description
Selectable Start Times	2, 5, 10, 15, 20, 25, or 30 s
Selectable Initial Torque	15%, 25%, 35%, and 65% of locked rotor torque
Selectable Current Limit	150%, 250%, 350%, and 450% of full load current
Selectable Kick Start — 450% FLA	0, 0.5, 1.0, or 1.5 s
Selectable Soft Stop	Off, 100%, 200%, or 300% of the start time setting when wired
Selectable Overload Trip Class	Trip Class 10, 15, or 20

Table 18 - Power Circuit Ratings

Attribute		UL/CSA/NEMA	IEC
Rated Operation Voltage		200...480V AC (-15%, +10%) 200...600V AC(-15%, +10%)	200...480V AC — 400V AC 500V AC — 500V AC
Rated Insulation Voltage		600V AC	500V AC
Dielectric Withstand		2200V AC	2500V AC
Repetitive Peak		200...480V AC: 1400V 200...600V AC: 1600V	200...480V AC: 1400V 500V AC: 1600V
Operating Frequency		50/60 Hz	50/60 Hz
Utilization Category	1...37 A	—	AC-53b: 3.5-15:3585
	43...60 A	—	AC-53b: 4.5-30:1770
	85 A	—	AC-53b: 4.5-30:3570
	108 A	—	AC-53b: 4.5-30:1770
	135 A	—	AC-53b: 3.5-30: 1770
	201...251 A	—	AC-53b: 3.5-30: 1770
	317...480 A	—	AC-53b: 3.5-30: 1770
Number of Poles		Equipment is designed for 3-phase only	
Rated Impulse Voltage		6 kV	
DV/DT Protection		1000V/µs	
Overvoltage Category		III	

Table 19 - Standards Compliance and Certifications

Standards Compliance
UL 508
CSA C22.2 No.14
EN/IEC 60947-1
EN/IEC 60947-4-2

Certifications
cULus Listed (Open Type) (File No. E96956, Guides NMFT, NMFT7)
CSA Certified (File No. LR 1234)
CE Marked (Open Type) per EMC and Low Voltage Directive
CCC Certified

Table 20 - Short-circuit Protection Ratings

Attribute		Description			
SCPD Performance		Type 1[1]			
		Non-Time Delay		Thermal Magnetic Circuit Breaker	
SCPD List[2]		Max. Standard Available Fault	Max. Standard Fuse [A][3]	Max. Standard Available Fault	Max. Circuit Breaker [A]
Line Device Operational Current Rating [A]	3	5 kA	12	5 kA	15
	9	5 kA	30	5 kA	30
	16	5 kA	60	5 kA	60
	19	5 kA	70	5 kA	70
	25	5 kA	100	5 kA	100
	30	10 kA	110	10 kA	110
	37	10 kA	125	10 kA	125
	43	10 kA	150	10 kA	150
	60	10 kA	225	10 kA	225
	85	10 kA	300	10 kA	300
	108	10 kA	400	10 kA	300
	135	10 kA	500	10 kA	400
	201	18 kA	600	18 kA	600
	251	18 kA	700	18 kA	700
	317	30 kA	800	30 kA	800
	361	30 kA	1000	30 kA	1000
	480	42 kA	1200	42 kA	1200
Delta Device Operational Current Rating [A]	5.1	5 kA	15	5 kA	15
	16	5 kA	60	5 kA	60
	27.6	5 kA	70	5 kA	70
	32.8	5 kA	125	5 kA	125
	43	5 kA	150	5 kA	150
	52	10 kA	200	10 kA	200
	64	10 kA	250	10 kA	250
	74	10 kA	250	10 kA	250
	104	10 kA	400	10 kA	300
	147	10 kA	400	10 kA	400
	187	10 kA	600	10 kA	500
	234	10 kA	700	10 kA	700
	348	18 kA	1000	18 kA	1000
	435	18 kA	1200	18 kA	1200
	549	30 kA	1600	30 kA	1600
	625	30 kA	1600	30 kA	1600
	831	42 kA	1600	30 kA	1600
	831	42 kA	1600	42 kA	1200

(1) Type 1 performance/protection indicates that, under a short-circuit condition, the fused or circuit breaker-protected starter shall cause no danger to persons or installation but may not be suitable for further service without repair or replacement.
(2) Consult local codes for proper sizing of short-circuit protection.
(3) Non-time delay fuses (K5).

Table 21 - Short-circuit Protection Performance, High Fault, Type 1

SCPD Performance[1]			Type 1 Ratings[2]				
Motor Connection Type	Cat. No.	Current Rating [A]	Class J or Class L Fuse[3]		Inverse Time (Thermal Magnetic) Circuit Breaker 480V, 65 kA Max.		
			Max. High Capacity Available Fault (600V) [kA]	Max. Current [A]	Max. Current [A]	Cat. No.	Rating Plug Cat. No.
Line Connection	150-C3N...	3	65	6	15	140G-G6C3-C15	–
	150-C9N...	9		15	30	140G-G6C3-C30	–
	150-C16N...	16		30	60	140G-G6C3-C60	–
	150-C19N...	19		40	70	140G-G6C3-C70	–
	150-C25N...	25	70	50	100	140G-J6F3-D10	–
	150-C30N...	30		60	110	140G-J6F3-D11	–
	150-C37N...	37		60	125	140G-J6F3-D12	–
	150-C43N...	43		90	150	140G-J6F3-D15	–
	150-C60N...	60		125	225	140G-J6F3-D22	–
	150-C85N...	85		175	250	140G-J6F3-D25	–
	150-C108N...	108		200	300	140G-K6F3-D30	–
	150-C135N...	135		250	400	140G-K6F3-D40	–
	150-C201N...	201		350	600	140G-M6F3-D60	–
	150-C251N...	251		400	700	140G-M6F3-D80	–
	150-C317N...	317	69	500	800	140G-N6H3-E12	140G-NRP-D80
	150-C361N...	361		600	1000	140G-N6H3-E12	140G-NRP-E10
	150-C480N...	480		800	1200	140G-N6H3-E12	–
Inside-the-Delta Connection	150-C3N...	3	69	10	20	140G-G6C3-C20	–
	150-C9N...	9		30	60	140G-G6C3-C60	–
	150-C16N...	16		60	100	140G-G6C3-D10	–
	150-C19N...	19		70	125	140G-G6C3-D12	–
	150-C25N...	25	70	90	150	140G-J6F3-D15	–
	150-C30N...	30		100	200	140G-J6F3-D20	–
	150-C37N...	37		100	250	140G-J6F3-D25	–
	150-C43N...	43		150	250	140G-J6F3-D25	–
	150-C60N...	60		225	250	140G-J6F3-D25	–
	150-C85N...	85		300	250	140G-J6F3-D25	–
	150-C108N...	108		400	400	140G-K6F3-D40	–
	150-C135N...	135		400	400	140G-K6F3-D40	–
	150-C201N...	201		600	800	140G-M6F3-D80	–
	150-C251N...	251		800	800	140G-M6F3-D80	–
	150-C317N...	317	69	1000	1200	140G-N6H3-E12	–
	150-C361N...	361		1200	1200	140G-N6H3-E12	–
	150-C480N...	480		1600	1200	140G-N6H3-E12	–

(1) Consult local codes for proper sizing of short-circuit protection.
(2) Basic Requirements for Type 1 Coordination: Under the short-circuit condition, the starter shall cause no danger to persons or to the installation. The starter may not be suitable for further service without repair or replacement of parts. For further details, refer to UL 508/CSA C22.2 No. 14 and EN 60947-4-2.
(3) High Capacity fault ratings when used with time delay Class J or time delay Class L fuse.

Electrical Ratings

Table 22 - Control Circuits

	UL/CSA/NEMA	IEC
Rated Operational Voltage (+10%, –15%)	100...240V AC, 24V AC/DC	100...240V AC, 24V AC/DC
Rated Insulation Voltage	250V	250V AC
Rated Impulse Voltage	2.5 kV	4 kV
Dielectric Withstand	1500V AC	2000V AC
Overvoltage Category	II	III[1]
Operating Frequency	50/60 Hz	50/60 Hz
Input on-state voltage minimum, during start (IN1, IN2)	85V AC, 19.2V DC / 19.2V AC	
Input on-state current (IN1, IN2)	9.8 mA @120V AC/19.6 mA @ 240V AC, 7.3 mA @ 24V AC/DC	
Input off-state voltage maximum (IN1, IN2)	40V AC, 17V DC / 12V AC	
Input off-state current @ input off-state voltage (IN1, IN2)	<10 mA, <12 mA	

(1) Overvoltage category II, when either control or auxiliary circuit is wired to a SELV or PELV circuit.

Table 23 - Control Power During Start

		UL/CSA/NEMA	IEC
With Fan	3...37 A	215 mA @ 120V AC / 180 mA @ 240V AC, 800 mA @ 24V DC / 660 mA @ 24V AC	
	43...85 A	200 mA @ 120V AC / 100 mA @ 240V AC, 700 mA @ 24V AC/DC	
		Fan Power	Control Power
	108...135 A	20VA	200 mA @ 120V AC / 120 mA @ 240V AC, 600 mA @ 24V AC/DC
	201...251 A	40VA	
	317...480 A	60VA	
Without Fan	3...37 A	205 mA @ 120V AC / 145 mA @ 240V AC, 705 mA @ 24V DC / 580 mA @ 24V AC	

Table 24 - Steady-state Heat Dissipation and Overload Current Range

Controller Rating [A]	Steady State Heat Dissipation [W]	Overload Current Range [A]
3	11	1...3
9	12	3...9
16	14	5.3...16
19	15	6.3...19
25	17	8.3...25
30	19	10...30
37	24	12.3...37
43	34	14.3...43
60	50	20...60
85	82	28.3...85
108	62	27...108
135	75	34...135
201	129	67...201
251	147	84...251
317	174	106...317
361	194	120...361
480	239	160...480

Table 25 - Environmental Ratings

Attribute		Rating
Operating Temperature Range	open	-5…+50 °C (23…122 °F)
	enclosed	-5…+40 °C (23…104 °F)
Storage and Transportation Temperature Range		-25…+85 °C (-13…+185 °F)
Altitude		2000 m (6560 ft)
Humidity		5…95% (noncondensing)
Pollution Degree		2
Type of Protection		IP2X

Table 26 - Mechanical Ratings

Attribute			Rating
Resistance to Vibration	Operational		1.0 G Peak, 0.15 mm (0.006 in.) displacement
	Non-Operational		2.5 G Peak, 0.38 mm (0.015 in.) displacement
Resistance to Shock	Operational		15 G
	Non-Operational		30 G
Line Power Terminals	Cable Size Tightening Torque	3…37 A	2.5…25 mm^2 (14…4 AWG); 2.3…3.4 N•m (30 lb•in) if 1 25 mm^2 (4 AWG) wire in top terminal, 4.0 N•m (35 lb•in.)
		43…85 A	2.5…95 mm^2 (14…3/0 AWG) 11.3…12.4 N•m (100…110 lb•in)
	Power Pole Holes	108…135 A	One M10 x 1.5 diameter hole per power pole
		201…251 A	Two M10 x 1.5 diameter holes per power pole
		317…480 A	Two M12 x 1.75 diameter holes per power pole
Load Power Terminals	Cable Size Tightening Torque	3…37 A	2.5…16 mm^2 (14…6 AWG) 2.3…2.5 N•m (20…22.5 lb•in)
		43…85 A	2.5…50 mm^2 (14…1 AWG) 11.3…12.4 N•m (100…110 lb•in)
	Power Pole Holes	108…135 A	One M10 x 1.5 diameter hole per power pole
		201…251 A	Two M10 x 1.5 diameter holes per power pole
		317…480 A	Two M12 x 1.75 diameter holes per power pole
Control Terminals	Cable Size Tightening Torque	All	0.2…2.5 mm^2 (24…14 AWG) 0.45…0.9 N•m (4.0…8.0 lb•in)

Table 27 - Other Ratings

		UL/CSA/NEMA	IEC
EMC Emission Levels	Conducted Radio Frequency Emissions	–	Class A
	Radiated Emissions	–	Class A
EMC Immunity Levels	Electrostatic Discharge	4 kV Contact and 8 kV Air Discharge	8 kV Air Discharge
	Radio Frequency Electromagnetic Field	–	Per EN/IEC 60947-4-2
	Fast Transient	–	Per EN/IEC 60947-4-2
	Surge Transient	–	Per EN/IEC 60947-4-2

Table 28 - Auxiliary Contacts

		UL/CSA/NEMA	IEC
Rated Operational Voltage		250V AC/30V DC	250V AC/30V DC
Rated Insulation Voltage		250V	250V AC
Rated Impulse Voltage		2.5 kV	4 kV
Dielectric Withstand		1500V AC	2000V AC
Overvoltage Category		II	III[1]
Operating Frequency		50/60 Hz	50/60 Hz
Utilization Category		D300/D300	AC-15/DC
TB-97, -98 (OVLD/Fault)	Type of Control Circuit	Electromagnetic relay	
	Number of Contacts	1	
	Type of Contacts	Normally Open (N.O.)	
	Type of Current	AC/DC	
	Rated Operational Current (max.)	0.6 A @ 120V AC and 0.3 A @ 240V AC	
	Conventional Thermal Current I_{th}	1 A	
	Make/Break VA	432/72	
TB-13, -14 Aux 1 (Normal/Up-to-Speed)	Type of Control Circuit	Electromagnetic relay	
	Number of Contacts	1	
	Type of Contacts	Normally Open (N.O.)	
	Type of Current	AC/DC	
	Rated Operational Current (max.)	0.6 A @ 120V AC and 0.3 A @ 240V AC	
	Conventional Thermal Current I_{th}	1 A	
	Make/Break VA	432/72	

(1) Overvoltage category II, when either control or auxiliary circuit is wired to a SELV or PELV circuit.

Table 29 - Side-mount Auxiliary Contacts

		UL/CSA/NEMA	IEC
Rated Operational Voltage		250V AC/30V DC	250V AC/30V DC
Rated Insulation Voltage		250V	250V AC
Rated Impulse Voltage		2.5 kV	4 kV
Dielectric Withstand		1500V AC	2000V AC
Overvoltage Category		II	III[1]
Operating Frequency		50/60 Hz	50/60 Hz
TB-23, -24 (Normal/Up-to-Speed) TB-33, -34 (Normal/Up-to-Speed)	Utilization Category	C300/R150	AC-15/DC-13
	Type of Control Circuit	Electromagnetic relay	
	Number of Contacts	1	
	Type of Contacts	Normally Open (N.O.)	
	Type of Current	AC/DC	
	Rated Operational Current (max.)	1.5 A @ 120V AC, 0.75 A @ 240V AC, 1.17 A @ 24V DC	
	Conventional Thermal Current I_{th}	2.5 A	
	Make/Break VA	1800/180V AC, 28V DC (resistive)	
TB-11, -12 (Normal/Up-to-Speed)	Type of Control Circuit	B300/R300	AC-15/DC-13
	Type of Control Circuit	Electromagnetic relay	
	Number of Contacts	1	
	Type of Contacts	Normally Closed (N.C.)	
	Type of Current	AC/DC	
	Rated Operational Current (max.)	3 A @ 120V AC, 1.5 A @ 240V AC, 1.17 A @ 24V DC	
	Conventional Thermal Current I_{th}	5 A	
	Make/Break VA	3600/360VA, 28VA (DC resistive)	

(1) Overvoltage category II, when either control or auxiliary circuit is wired to a SELV or PELV circuit.

Typical Wiring Diagrams

Figure 1 - Two-wire Configuration

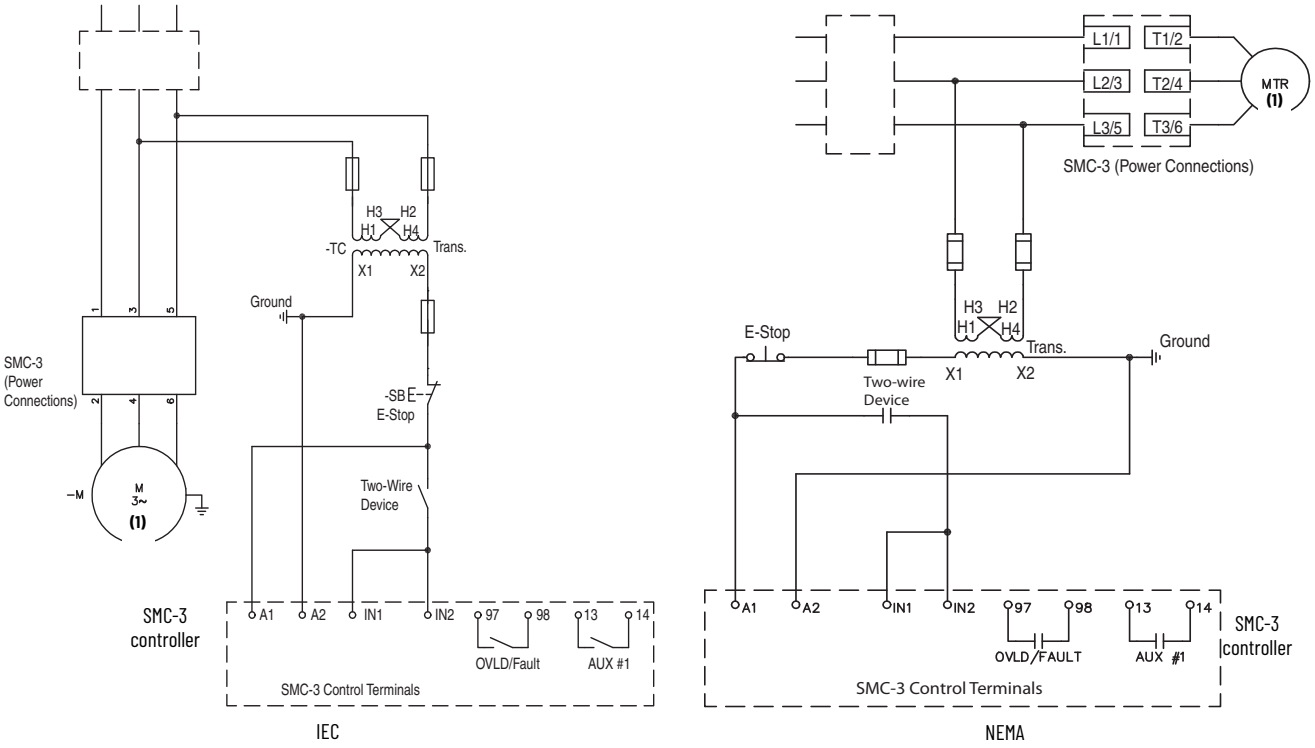

Note	Information
1	Customer supplied

Figure 2 - Three-wire Configuration

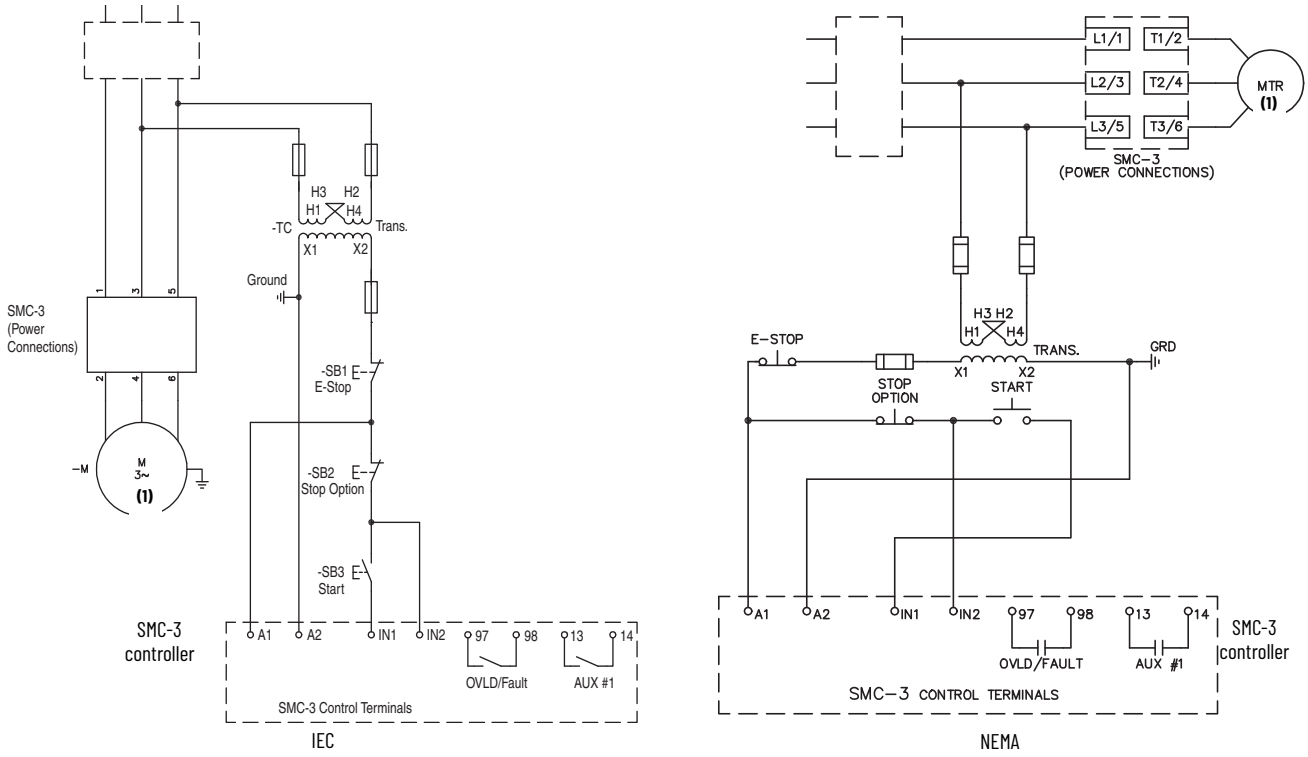

Note	Information
1	Customer supplied

Figure 3 - Isolation Contactor Configuration

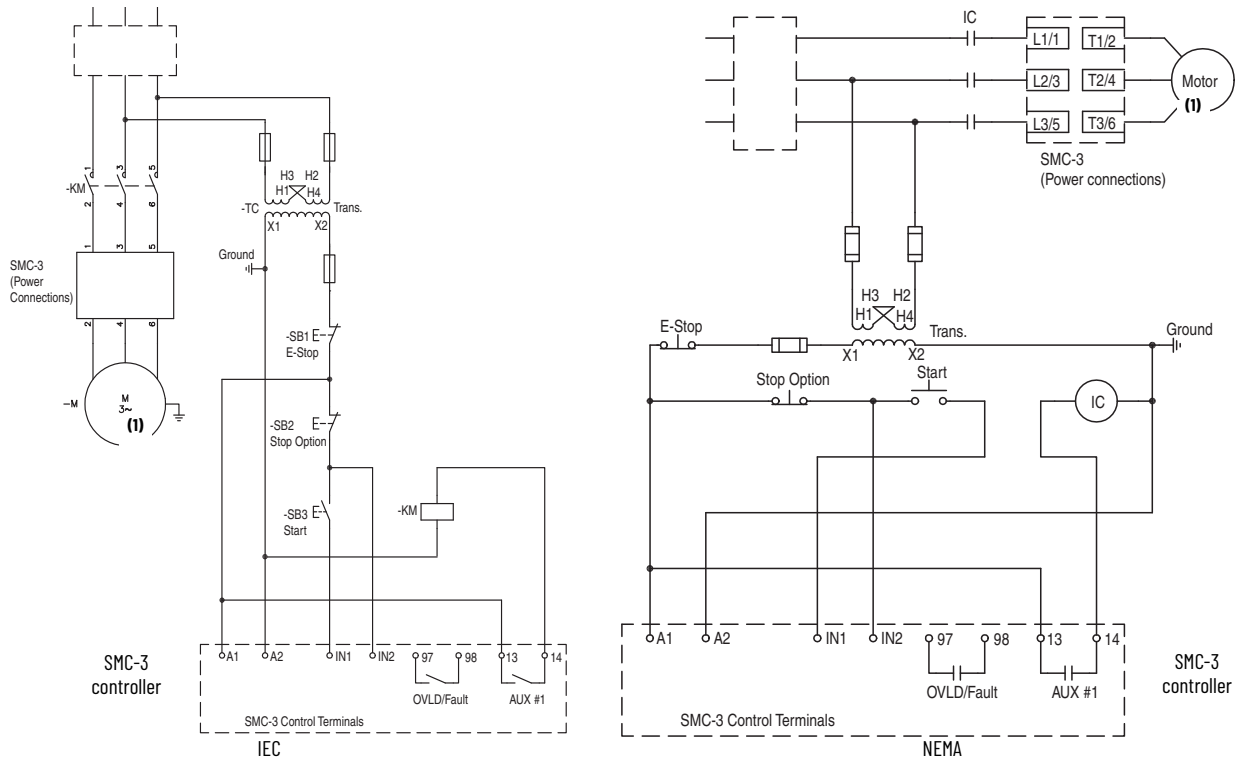

Note	Information
1	Customer supplied

Figure 4 - Reversing Configuration

Minimum off time = 1 second

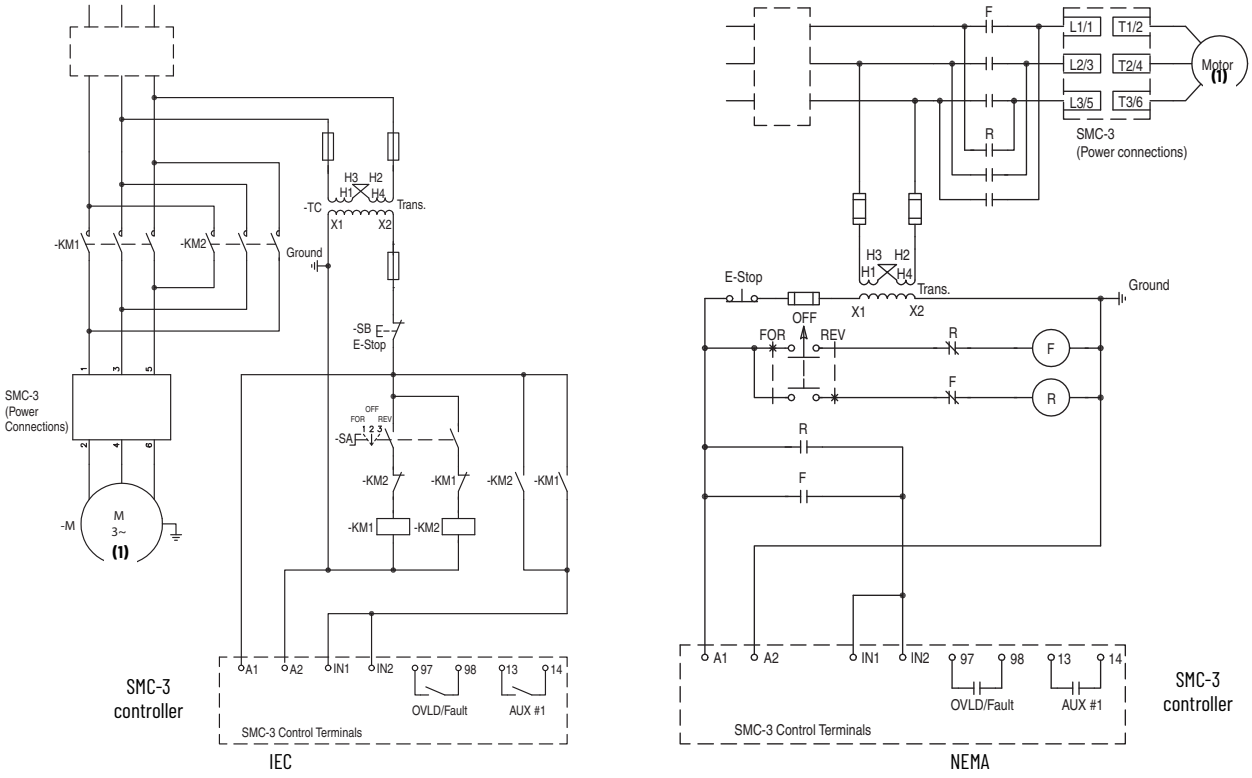

Note	Information
1	Customer supplied

Overload Trip Curves

Figure 5 - SMC-3 Overload Trip curves—Trip Class 10, 15, and 20

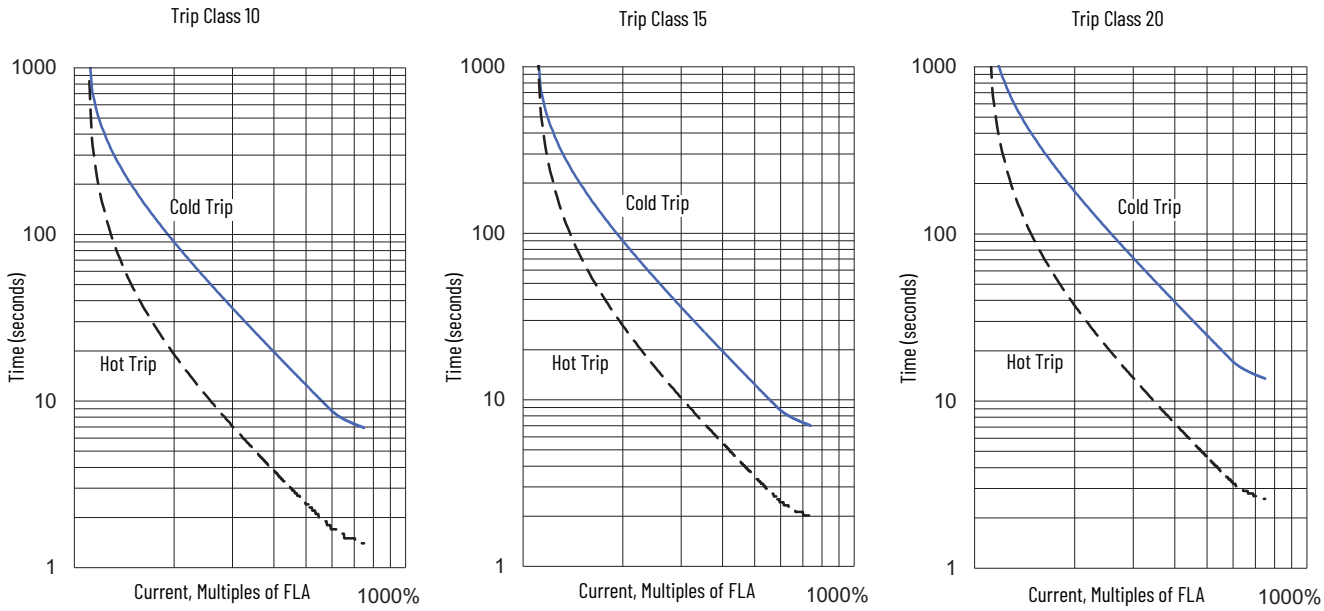

Starts per Hour Curves

Figure 6 - SMC-3 Starts per hour (3...37 A) 40 °C, 100% Duty Cycle, 10 s, 350%

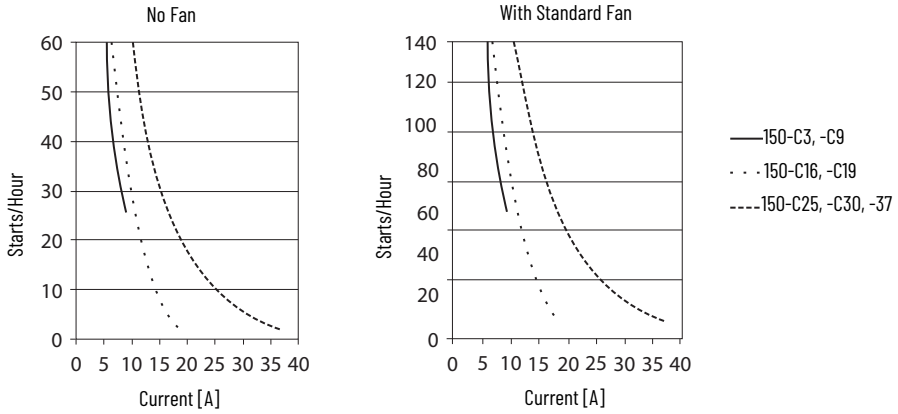

Figure 7 - SMC-3 Starts per hour (43...85 A) 40 °C, 100% Duty Cycle, 20 s, 350%

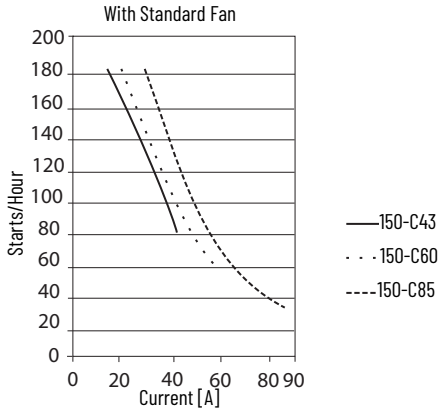

Figure 8 - SMC-3 Starts per hour (108...135 A) 40 °C, 100% Duty Cycle, 20 s, 350%

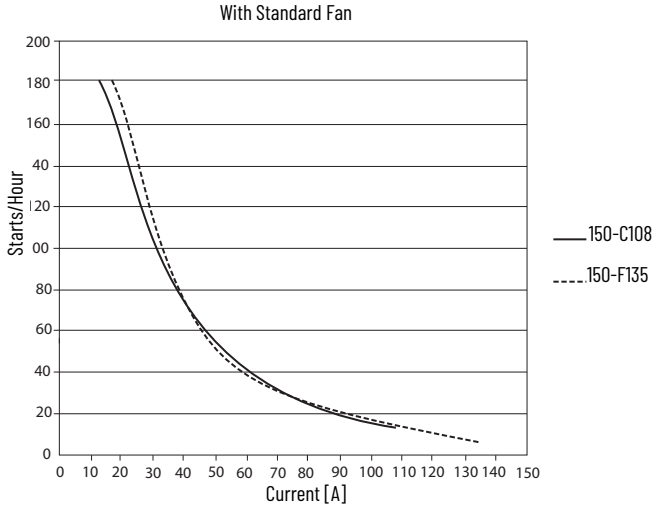

Figure 9 - SMC-3 Starts per hour (201...480 A) 40 °C, 100% Duty Cycle, 20 s, 350%

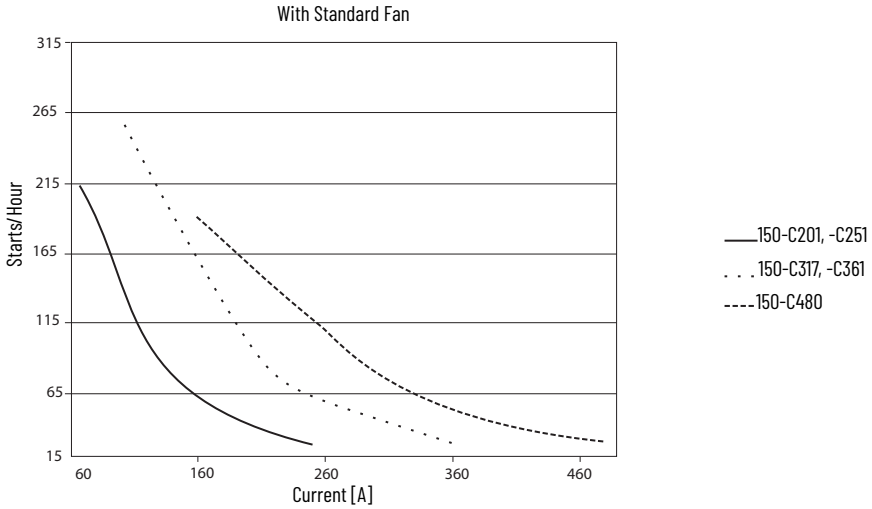

Approximate Dimensions

Dimensions in millimeters (inches). Dimensions are not intended to be used for manufacturing purposes. All dimensions are subject to change.

Figure 10 - Open Type Controllers

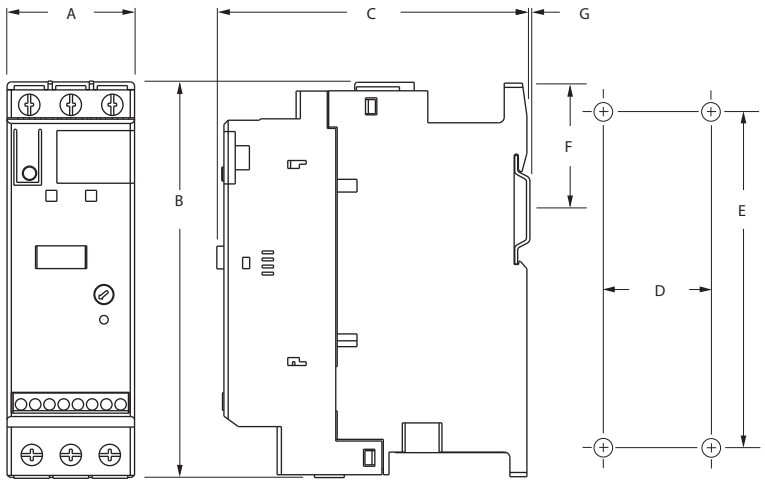

Controller Rating [A]	A	B	C	D	E	F	G	Mounting Hole Size	Weight kg (lbs)
1...37[1]	44.8 (1-49/64)	139.7 (5-1/2)	110 (4-21/64)	35 (1-3/8)	132 (5-13/64)	46.4 (1.81)	2 (1/16)	4.6 (0.18)	0.86 (1.9)
43...85[2]	72 (2.83)	206 (8.11)	130 (5.12)	55 (2.17)	198 (7.8)	102 (4.02)	2 (1/16)	5.3 (0.21)	2.25 (5.0)
108...135[2]	196.4 (7.74)	443.7 (17.47)	205.2 (8.08)	166.6 (6.56)	367 (14.45)	–	–	7.5 (0.295)	15 (33)
201...251[2]	225 (8.86)	560 (22.05)	265.3 (10.45)	150 (5.91)	504.1 (19.85)	–	–	11.5 (0.45)	30.4 (67)
317...480[2]	290 (11.42)	600 (23.62)	298 (11.73)	200 (7.87)	539.2 (21.23)	–	–	11.5 (0.45)	45.8 (101)

(1) Optional fan does not increase dimension B.
(2) Fan is standard.

Figure 11 - Minimum Enclosure Size

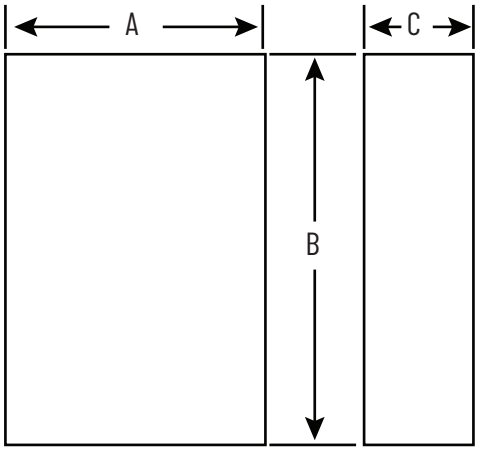

Controller Rating [A]	B Height	A Width	C Depth	Fan Requirements
1...37	305 (12)	224 (9)	152 (6)	none
43...85	406 (16)	305 (12)	203 (8)	none
108...135	762 (30)	610 (24)	305 (12)	none
201...251	965 (38)	762 (30)	356 (14)	none
317...480	1295 (51)	914 (36)	356 (14)	none

The SMC Flex controller is modular so that it can help simplify installation and commissioning. A built-in LCD display, keypad, and flexible communications provide optimized configuration, advanced performance, diagnostics, and protection. Three-phase control, electronic overload, and integrated bypass along with removable control module, power modules, and fan assembly are combined in a cost-effective package for your demanding applications.

Modes of operation include the following:

- Soft Start
- Current Limit Start
- Selectable Kickstart
- Coast-to-rest
- Soft Stop
- Full Voltage Start
- Dual Ramp Start
- Pump Start
- Preset Slow Speed
- Pump Stop
- Smart Motor Braking
- Accu-Stop
- Slow Speed with Braking
- Linear Speed Acceleration (Tachometer required)

Catalog Number Explanation

Examples that are given in this section are not intended to be used for product selection. Use ProposalWorks software to configure the SMC Flex controller. ProposalWorks software is available from rok.auto/systemtools.

150	-	F135	N	B	D	B
a		b	c	d	e	f

a	
Bulletin Number	
Code	**Description**
150	Solid-state Controller

b	
Controller Rating	
Code	**Description**
F5	5 A, 3 Hp @ 460V AC
F25	25 A, 15 Hp @ 460V AC
F43	43 A, 30 Hp @ 460V AC
F60	60 A, 40 Hp @ 460V AC
F85	85 A, 60 Hp @ 460V AC
F108	108 A, 75 Hp @ 460V AC
F135	135 A, 100 Hp @ 460V AC
F201	201 A, 150 Hp @ 460V AC
F251	251 A, 200 Hp @ 460V AC
F317	317 A, 250 Hp @ 460V AC
F361	361 A, 300 Hp @ 460V AC
F480	480 A, 400 Hp @ 460V AC
F625	625 A, 500 Hp @ 460V AC
F780	780 A, 600 Hp @ 460V AC
F970	970 A, 800 Hp @ 460V AC
F1250	1250 A, 1000 Hp @ 460V AC

c	
Enclosure Type	
Code	**Description**
N	Open

d	
Input Line Voltage	
Code	**Description**
B	200...460V AC, 3-Phase, 50 and 60 Hz
C	200...575V AC, 3-Phase, 50 and 60 Hz
Z	230...690V AC, 3-Phase, 50 and 60 Hz (Open only, 108 A and above) (690V AC line connected only)

e	
Control Voltage	
Code	**Description**
D	100...240V AC (5...480 A units)
R	24V AC/DC (5...480 A units)
E	110/120V AC (625...1250 A units)
A	230/240V AC (625...1250 A units)

f	
Options - Select only one	
Code	**Description**
Blank	Standard
B	Pump Control
D	Braking Control

Product Selection

For use with Line-connected Motors

Use the SMC Estimation Wizard and SMC Thermal Estimation Wizard to confirm that the SMC controller selection meets the application requirements. See Sizing and Selection Tools for more information. For additional assistance, visit rok.auto or contact Industrial Controls Technical Support by email at raictechsupport@ra.rockwell.com or by phone at +1 440-646-5800.

Table 30 - 200/208V AC SMC Flex Controllers for Use with Line-connected Motors

Rated Voltage [V AC]	Motor Current [A](1)	Max. kW, 50 Hz	Max. Hp, 60 Hz	Control Power(2)	Open Type Cat. No.(3)
200/208	1...5	–	1	100...240V AC, 50/60 Hz	150-F5NBD
				24V AC/DC	150-F5NBR
	5...25	–	5	100...240V AC, 50/60 Hz	150-F25NBD
				24V AC/DC	150-F25NBR
	8.6...43	–	10	100...240V AC, 50/60 Hz	150-F43NBD
				24V AC/DC	150-F43NBR
	12...60	–	15	100...240V AC, 50/60 Hz	150-F60NBD
				24V AC/DC	150-F60NBR
	17...85	–	25	100...240V AC, 50/60 Hz	150-F85NBD
				24V AC/DC	150-F85NBR
	27...108	–	30	100...240V AC, 50/60 Hz	150-F108NBD
				24V AC/DC	150-F108NBR
	34...135	–	40	100...240V AC, 50/60 Hz	150-F135NBD
				24V AC/DC	150-F135NBR
	67...201	–	60	100...240V AC, 50/60 Hz	150-F201NBD
				24V AC/DC	150-F201NBR
	84...251	–	75	100...240V AC, 50/60 Hz	150-F251NBD
				24V AC/DC	150-F251NBR
	106...317	–	100	100...240V AC, 50/60 Hz	150-F317NBD
				24V AC/DC	150-F317NBR
	120...361	–	125	100...240V AC, 50/60 Hz	150-F361NBD
				24V AC/DC	150-F361NBR
	160...480	–	150	100...240V AC, 50/60 Hz	150-F480NBD
				24V AC/DC	150-F480NBR
	208...625	–	200	110/120V AC, 50/60 Hz	150-F625NBE
				230/240V AC, 50/60 Hz	150-F625NBA
	260...780	–	250	110/120V AC, 50/60 Hz	150-F780NBE
				230/240V AC, 50/60 Hz	150-F780NBA
	323...970	–	350	110/120V AC, 50/60 Hz	150-F970NBE
				230/240V AC, 50/60 Hz	150-F970NBA
	416...1250	–	400	110/120V AC, 50/60 Hz	150-F1250NBE
				230/240V AC, 50/60 Hz	150-F1250NBA

(1) Motor FLA rating must fall within specified current range for unit to operate properly. Special consideration should be given when using a motor with a potentially high starting current (greater than ten times motor FLA) with the SMC Flex controller in the Full Voltage starting mode. Contact Rockwell Automation technical support for further guidance.
(2) For controllers with 24V AC/DC control power, separate 120V or 240V single-phase power supply is required for fan operation.
(3) Devices rated 108 A and greater are not equipped with line and load terminal lugs. See page 41 for terminal lug kits.

Table 31 - 230V AC SMC Flex Controllers for Use with Line-connected Motors

Rated Voltage [V AC]	Motor Current [A](1)	Max. kW, 50 Hz	Max. Hp, 60 Hz	Control Power(2)	Open Type Cat. No.(3)
230	1...5	1.1	1	100...240V AC, 50/60 Hz	150-F5NBD
				24V AC/DC	150-F5NBR
	5...25	5.5	7.5	100...240V AC, 50/60 Hz	150-F25NBD
				24V AC/DC	150-F25NBR
	8.6...43	11	15	100...240V AC, 50/60 Hz	150-F43NBD
				24V AC/DC	150-F43NBR
	12...60	15	20	100...240V AC, 50/60 Hz	150-F60NBD
				24V AC/DC	150-F60NBR
	17...85	22	30	100...240V AC, 50/60 Hz	150-F85NBD
				24V AC/DC	150-F85NBR
	27...108	30	40	100...240V AC, 50/60 Hz	150-F108NBD
				24V AC/DC	150-F108NBR
	34...135	37	50	100...240V AC, 50/60 Hz	150-F135NBD
				24V AC/DC	150-F135NBR
	67...201	55	75	100...240V AC, 50/60 Hz	150-F201NBD
				24V AC/DC	150-F201NBR
	84...251	75	100	100...240V AC, 50/60 Hz	150-F251NBD
				24V AC/DC	150-F251NBR
	106...317	90	125	100...240V AC, 50/60 Hz	150-F317NBD
				24V AC/DC	150-F317NBR
	120...361	110	150	100...240V AC, 50/60 Hz	150-F361NBD
				24V AC/DC	150-F361NBR
	160...480	132	200	100...240V AC, 50/60 Hz	150-F480NBD
				24V AC/DC	150-F480NBR
	208...625	200	250	110/120V AC, 50/60 Hz	150-F625NBE
				230/240V AC, 50/60 Hz	150-F625NBA
	260...780	250	300	110/120V AC, 50/60 Hz	150-F780NBE
				230/240V AC, 50/60 Hz	150-F780NBA
	323...970	315	400	110/120V AC, 50/60 Hz	150-F970NBE
				230/240V AC, 50/60 Hz	150-F970NBA
	416...1250	400	500	110/120V AC, 50/60 Hz	150-F1250NBE
				230/240V AC, 50/60 Hz	150-F1250NBA

(1) Motor FLA rating must fall within specified current range for unit to operate properly. Special consideration should be given when using a motor with a potentially high starting current (greater than ten times motor FLA) with the SMC Flex controller. Contact Rockwell Automation technical support for further guidance.
(2) For controllers with 24V AC/DC control power, separate 120V or 240V single-phase power supply is required for fan operation.
(3) Devices rated 108 A and greater are not equipped with line and load terminal lugs. See page 41 for terminal lug kits.

Table 32 - 400/415/460V AC SMC Flex Controllers for Use with Line-connected Motors

Rated Voltage [V AC]	Motor Current [A](1)	Max. kW, 50 Hz	Max. Hp, 60 Hz	Control Power(2)	Open Type Cat. No.(3)
400/415 (kW) 460 (Hp)	1...5	2.2	3	100...240V AC, 50/60 Hz	150-F5NBD
				24V AC/DC	150-F5NBR
	5...25	11	15	100...240V AC, 50/60 Hz	150-F25NBD
				24V AC/DC	150-F25NBR
	8.6...43	22	30	100...240V AC, 50/60 Hz	150-F43NBD
				24V AC/DC	150-F43NBR
	12...60	30	40	100...240V AC, 50/60 Hz	150-F60NBD
				24V AC/DC	150-F60NBR
	17...85	45	60	100...240V AC, 50/60 Hz	150-F85NBD
				24V AC/DC	150-F85NBR
	27...108	55	75	100...240V AC, 50/60 Hz	150-F108NBD
				24V AC/DC	150-F108NBR
	34...135	75	100	100...240V AC, 50/60 Hz	150-F135NBD
				24V AC/DC	150-F135NBR
	67...201	110	150	100...240V AC, 50/60 Hz	150-F201NBD
				24V AC/DC	150-F201NBR
	84...251	132	200	100...240V AC, 50/60 Hz	150-F251NBD
				24V AC/DC	150-F251NBR
	106...317	160	250	100...240V AC, 50/60 Hz	150-F317NBD
				24V AC/DC	150-F317NBR
	120...361	200	300	100...240V AC, 50/60 Hz	150-F361NBD
				24V AC/DC	150-F361NBR
	160...480	250	400	100...240V AC, 50/60 Hz	150-F480NBD
				24V AC/DC	150-F480NBR
	208...625	355	500	110/120V AC, 50/60 Hz	150-F625NBE
				230/240V AC, 50/60 Hz	150-F625NBA
	260...780	450	600	110/120V AC, 50/60 Hz	150-F780NBE
				230/240V AC, 50/60 Hz	150-F780NBA
	323...970	560	800	110/120V AC, 50/60 Hz	150-F970NBE
				230/240V AC, 50/60 Hz	150-F970NBA
	416...1250	710	1000	110/120V AC, 50/60 Hz	150-F1250NBE
				230/240V AC, 50/60 Hz	150-F1250NBA

(1) Motor FLA rating must fall within specified current range for unit to operate properly. Special consideration should be given when using a motor with a potentially high starting current (greater than ten times motor FLA) with the SMC Flex controller. Contact Rockwell Automation technical support for further guidance.
(2) For controllers with 24V AC/DC control power, separate 120V or 240V single-phase power supply is required for fan operation.
(3) Devices rated 108 A and greater are not equipped with line and load terminal lugs. See page 41 for terminal lug kits.

Table 33 - 500/575V AC SMC Flex Controllers for Use with Line-connected Motors

Rated Voltage [V AC]	Motor Current [A](1)	Max. kW, 50 Hz	Max. Hp, 60 Hz	Control Power(2)	Open Type Cat. No.(3)
500 (kW) 575 (Hp)	1...5	2.2	3	100...240V AC, 50/60 Hz	150-F5NCD
				24V AC/DC	150-F5NCR
	5...25	15	20	100...240V AC, 50/60 Hz	150-F25NCD
				24V AC/DC	150-F25NCR
	8.6...43	22	40	100...240V AC, 50/60 Hz	150-F43NCD
				24V AC/DC	150-F43NCR
	12...60	37	50	100...240V AC, 50/60 Hz	150-F60NCD
				24V AC/DC	150-F60NCR
	17...85	55	75	100...240V AC, 50/60 Hz	150-F85NCD
				24V AC/DC	150-F85NCR
	27...108	75	100	100...240V AC, 50/60 Hz	150-F108NCD
				24V AC/DC	150-F108NCR
	34...135	90	125	100...240V AC, 50/60 Hz	150-F135NCD
				24V AC/DC	150-F135NCR
	67...201	132	200	100...240V AC, 50/60 Hz	150-F201NCD
				24V AC/DC	150-F201NCR
	84...251	160	250	100...240V AC, 50/60 Hz	150-F251NCD
				24V AC/DC	150-F251NCR
	106...317	200	300	100...240V AC, 50/60 Hz	150-F317NCD
				24V AC/DC	150-F317NCR
	120...361	250	350	100...240V AC, 50/60 Hz	150-F361NCD
				24V AC/DC	150-F361NCR
	160...480	315	500	100...240V AC, 50/60 Hz	150-F480NCD
				24V AC/DC	150-F480NCR
	208...625	450	600	110/120V AC, 50/60 Hz	150-F625NCE
				230/240V AC, 50/60 Hz	150-F625NCA
	260...780	560	800	110/120V AC, 50/60 Hz	150-F780NCE
				230/240V AC, 50/60 Hz	150-F780NCA
	323...970	710	1000	110/120V AC, 50/60 Hz	150-F970NCE
				230/240V AC, 50/60 Hz	150-F970NCA
	416...1250	900	1300	110/120V AC, 50/60 Hz	150-F1250NCE
				230/240V AC, 50/60 Hz	150-F1250NCA

(1) Motor FLA rating must fall within specified current range for unit to operate properly. Special consideration should be given when using a motor with a potentially high starting current (greater than ten times motor FLA) with the SMC Flex controller. Contact Rockwell Automation technical support for further guidance.
(2) For controllers with 24V AC/DC control power, separate 120V or 240V single-phase power supply is required for fan operation.
(3) Devices rated 108 A and greater are not equipped with line and load terminal lugs. See page 41 for terminal lug kits.

Table 34 - 690V AC SMC Flex Controllers for Use with Line-connected Motors

Rated Voltage [V AC]	Motor Current [A](1)	Max. kW, 50 Hz	Max. Hp, 60 Hz	Control Power	Open Type Cat. No.(2)
690/Y (kW)(3) 600 (Hp)	27...108	90	100	100...240V AC, 50/60 Hz	150-F108NZD
	34...135	132	125	100...240V AC, 50/60 Hz	150-F135NZD
	67...201	160	200	100...240V AC, 50/60 Hz	150-F201NZD
	84...251	200	250	100...240V AC, 50/60 Hz	150-F251NZD
	106...317	315	400	100...240V AC, 50/60 Hz	150-F317NZD
	120...361	355	450	100...240V AC, 50/60 Hz	150-F361NZD
	160...480	450	600	100...240V AC, 50/60 Hz	150-F480NZD
	208...625	630	800	110/120V AC, 50/60 Hz	150-F625NZE
				230/240V AC, 50/60 Hz	150-F625NZA
	260...780	800	1000	110/120V AC, 50/60 Hz	150-F780NZE
				230/240V AC, 50/60 Hz	150-F780NZA
	323...970	1000	1300	110/120V AC, 50/60 Hz	150-F970NZE
				230/240V AC, 50/60 Hz	150-F970NZA
	416...1250	1200	1600	110/120V AC, 50/60 Hz	150-F1250NZE
				230/240V AC, 50/60 Hz	150-F1250NZA

(1) Motor FLA rating must fall within specified current range for unit to operate properly. Special consideration should be given when using a motor with a potentially high starting current (greater than ten times motor FLA) with the SMC Flex controller. Contact Rockwell Automation technical support for further guidance.
(2) Devices rated 108 A and greater are not equipped with line and load terminal lugs. See page 41 for terminal lug kits.
(3) To be used only in a Y-type system.

For Use with Delta-connected Motors

Use the SMC Estimation Wizard and SMC Thermal Estimation Wizard to confirm that the SMC controller selection meets the application requirements. See Sizing and Selection Tools for more information. For additional assistance, visit rok.auto or contact Industrial Controls Technical Support by email at raictechsupport@ra.rockwell.com or by phone at +1 440-646-5800.

Table 35 - 200/208V AC SMC Flex Controllers for Use with Delta-connected Motors

Rated Voltage [V AC]	Motor Current [A](1)	Max. kW, 50 Hz	Max. Hp, 60 Hz	Control Power(2)	Open Type Cat. No.(3)
200/208	1.7...8.7	–	2	100...240V AC, 50/60 Hz	150-F5NBD
				24V AC/DC	150-F5NBR
	8.7...43	–	10	100...240V AC, 50/60 Hz	150-F25NBD
				24V AC/DC	150-F25NBR
	14.9...74	–	20	100...240V AC, 50/60 Hz	150-F43NBD
				24V AC/DC	150-F43NBR
	20.8...104	–	30	100...240V AC, 50/60 Hz	150-F60NBD
				24V AC/DC	150-F60NBR
	29.4...147	–	40	100...240V AC, 50/60 Hz	150-F85NBD
				24V AC/DC	150-F85NBR
	47...187	–	60	100...240V AC, 50/60 Hz	150-F108NBD
				24V AC/DC	150-F108NBR
	59...234	–	75	100...240V AC, 50/60 Hz	150-F135NBD
				24V AC/DC	150-F135NBR
	116...348	–	100	100...240V AC, 50/60 Hz	150-F201NBD
				24V AC/DC	150-F201NBR
	145...435	–	150	100...240V AC, 50/60 Hz	150-F251NBD
				24V AC/DC	150-F251NBR
	183...549	–	200	100...240V AC, 50/60 Hz	150-F317NBD
				24V AC/DC	150-F317NBR
	208...625	–	200	100...240V AC, 50/60 Hz	150-F361NBD
				24V AC/DC	150-F361NBR
	277...831	–	300	100...240V AC, 50/60 Hz	150-F480NBD
				24V AC/DC	150-F480NBR
	283...850	–	300	110/120V AC, 50/60 Hz	150-F625NBE
				230/240V AC, 50/60 Hz	150-F625NBA
	300...900	–	300	110/120V AC, 50/60 Hz	150-F780NBE
				230/240V AC, 50/60 Hz	150-F780NBA
	400...1200	–	400	110/120V AC, 50/60 Hz	150-F970NBE
				230/240V AC, 50/60 Hz	150-F970NBA
	533...1600	–	500	110/120V AC, 50/60 Hz	150-F1250NBE
				230/240V AC, 50/60 Hz	150-F1250NBA

(1) Motor FLA rating must fall within specified current range for unit to operate properly. Special consideration should be given when using a motor with a potentially high starting current (greater than ten times motor FLA) with the SMC Flex controller. Contact Rockwell Automation technical support for further guidance.
(2) For controllers with 24V AC/DC control power, separate 120V or 240V single-phase power supply is required for fan operation.
(3) Devices rated 108 A and greater are not equipped with line and load terminal lugs. See page 41 for terminal lug kits.

Table 36 - 230V AC SMC Flex Controllers for Use with Delta-connected Motors

Rated Voltage [V AC]	Motor Current [A](1)	Max. kW, 50 Hz	Max. Hp, 60 Hz	Control Power(2)	Open Type Cat. No.(3)
230	1.7...8.7	2.2	2	100...240V AC, 50/60 Hz	150-F5NBD
				24V AC/DC	150-F5NBR
	8.7...43	11	15	100...240V AC, 50/60 Hz	150-F25NBD
				24V AC/DC	150-F25NBR
	14.9...74	22	25	100...240V AC, 50/60 Hz	150-F43NBD
				24V AC/DC	150-F43NBR
	20.8...104	30	40	100...240V AC, 50/60 Hz	150-F60NBD
				24V AC/DC	150-F60NBR
	29.4...147	45	50	100...240V AC, 50/60 Hz	150-F85NBD
				24V AC/DC	150-F85NBR
	47...187	55	60	100...240V AC, 50/60 Hz	150-F108NBD
				24V AC/DC	150-F108NBR
	59...234	75	75	100...240V AC, 50/60 Hz	150-F135NBD
				24V AC/DC	150-F135NBR
	116...348	110	125	100...240V AC, 50/60 Hz	150-F201NBD
				24V AC/DC	150-F201NBR
	145...435	132	150	100...240V AC, 50/60 Hz	150-F251NBD
				24V AC/DC	150-F251NBR
	183...549	160	200	100...240V AC, 50/60 Hz	150-F317NBD
				24V AC/DC	150-F317NBR
	208...625	200	250	100...240V AC, 50/60 Hz	150-F361NBD
				24V AC/DC	150-F361NBR
	277...831	250	350	100...240V AC, 50/60 Hz	150-F480NBD
				24V AC/DC	150-F480NBR
	283...850	250	350	110/120V AC, 50/60 Hz	150-F625NBE
				230/240V AC, 50/60 Hz	150-F625NBA
	300...900	250	350	110/120V AC, 50/60 Hz	150-F780NBE
				230/240V AC, 50/60 Hz	150-F780NBA
	400...1200	400	400	110/120V AC, 50/60 Hz	150-F970NBE
				230/240V AC, 50/60 Hz	150-F970NBA
	533...1600	500	600	110/120V AC, 50/60 Hz	150-F1250NBE
				230/240V AC, 50/60 Hz	150-F1250NBA

(1) Motor FLA rating must fall within specified current range for unit to operate properly. Special consideration should be given when using a motor with a potentially high starting current (greater than ten times motor FLA) with the SMC Flex controller. Contact Rockwell Automation technical support for further guidance.
(2) For controllers with 24V AC/DC control power, separate 120V or 240V single-phase power supply is required for fan operation.
(3) Devices rated 108 A and greater are not equipped with line and load terminal lugs. See page 41 for terminal lug kits.

Table 37 - 400/415/460V AC SMC Flex Controllers for Use with Delta-connected Motors

Rated Voltage [V AC]	Motor Current [A](1)	Max. kW, 50 Hz	Max. Hp, 60 Hz	Control Power(2)	Open Type Cat. No.(3)
400/415 (kW) 460 (Hp)	1.7...8.7	4	5	100...240V AC, 50/60 Hz	150-F5NBD
				24V AC/DC	150-F5NBR
	8.7...43	22	30	100...240V AC, 50/60 Hz	150-F25NBD
				24V AC/DC	150-F25NBR
	14.9...74	37	50	100...240V AC, 50/60 Hz	150-F43NBD
				24V AC/DC	150-F43NBR
	20.8...104	55	75	100...240V AC, 50/60 Hz	150-F60NBD
				24V AC/DC	150-F60NBR
	29.4...147	75	100	100...240V AC, 50/60 Hz	150-F85NBD
				24V AC/DC	150-F85NBR
	47...187	90	125	100...240V AC, 50/60 Hz	150-F108NBD
				24V AC/DC	150-F108NBR
	59...234	132	150	100...240V AC, 50/60 Hz	150-F135NBD
				24V AC/DC	150-F135NBR
	116...348	160	250	100...240V AC, 50/60 Hz	150-F201NBD
				24V AC/DC	150-F201NBR
	145...435	250	350	100...240V AC, 50/60 Hz	150-F251NBD
				24V AC/DC	150-F251NBR
	183...549	315	450	100...240V AC, 50/60 Hz	150-F317NBD
				24V AC/DC	150-F317NBR
	208...625	355	500	100...240V AC, 50/60 Hz	150-F361NBD
				24V AC/DC	150-F361NBR
	277...831	450	700	100...240V AC, 50/60 Hz	150-F480NBD
				24V AC/DC	150-F480NBR
	283...850	500	700	110/120V AC, 50/60 Hz	150-F625NBE
				230/240V AC, 50/60 Hz	150-F625NBA
	300...900	500	700	110/120V AC, 50/60 Hz	150-F780NBE
				230/240V AC, 50/60 Hz	150-F780NBA
	400...1200	710	1000	110/120V AC, 50/60 Hz	150-F970NBE
				230/240V AC, 50/60 Hz	150-F970NBA
	533...1600	900	1400	110/120V AC, 50/60 Hz	150-F1250NBE
				230/240V AC, 50/60 Hz	150-F1250NBA

(1) Motor FLA rating must fall within specified current range for unit to operate properly. Special consideration should be given when using a motor with a potentially high starting current (greater than ten times motor FLA) with the SMC Flex controller. Contact Rockwell Automation technical support for further guidance.
(2) For controllers with 24V AC/DC control power, separate 120V or 240V single-phase power supply is required for fan operation.
(3) Devices rated 108 A and greater are not equipped with line and load terminal lugs. See page 41 for terminal lug kits.

Table 38 - 500/575V AC SMC Flex Controllers for Use with Delta-connected Motors

Rated Voltage [V AC]	Motor Current [A](1)	Max. kW, 50 Hz	Max. Hp, 60 Hz	Control Power(2)	Open Type Cat. No.(3)
500 (kW) 575 (Hp)	1.7...8.7	5.5	7.5	100...240V AC, 50/60 Hz	150-F5NCD
				24V AC/DC	150-F5NCR
	8.7...43	15	40	100...240V AC, 50/60 Hz	150-F25NCD
				24V AC/DC	150-F25NCR
	14.9...74	45	60	100...240V AC, 50/60 Hz	150-F43NCD
				24V AC/DC	150-F43NCR
	20.8...104	55	100	100...240V AC, 50/60 Hz	150-F60NCD
				24V AC/DC	150-F60NCR
	29.4...147	90	150	100...240V AC, 50/60 Hz	150-F85NCD
				24V AC/DC	150-F85NCR
	47...187	132	150	100...240V AC, 50/60 Hz	150-F108NCD
				24V AC/DC	150-F108NCR
	59...234	160	200	100...240V AC, 50/60 Hz	150-F135NCD
				24V AC/DC	150-F135NCR
	116...348	250	350	100...240V AC, 50/60 Hz	150-F201NCD
				24V AC/DC	150-F201NCR
	145...435	315	400	100...240V AC, 50/60 Hz	150-F251NCD
				24V AC/DC	150-F251NCR
	183...549	400	500	100...240V AC, 50/60 Hz	150-F317NCD
				24V AC/DC	150-F317NCR
	208...625	450	600	100...240V AC, 50/60 Hz	150-F361NCD
				24V AC/DC	150-F361NCR
	277...831	560	900	100...240V AC, 50/60 Hz	150-F480NCD
				24V AC/DC	150-F480NCR
	283...850	560	900	110/120V AC, 50/60 Hz	150-F625NCE
				230/240V AC, 50/60 Hz	150-F625NCA
	300...900	630	900	110/120V AC, 50/60 Hz	150-F780NCE
				230/240V AC, 50/60 Hz	150-F780NCA
	400...1200	800	1300	110/120V AC, 50/60 Hz	150-F970NCE
				230/240V AC, 50/60 Hz	150-F970NCA
	533...1600	1100	1600	110/120V AC, 50/60 Hz	150-F1250NCE
				230/240V AC, 50/60 Hz	150-F1250NCA

(1) Motor FLA rating must fall within specified current range for unit to operate properly. Special consideration should be given when using a motor with a potentially high starting current (greater than ten times motor FLA) with the SMC Flex controller. Contact Rockwell Automation technical support for further guidance.
(2) For controllers with 24V AC/DC control power, separate 120V or 240V single-phase power supply is required for fan operation.
(3) Devices rated 108 A and greater are not equipped with line and load terminal lugs. See page 41 for terminal lug kits.

Accessories

You must not place protective modules on the load (motor) side of an SMC Flex controller when using an inside-the-delta connection or with pump or braking control options.

Table 39 - Protective Modules(1)

	Current Rating [A]	Description	Cat. No.
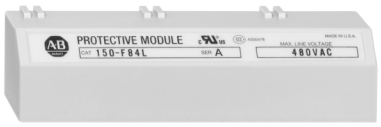	5...85	480V Protective Module	150-F84
	108...1250		150-F84L
	5...85	600V Protective Module	150-F86
	108...1250		150-F86L

(1) The same protective module mounts on the line or load side of the SMC Flex controller. Use of protective modules is highly recommended. For applications that require both line and load side protection, you must order two protective modules.

Table 40 - Terminal Lug Kits

	Connection Type	Current Range [A](1)	Wire Size Range	Total No. of Terminal Lugs Possible Each Side		Pkg. Qty.	Cat. No.
				Line Side	Load Side		
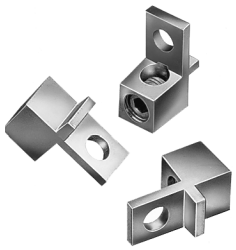	Line	108...135(2)	#6...250 MCM AWG 16 mm²...120 mm²	3	3	3	199-LF1
		201...251(2)		6	6	3	
		317...480(2)	#4...500 MCM AWG 25 mm²...240 mm²	6	6	3	199-LG1
		625...780	2/0...500 MCM	6	6	3	100-DL630
		970	4/0...500 MCM	3	3	3	100-DL860
		1250(3)	2/0...500 MCM	3	3	3	100-DL630
			4/0...500 MCM	3	3	3	100-DL860
	Delta	108...135	#4...500 MCM AWG 25 mm²...240 mm²	1	6(4)		1494R-N15
		201...251	1/0...250 MCM AWG 50 mm²...120 mm²	2	12(4)		1494R-N14
		317...480	3/0...500 MCM AWG 95 mm²...240 mm²	1	12(5)		150-LGSMC
		625...780	#4...500 MCM AWG 25 mm²...240 mm²	6(6)	6	3	100-DL630
		970...1250	#4...500 MCM AWG 25 mm²...240 mm²	6(6)	6	3	100-DL860

(1) 5...85 A units have box lugs standard. No additional lugs are required.
(2) When a multi-conductor lug is required, refer to the User Manual for appropriate lug catalog number.
(3) The 1250 A device requires (1) 100-DL630 and (1) 100-DL860 per connection.
(4) When connected in an inside-the-delta configuration, use Cat. No. 199-LF1 for load-side connections (T1...T6).
(5) When connected in an inside-the-delta configuration, use Cat. No. 199-LG1 for load-side connections (T1...T6).
(6) For 625...1250 A inside-the-delta connections, terminal blocks are required for line-side connections. For **fuse-protected** controllers, use Allen-Bradley Cat. No. 1492-BG (625...780 A devices: 2 per phase; 970...1250 A devices, 4 per phase). For **circuit breaker-protected** controllers, use Cooper Bussmann Cat. No. 16504-2 (625...780 A devices: 1 per phase; 970...1250 A devices, 2 per phase).

Table 41 - IEC Line- or Load-side Terminal Covers

	Description(1)	Current Range [A]	Pkg. Quantity	Cat. No.
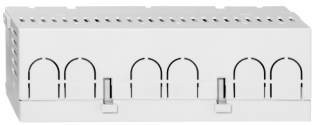	• Dead front protection • IP2X finger safe when used with 250 MCM cable	108...135	1	150-TC1
		201...251	1	150-TC2
	• Dead front protection • IP2X finger safe when used with 500 MCM cable	317...480	1	150-TC3

(1) 5...85 A units have terminal guards as standard. No additional terminal guards are required.

Table 42 - Human Interface Modules (HIMs) and Communication Modules

Description				Cat. No.
	Hand-held HIM	LCD display, Full Numeric Keypad[1]		20-HIM-A6
	Door-mounted HIM	Remote (panel mount) LCD Display, Full Numeric Keypad		20-HIM-C6S[2]
	HIM Interface Cables	HIM Interface Cable, 1 m (39 in)		20-HIM-H10
		Cable Kit (Male-Female) 0.33 m (1.1 ft)		1202-H03
		Cable Kit (Male-Female) 1 m (3.3 ft)		1202-H10
		Cable Kit (Male-Female) 3 m (9.8 ft)		1202-H30
		Cable Kit (Male-Female) 9 m (29.5 ft)		1202-H90
		DPI/SCANport™ One to Two Port Splitter Cable		1203-S03
Description			**For Use With**	**Cat. No.**
	Communication Modules	RS-485 DF1 Communication Adapter	SMC Flex	20-COMM-S
		PROFIBUS DP Communication Adapter		20-COMM-P
		ControlNet© Communication Adapter (Coax)		20-COMM-C
		Modbus/TCP Communication Adapter		20-COMM-M
		DeviceNet™ Communication Adapter		20-COMM-D
		EtherNet/IP™ Communication Adapter		20-COMM-E
		Dual-port EtherNet/IP Communication Adapter		20-COMM-ER
		HVAC Communication Adapter		20-COMM-H
		ControlNet Communication Adapter (Fiber)		20-COMM-Q
Connected Components Workbench™ Software		Programming Software	Windows 7/2000/XP/Vista Windows 10/11[3]	Available for download at rok.auto/ccw
DriveExecutive				9303-4DTE01ENE
DriveTools™ SP [4]				9303-4DTS01ENE
AnaCANda™ RS-232 to DPI		PC Interface	Serial	1203-SSS[5]
DPI to USB			USB	1203-USB[6]

(1) Require a 20-HIM-H10 cable to connect to the SMC Flex.
(2) A 3 m (9.8 ft.) Cat. No. 1202-C30 cable is provided.
(3) Connected Components Workbench software only.
(4) Includes DriveExecutive and DriveObserver™.
(5) Includes Cat. No. 1203-SFC and 1202-C10 cables.
(6) Includes Cat. No. 20-HIM-H10 and 22-HIM-H10 cables.

IMPORTANT Carefully check current range, line voltage and control input voltage when selecting an upgrade kit. Not all control voltages or current ranges can be upgraded.

Table 43 - Upgrade Kits

Description	Kit Contents[1]	Rated Current [A]	Line Voltage [V AC]	Control Voltage[2]	Cat. No.
Frame 3 SMC Flex to SMC-50 controllers with bypass upgrade kit	• 150-SCMD control module • 150-SM4 digital I/O module • 20-HIM-A6 LCD HIM	108	200...690	100...240V AC	150-S108UPGD
		135			150-S135UPGD
	• 150-SCMR control module • 20-HIM-A6 LCD HIM	108	200...690	24V DC[3]	150-S108UPGR[4]
		135			150-S135UPGR[4]
Frame 4 SMC Flex to SMC-50 controllers with bypass upgrade kit	• 150-SCMD control module • 150-SM4 digital I/O module • 20-HIM-A6 LCD HIM • Plastic mounting/transition cover	201	200...480	100...240V AC	150-S201UPGBD
			200...575		150-S201UPGCD
			200...690		150-S201UPGUD
		251	200...480		150-S251UPGBD
			200...575		150-S251UPGCD
			200...690		150-S251UPGUD
	• 150-SCMR control module • 20-HIM-A6 LCD HIM • Plastic mounting/transition cover	201	200...480	24V DC[3]	150-S201UPGBR[4]
			200...575		150-S201UPGCR[4]
			200...690		150-S201UPGUR[4]
		251	200...480		150-S251UPGBR[4]
			200...575		150-S251UPGCR[4]
			200...690		150-S251UPGUR[4]

(1) Kit contains one of each catalog number listed.
(2) The SMC-50 control module provides two (2) 24V DC control inputs. If you need additional inputs, you must use 100...240V AC inputs (requires 150-SM4 option module).
(3) 24V DC control voltage ONLY. Not compatible with 24V AC control voltage.
(4) Consult your local Rockwell Automation sales office or Allen-Bradley distributor for availability.

Specifications

Table 44 - SMC Flex Feature Specifications

Attribute		Description
Standard Features		
Installation	Power Wiring	standard squirrel-cage induction motor or a Wye-Delta, six-lead motor
	Control Wiring	2- and 3-wire control for a wide variety of applications
Configuration/Setup	Keypad	Front keypad with backlit LCD display. Optional 20-HIM-A module can be connected using the available DPI port.
	Software	parameter values are downloaded to the SMC Flex controller by using the Connected Components Workbench, DriveTools, and DriveExplorer programming software packages
Communications		One DPI provided for connection to optional human interface and one DPI provided for connection to communication modules.
Starting and Stopping Modes		Soft Start Current Limit Start Dual Ramp Full Voltage Linear Speed Acceleration Preset Slow Speed Soft Stop
Protection and Diagnostics		Power loss, line fault, voltage unbalance, excessive starts/hour, phase reversal, undervoltage, overvoltage, controller temp, stall, jam, open gate, overload, underload, communication fault.
Metering		Amps, volts, kW, kWh, MW, MWH, elapsed time, power factor, motor thermal capacity usage.
Alarm Contact		Overload, underload, undervoltage, overvoltage, unbalance, jam, stall, and ground fault
Status Indication		Stopped, starting, stopping, at speed, alarm, and fault.
Auxiliary Contacts		Four fully programmable contacts as normal/up-to-speed/fault/alarm/network (N.O./N.C.), or external bypass (N.O. only).
Optional Features		
Pump Control		Helps reduce fluid surges in centrifugal pumping systems during starting and stopping period. Starting time is adjustable from 0…30 s. Stopping time is adjustable from 0…120 s.
Braking Control[1]	SMB Smart Motor Braking	Provides motor braking without additional equipment for applications that require the motor to stop quickly. Braking current is adjustable from 0…400% of the motor's full-load current rating.
	Accu-Stop	Provides controlled position stopping. During stopping, braking torque is applied to the motor until it reaches preset slow speed (7% or 15% of rated speed) and holds the motor at this speed until a stop command is given. Braking torque is then applied until the motor reaches zero speed. Braking current is programmable from 0…450% of full-load current.
	Slow Speed with Braking	Used on applications that require slow speed (in the forward direction) for positioning or alignment and also require braking control to stop.

(1) Not intended to be used as an emergency stop. See the applicable standards for emergency stop requirements.

Table 45 - Power and Control Circuit Ratings

Attribute	Device Rating	UL/CSA/NEMA	IEC
Power Circuit			
Rated Operation Voltage	480V	200...480V AC (–15%, +10%)	200...415V
	600V	200...600V AC (–15%, +10%)	200...500V
	690V	230...600V AC (–15%, +10%)	230...690V/Y (–15%, +10%)
Rated Insulation Voltage	480V	–	500V
	600V		500V
	690V		690V
Rated Impulse Voltage	480V	–	6000V
	600V		
	690V		
Dielectric Withstand	480V	2200V AC	2500V
	600V		
	690V		
Repetitive Peak Inverse Voltage Rating	480V	1400V	1400V
	600V	1600V	1600V
	690V	1800V	1800V
Operating Frequency	All	50/60 Hz	
Utilization Category	5...480 A	MG 1	AC-53b:3.0-50:1750
	625...1250 A	MG 1	AC-53b:3.0-50:3550
Protection Against Electrical Shock	5...85 A	–	IP20
	108...480 A		IP2X (with terminal covers)
	625...1250 A		IP00 (open device)
DV/DT Protection	480V and 600V	RC Snubber Network	
	690V	None	
Transient Protection	480V and 600V	Metal Oxide Varistors: 220 Joules (optional)	
	690V	None	
Control Circuit			
Rated Operational Voltage[1]	5...480 A	100...240V AC or 24V AC/DC	
	625...1250 A	110/120V AC and 230/240V AC	
Rated Insulation Voltage	All	–	240V
Rated Impulse Voltage	All	–	3000V
Dielectric Withstand	All	1600V AC	2000V
Operating Frequency	All	50/60 Hz	
Input on-state voltage minimum		85V AC, 19.2V DC / 20.4V AC	
Input on-state current		20 mA @120V AC / 40 mA @ 240V AC, 7.6 mA @ 24V AC/DC	
Input off-state voltage maximum		50V AC, 10V DC / 12V AC	
Input off-state current @ input off-state voltage		<10 mA AC, <3 mA DC	

(1) 690V power is only available with 100...240V control.

Table 46 - Short-circuit Protection Performance, 200...600V, Type 1 Coordination[1][2]

SCCR List[3]	Device Rating	Max. Standard Available Fault	Max. Standard Fuse [A][4]	Max. Standard Available Fault	Max. Circuit Breaker [A]
Line Device Operational Current Rating [A]	5	5 kA	20	5 kA	20
	25	5 kA	100	5 kA	100
	43	10 kA	150	10 kA	150
	60	10 kA	225	10 kA	225
	85	10 kA	300	10 kA	300
	108	10 kA	400	10 kA	300
	135	10 kA	500	10 kA	400
	201	18 kA	600	18 kA	600
	251	18 kA	700	18 kA	700
	317	30 kA	800	30 kA	800
	361	30 kA	1000	30 kA	1000
	480	42 kA	1200	42 kA	1200
	625	42 kA	1600	42 kA	1600
	780	42 kA	1600	42 kA	2000
	970	85 kA	2500	85 kA	2500
	1250	85 kA	3000	85 kA	3200
Delta Device Operational Current Rating [A]	8.7	5 kA	35	5 kA	35
	43	5 kA	150	5 kA	150
	74	10 kA	300	10 kA	300
	104	10 kA	400	10 kA	400
	147	10 kA	400	10 kA	400
	187	10 kA	600	10 kA	500
	234	10 kA	700	10 kA	700
	348	18 kA	1000	18 kA	1000
	435	18 kA	1200	18 kA	1200
	549	30 kA	1600	30 kA	1600
	625	30 kA	1600	30 kA	1600
	831	42 kA	1600	30 kA	1600
	831	42 kA	1600	42 kA	1200
	850	42 kA	1600	42 kA	2000
	900	42 kA	1600	42 kA	2000
	1200	85 kA	3000	85 kA	3200
	1600	85 kA	3000	85 kA	3200

(1) Type 1 performance/protection indicates that, under a short-circuit condition, the fuse- or circuit breaker-protected starter shall cause no damage to persons or the installation but it may not be suitable for further service without repair or replacement.
(2) For short-circuit current rating (SCCR) information for an enclosed panel with external bypass or isolation contactor, see rok.auto/sccr.
(3) Consult local codes for proper sizing of short circuit protection.
(4) Non-time delay fuses (K5 — 5...480A (8.7...831 A) devices; Class L — 625...1250A (850...1600 A) devices).

Table 47 - Short-circuit Protection Performance, 200...600V, Type 1 Coordination

SCPD Performance[1]			Type 1 Ratings[2]				
Motor Connection Type	Cat. No.	Current Rating [A]	Class J or Class L Fuse[3]		Inverse Time (Thermal Magnetic) Circuit Breaker 480V, 65 kA Max.		
			Max. High Capacity Available Fault (600V) [kA]	Max. Current [A]	Max. Current [A]	Cat. No.	Rating Plug Cat. No.
Line Connection	150-F5N...	5	70	10	Pending		
	150-F25N...	25		50			
	150-F43N...	43		90			
	150-F60N...	60		125			
	150-F85N...	85		175			
	150-F108N...	108		200	300	140G-K6F3-D30	–
	150-F135N...	135		225	400	140G-K6F3-D40	–
	150-F201N...	201		350	600	140G-M6F3-D60	–
	150-F251N...	251		400	700	140G-M6F3-D80	–
	150-F317N...	317	69	500	800	140G-N6H3-E12	140G-NRP-D80
	150-F361N...	361		600	1000	140G-N6H3-E12	140G-NRP-E10
	150-F480N...	480		800	1200	140G-N6H3-E12	–
	150-F625N...	625	74	1600	Pending		
	150-F780N...	780		1600			
	150-F970N...	970	85	2500			
	150-F1250N...	1250		3000			
Inside-the-Delta Connection	150-F5N...	8.7	70	17.5	Pending		
	150-F25N...	43		90			
	150-F43N...	74		150			
	150-F60N...	104		200			
	150-F85N...	147		200			
	150-F108N...	187		300	400	140G-K6F3-D40	–
	150-F135N...	234		400	400	140G-K6F3-D40	–
	150-F201N...	348		600	800	140G-M6F3-D80	–
	150-F251N...	435		800	800	140G-M6F3-D80	–
	150-F317N...	549	69	1000	1200	140G-N6H3-E12	–
	150-F361N...	625		1200	1200	140G-N6H3-E12	–
	150-F480N...	831		1600	1200	140G-N6H3-E12	–
	150-F625N...	850	74	1600	Pending		
	150-F780N...	900		1600			
	150-F970N...	1200	85	3000			
	150-F1250N...	1600		3000			

(1) Consult local codes for proper sizing of short-circuit protection.
(2) Basic Requirements for Type 1 Coordination: Under the short-circuit condition, the starter shall cause no danger to persons or to the installation. The starter may not be suitable for further service without repair or replacement of parts. For further details, refer to UL 508/CSA C22.2 No. 14 and EN 60947-4-2.
(3) High Capacity fault ratings when used with time delay Class J or time delay Class L fuse.

Table 48 - Short-circuit Protection Performance, 690V, Type 1 Coordination(1)

SCCR List(2)	Device Rating	Max. Standard Available Fault	Max. Ampere Tested — North American Style	Max. Ampere Tested — European Style
Maximum FLC	108	70 kA	A070URD33xxx500	6,9 gRB 73xxx400 6,6URD33xxx500
	135	70 kA	A070URD33xxx500	6,9 gRB 73xxx400 6,6URD33xxx500
	201	70 kA	A070URD33xxx700	6,9 gRB 73xxx630 6,6URD33xxx700
	251	70 kA	A070URD33xxx700	6,9 gRB 73xxx630 6,6URD33xxx700
	317	70 kA	A070URD33xxx900	6,9 gRB 73xxx800 6,6URD33xxx900
	361	70 kA	A070URD33xxx900	6,9 gRB 73xxx800 6,6URD33xxx900
	480	70 kA	A070D33xxx1250 A100URD73xxx1250	9 URD 73xxx1250 6,6URD33xxx1250
	625	70 kA	A070URD33xxx1400	6,6URD33xxx1400
	780	70 kA	A070URD33xxx1400	6,6URD33xxx1400
	970	85 kA	Two fuses in parallel A070URD33xxx1250	Two fuses in parallel 6,6URD33xxx1250
	1250	85 kA	Two fuses in parallel A070URD33xxx1250	Two fuses in parallel 6,6URD33xxx1250

(1) Type 1 performance/protection indicates that, under a short-circuit condition, the fuse- or circuit breaker-protected starter shall cause no damage to persons or the installation but it may not be suitable for further service without repair or replacement.
(2) Consult local codes for proper sizing of short circuit protection.

Table 49 - Power Requirements

	Device Rating [A]	Control Power	Description	
Control Module	1...480	100...240V AC (-15%, +10%)	Transformer	75 VA
		24V AC (-15%, +10%)	Transformer	130 VA
		24V DC (-15%, +10%)	Inrush Current	5 A
			Inrush Time	250 ms
			Transient Watts	60 W
			Transient Time	500 ms
			Steady State Watts	24 W
			Minimum Allen-Bradley Power Supply	1606-XLP50E
	625...1250	751 VA (recommended 800 VA)		
Heatsink Fan(s)(1)		5...135 A, 20 VA		
		201...251 A, 40 VA		
		317...480 A, 60 VA		
		625...1250 A, 150 VA		

(1) Heatsink fans can be powered by either 110/120V AC or 220/240V AC.

Table 50 - Steady-state Heat Dissipation

Controller Rating [A]	Steady-state Heat Dissipation with Control and Fan Power [W]
5	70
25	70
43	81
60	97
85	129
108	91
135	104
201	180

Controller Rating [A]	Steady-state Heat Dissipation with Control and Fan Power [W]
251	198
317	225
361	245
480	290
625	446
780	590
970	812
1250	1222

Table 51 - Auxiliary Contact Ratings

Contact Type	Attribute	Value
Auxiliary Contacts • 19/20 (Aux #1) • 29/30 (Aux #2) • 31/32 (Aux #3) • 33/34 (Aux #4)	Type of Control Circuit	Electromagnetic relay
	Number of Contacts	1
	Type of Contacts	programmable N.O./N.C.
	Type of Current	AC
	Rated Operational Current	3 A @ 120V AC, 1.5 A @ 240V AC
	Conventional Thermal Current I_{th} AC/DC	5 A
	Make/Break VA	3600/360
	Utilization Category	AC-15/DC

Table 52 - Input Ratings

Input Type	Attribute	Value
PTC Input Ratings	Response Resistance	3400 Ω ± 150 Ω
	Reset Resistance	1600 Ω ±100 Ω
	Short-circuit Trip Resistance	25 Ω ±10 Ω
	Max. Voltage at PTC Terminals (RPTC = 4 kΩ)	< 7.5V
	Max. Voltage at PTC Terminals (RPTC = open)	30V
	Max. No. of Sensors.	6
	Max. Cold Resistance of PTC Sensor Chain	1500 Ω
	Response Time	800 ms
Tachometer Input		0…5V DC, 4.5V DC = 100% Speed

Table 53 - Environmental Ratings

Attribute	Value
Operating Temperature Range	-5…+50 °C (23…+122 °F) (open); -5…+40 °C (23…+104 °F) (enclosed)
Storage and Transportation Temperature Range	-20…+75 °C (-4…+167 °F)
Altitude	2000 m (6560 ft)(1)
Humidity	5…95% (noncondensing)
Pollution Degree	2

(1) The product's allowable operational ambient temperature must be derated by -3 °C (-27 °F) per 1000 m (3280 ft.). Maximum operating altitude is 7000 m (23,000 ft.). Current rating of the SMC Flex does not change for altitudes that require a lower ambient temperature.

Table 54 - Mechanical Ratings

Attribute		Device Rating	Value
Resistance to Vibration	Operational	All	1.0 G Peak, 0.15 mm (0.006 in.) displacement
	Non-Operational	5…480 A	2.5 G Peak, 0.38 mm (0.015 in.) displacement
		625…1250 A	1.0 G Peak, 0.15 mm (0.006 in.) displacement
Resistance to Shock	Operational	5…85 A	15 G
		108…480 A	5.5 G
		625…1250 A	4 G
	Non-Operational	5…85 A	30 G
		108…480 A	25 G
		625…1250 A	12 G
Construction	Power Poles	5…85 A	Heatsink thyristor modular design
	Power Poles	108…1250 A	Heatsink hockey puck thyristor modular design
	Control Modules		Thermoset and Thermoplastic Moldings
	Metal Parts		Plated Brass, Copper, or Painted Steel

Table 55 - Power and Control Terminals

Attribute	Device Rating	Value	
		Line Side	Load side
Power Terminals	5...85 A	Cable size – Upper – 2.5...95 mm^2 (14...3/0 AWG) Lower – 0.8...2.5 mm^2 (18...14 AWG)	Cable size – Upper – 2.5...50 mm^2 (14...1 AWG) Lower – 0.8...2.5 mm^2 (18...14 AWG)
		Tightening torque – 14.7 N•m (130 lb•in) Wire strip length–18...20 mm (0.22...0.34 in.)	
	108...135 A	One M10 x 1.5 diameter hole per power pole	
	201...251 A	Two M10 x 1.5 diameter holes per power pole	
	317...480 A	Two M12 x 1.75 diameter holes per power pole	
	625...1250 A	Two 13.5 mm (0.53 in.) diameter holes per power pole	
Power Terminal Markings		NEMA, CENELEC EN50 012	
Control Terminals	M3 screw clamp	Clamping yoke connection	

Table 56 - EMC Emission Ratings

Attribute		Value
EMC Emission Levels	Conducted Radio Frequency Emissions	Class A
	Radiated Emissions	Class A
EMC Immunity Levels	Electrostatic Discharge	8 kV Air Discharge
	Radio Frequency Electromagnetic Field	Per EN/IEC 60947-4-2
	Fast Transient	Per EN/IEC 60947-4-2
	Surge Transient	Per EN/IEC 60947-4-2

Table 57 - Overload Characteristics

Current Range [A]	Line-connected Controllers	Delta-connected Controllers
5	1...5	1.7...9
25	5...25	8.6...43
43	8.6...43	14.8...75
60	12...60	20.8...104
85	17...85	29.4...147
108	27...108	47...187
135	34...135	59...234
201	67...201	116...348
251	84...251	145...435
317	106...317	183...549
361	120...361	208...625
480	160...480	277...831
625	208...625	283...850
780	260...780	300...900
970	323...970	400...1200
1250	416...1250	533...1600
Trip Classes	10, 15, 20, and 30	
Trip Current Rating	117% of Motor FLC	
Number of Poles	3	

Table 58 - Standards Compliance and Certifications

Standards Compliance
UL 508
CSA C22.2 No.14
EN/IEC 60947-1
EN/IEC 60947-4-2

Certifications
cULus Listed (Open Type) (File No. E96956, Guides NMFT, NMFT7)
CSA Certified (File No. LR 1234)
CE Marked
CCC Certified

Typical Wiring Diagrams

Figure 12 - Wiring Diagram for SMC Flex—Line Controller

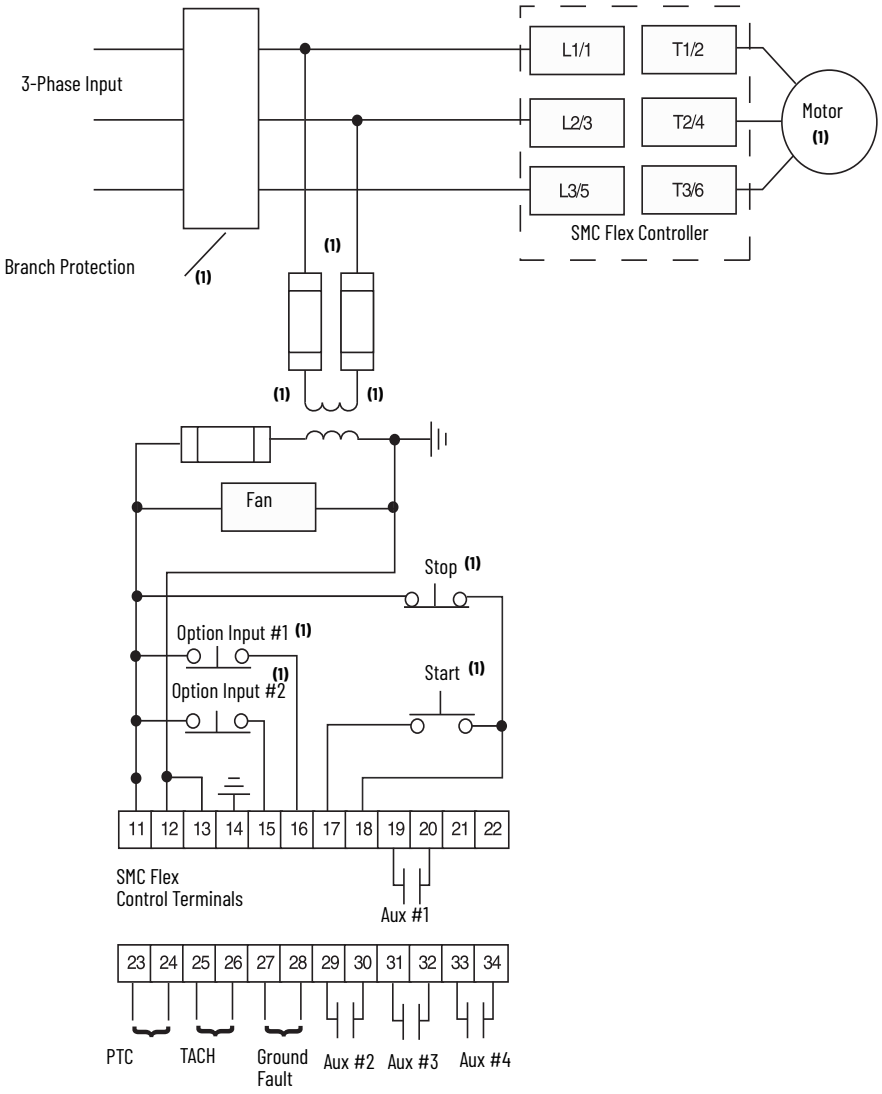

Note	Information
1	Customer supplied

Approximate Dimensions and Shipping Weights

Dimensions are in millimeters (inches). Dimensions are not intended for manufacturing purposes.

Open Controllers

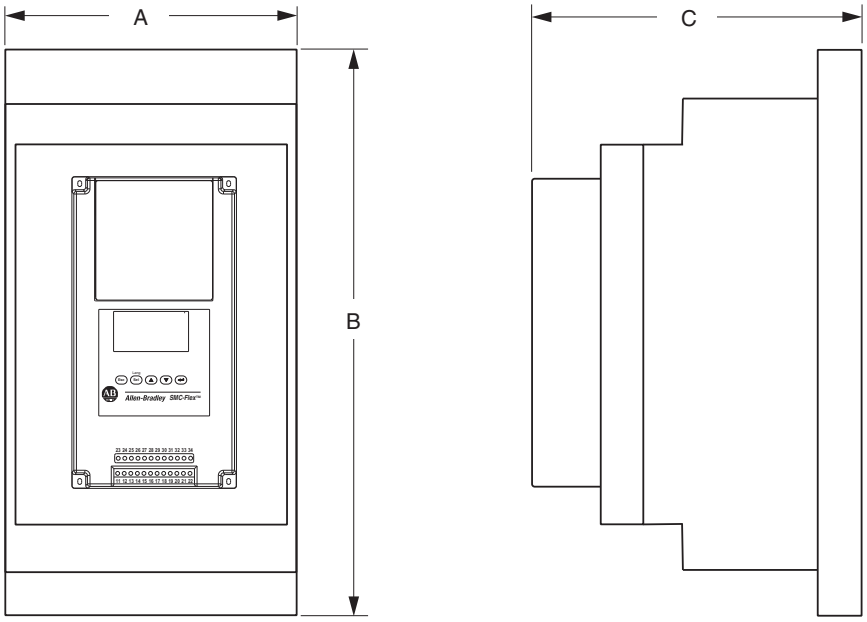

Rated Current [A]	B Height	A Width	C Depth	Weight
5…85	321.0 (12.60)	150.0 (5.90)	203.0 (8.00)	5.7 kg (12.5 lb)
108…135	443.7 (17.47)	196.4 (7.74)	212.2 (8.35)	15.0 kg (33.0 lb)
201…251	560.0 (22.05)	225.0 (8.86)	253.8 (9.99)	30.4 kg (67.0 lb)
317…480	600.0 (23.62)	290.0 (11.42)	276.5 (10.89)	45.8 kg (101 lb)
625…780	1041.1 (41.00)	596.9 (23.50)	346.2 (13.63)	179 kg (395 lb)
970…1250	1041.1 (41.00)	596.9 (23.50)	346.2 (13.63)	224 kg (495 lb)

Figure 13 - 5...85 A Controllers

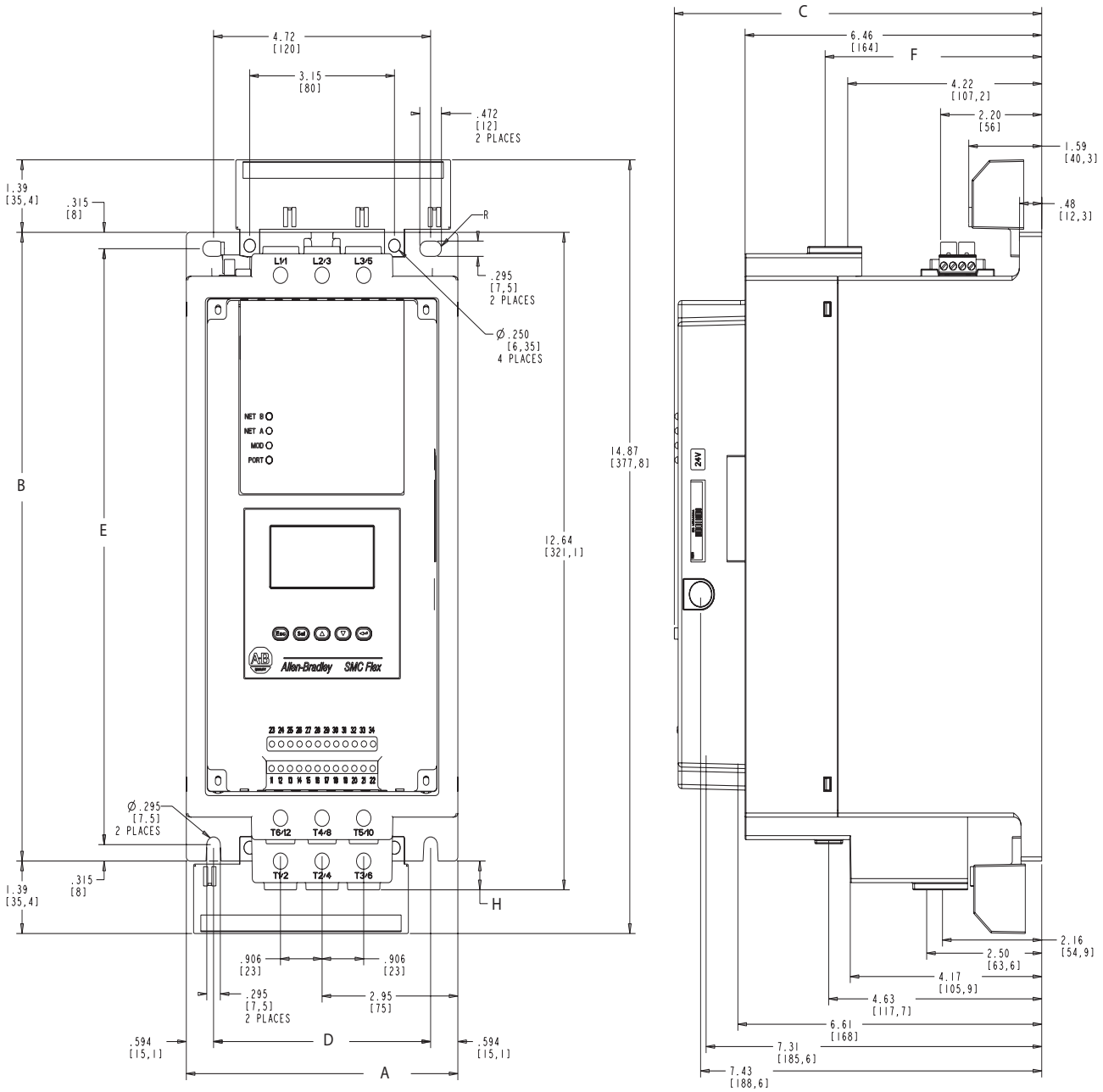

Unit	A Width	B Height	C Depth	D	E	F	H	Approx. Ship. Wt.
mm	150.1	307	203.1	120	291	119.8	14.1	5.7 kg
in.	5.91	12.09	8.00	4.72	11.46	4.72	0.56	12.6 lb.

Figure 14 - 108...135 A Controllers

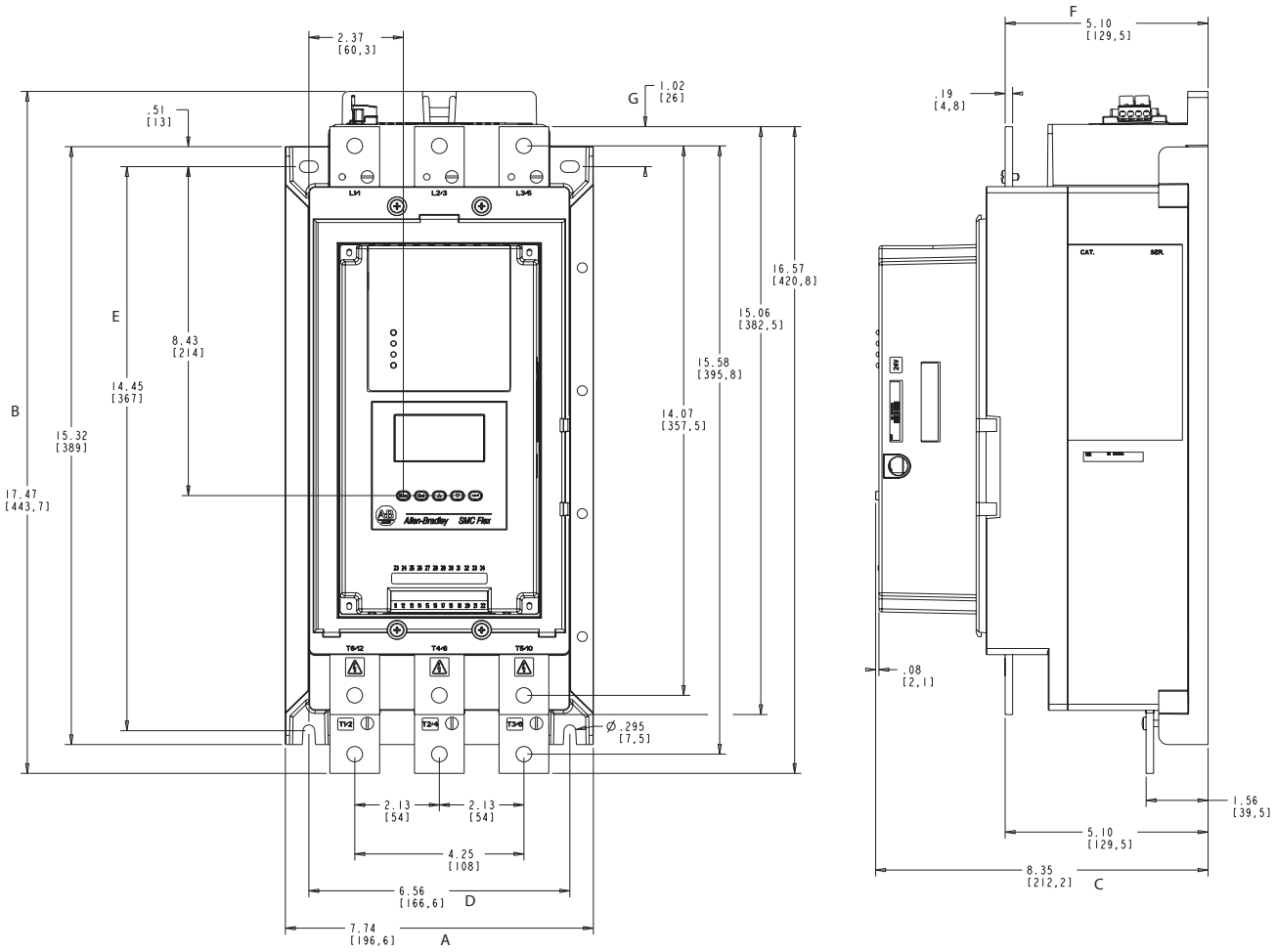

Unit	A Width	B Height	C Depth	D	E	F	G	Approx. Ship. Wt.
mm	196.4	443.7	212.2	166.6	367	129.5	26	15 kg
in.	7.74	17.47	8.35	6.56	14.45	5.10	1.02	33 lb.

Figure 15 - 201...251 A Controllers

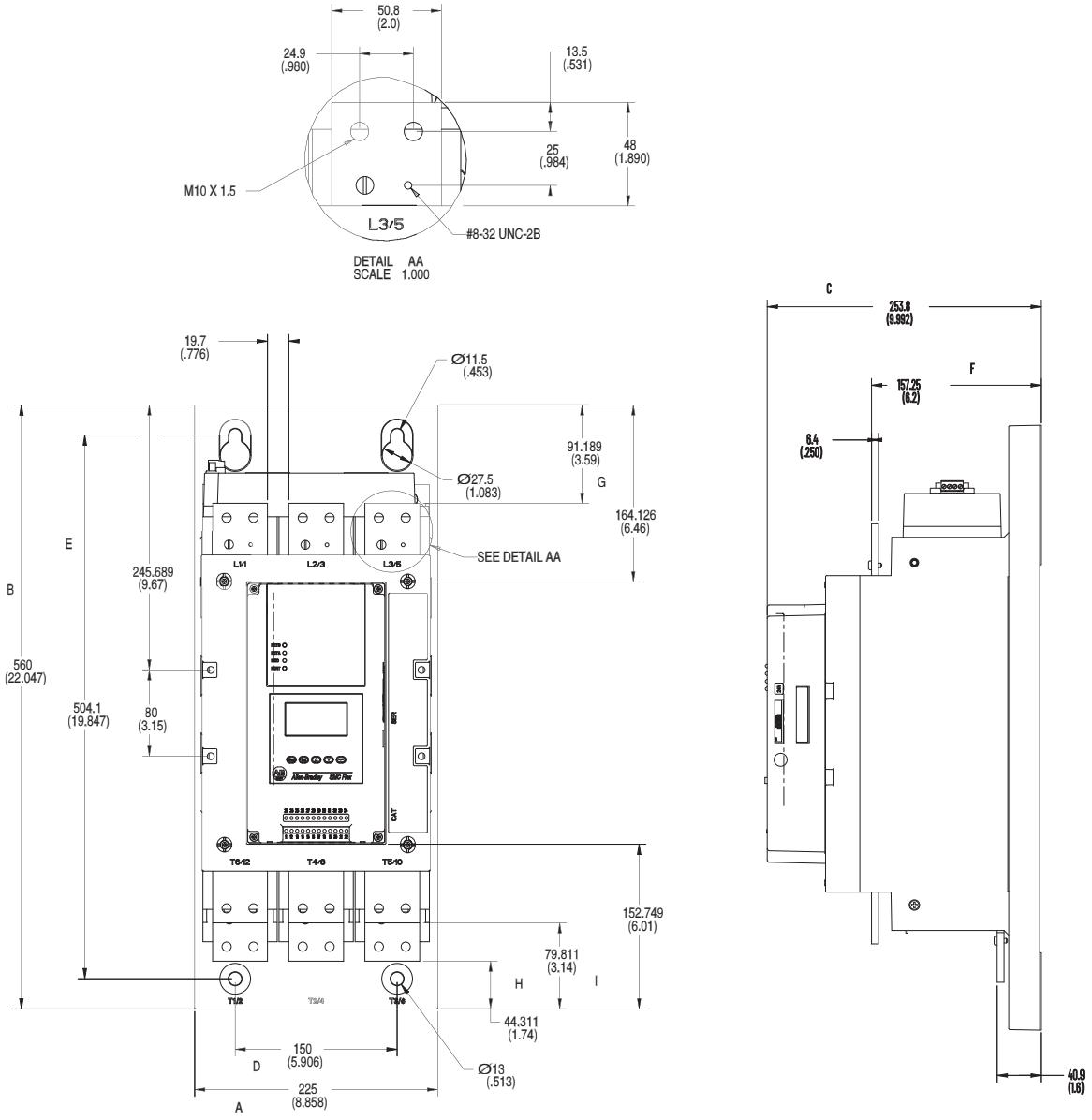

Unit	A Width	B Height	C Depth	D	E	F	G	H	I	Approx. Ship. Wt.
mm	225	560	253.8	150	504.1	157.25	91.189	44.311	79.811	30.4 kg
in.	8.858	22.047	9.992	5.906	19.847	6.2	3.59	1.74	3.14	67 lb.

Figure 16 - Dimensions: 317...480 A Controllers

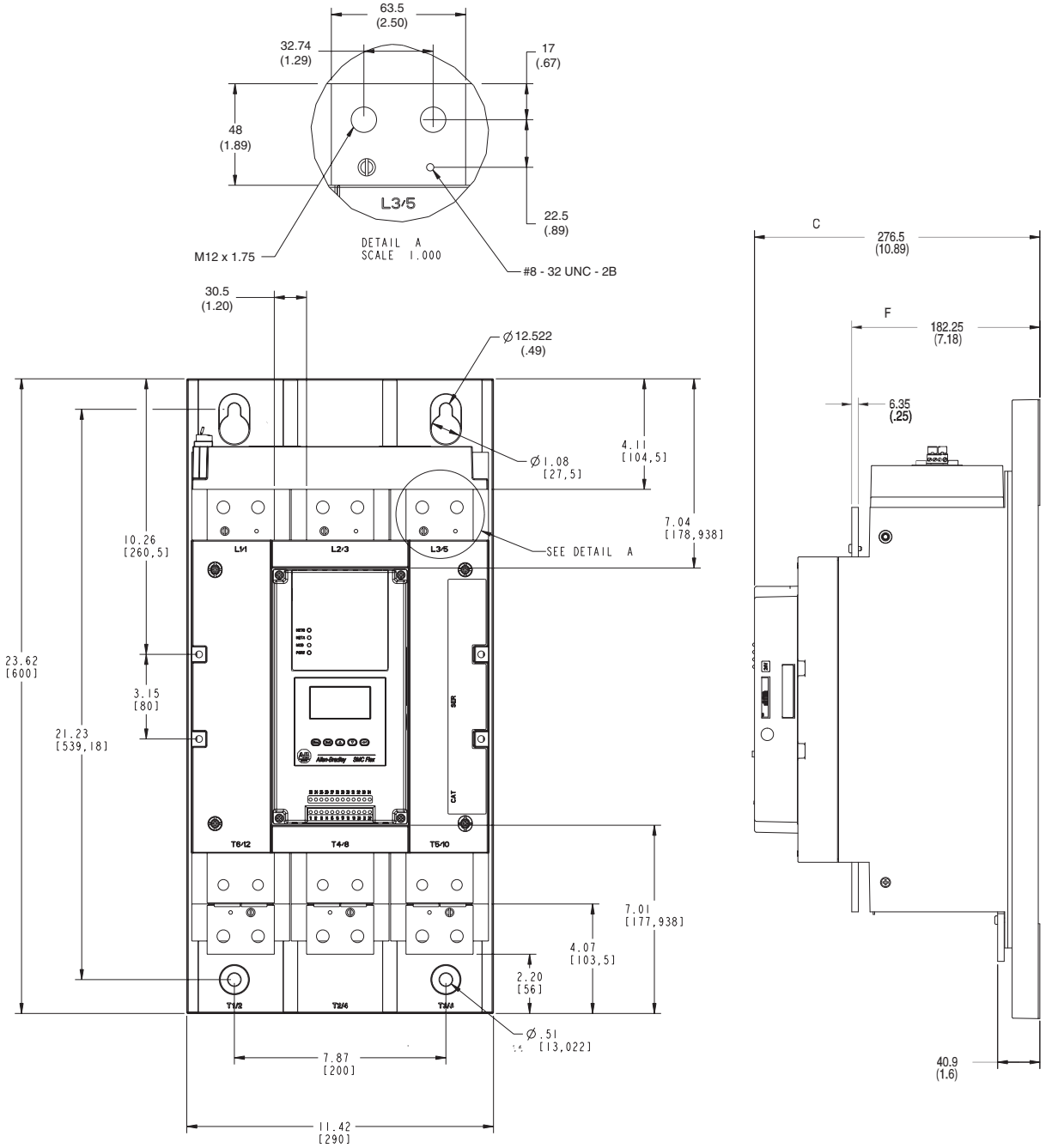

Unit	A Width	B Height	C Depth	D	E	F	G	H	I	Approx. Ship. Wt.
mm	290	600	276.5	200	539.18	182.25	104.5	55.5	103.5	45.8 kg
in.	11.42	23.62	10.89	7.87	21.23	7.18	4.11	2.19	4.07	101 lb.

Figure 17 - Dimensions: 625...780 A Controllers

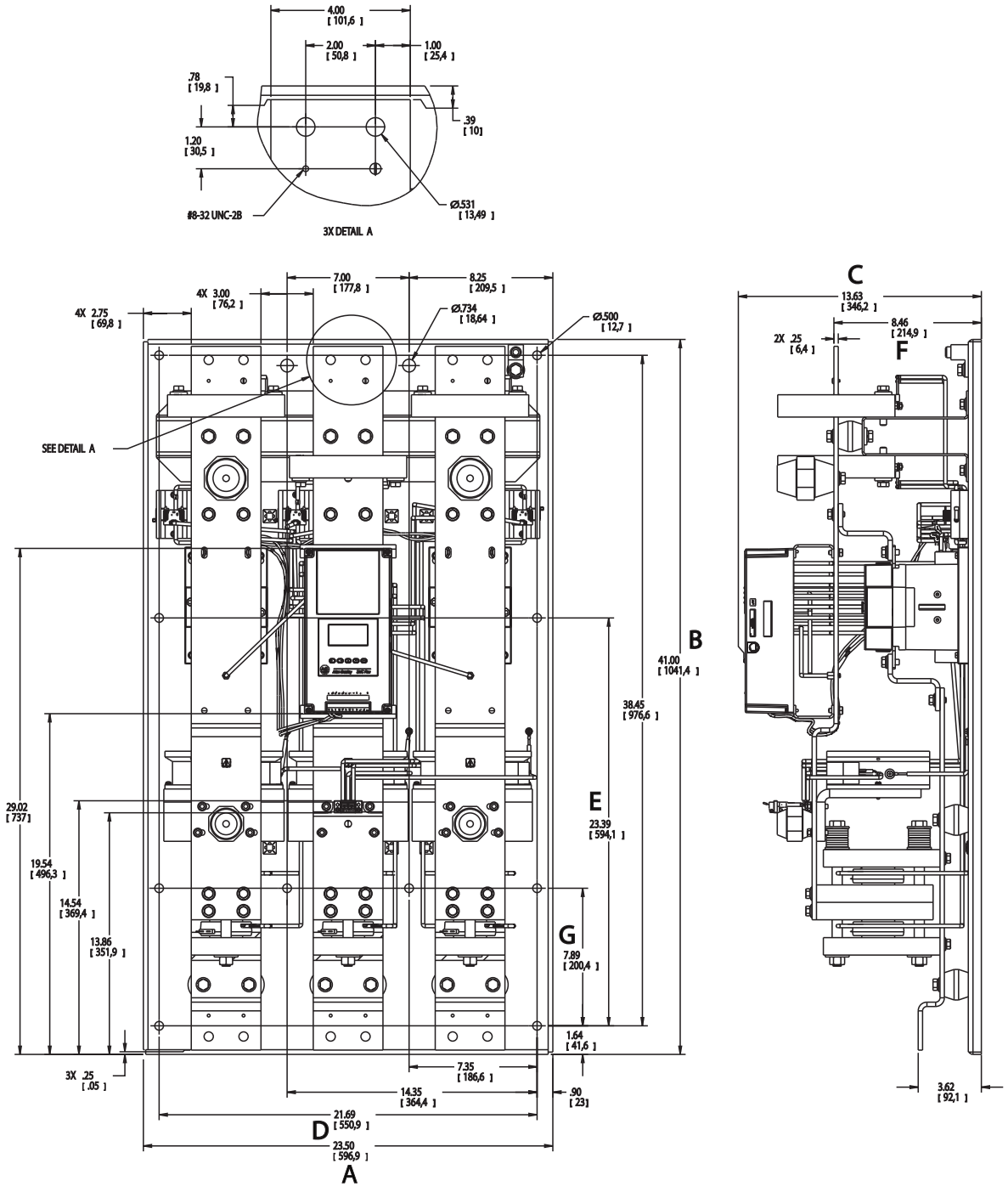

Unit	A Width	B Height	C Depth	D	E	F	G	Approx. Ship. Wt.
mm	596.9	1041.4	346.2	550.9	594.1	214.9	200.4	179 kg
in.	23.5	41.0	13.63	21.69	23.39	8.46	7.89	395 lb.

Figure 18 - 970...1250 A Controllers

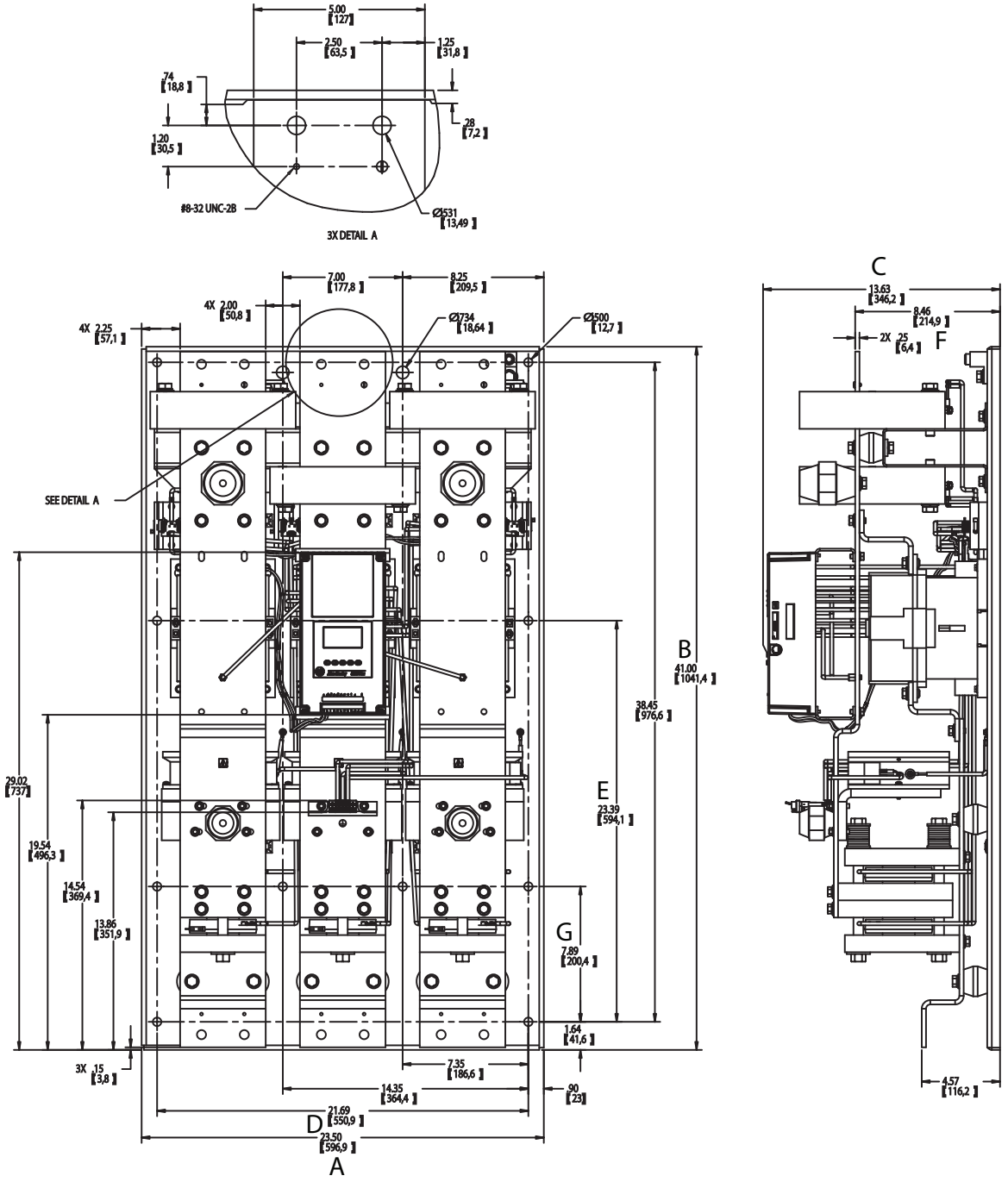

Unit	A Width	B Height	C Depth	D	E	F	G	Approx. Ship. Wt.
mm	596.9	1041.4	346.2	550.9	594.1	214.9	200.4	224 kg
in.	23.5	41.0	13.63	21.69	23.39	8.46	7.89	495 lb.

Figure 19 - Minimum Enclosure Size

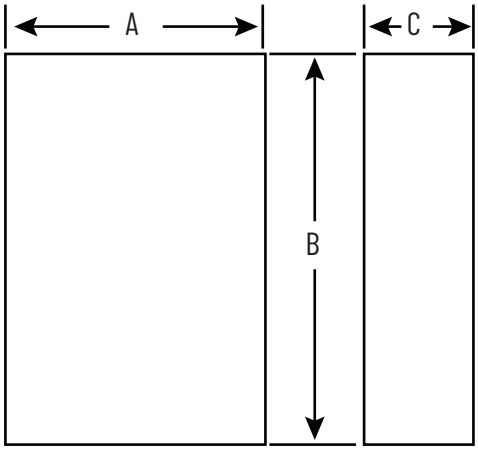

Rated Current [A]	B Height [mm (in.)]	A Width [mm (in.)]	C Depth [mm (in.)]
5	610 (24)	406 (16)	254 (10)
25	610 (24)	406 (16)	254 (10)
43	610 (24)	406 (16)	254 (10)
60	610 (24)	406 (16)	254 (10)
85	610 (24)	406 (16)	254 (10)
108	762 (30)	610 (24)	305 (12)
135	762 (30)	610 (24)	305 (12)
201	965 (38)	762 (30)	356 (14)
251	965 (38)	762 (30)	356 (14)
317	1295 (51)	914 (36)	356 (14)
361	1295 (51)	914 (36)	356 (14)
480	1295 (51)	914 (36)	356 (14)
625	2286 (90)	762 (30)	508 (20)
780	2286 (90)	762 (30)	508 (20)
970[1]	2286 (90)	762 (30)	508 (20)
1250[1]	2286 (90)	762 (30)	508 (20)

(1) 970 and 1250 A SMC Flex controllers require a door-mounted fan that is capable of delivering 240 cfm. Appropriate inlet and outlet filtering is required.

The SMC-50 controller has a scalable design, allowing you the flexibility to satisfy a wide variety of control needs. Advanced monitoring and protection, superior communications capabilities, and Energy Saver mode help increase efficiency and reduce downtime. Three-phase control, built-in overload, removable control module and removable terminal blocks are combined in a cost-effective package with your choice of internal bypass or solid-state power structures. Normal- and heavy-duty ratings, expandable I/O and sensor capability, LCD screen or personal computer software setup and network integration capabilities increase application scalability.

Modes of operation include the following:

- Soft Start
- Current Limit Start
- Selectable Kickstart
- Coast-to-rest
- Soft Stop
- Full Voltage Start
- Dual Ramp Start
- Pump Start
- Preset Slow Speed
- Pump Stop
- Smart Motor Braking
- Accu-Stop
- Slow Speed with Braking
- Resistive Load
- Sensorless Linear Speed Acceleration
- Sensorless Linear Speed Deceleration
- Torque Control
- Integral Motor Winding Heater
- Energy Saver
- Emergency Run
- External Bypass

Catalog Number Explanation

Examples that are given in this section are not intended to be used for product selection. Use ProposalWorks software to configure the SMC-50 controller. ProposalWorks software is available from rok.auto/systemtools.

150-S	135	N	B	D
a	b	c	d	e

a	
Bulletin Number	
Code	**Description**
150-S	SMC-50 Motor Controller

b			
Controller Type and Rating			
SMC-50 Controller with Internal Bypass		**Solid-state SMC-50 Controller**	
Code	**Description**	**Code**	**Description**
108	108 A with Internal Bypass	B1	90 A
135	135 A with Internal Bypass	B2	110 A
201	201 A with Internal Bypass	B3	140 A
251	251 A with Internal Bypass	B4	180 A
317	317 A with Internal Bypass	C1	210 A
361	361 A with Internal Bypass	C2	260 A
480	480 A with Internal Bypass	C3	320 A
		D1	361 A
		D2	420 A
		D3	520 A

c	
Enclosure Type	
Code	**Description**
N	Open

d	
Line Voltage	
Code	**Description**
B	200...480V AC, 3-Phase, 50 and 60 Hz
U	200...690V AC, 3-Phase, 50 and 60 Hz

e	
Control Voltage	
Code	**Description**
D	100...240V AC (two 24V DC inputs and two relay outputs standard)
R	24V DC (two 24V DC inputs and two relay outputs standard)

Product Selection– SMC-50 Controller with Internal Bypass

For Use with Line-connected Motors

Utilization Category: AC-53b:3.0-50:1750. Start Not to Exceed: 300% of the controller maximum current rating, 50 second start time, two starts per hour with 50 °C (122 °F) surrounding air ambient temperature.

Use the SMC Estimation Wizard and SMC Thermal Estimation Wizard to confirm that the SMC controller selection meets the application requirements. See Sizing and Selection Tools for more information. For additional assistance, visit rok.auto or contact Industrial Controls Technical Support by email at raictechsupport@ra.rockwell.com or by phone at +1 440-646-5800.

Table 59 - 200/208V AC and 230V AC SMC-50 Controllers with Internal Bypass for use with Line-connected Motors

Rated Voltage [V AC]	Motor Current [A](1)	Max. kW, 50 Hz	Max. Hp, 60 Hz	Control Power(2)	Cat. No.(3)
200/208	27...108	–	30	100...240V AC, 50/60 Hz	150-S108NBD
				24V DC	150-S108NBR
	34...135	–	40	100...240V AC, 50/60 Hz	150-S135NBD
				24V DC	150-S135NBR
	67...201	–	60	100...240V AC, 50/60 Hz	150-S201NBD
				24V DC	150-S201NBR
	84...251	–	75	100...240V AC, 50/60 Hz	150-S251NBD
				24V DC	150-S251NBR
	106...317	–	100	100...240V AC, 50/60 Hz	150-S317NBD
				24V DC	150-S317NBR
	120...361	–	125	100...240V AC, 50/60 Hz	150-S361NBD
				24V DC	150-S361NBR
	160...480	–	150	100...240V AC, 50/60 Hz	150-S480NBD
				24V DC	150-S480NBR
230	27...108	30	40	100...240V AC, 50/60 Hz	150-S108NBD
				24V DC	150-S108NBR
	34...135	37	50	100...240V AC, 50/60 Hz	150-S135NBD
				24V DC	150-S135NBR
	67...201	55	75	100...240V AC, 50/60 Hz	150-S201NBD
				24V DC	150-S201NBR
	84...251	75	100	100...240V AC, 50/60 Hz	150-S251NBD
				24V DC	150-S251NBR
	106...317	90	125	100...240V AC, 50/60 Hz	150-S317NBD
				24V DC	150-S317NBR
	120...361	110	150	100...240V AC, 50/60 Hz	150-S361NBD
				24V DC	150-S361NBR
	160...480	132	200	100...240V AC, 50/60 Hz	150-S480NBD
				24V DC	150-S480NBR

(1) Motor FLA rating must fall within specified current range for unit to operate properly. Special consideration should be given when using a motor with a potentially high starting current (greater than ten times motor FLA) with the SMC-50 controller. Contact Rockwell Automation technical support for further guidance.
(2) For controllers with 24V DC control power, consult your local Rockwell Automation sale office or Allen-Bradley distributor for availability.
(3) Devices are not equipped with line and load terminal lugs. See page 76 for terminal lug kits.

Table 60 - 400/415/460V AC, 500/575V AC, and 690V AC SMC-50 Controllers with Internal Bypass for use with Line-connected Motors

Rated Voltage [V AC]	Motor Current [A][1]	Max. kW, 50 Hz	Max. Hp, 60 Hz	Control Power[2]	Cat. No.[3]
400/415 (kW) 460 (Hp)	27...108	55	75	100...240V AC, 50/60 Hz	150-S108NBD
				24V DC	150-S108NBR
	34...135	75	100	100...240V AC, 50/60 Hz	150-S135NBD
				24V DC	150-S135NBR
	67...201	110	150	100...240V AC, 50/60 Hz	150-S201NBD
				24V DC	150-S201NBR
	84...251	132	200	100...240V AC, 50/60 Hz	150-S251NBD
				24V DC	150-S251NBR
	106...317	160	250	100...240V AC, 50/60 Hz	150-S317NBD
				24V DC	150-S317NBR
	120...361	200	300	100...240V AC, 50/60 Hz	150-S361NBD
				24V DC	150-S361NBR
	160...480	250	400	100...240V AC, 50/60 Hz	150-S480NBD
				24V DC	150-S480NBR
500 (kW) 575 (Hp)	27...108	75	100	100...240V AC, 50/60 Hz	150-S108NUD
				24V DC	150-S108NUR
	34...135	90	125	100...240V AC, 50/60 Hz	150-S135NUD
				24V DC	150-S135NUR
	67...201	132	200	100...240V AC, 50/60 Hz	150-S201NUD
				24V DC	150-S201NUR
	84...251	160	250	100...240V AC, 50/60 Hz	150-S251NUD
				24V DC	150-S251NUR
	106...317	200	300	100...240V AC, 50/60 Hz	150-S317NUD
				24V DC	150-S317NUR
	120...361	250	350	100...240V AC, 50/60 Hz	150-S361NUD
				24V DC	150-S361NUR
	160...480	315	500	100...240V AC, 50/60 Hz	150-S480NUD
				24V DC	150-S480NUR
690/Y (kW)[4] 600 (Hp)	27...108	90	100	100...240V AC, 50/60 Hz	150-S108NUD
				24V DC	150-S108NUR
	34...135	132	175	100...240V AC, 50/60 Hz	150-S135NUD
				24V DC	150-S135NUR
	67...201	160	200	100...240V AC, 50/60 Hz	150-S201NUD
				24V DC	150-S201NUR
	84...251	200	250	100...240V AC, 50/60 Hz	150-S251NUD
				24V DC	150-S251NUR
	106...317	315	400	100...240V AC, 50/60 Hz	150-S317NUD
				24V DC	150-S317NUR
	120...361	355	450	100...240V AC, 50/60 Hz	150-S361NUD
				24V DC	150-S361NUR
	160...480	450	600	100...240V AC, 50/60 Hz	150-S480NUD
				24V DC	150-S480NUR

(1) Motor FLA rating must fall within specified current range for unit to operate properly. Special consideration should be given when using a motor with a potentially high starting current (greater than ten times motor FLA) with the SMC-50 controller. Contact Rockwell Automation technical support for further guidance.
(2) For controllers with 24V DC control power, consult your local Rockwell Automation sale office or Allen-Bradley distributor for availability.
(3) Devices are not equipped with line and load terminal lugs. See page 76 for terminal lug kits.
(4) To be used only in a Y-type system.

For Use with Delta-connected Motors

Utilization Category: AC-53b:3.0-50:1750. Start Not to Exceed: 300% of the controller maximum current rating, 50 second start time, two starts per hour with 50 °C (122 °F) surrounding air ambient temperature.

Use the SMC Estimation Wizard and SMC Thermal Estimation Wizard to confirm that the SMC controller selection meets the application requirements. See Sizing and Selection Tools for more information. For additional assistance, visit rok.auto or contact Industrial Controls Technical Support by email at raictechsupport@ra.rockwell.com or by phone at +1 440-646-5800.

Table 61 - 200/208V AC and 230V AC SMC-50 Controllers with Internal Bypass for use with Delta-connected Motors

Rated Voltage [V AC]	Motor Current [A](1)	Max. kW, 50 Hz	Max. Hp, 60 Hz	Control Power(2)	Cat. No.(3)
200/208	47...187	–	60	100...240V AC, 50/60 Hz	150-S108NBD
				24V DC	150-S108NBR
	59...234	–	75	100...240V AC, 50/60 Hz	150-S135NBD
				24V DC	150-S135NBR
	116...348	–	100	100...240V AC, 50/60 Hz	150-S201NBD
				24V DC	150-S201NBR
	145...435	–	150	100...240V AC, 50/60 Hz	150-S251NBD
				24V DC	150-S251NBR
	183...549	–	200	100...240V AC, 50/60 Hz	150-S317NBD
				24V DC	150-S317NBR
	208...625	–	200	100...240V AC, 50/60 Hz	150-S361NBD
				24V DC	150-S361NBR
	277...831	–	300	100...240V AC, 50/60 Hz	150-S480NBD
				24V DC	150-S480NBR
230	47...187	55	60	100...240V AC, 50/60 Hz	150-S108NBD
				24V DC	150-S108NBR
	59...234	75	75	100...240V AC, 50/60 Hz	150-S135NBD
				24V DC	150-S135NBR
	116...348	110	100	100...240V AC, 50/60 Hz	150-S201NBD
				24V DC	150-S201NBR
	145...435	132	150	100...240V AC, 50/60 Hz	150-S251NBD
				24V DC	150-S251NBR
	183...549	160	200	100...240V AC, 50/60 Hz	150-S317NBD
				24V DC	150-S317NBR
	208...625	200	200	100...240V AC, 50/60 Hz	150-S361NBD
				24V DC	150-S361NBR
	277...831	250	300	100...240V AC, 50/60 Hz	150-S480NBD
				24V DC	150-S480NBR

(1) Motor FLA rating must fall within specified current range for unit to operate properly. Special consideration should be given when using a motor with a potentially high starting current (greater than ten times motor FLA) with the SMC-50 controller. Contact Rockwell Automation technical support for further guidance.
(2) For controllers with 24V DC control power, consult your local Rockwell Automation sale office or Allen-Bradley distributor for availability.
(3) Devices are not equipped with line and load terminal lugs. See page 76 for terminal lug kits.

Table 62 - 400/415/460V AC and 500/575V AC SMC-50 Controllers with Internal Bypass for use with Delta-connected Motors

Rated Voltage [V AC]	Motor Current [A](1)	Max. kW, 50 Hz	Max. Hp, 60 Hz	Control Power(2)	Cat. No.(3)
400/415 (kW) 460 (Hp)	47...187	90	125	100...240V AC, 50/60 Hz	150-S108NBD
				24V DC	150-S108NBR
	59...234	132	150	100...240V AC, 50/60 Hz	150-S135NBD
				24V DC	150-S135NBR
	116...348	160	250	100...240V AC, 50/60 Hz	150-S201NBD
				24V DC	150-S201NBR
	145...435	250	350	100...240V AC, 50/60 Hz	150-S251NBD
				24V DC	150-S251NBR
	183...549	315	450	100...240V AC, 50/60 Hz	150-S317NBD
				24V DC	150-S317NBR
	208...625	355	500	100...240V AC, 50/60 Hz	150-S361NBD
				24V DC	150-S361NBR
	277...831	450	700	100...240V AC, 50/60 Hz	150-S480NBD
				24V DC	150-S480NBR
500 (kW) 575 (Hp)	47...187	132	150	100...240V AC, 50/60 Hz	150-S108NUD
				24V DC	150-S108NUR
	59...234	160	200	100...240V AC, 50/60 Hz	150-S135NUD
				24V DC	150-S135NUR
	116...348	250	350	100...240V AC, 50/60 Hz	150-S201NUD
				24V DC	150-S201NUR
	145...435	315	400	100...240V AC, 50/60 Hz	150-S251NUD
				24V DC	150-S251NUR
	183...549	400	500	100...240V AC, 50/60 Hz	150-S317NUD
				24V DC	150-S317NUR
	208...625	450	600	100...240V AC, 50/60 Hz	150-S361NUD
				24V DC	150-S361NUR
	277...831	560	900	100...240V AC, 50/60 Hz	150-S480NUD
				24V DC	150-S480NUR

(1) Motor FLA rating must fall within specified current range for unit to operate properly. Special consideration should be given when using a motor with a potentially high starting current (greater than ten times motor FLA) with the SMC-50 controller. Contact Rockwell Automation technical support for further guidance.
(2) For controllers with 24V DC control power, consult your local Rockwell Automation sale office or Allen-Bradley distributor for availability.
(3) Devices are not equipped with line and load terminal lugs. See page 76 for terminal lug kits.

Product Selection—SMC-50 Solid-state Controller

For Use with Line-connected Motors

Normal/Standard Duty Ratings (applications include pumps, compressors, elevators, and short conveyors)

Utilization Category: AC-53a:3.5-10:99-2. Start Not to Exceed: 350% of the controller maximum current rating, 10 second start time, 99% ON load factor, two starts per hour with 40 °C (104 °F) surrounding air ambient temperature.

Use the SMC Estimation Wizard and SMC Thermal Estimation Wizard to confirm that the SMC controller selection meets the application requirements. See Sizing and Selection Tools for more information. For additional assistance, visit rok.auto or contact Industrial Controls Technical Support by email at raictechsupport@ra.rockwell.com or by phone at +1 440-646-5800.

Table 63 - 200/208V AC SMC-50 Solid-state Controllers for Use with Line-connected Motors, Normal/Standard Duty

Rated Utilization Voltage [V AC]	Motor Current [A](1)	Motor kW, 50 Hz	Motor Hp, 60 Hz	Control Power	Cat. No.(2)
200/208	30…90	–	10…25	100…240V AC; 50/60 Hz	150-SB1NBD
				24V DC	150-SB1NBR
	37…110		15…30	100…240V AC; 50/60 Hz	150-SB2NBD
				24V DC	150-SB2NBR
	47…140		20…40	100…240V AC; 50/60 Hz	150-SB3NBD
				24V DC	150-SB3NBR
	60…180		25…60	100…240V AC; 50/60 Hz	150-SB4NBD
				24V DC	150-SB4NBR
	70…210		25…60	100…240V AC; 50/60 Hz	150-SC1NBD
				24V DC	150-SC1NBR
	87…260		30…75	100…240V AC; 50/60 Hz	150-SC2NBD
				24V DC	150-SC2NBR
	107…320		40…100	100…240V AC; 50/60 Hz	150-SC3NBD
				24V DC	150-SC3NBR
	120…361		50…125	100…240V AC; 50/60 Hz	150-SD1NBD
				24V DC	150-SD1NBR
	140…420		50…150	100…240V AC; 50/60 Hz	150-SD2NBD
				24V DC	150-SD2NBR
	174…520		75…150	100…240V AC; 50/60 Hz	150-SD3NBD
				24V DC	150-SD3NBR

(1) Motor FLA rating must fall within specified current range for unit to operate properly. Special consideration should be given when using a motor with a potentially high starting current (greater than ten times motor FLA) with the SMC-50 controller. Contact Rockwell Automation technical support for further guidance.
(2) Devices are not equipped with line and load terminal lugs. See page 76 for terminal lug kits.

Table 64 - 230V AC and 400/415/460V AC SMC-50 Solid-state Controllers for Use with Line-connected Motors, Normal/Standard Duty

Rated Utilization Voltage [V AC]	Motor Current [A](1)	Motor kW, 50 Hz	Motor Hp, 60 Hz	Control Power	Cat. No.(2)
230	30...90	10...25	15...30	100...240V AC; 50/60 Hz	150-SB1NBD
				24V DC	150-SB1NBR
	37...110	11...32	15...40	100...240V AC; 50/60 Hz	150-SB2NBD
				24V DC	150-SB2NBR
	47...140	15...45	20...50	100...240V AC; 50/60 Hz	150-SB3NBD
				24V DC	150-SB3NBR
	60...180	18.5...55	25...60	100...240V AC; 50/60 Hz	150-SB4NBD
				24V DC	150-SB4NBR
	70...210	22...63	30...75	100...240V AC; 50/60 Hz	150-SC1NBD
				24V DC	150-SC1NBR
	87...260	30...80	40...100	100...240V AC; 50/60 Hz	150-SC2NBD
				24V DC	150-SC2NBR
	107...320	37...100	50...125	100...240V AC; 50/60 Hz	150-SC3NBD
				24V DC	150-SC3NBR
	120...361	40...110	50...150	100...240V AC; 50/60 Hz	150-SD1NBD
				24V DC	150-SD1NBR
	140...420	45...132	60...150	100...240V AC; 50/60 Hz	150-SD2NBD
				24V DC	150-SD2NBR
	174...520	63...160	75...200	100...240V AC; 50/60 Hz	150-SD3NBD
				24V DC	150-SD3NBR
400/415 (kW) 460 (Hp)	30...90	17...50	25...60	100...240V AC; 50/60 Hz	150-SB1NBD
				24V DC	150-SB1NBR
	37...110	20...55	30...75	100...240V AC; 50/60 Hz	150-SB2NBD
				24V DC	150-SB2NBR
	47...140	30...75	40...100	100...240V AC; 50/60 Hz	150-SB3NBD
				24V DC	150-SB3NBR
	60...180	37...90	50...150	100...240V AC; 50/60 Hz	150-SB4NBD
				24V DC	150-SB4NBR
	70...210	40...110	60...150	100...240V AC; 50/60 Hz	150-SC1NBD
				24V DC	150-SC1NBR
	87...260	50...132	75...200	100...240V AC; 50/60 Hz	150-SC2NBD
				24V DC	150-SC2NBR
	107...320	63...160	100...250	100...240V AC; 50/60 Hz	150-SC3NBD
				24V DC	150-SC3NBR
	120...361	75...200	100...300	100...240V AC; 50/60 Hz	150-SD1NBD
				24V DC	150-SD1NBR
	140...420	80...220	125...350	100...240V AC; 50/60 Hz	150-SD2NBD
				24V DC	150-SD2NBR
	174...520	100...300	150...450	100...240V AC; 50/60 Hz	150-SD3NBD
				24V DC	150-SD3NBR

(1) Motor FLA rating must fall within specified current range for unit to operate properly. Special consideration should be given when using a motor with a potentially high starting current (greater than ten times motor FLA) with the SMC-50 controller. Contact Rockwell Automation technical support for further guidance.
(2) Devices are not equipped with line and load terminal lugs. See page 76 for terminal lug kits.

Table 65 - 500/575V AC and 690V AC SMC-50 Solid-state Controllers for Use with Line-connected Motors, Normal/Standard Duty

Rated Utilization Voltage [V AC]	Motor Current [A](1)	Motor kW, 50 Hz	Motor Hp, 60 Hz	Control Power	Cat. No.(2)
500 (kW) 575 (Hp)	30...90	20...63	30...75	100...240V AC; 50/60 Hz	150-SB1NUD
				24V DC	150-SB1NUR
	37...110	25...75	40...100	100...240V AC; 50/60 Hz	150-SB2NUD
				24V DC	150-SB2NUR
	47...140	32...90	50...125	100...240V AC; 50/60 Hz	150-SB3NUD
				24V DC	150-SB3NUR
	60...180	45...125	60...150	100...240V AC; 50/60 Hz	150-SB4NUD
				24V DC	150-SB4NUR
	70...210	50...150	75...200	100...240V AC; 50/60 Hz	150-SC1NUD
				24V DC	150-SC1NUR
	87...260	63...185	100...250	100...240V AC; 50/60 Hz	150-SC2NUD
				24V DC	150-SC2NUR
	107...320	75...220	125...300	100...240V AC; 50/60 Hz	150-SC3NUD
				24V DC	150-SC3NUR
	120...361	90...250	125...350	100...240V AC; 50/60 Hz	150-SD1NUD
				24V DC	150-SD1NUR
	140...420	100...300	150...450	100...240V AC; 50/60 Hz	150-SD2NUD
				24V DC	150-SD2NUR
	174...520	125...375	200...500	100...240V AC; 50/60 Hz	150-SD3NUD
				24V DC	150-SD3NUR
690/Y (kW)(3) 600 (Hp)	30...90	30...80	30...75	100...240V AC; 50/60 Hz	150-SB1NUD
				24V DC	150-SB1NUR
	37...110	37...100	40...100	100...240V AC; 50/60 Hz	150-SB2NUD
				24V DC	150-SB2NUR
	47...140	45...132	50...125	100...240V AC; 50/60 Hz	150-SB3NUD
				24V DC	150-SB3NUR
	60...180	63...160	60...150	100...240V AC; 50/60 Hz	150-SB4NUD
				24V DC	150-SB4NUR
	70...210	75...200	75...200	100...240V AC; 50/60 Hz	150-SC1NUD
				24V DC	150-SC1NUR
	87...260	90...250	100...250	100...240V AC; 50/60 Hz	150-SC2NUD
				24V DC	150-SC2NUR
	107...320	110...315	125...300	100...240V AC; 50/60 Hz	150-SC3NUD
				24V DC	150-SC3NUR
	120...361	125...355	125...350	100...240V AC; 50/60 Hz	150-SD1NUD
				24V DC	150-SD1NUR
	140...420	160...400	150...450	100...240V AC; 50/60 Hz	150-SD2NUD
				24V DC	150-SD2NUR
	174...520	185...500	200...500	100...240V AC; 50/60 Hz	150-SD3NUD
				24V DC	150-SD3NUR

(1) Motor FLA rating must fall within specified current range for unit to operate properly. Special consideration should be given when using a motor with a potentially high starting current (greater than ten times motor FLA) with the SMC-50 controller. Contact Rockwell Automation technical support for further guidance.
(2) Devices are not equipped with line and load terminal lugs. See page 76 for terminal lug kits.
(3) To be used only in a Y-type system.

Heavy-duty Ratings (applications include centrifugal fans, crushers, mixers, and long conveyors)

Utilization Category: AC-53a:3.5-30:99-1. Start Not to Exceed: 350% of the controller maximum current rating, 30 second start time, 99% ON load factor, one start per hour with 50 °C (122 °F) surrounding air ambient temperature.

Use the SMC Estimation Wizard and SMC Thermal Estimation Wizard to confirm that the SMC controller selection meets the application requirements. See Sizing and Selection Tools for more information. For additional assistance, visit rok.auto or contact Industrial Controls Technical Support by email at raictechsupport@ra.rockwell.com or by phone at +1 440-646-5800.

Table 66 - 200/208V AC and 230V AC SMC-50 Solid-state Controllers for Use with Line-connected Motors, Heavy Duty

Rated Utilization Voltage [V AC]	Motor Current [A](1)	Motor kW, 50 Hz	Motor Hp, 60 Hz	Control Power	Cat. No.(2)
200/208	30...90	–	10...25	100...240V AC; 50/60 Hz	150-SB2NBD
				24V DC	150-SB2NBR
	37...110		15...30	100...240V AC; 50/60 Hz	150-SB3NBD
				24V DC	150-SB3NBR
	47...140		20...40	100...240V AC; 50/60 Hz	150-SB4NBD
				24V DC	150-SB4NBR
	60...180		25...60	100...240V AC; 50/60 Hz	150-SC1NBD
				24V DC	150-SC1NBR
	70...210		25...60	100...240V AC; 50/60 Hz	150-SC2NBD
				24V DC	150-SC2NBR
	87...260		30...75	100...240V AC; 50/60 Hz	150-SC3NBD
				24V DC	150-SC3NBR
	107...320		40...100	100...240V AC; 50/60 Hz	150-SD1NBD
				24V DC	150-SD1NBR
	120...361		50...125	100...240V AC; 50/60 Hz	150-SD2NBD
				24V DC	150-SD2NBR
	140...420		50...150	100...240V AC; 50/60 Hz	150-SD3NBD
				24V DC	150-SD3NBR
230	30...90	10...25	15...30	100...240V AC; 50/60 Hz	150-SB2NBD
				24V DC	150-SB2NBR
	37...110	11...32	15...40	100...240V AC; 50/60 Hz	150-SB3NBD
				24V DC	150-SB3NBR
	47...140	15...45	20...50	100...240V AC; 50/60 Hz	150-SB4NBD
				24V DC	150-SB4NBR
	60...180	18.5...55	25...60	100...240V AC; 50/60 Hz	150-SC1NBD
				24V DC	150-SC1NBR
	70...210	22...63	30...75	100...240V AC; 50/60 Hz	150-SC2NBD
				24V DC	150-SC2NBR
	87...260	30...80	40...100	100...240V AC; 50/60 Hz	150-SC3NBD
				24V DC	150-SC3NBR
	107...320	37...100	50...125	100...240V AC; 50/60 Hz	150-SD1NBD
				24V DC	150-SD1NBR
	120...361	40...110	50...150	100...240V AC; 50/60 Hz	150-SD2NBD
				24V DC	150-SD2NBR
	140...420	45...132	60...150	100...240V AC; 50/60 Hz	150-SD3NBD
				24V DC	150-SD3NBR

(1) Motor FLA rating must fall within specified current range for unit to operate properly. Special consideration should be given when using a motor with a potentially high starting current (greater than ten times motor FLA) with the SMC-50 controller. Contact Rockwell Automation technical support for further guidance.
(2) Devices are not equipped with line and load terminal lugs. See page 76 for terminal lug kits.

Table 67 - 400/415/460V AC and 500/575V AC SMC-50 Solid-state Controllers for Use with Line-connected Motors, Heavy Duty

Rated Utilization Voltage [V AC]	Motor Current [A](1)	Motor kW, 50 Hz	Motor Hp, 60 Hz	Control Power	Cat. No.(2)
400/415 (kW) 460 (Hp)	30…90	17…50	25…60	100…240V AC; 50/60 Hz	150-SB2NBD
				24V DC	150-SB2NBR
	37…110	20…55	30…75	100…240V AC; 50/60 Hz	150-SB3NBD
				24V DC	150-SB3NBR
	47…140	30…75	40…100	100…240V AC; 50/60 Hz	150-SB4NBD
				24V DC	150-SB4NBR
	60…180	37…90	50…150	100…240V AC; 50/60 Hz	150-SC1NBD
				24V DC	150-SC1NBR
	70…210	40…110	60…150	100…240V AC; 50/60 Hz	150-SC2NBD
				24V DC	150-SC2NBR
	87…260	50…132	75…200	100…240V AC; 50/60 Hz	150-SC3NBD
				24V DC	150-SC3NBR
	107…320	63…160	100…250	100…240V AC; 50/60 Hz	150-SD1NBD
				24V DC	150-SD1NBR
	120…361	75…200	100…300	100…240V AC; 50/60 Hz	150-SD2NBD
				24V DC	150-SD2NBR
	140…420	80…220	125…350	100…240V AC; 50/60 Hz	150-SD3NBD
				24V DC	150-SD3NBR
500 (kW) 575 (Hp)	30…90	20…63	30…75	100…240V AC; 50/60 Hz	150-SB2NUD
				24V DC	150-SB2NUR
	37…110	25…75	40…100	100…240V AC; 50/60 Hz	150-SB3NUD
				24V DC	150-SB3NUR
	47…140	32…90	50…125	100…240V AC; 50/60 Hz	150-SB4NUD
				24V DC	150-SB4NUR
	60…180	45…125	60…150	100…240V AC; 50/60 Hz	150-SC1NUD
				24V DC	150-SC1NUR
	70…210	50…150	75…200	100…240V AC; 50/60 Hz	150-SC2NUD
				24V DC	150-SC2NUR
	87…260	63…185	100…250	100…240V AC; 50/60 Hz	150-SC3NUD
				24V DC	150-SC3NUR
	107…320	75…220	125…300	100…240V AC; 50/60 Hz	150-SD1NUD
				24V DC	150-SD1NUR
	120…361	90…250	125…350	100…240V AC; 50/60 Hz	150-SD2NUD
				24V DC	150-SD2NUR
	140…420	100…300	150…450	100…240V AC; 50/60 Hz	150-SD3NUD
				24V DC	150-SD3NUR

(1) Motor FLA rating must fall within specified current range for unit to operate properly. Special consideration should be given when using a motor with a potentially high starting current (greater than ten times motor FLA) with the SMC-50 controller. Contact Rockwell Automation technical support for further guidance.
(2) Devices are not equipped with line and load terminal lugs. See page 76 for terminal lug kits.

Table 68 - 690V AC SMC-50 Solid-state Controllers for Use with Line-connected Motors, Heavy Duty

Rated Utilization Voltage [V AC]	Motor Current [A](1)	Motor kW, 50 Hz	Motor Hp, 60 Hz	Control Power	Cat. No.(2)
690/Y (kW)(3) 600 (Hp)	30...90	30...80	30...75	100...240V AC; 50/60 Hz	150-SB2NUD
				24V DC	150-SB2NUR
	37...110	37...100	40...100	100...240V AC; 50/60 Hz	150-SB3NUD
				24V DC	150-SB3NUR
	47...140	45...132	50...125	100...240V AC; 50/60 Hz	150-SB4NUD
				24V DC	150-SB4NUR
	60...180	63...160	60...150	100...240V AC; 50/60 Hz	150-SC1NUD
				24V DC	150-SC1NUR
	70...210	75...200	75...200	100...240V AC; 50/60 Hz	150-SC2NUD
				24V DC	150-SC2NUR
	87...260	90...250	100...250	100...240V AC; 50/60 Hz	150-SC3NUD
				24V DC	150-SC3NUR
	107...320	110...315	125...300	100...240V AC; 50/60 Hz	150-SD1NUD
				24V DC	150-SD1NUR
	120...361	125...355	125...350	100...240V AC; 50/60 Hz	150-SD2NUD
				24V DC	150-SD2NUR
	140...420	160...400	150...450	100...240V AC; 50/60 Hz	150-SD3NUD
				24V DC	150-SD3NUR

(1) Motor FLA rating must fall within specified current range for unit to operate properly. Special consideration should be given when using a motor with a potentially high starting current (greater than ten times motor FLA) with the SMC-50 controller. Contact Rockwell Automation technical support for further guidance.
(2) Devices are not equipped with line and load terminal lugs. See page 76 for terminal lug kits.
(3) To be used only in a Y-type system.

For Use with Delta-connected Motors

Normal/Standard Duty Ratings (applications include pumps, compressors, elevators, and short conveyors)

Utilization Category: AC-53a:3.5-10:99-2. Start Not to Exceed: 350% of the controller maximum current rating, 10 second start time, 99% ON load factor, two starts per hour with 40 °C (104 °F) surrounding air ambient temperature.

Use the SMC Estimation Wizard and SMC Thermal Estimation Wizard to confirm that the SMC controller selection meets the application requirements. See Sizing and Selection Tools for more information. For additional assistance, visit rok.auto or contact Industrial Controls Technical Support by email at raictechsupport@ra.rockwell.com or by phone at +1 440-646-5800.

Table 69 - 200/208V AC and 230V AC SMC-50 Solid-state Controllers for Use with Delta-connected Motors, Normal/Standard Duty

Rated Utilization Voltage [V AC]	Motor Current [A](1)	Motor kW, 50 Hz	Motor Hp, 60 Hz	Control Power	Cat. No.(2)
200/208	52...155	–	20...50	100...240V AC; 50/60 Hz	150-SB1NBD
				24V DC	150-SB1NBR
	65...190		25...60	100...240V AC; 50/60 Hz	150-SB2NBD
				24V DC	150-SB2NBR
	82...242		30...75	100...240V AC; 50/60 Hz	150-SB3NBD
				24V DC	150-SB3NBR
	104...311		40...100	100...240V AC; 50/60 Hz	150-SB4NBD
				24V DC	150-SB4NBR
	122...363		50...125	100...240V AC; 50/60 Hz	150-SC1NBD
				24V DC	150-SC1NBR
	151...450		60...150	100...240V AC; 50/60 Hz	150-SC2NBD
				24V DC	150-SC2NBR
	186...554		75...200	100...240V AC; 50/60 Hz	150-SC3NBD
				24V DC	150-SC3NBR
	210...625		75...200	100...240V AC; 50/60 Hz	150-SD1NBD
				24V DC	150-SD1NBR
	243...727		100...250	100...240V AC; 50/60 Hz	150-SD2NBD
				24V DC	150-SD2NBR
	302...900		125...300	100...240V AC; 50/60 Hz	150-SD3NBD
				24V DC	150-SD3NBR
230	52...155	17...50	20...60	100...240V AC; 50/60 Hz	150-SB1NBD
				24V DC	150-SB1NBR
	65...190	20...55	25...60	100...240V AC; 50/60 Hz	150-SB2NBD
				24V DC	150-SB2NBR
	82...242	30...75	40...75	100...240V AC; 50/60 Hz	150-SB3NBD
				24V DC	150-SB3NBR
	104...311	37...100	40...100	100...240V AC; 50/60 Hz	150-SB4NBD
				24V DC	150-SB4NBR
	122...363	40...110	50...125	100...240V AC; 50/60 Hz	150-SC1NBD
				24V DC	150-SC1NBR
	151...450	50...132	60...150	100...240V AC; 50/60 Hz	150-SC2NBD
				24V DC	150-SC2NBR
	186...554	63...160	75...200	100...240V AC; 50/60 Hz	150-SC3NBD
				24V DC	150-SC3NBR
	210...625	75...200	100...250	100...240V AC; 50/60 Hz	150-SD1NBD
				24V DC	150-SD1NBR
	243...727	80...220	100...300	100...240V AC; 50/60 Hz	150-SD2NBD
				24V DC	150-SD2NBR
	302...900	100...300	125...350	100...240V AC; 50/60 Hz	150-SD3NBD
				24V DC	150-SD3NBR

(1) Motor FLA rating must fall within specified current range for unit to operate properly. Special consideration should be given when using a motor with a potentially high starting current (greater than ten times motor FLA) with the SMC-50 controller. Contact Rockwell Automation technical support for further guidance.
(2) Devices are not equipped with line and load terminal lugs. See page 76 for terminal lug kits.

Table 70 - 400/415/460V AC and 500/575V AC SMC-50 Solid-state Controllers for Use with Delta-connected Motors, Normal/Standard Duty

Rated Utilization Voltage [V AC]	Motor Current [A](1)	Motor kW, 50 Hz	Motor Hp, 60 Hz	Control Power	Cat. No.(2)
400/415 (kW) 460 (Hp)	52...155	30...80	40...100	100...240V AC; 50/60 Hz	150-SB1NBD
				24V DC	150-SB1NBR
	65...190	37...100	50...150	100...240V AC; 50/60 Hz	150-SB2NBD
				24V DC	150-SB2NBR
	82...242	50...132	75...200	100...240V AC; 50/60 Hz	150-SB3NBD
				24V DC	150-SB3NBR
	104...311	63...160	100...250	100...240V AC; 50/60 Hz	150-SB4NBD
				24V DC	150-SB4NBR
	122...363	75...200	100...300	100...240V AC; 50/60 Hz	150-SC1NBD
				24V DC	150-SC1NBR
	151...450	90...250	125...350	100...240V AC; 50/60 Hz	150-SC2NBD
				24V DC	150-SC2NBR
	186...554	110...315	200...450	100...240V AC; 50/60 Hz	150-SC3NBD
				24V DC	150-SC3NBR
	210...625	125...355	200...500	100...240V AC; 50/60 Hz	150-SD1NBD
				24V DC	150-SD1NBR
	243...727	150...400	250...600	100...240V AC; 50/60 Hz	150-SD2NBD
				24V DC	150-SD2NBR
	302...900	185...530	250...700	100...240V AC; 50/60 Hz	150-SD3NBD
				24V DC	150-SD3NBR
500 (kW) 575 (Hp)	52...155	37...100	50...150	100...240V AC; 50/60 Hz	150-SB1NUD
				24V DC	150-SB1NUR
	65...190	50...132	75...150	100...240V AC; 50/60 Hz	150-SB2NUD
				24V DC	150-SB2NUR
	82...242	63...160	100...250	100...240V AC; 50/60 Hz	150-SB3NUD
				24V DC	150-SB3NUR
	104...311	75...220	125...300	100...240V AC; 50/60 Hz	150-SB4NUD
				24V DC	150-SB4NUR
	122...363	90...250	125...350	100...240V AC; 50/60 Hz	150-SC1NUD
				24V DC	150-SC1NUR
	151...450	110...315	200...450	100...240V AC; 50/60 Hz	150-SC2NUD
				24V DC	150-SC2NUR
	186...554	132...400	200...500	100...240V AC; 50/60 Hz	150-SC3NUD
				24V DC	150-SC3NUR
	210...625	150...450	250...600	100...240V AC; 50/60 Hz	150-SD1NUD
				24V DC	150-SD1NUR
	243...727	185...530	300...700	100...240V AC; 50/60 Hz	150-SD2NUD
				24V DC	150-SD2NUR
	302...900	220...670	350...900	100...240V AC; 50/60 Hz	150-SD3NUD
				24V DC	150-SD3NUR

(1) Motor FLA rating must fall within specified current range for unit to operate properly. Special consideration should be given when using a motor with a potentially high starting current (greater than ten times motor FLA) with the SMC-50 controller. Contact Rockwell Automation technical support for further guidance.
(2) Devices are not equipped with line and load terminal lugs. See page 76 for terminal lug kits.

Heavy-duty Ratings (applications include centrifugal fans, crushers, mixers, and long conveyors)

Utilization Category: AC-53a:3.5-30:99-1. Start Not to Exceed: 350% of the controller maximum current rating, 30 second start time, 99% ON load factor, one start per hour with 50 °C (122 °F) surrounding air ambient temperature.

Use the SMC Estimation Wizard and SMC Thermal Estimation Wizard to confirm that the SMC controller selection meets the application requirements. See Sizing and Selection Tools for more information. For additional assistance, visit rok.auto or contact Industrial Controls Technical Support by email at raictechsupport@ra.rockwell.com or by phone at +1 440-646-5800.

Table 71 - 200/208V AC and 230V AC SMC-50 Solid-state Controllers for Use with Delta-connected Motors, Heavy Duty

Rated Utilization Voltage [V AC]	Motor Current [A](1)	Motor kW, 50 Hz	Motor Hp, 60 Hz	Control Power	Cat. No.(2)
200/208	52...155	—	20...50	100...240V AC; 50/60 Hz	150-SB2NBD
				24V DC	150-SB2NBR
	65...190		25...60	100...240V AC; 50/60 Hz	150-SB3NBD
				24V DC	150-SB3NBR
	82...242		30...75	100...240V AC; 50/60 Hz	150-SB4NBD
				24V DC	150-SB4NBR
	104...311		40...100	100...240V AC; 50/60 Hz	150-SC1NBD
				24V DC	150-SC1NBR
	122...363		50...125	100...240V AC; 50/60 Hz	150-SC2NBD
				24V DC	150-SC2NBR
	151...450		60...150	100...240V AC; 50/60 Hz	150-SC3NBD
				24V DC	150-SC3NBR
	186...554		75...200	100...240V AC; 50/60 Hz	150-SD1NBD
				24V DC	150-SD1NBR
	210...625		75...200	100...240V AC; 50/60 Hz	150-SD2NBD
				24V DC	150-SD2NBR
	243...727		100...250	100...240V AC; 50/60 Hz	150-SD3NBD
				24V DC	150-SD3NBR
230	52...155	17...50	20...60	100...240V AC; 50/60 Hz	150-SB2NBD
				24V DC	150-SB2NBR
	65...190	20...55	25...60	100...240V AC; 50/60 Hz	150-SB3NBD
				24V DC	150-SB3NBR
	82...242	30...75	40...75	100...240V AC; 50/60 Hz	150-SB4NBD
				24V DC	150-SB4NBR
	104...311	37...100	40...100	100...240V AC; 50/60 Hz	150-SC1NBD
				24V DC	150-SC1NBR
	122...363	40...110	50...125	100...240V AC; 50/60 Hz	150-SC2NBD
				24V DC	150-SC2NBR
	151...450	50...132	60...150	100...240V AC; 50/60 Hz	150-SC3NBD
				24V DC	150-SC3NBR
	186...554	63...160	75...200	100...240V AC; 50/60 Hz	150-SD1NBD
				24V DC	150-SD1NBR
	210...625	75...200	100...250	100...240V AC; 50/60 Hz	150-SD2NBD
				24V DC	150-SD2NBR
	243...727	80...220	100...300	100...240V AC; 50/60 Hz	150-SD3NBD
				24V DC	150-SD3NBR

(1) Motor FLA rating must fall within specified current range for unit to operate properly. Special consideration should be given when using a motor with a potentially high starting current (greater than ten times motor FLA) with the SMC-50 controller. Contact Rockwell Automation technical support for further guidance.
(2) Devices are not equipped with line and load terminal lugs. See page 76 for terminal lug kits.

Table 72 - 400/415/460V AC and 500/575V AC SMC-50 Solid-state Controllers for Use with Delta-connected Motors, Heavy Duty

Rated Utilization Voltage [V AC]	Motor Current [A](1)	Motor kW, 50 Hz	Motor Hp, 60 Hz	Control Power	Cat. No.(2)
400/415 (kW) 460 (Hp)	52…155	30…80	40…100	100…240V AC; 50/60 Hz	150-SB2NBD
				24V DC	150-SB2NBR
	65…190	37…100	50…150	100…240V AC; 50/60 Hz	150-SB3NBD
				24V DC	150-SB3NBR
	82…242	50…132	75…200	100…240V AC; 50/60 Hz	150-SB4NBD
				24V DC	150-SB4NBR
	104…311	63…160	100…250	100…240V AC; 50/60 Hz	150-SC1NBD
				24V DC	150-SC1NBR
	122…363	75…200	100…300	100…240V AC; 50/60 Hz	150-SC2NBD
				24V DC	150-SC2NBR
	151…450	90…250	125…350	100…240V AC; 50/60 Hz	150-SC3NBD
				24V DC	150-SC3NBR
	186…554	110…315	200…450	100…240V AC; 50/60 Hz	150-SD1NBD
				24V DC	150-SD1NBR
	210…625	125…355	200…500	100…240V AC; 50/60 Hz	150-SD2NBD
				24V DC	150-SD2NBR
	243…727	150…400	250…600	100…240V AC; 50/60 Hz	150-SD3NBD
				24V DC	150-SD3NBR
500 (kW) 575 (Hp)	52…155	37…100	50…150	100…240V AC; 50/60 Hz	150-SB2NUD
				24V DC	150-SB2NUR
	65…190	50…132	75…150	100…240V AC; 50/60 Hz	150-SB3NUD
				24V DC	150-SB3NUR
	82…242	63…160	100…250	100…240V AC; 50/60 Hz	150-SB4NUD
				24V DC	150-SB4NUR
	104…311	75…220	125…300	100…240V AC; 50/60 Hz	150-SC1NUD
				24V DC	150-SC1NUR
	122…363	90…250	125…350	100…240V AC; 50/60 Hz	150-SC2NUD
				24V DC	150-SC2NUR
	151…450	110…315	200…450	100…240V AC; 50/60 Hz	150-SC3NUD
				24V DC	150-SC3NUR
	186…554	132…400	200…500	100…240V AC; 50/60 Hz	150-SD1NUD
				24V DC	150-SD1NUR
	210…625	150…450	250…600	100…240V AC; 50/60 Hz	150-SD2NUD
				24V DC	150-SD2NUR
	243…727	185…530	300…700	100…240V AC; 50/60 Hz	150-SD3NUD
				24V DC	150-SD3NUR

(1) Motor FLA rating must fall within specified current range for unit to operate properly. Special consideration should be given when using a motor with a potentially high starting current (greater than ten times motor FLA) with the SMC-50 controller. Contact Rockwell Automation technical support for further guidance.
(2) Devices are not equipped with line and load terminal lugs. See page 76 for terminal lug kits.

Accessories

Table 73 - Option Modules

Description			Compatible Control Module Ports	Maximum No. of Option Modules of this Type Per Controller	Cat. No.
	Option Module • Adds or expands the functionality of the SMC-50 control module	PTC, Ground Fault, and Current Feedback Option Module	7 and 8	1	150-SM2
		Analog I/O Option Module • 2 analog inputs (voltage or current) • 2 analog outputs (voltage or current)	7, 8, 9	3	150-SM3
		Digital I/O Option Module • 4 100...240V AC inputs • 3 relay outputs	7, 8, 9	3	150-SM4
		Parameter Configuration Module • DIP and rotary dial	7, 8, 9	1	150-SM6

If the application requires network communication, a Cat. No. 20-COMM-X communication adapter must be inserted in expansion port 9.

Table 74 - Converter Modules

Description		For Use With	Rated Current [A]	Cat. No.
	Core Balance Ground Fault Sensor	Used with a Cat. No. 150-SM2 to provide ground current feedback.(1)	Turns Ratio: 100:1	825-CBCT

(1) The ground fault sensing feature of the SMC-50 controller is intended for monitoring purposes only. It is not to be used as a ground fault circuit interrupter for personnel protection as defined by Article 100 of the NEC. The sensing feature has not been evaluated to UL 1053.

Table 75 - Protective Modules

	Description		Current Rating [A]	Cat. No.
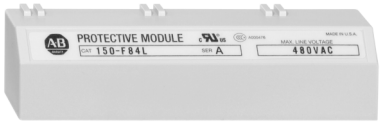	Protective module • Line- or load-side mounting	480V	90...520 108...480	150-F84L
		600V		150-F86L

Use of protective modules is highly recommended. For applications that require both line and load side protection, you must order two protective modules.

Table 76 - Terminal Lug Kits

	For Use With Controller Type		Current Range [A]	Wire Size Range	Total No. of Terminal Lugs Possible Each Side		Pkg. Qty.	Cat. No.
					Line Side	Load Side		
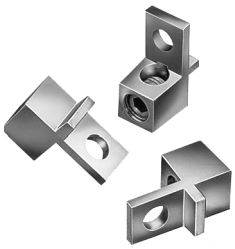	Integrated bypass	150-S108... , 150-S135...	108...135	#6...250 MCM AWG 16 mm^2...120 mm^2	3	3	3	199-LF1
		150-S201..., 150-S251...	201...251	#6...250 MCM AWG 16 mm^2...120 mm^2	6	6	3	199-LF1
		150-S317..., 150-S361..., 150-S480...	317...480	#4...500 MCM AWG 25 mm^2...240 mm^2	6	6	3	199-LG1
	Solid -state • no external bypass	150-SB...	90...180	#6...250 MCM AWG 16 mm^2...120 mm^2	3	3	3	199-LF1
		150-SC...	210...320	#6...250 MCM AWG 16 mm^2...120 mm^2	6	6	3	199-LF1
		150-SD...	361...520	#4...500 MCM AWG 25 mm^2...240 mm^2	6	6	3	199-LG1
	Solid -state • with external bypass	150-SB...	90...180	(2) 1/0...250 MCM AWG 50 mm^2...120 mm^2	3	3	3	1494R-N14
		150-SC...	210...320	#6...250 MCM AWG 16 mm^2...120 mm^2	6 (1)	6	3	199-LF1
		150-SD...	361...520	#4...500 MCM AWG 25 mm^2...240 mm^2	6(1)	6	3	199-LG1
	Integrated bypass • inside-the-delta terminal lugs	150-S108..., 150-S135...	187...234	#4...500 MCM AWG 25 mm^2...240mm^2		6(2)	3	1494R-N15
		150-S201..., 150-S251...	348...435	(2) 1/0...250 MCM AWG 50 mm^2...120 mm^2	6	12(2)	3	1494R-N14
		150-S317... , 150-S361..., 150-S480...	549...831	(3) 3/0...500 MCM AWG 95 mm^2...240 mm^2	3	12(3)	3	150-LG5MC

(1) 6 additional terminal lugs are needed for bypass kit
(2) When connected in an inside-the-delta configuration, use terminal Cat. No. 199-LF1 for load-side connections (T1...T6).
(3) When connected in an inside-the-delta configuration, use terminals Cat. No. 199-LG1 for load-side connections (T1...T6).

Table 77 - Distribution Blocks

	For Use With Controller Type		Current Range [A]	Wire Size Range		Total Distribution Blocks Needed		Pkg. Qty.	Cat. No.
				Line Side	Load Side	Line Side	Load Side		
	Solid-state • inside-the-delta	150-SB...	155...311	(2) #4 AWG...500 MCM 25...240 mm^2	(2) #4 AWG...500 MCM 25...240 mm^2	3	–	1	1492-BG
		150-SC...	363...554	(2) 1/0 AWG...750 MCM 54...400 mm^2	(6) 6 AWG...250 MCM 16...120 mm^2	1	–	1	Marathon Special Products Cat. No. 1353703
		150-SD...	625...900	(4) 1/0 AWG...750 MCM 54...400 mm^2	(4) 1/0 AWG...750 MCM 54...400 mm^2	3	–	1	Marathon Special Products Cat. No. 1352702

Table 78 - External Bypass Kits

For Use With Controller Type		Current Range [A]	Cat. No.
Solid -state • with external bypass	150-SC...	210...320	150-SCBK
	150-SD...	361...520	150-SDBK

Table 79 - IEC Line- or Load-side Terminal Covers

	Description	For Use With	Pkg. Quantity	Cat. No.
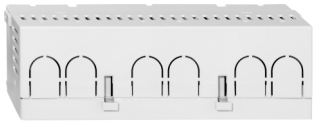	• Dead front protection • IP2X finger safe when used with 250 MCM cable	150-S108..., 150-S135...	1	150-TC1
	• Dead front protection • IP2X finger safe when used with 250 MCM cable	150-S201..., 150-S251...	1	150-TC2
	• Dead front protection • IP2X finger safe when used with 500 MCM cable	150-S317..., 150-S361..., 150-S480...	1	150-TC3
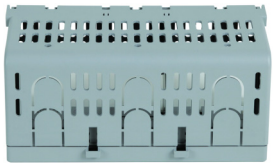	• Dead front protection • IP2X finger safe when used with 250 MCM cable	150-SB... (90...180 A units only)	1	150-STCB

Table 80 - Capacitor Module

	Description	For Use With	Cat. No.
	Required for EMC directive compliance (EN60947-4-2)	150-SB... (90...180 A units only)	150-SMCAP

Table 81 - Human Interface Modules (HIMs) and Communication Modules

Description				Cat. No.
	SMC-50 Controller — bezel mounted	Enhanced, LCD, Full Numeric Keypad		20-HIM-A6
	Door-mounted HIM	Remote (panel mount) LCD Display, Full Numeric Keypad (version of Cat. No. 20-HIM-A6)		20-HIM-C6S(1)
	HIM interface cables	HIM Interface Cable, 1 m (39 in)		20-HIM-H10(2)
		Cable Kit (Male-Female) 0.33 m (1.1 ft)		1202-H03
		Cable Kit (Male-Female) 1 m (3.3 ft)		1202-H10
		Cable Kit (Male-Female) 3 m (9.8 ft)		1202-H30
		Cable Kit (Male-Female) 9 m (29.5 ft)		1202-H90
		DPI/SCANport™ One to Two Port Splitter Cable		1203-S03
Description			**For Use With**	
	Communication modules (installed into the physical space assigned to control module expansion port 9; connected to DPI port 4 via cable)	RS-485 DF1 Communication Adapter	Bulletin 150-Sxx	20-COMM-S
		PROFIBUS DP Communication Adapter		20-COMM-P
		ControlNet® Communication Adapter (Coax)		20-COMM-C
		Interbus Communication Adapter		20-COMM-I
		Modbus/TCP Communication Adapter		20-COMM-M
		DeviceNet® Communication Adapter		20-COMM-D
		EtherNet/IP Communication Adapter		20-COMM-E
		Dual-port EtherNet/IP Communication Adapter		20-COMM-ER
		HVAC Communication Adapter		20-COMM-H
		ControlNet Communication Adapter (Fiber)		20-COMM-Q
Connected Components Workbench Software		Programming Software	Windows 7/2000/XP/Vista Windows 10(3)	Available for download at rok.auto/ccw
DriveExecutive				9303-4DTE01ENE
DriveTools SP (4)				9303-4DTS01ENE
AnaCANda RS-232 to DPI		Personal computer Interface	Serial	1203-SSS(5)
DPI to USB			USB	1203-USB(6)

(1) A 3 m (9.8 ft.) Cat. No. 1202-C30 cable is provided.
(2) A cable is required if 20-HIM-A6 is connected to the SMC-50 DPI Port #2 and used as a hand-held device.
(3) Connected Components Workbench software only.
(4) Includes DriveExecutive and DriveObserver software.
(5) Includes Cat. No. 1203-SFC and 1202-C10 cables.
(6) Includes Cat. No. 20-HIM-H10 and 22-HIM-H10 cables.

Replacement Parts

For All Controller Types

Table 82 - Replacement parts for all controllers

Description			Cat. No.
SMC-50 Control Module	100...240V AC control power; two 24V DC inputs, two relay outputs		150-SCMD
	24V DC control power; two 24V DC inputs, two relay outputs		150-SCMR(1)
Replacement Cover	Replacement control module front cover		150-SCMRC
Replacement Removable Terminal Block	Control module control I/O replacement removable terminal block	Control module	150-SCMRTB
	PTC module replacement removable terminal block (set of 3)	150-SM2	150-SM2RTB
	Analog I/O option replacement removable terminal block	150-SM3	150-SM3RTB
	Digital I/O module replacement removable terminal block	150-SM4	150-SM4RTB

(1) Consult your local Rockwell Automation sales office or Allen-Bradley distributor for availability.

For Units with Integrated Bypass

Table 83 - Replacement Power Poles

Description		100...240V AC Control Voltage	24V DC Control Voltage
		Cat. No.	Cat. No.
Frame 3 Power Structure Assembly • Contains all three power poles in one package and includes the pole-to-control module transition cover and cooling fan.	108 A, 200...480V AC line	150-SPP108BD	150-SPP108BR (1)
	135 A, 200...480V AC line	150-SPP135BD	150-SPP135BR(1)
	108 A, 200...690V AC line	150-SPP108UD	150-SPP108UR(1)
	135 A, 200...690V AC line	150-SPP135UD	150-SPP135UR(1)
Frame 4 Power Pole • Contains one power pole	201 A, 200...480V AC line	150-SPP201B	
	251 A, 200...480V AC line	150-SPP251B	
	201 A, 200...690V AC line	150-SPP201U	
	251 A, 200...690V AC line	150-SPP251U	
Frame 5 Power Pole • Contains one power pole	317 A, 200...480V AC line	150-SPP317B	
	361 A, 200...480V AC line	150-SPP361B	
	480 A, 200...480V AC line	150-SPP480B	
	317 A, 200...690V AC line	150-SPP317U	
	361 A, 200...690V AC line	150-SPP361U	
	480 A, 200...690V AC line	150-SPP480U	
Base Plate • for mounting power poles	201...251 A	41391-803-01	
	317...480 A	41391-803-02	

(1) Consult your local Rockwell Automation sales office or Allen-Bradley distributor for availability.

Table 84 - Replacement Fan

Description	Rated Control Voltage	For Use With	Cat. No.
for SMC-50 Frame 3 controllers	100...240V AC	150-S108...-S135	150-SRF135D
	24V DC		150-SRF135R(1)
for SMC-50 Frame 4 controllers	100...240V AC	150-S201...-S251	150-SRF251D
	24V DC		150-SRF251R(1)
for SMC-50 Frame 5 controllers	100...240V AC	150-S317...-S480	150-SRF480D
	24V DC		150-SRF480R(1)

(1) Consult your local Rockwell Automation sales office or Allen-Bradley distributor for availability.

Table 85 - Replacement Controller Cover

Description	Rated Current [A]	Line Voltage [V AC]	Control Voltage	Cat. No.
For SMC-50 controller with Bypass	201	200...480	100...240V AC	150-S201RCBD
			24V DC(1)	150-S201RCBR(2)
		200...690	100...240V AC	150-S201RCUD
			24V DC(1)	150-S201RCUR(2)
	251	200...480	100...240V AC	150-S251RCBD
			24V DC(1)	150-S251RCBR(2)
		200...690	100...240V AC	150-S251RCUD
			24V DC(1)	150-S251RCUR(2)
	317	200...480	100...240V AC	150-S317RCBD
			24V DC(1)	150-S317RCBR(2)
		200...690	100...240V AC	150-S317RCUD
			24V DC(1)	150-S317RCUR(2)
	361	200...480	100...240V AC	150-S361RCBD
			24V DC(1)	150-S361RCBR(2)
		200...690	100...240V AC	150-S361RCUD
			24V DC(1)	150-S361RCUR(2)
	480	200...480	100...240V AC	150-S480RCBD
			24V DC(1)	150-S480RCBR(2)
		200...690	100...240V AC	150-S480RCUD
			24V DC(1)	150-S480RCUR(2)

(1) 24V DC Control Inputs ONLY. Not compatible with 24V AC Control Inputs.
(2) Consult your local Rockwell Automation sales office or Allen-Bradley distributor for availability.

For Solid-state Units

Table 86 - Replacement Power Poles

Description		100...240V AC Control Voltage	24V DC Control Voltage
		Cat. No.	Cat. No.
Frame B Power Structure Assembly • Contains all three power poles in one package and includes the pole-to-control module transition cover and cooling fan	90 A, 200...480V AC line	150-SPPB1B	150-SPPB1BR
	110 A, 200...480V AC line	150-SPPB2B	150-SPPB2BR
	140 A, 200...480V AC line	150-SPPB3B	150-SPPB3BR
	180 A, 200...480V AC line	150-SPPB4B	150-SPPB4BR
	90 A, 200...690V AC line	150-SPPB1U	150-SPPB1UR
	110 A, 200...690V AC line	150-SPPB2U	150-SPPB2UR
	140 A, 200...690V AC line	150-SPPB3U	150-SPPB3UR
	180 A, 200...690V AC line	150-SPPB4U	150-SPPB4UR
Frame C Power Pole • Contains one power pole — SCR, heatsink assembly, and cable	210 A, 200...480V AC line	150-SPPC1B	
	260 A, 200...480V AC line	150-SPPC2B	
	320 A, 200...480V AC line	150-SPPC3B	
	210 A, 200...690V AC line	150-SPPC1U	
	260 A, 200...690V AC line	150-SPPC2U	
	320 A, 200...690V AC line	150-SPPC3U	
Frame D Power Pole • Contains one power pole — SCR, heatsink assembly, and cable	361 A, 200...480V AC line	150-SPPD1B	
	420 A, 200...480V AC line	150-SPPD2B	
	520 A, 200...480V AC line	150-SPPD3B	
	361 A, 200...690V AC line	150-SPPD1U	
	420 A, 200...690V AC line	150-SPPD2U	
	520 A, 200...690V AC line	150-SPPD3U	

Table 87 - Replacement Cover

Description		Cat. No.
Replacement controller cover	210...320 A units	150-SCRC
	361...520 A units	150-SDRC

Table 88 - Replacement Fan

Description		Rated Control Voltage	For Use With	Cat. No.
Replacement Fan	for SMC-50 Frame B controllers	100...240V AC	150-SB units (90...180 A)	150-SF1
		24V DC		150-SF1R
	for SMC-50 Frame C controllers	100...240V AC	150-SC units (210...320 A)	150-SF2D
		24V DC		150-SF2R
	for SMC-50 Frame D controllers	100...240V AC	150-SD units (361...520 A)	150-SF3D
		24V DC		150-SF3R
Replacement Fan Cover	for SMC-50 Frame B controllers	—	150-SB units (90...180 A)	150-SBFC
	for SMC-50 Frame C controllers	—	150-SC units (210...320 A)	150-SCFC
	for SMC-50 Frame D controllers	—	150-SD units (361...520 A)	150-SDFC

IMPORTANT Carefully check current range, line voltage and control input voltage when selecting an upgrade kit. Not all control voltages or current ranges can be upgraded.

Table 89 - Upgrade Kits

Description	Kit Contents[1]	Rated Current [A]	Line Voltage [V AC]	Control Voltage[2]	Cat. No.
Frame 3 SMC Flex to SMC-50 controllers with bypass upgrade kit	• 150-SCMD control module – 150-SM4 digital I/O module • 20-HIM-A6 LCD HIM	108	200...690	100...240V AC	150-S108UPGD
		135			150-S135UPGD
	• 150-SCMR control module • 20-HIM-A6 LCD HIM	108	200...690	24V DC[3]	150-S108UPGR [4]
		135			150-S135UPGR [4]
Frame 4 SMC Flex to SMC-50 controllers with bypass upgrade kit	• 150-SCMD control module • 150-SM4 digital I/O module • 20-HIM-A6 LCD HIM • Plastic mounting/transition cover	201	200...480	100...240V AC	150-S201UPGBD
			200...575		150-S201UPGCD
			200...690		150-S201UPGUD
		251	200...480		150-S251UPGBD
			200...575		150-S251UPGCD
			200...690		150-S251UPGUD
	• 150-SCMR control module • 20-HIM-A6 LCD HIM • Plastic mounting/transition cover	201	200...480	24V DC[3]	150-S201UPGBR [4]
			200...575		150-S201UPGCR [4]
			200...690		150-S201UPGUR [4]
		251	200...480		150-S251UPGBR [4]
			200...575		150-S251UPGCR [4]
			200...690		150-S251UPGUR [4]

(1) Kit contains one of each catalog number listed.
(2) The SMC-50 control module provides two (2) 24V DC control inputs. If you need additional inputs, you must use 100...240V AC inputs (requires 150-SM4 option module).
(3) 24V DC control voltage ONLY. Not compatible with 24V AC control voltage.
(4) Consult your local Rockwell Automation sales office or Allen-Bradley distributor for availability.

Specifications

Table 90 - Functional Design

Standard Features		Description
Installation	Power Wiring	standard squirrel-cage induction motor or a Wye-Delta, six-lead motor
	Control Wiring	2- and 3-wire control for a wide variety of applications
Configuration/Setup[1]	Keypad	Cat. No. 20-HIM-A6 full numeric keypad with LCD display Cat. No. 20-HIM-C6S remote panel mount full numeric keypad with LCD display
	Software	parameter values are downloaded to the SMC-50 with the Connected Components Workbench, DriveTools, and DriveExplorer programming software packages
	Parameter Configuration Option Module (PCM)	Cat. No. 150-SM6 provides simple and limited configuration by DIP and rotary dial switches
Communications		four DPI ports for local serial communications. Network communication supported by optional 20- COMM-X modules
Starting and Stopping Modes		modes include: Soft Start, Coast-to-Stop, Soft Stop, Current Limit Start, Dual Ramp, Full Voltage, Linear Speed Acceleration (start), Linear Speed Deceleration (stop), Torque Start, and Preset Slow Speed
Pump Control	Start and Stop	helps reduce fluid surges in centrifugal pumping systems during the starting and stopping period
Braking Control[2]	SMB Smart Motor Braking	provides motor braking without additional equipment for applications that require the motor to stop quickly
	Accu-Stop[3]	provides controlled position stopping; during stopping, brake torque is applied to the motor until the motor reaches the preset slow speed and holds the motor at this speed until a stop command is given - braking torque is then applied until the motor reaches zero speed - braking current is programmable
	Slow Speed with Braking	used on applications that require slow speed (in the forward or reverse direction) for positioning or alignment and requires braking control to stop
	External Braking	activates the external braking device by using aux. relay output
Protection and Diagnostics[4]		displays: Power Loss, Line Fault, Voltage Unbalance, Excessive Starts/Hour, Phase Reversal, Undervoltage, Overvoltage, Controller Temperature, Stall, Jam, Open Gate, Overload, Underload, and Communication Fault
Metering Indication[5]		provides: Phase Current, Current Average, Phase-to-Phase Voltage, Voltage P-P Average, Phase-to-neutral Voltage, Calculated Torque, Real Phase Power, Real Power, Real Energy, Real Demand, Max Real Demand, Reactive Power, Reactive Energy + and -, Reactive Energy, Reactive Demand, Max Reactive Demand, Apparent Power, Apparent Energy, Apparent Demand, Number of Periods, Power Factor, Energy Savings, Elapsed Time 1 and 2, Running Time, Motor Speed, Start Time 1-5, Peak Current 1-5, Total Starts, THD V, THD I, THD V Average, THD I Average, Line Frequency, Current Imbalance, and Voltage Unbalance
LED Status Indication by Multi-color (standard)		displays fault and alarm codes: Running - with alarm, Running - no alarm, Ready - with alarm, Ready - no alarm, Ready - tuning enabled on next start, and Firmware Download Active - with alarm
Auxiliary Contacts (two standard)		two fully programmable contacts as: normal, UTS, fault, alarm, external brake, auxiliary control, network, external bypass, or fan control

(1) The configuration method must be ordered separately from the controller, which does not include a setup tool.
(2) Not intended to be used as an emergency stop. See the applicable standards for emergency stop requirements.
(3) Accu-Stop is not included as a parameter/function like that of the SMC Flex controller; you can accomplish the Accu-Stop function with SMB mode and Slow Speed with Braking.
(4) Diagnostic indication depends on the type of configuration tool used. The standard LED status indication displays: Inhibit (stop enabled), Fault (non- resettable), Fault (resettable). For full local access, a HIM or personal computer software is required. For network access, full access to data can also be obtained.
(5) Metering Indication depends on the type of configuration tool being used. Metering Indication requires the use of a HIM or a personal computer software configuration tool for full local access. Full access to data can also be obtained via network.

Electrical Ratings

Table 91 - Power Circuit Ratings

Description	Device Rating	UL/CSA/NEMA	IEC
Rated Operation Voltage	480V	200...480V AC (-15%, +10%)	200...415V (-15%, +10%)
	690V	200...600V AC (-15%, +10%)	200...690V/Y (-15%, +10%)
Rated Insulation Voltage	480V	—	500V
	690V	—	690V
Rated Impulse Voltage	480V	—	6000V
	690V	—	6000V
Dielectric Withstand	480V	2200V AC	2500V
	690V	2200V AC	2500V
Repetitive Peak Inverse Voltage Rating	480V	1400V	1400V
	690V	1800V	1800V
Operating Frequency	All	47...63 Hz	47...63 Hz

Table 92 - Utilization Category

Description		Device Rating	UL/CSA/NEMA	IEC
Integrated Bypass		108...480A	MG 1	AC-53b:3.0-50:1750
Solid-state	Normal Duty	90...520 A		AC-53a:3.5-10:99-2
	Heavy Duty			AC-53a:3.5-30:99-1
Protection Against Electrical Shock	Integrated Bypass	108...480A	–	IP00 (IP20 - Control Terminals only)
		108...480A		IP2X (with Optional Terminal Cover)
	Solid-state	90...520 A		IP00 (IP20 - Control Terminals only)
		90...180 A		IP2X (with Optional Terminal Cover)
DV/DT Protection		480V	RC Snubber Network	
		690V		
Transient Protection		480...600V	Metal Oxide Varistors: 220 Joules	
		690V	None	

Table 93 - Control Power Specifications

Description	UL/CSA/NEMA	IEC
Rated Operational Voltage	100...240V AC (-15%...+10%) or 24V DC (-10%...+10%)	
Rated Insulation Voltage	–	240V
Rated Impulse Voltage	–	3000V
Dielectric Withstand	1500V AC	1500V
Operating Frequency	47...63 Hz or DC	
Control Power Ride Through	22 ms	
Max. Output of 24V DC Supply (Terminals 8 and 12)	300 mA	
Control Module Battery Type	CR 2032	



This product contains a sealed lithium battery that may need to be replaced during the life of the product.

At the end of its life, the battery contained in this product should be collected separately from any unsorted municipal waste.

The collection and recycling of batteries helps protect the environment and contributes to the conservation of natural resources as valuable materials are recovered.



ATTENTION: There is a danger of explosion if the lithium battery or real-time clock module in this product is incorrectly replaced. Do not replace the battery or real-time clock module unless power has been removed and the area is known to be nonhazardous.

Replace the battery only with catalog number 2711P-RY2032 or an equivalent CR2032 coin-cell battery.

Do not dispose of the lithium battery or real-time clock module in a fire or incinerator. Dispose of used batteries in accordance with local regulations.

For safety information on the handling of lithium batteries, including handling and disposal of leaking batteries, see Guidelines for Handling Lithium Batteries, publication AG 5-4.

Perchlorate material – special handling may apply. See www.dtsc.ca.gov/hazardouswaste/perchlorate.
This perchlorate warning only applies to primary Lithium Manganese Dioxide ($LiMnO_2$) cells or batteries, and products containing these cells or batteries, sold or distributed in California, USA.

Table 94 - Control Module Standard Inputs: Terminals 10 and 11

Description		UL/CSA/NEMA	IEC
Nominal Operating Voltage		24V DC	
Operating Voltage Range		15...30V DC	
On State	Current, min.	2.8 mA	
	Voltage, min.	10V DC	
Off State	Current, max.	3 mA	
	Voltage, max.	10.9V DC	
Inrush Current Maximum		7 mA	
Input Delay Time		On-to-Off: 30 ms, Off-to-On: 20 ms	
Reverse Polarity Protection		Yes	
Rated Insulation Voltage		—	60V
Rated Impulse Voltage		—	500V
Dielectric Withstand		500V AC	1000V AC

Table 95 - Control Module Standard Outputs: Terminals 4/5 and 6/7

Description	UL/CSA/NEMA	IEC
Outputs	Aux 1, Aux 2	
Type of Control Circuit	Electromagnetic Relay	
Number of Contacts per Relay	1	
Type of Contacts	Programmable N.O./N.C. (electrically held closed)	
Type of Current	AC	
Rated Operational Current	3 A @ 120V AC, 1.5 A @ 240V AC	
Conventional Thermal Current I_{th} AC/DC	5 A	
Make/Break VA	3600/360	
Utilization Category	B300	AC-15
Off-State Leakage Current	0.024 mA @ 24V	
Off-State Leakage Current	0.12 mA @120V	
Off-State Leakage Current	0.24 mA @ 240V	

Table 96 - Wiring Terminals (applies to Control Module Standard I/O and Expansion Module Terminals 150-SM2, 150-SM3, 150-SM4)

Description	Device Rating
Terminal Style	M3 Screw Clamp
Terminal Type	Removable
Screw Terminal Torque	0.8 N•m (7.0 lb•in)
Terminal Wire Size	0.2...2.5mm^2 (24...14 AWG)
Wire Strip Length	7.0 mm (0.27 in.)

Table 97 - Cat. No. 150-SM4 Optional Digital Control Inputs: Terminals A1, A2

Description		UL/CSA/NEMA	IEC
Nominal Operating Voltage		100...240V AC	
Operating Voltage Range		85V...264V AC @ 47 Hz...63 Hz	
On State	Current, min.	9.7 mA @ 47 Hz, 9.7 mA @ 62.4 Hz	
	Voltage, min.	74.5V AC @ 47 Hz, 55.9V AC @ 62.4 Hz	
Off State	Current, max.	9.0 mA @ 47 Hz, 9.3 mA @ 62.4 Hz	
	Voltage, max.	68.8V AC @ 47 Hz, 53.6V AC @ 62.4 Hz	
Inrush Current Maximum		3.64 A	
Input Delay Time		On-to-Off: 30 ms, Off-to-On: 25 ms	
Rated Insulation Voltage		—	240V
Rated Impulse Voltage		—	3000V
Dielectric Withstand		1600V AC	2000V AC

Table 98 - Cat. No. 150-SM4 Optional Digital Control Inputs: Terminals A3 and A4

Description		UL/CSA/NEMA	IEC[1]
Nominal Operating Voltage		100...240V AC	
Operating Voltage Range		85V...264V AC @ 47 Hz...63 Hz	
On State	Current, min.	5.1 mA @ 47 Hz, 5.0 mA @ 62.4 Hz	
	Voltage, min.	74.5V AC @ 47 Hz, 55.8V AC @ 62.4 Hz	
Off State	Current, max.	4.7 mA @ 47 Hz, 4.8 mA @ 62.4 Hz	
	Voltage, max.	68.6V AC @ 47 Hz, 53.5V AC @ 62.4 Hz	
Inrush Current Maximum		3.64 A	
Input Delay Time		On-to-Off: 30 ms, Off-to-On: 25 ms	
Rated Insulation Voltage		—	240V
Rated Impulse Voltage		—	3000V
Dielectric Withstand		1600V AC	2000V AC

(1) Meets IEC Type 2 specifications for inputs per IEC 60947-1 for 240V AC only.

Table 99 - Cat. No. 150-SM4 Optional Outputs: Terminals A6/A7, A8/A9, A10/A11

Description	UL/CSA/NEMA	IEC
Outputs	Aux 1, Aux 2, Aux 3	
Type of Control Circuit	Electromagnetic Relay	
Number of Contacts per Relay	1	
Type of Contacts	Programmable N.O./N.C. (electrically held closed)	
Type of Current	AC	
Rated Operational Current	3 A @ 120V AC, 1.5 A @ 240V AC	
Conventional Thermal Current I_{th} AC/DC	5 A	
Make/Break VA	3600/360	
Utilization Category	B300	AC-15
Off-State Leakage Current	0.024 mA @ 24V	
	0.12 mA @120V	
	0.24 mA @ 240V	

Table 100 - Cat. No. 150-SM3 Optional Analog Control Inputs: Terminals B5...B10

Description	Rating
Number of Inputs	2 differential inputs
Normal Operating Input Ranges	±10V, 0...10V, 0...5V, 1...5V, 0...20 mA, 4...20 mA
Full-scale Operating Input Ranges	±10.5V, 0...10.5V, -0.5...5.25V, 0.5...5.25V, 0...21 mA, 3.5...21 mA
Input Resolution	16 bit (sample rate = 60 Hz)/13 bit (sample rate = 250 Hz)
Data Refresh Rate	Filter dependent: 100 ms (sample rate = 60 Hz); 24 ms (sample rate = 250 Hz)
Rated Working Voltage	24V DC / 17V AC
Common Mode Voltage Range	±10V DC / channel
Input Impedance	220 kΩ: voltage mode
	249 Ω: current mode
Input Channel Diagnostics	Over and Under Range and Open Circuit
Open Circuit Detection Time	Positive Full Scale Reading: within 3 seconds (max)
Maximum Overload at Input Terminals	Voltage: ±24V DC continuous at 0.1 mA
	Current: ±30 mA continuous at 7V DC
External Calibration	Not required: auto-calibration performed by the module if required to meet specs.
Module Isolation to Control Board	Yes (1000V AC)
Removable Terminal Block	Yes (Cat. No.150-SM3RTB as a spare replacement part)
Cable Type	Belden 8760 (or equiv.) 0.750 mm^2 (18 AWG twisted pair 100% shield with drain)

Table 101 - Cat. No. 150-SM3 Optional Analog Control Outputs: Terminals B1...B4

Description		Rating
Number of Outputs		2 Single-ended
Normal Operating Ranges		±10V, 0...10V, 0...5V, 0...20 mA, 4...20 mA
Full Scale Operating Ranges		±10.5V, 0...10.5V, -0.5...5.25V, 0...21 mA, 3.5...21 mA
Output Resolution		16 bit (15 plus sign bipolar)
Resistive Load on Current Output		0...750 Ω
Load Range on Voltage Output		1 kΩ at 10V DC
Max. Inductive Load (Current Outputs)		15 mH
Max. Capacitive Load (Voltage Outputs)		100 µF
Overall Accuracy	Voltage Terminal	±0.5% full scale at 25 °C (77 °F)
	Current Terminal	±0.35% full scale at 25 °C (77 °F)
Accuracy Drift with Temperature		±5 PPM / °C
Output Impedance		15 Ω (typical)
Open and Short-circuit Protection		Yes
Maximum Short-circuit Current		45 mA
Output Overvoltage Protection		Yes

Table 102 - PTC Input Ratings (Cat. No. 150-SM2 required)

Description	Rating
Response Resistance	3400 Ω ± 150 Ω
Reset Resistance	1600 Ω ± 100 Ω
Short-circuit Trip Resistance	25 Ω ± 10 Ω
Max. Voltage at PTC Terminals (RPTC = 4 kΩ)	< 7.5 V
Max. Voltage at PTC Terminals (RPTC = open)	30V
Max. No. of Sensors (wired in series)	6
Max. Cold Resistance of PTC Sensor Chain	1500 Ω
Response Time	800 ms

Table 103 - Control Power Requirements (Maximum Control Circuit Consumption)

Description		Current Range [A]	Control Voltage	
			100...240V AC	24V DC
Base Power Draw: Control Module with Heat Sink Fan	Integrated Bypass	108...135	150 VA	75 W
		201...251	175 VA	75 W
		317...480	225 VA	180 W
	Solid-state	90...180	150 VA	75 W
		210...260	150 VA	75 W
		361...520	300 VA	300 W
Option Power Adder • for each option installed, add to base power to obtain total power requirement)	Human Interface Module (HIM)	–	10 VA	2 W
	150-SM2(1)	–	30 VA	4 W
	150-SM3	–	30 VA	4 W
	150-SM4	–	50 VA	2 W
	150-SM6(1)	–	5 VA	1 W
	20-COMM-X(1)	–	25 VA	4 W

(1) Max. one of each option type per control module.

Table 104 - Continuous Duty Power Structure Heat Dissipation at Rated Current (Watts)

Description		Current Range [A]	Heat Dissipation [W]
Controller	Integrated Bypass	108	27
		135	40
		201	75
		251	93
		317	100
		361	120
		480	165
	Solid-state	90	270
		110	330
		140	420
		180	540
		210	630
		260	780
		320	960
		361	1083
		420	1260
		520	1560

Power Calculation:

$$\text{Max. Total Power Dissipation} = \underset{\text{Base Power}}{____} + \underset{\text{Options}}{____} + \underset{\text{Power Structure}}{____} \text{ Watts}$$

Example: Solid-state 361 A device with a 20-COMM-X, HIM, and Cat. No. 150-SM4

$$\text{Max. Total Power Dissipation} = \underset{\text{Base Power}}{300} + \underset{\text{Options}}{(25+10+50)} + \underset{\text{Power Structure}}{1083} \text{ Watts}$$

Max. Total Power Dissipation = 1468 W

Performance Ratings

Integrated Bypass Devices

Table 105 - Integrated Bypass SCPD Performance, 600V Maximum, Type 1

SCPD Performance[1]			Type 1 Ratings[2]			
Motor Connection Type	Cat. No	Current Rating [A]	Non-time Delay Fuse[3]		Inverse Time (Thermal Magnetic) Circuit Breaker	
			Max. Standard Available Fault [kA]	Max. Current [A]	Max. Standard Available Fault [kA]	Max. Current [A]
Line	150-S108N...	108	10	400	10	300
	150-S135N...	135		500		400
	150-S201N...	201	18	600	18	600
	150-S251N...	251		700		700
	150-S317N...	317	30	800	30	800
	150-S361N...	361		1000		1000
	150-S480N...	480	42	1200	42	1200
Inside Delta	150-S108N...	187	10	600	10	500
	150-S135N...	234		700		700
	150-S201N...	348	18	1000	18	1000
	150-S251N...	435		1200		1200
	150-S317N...	549	30	1600	30	1600
	150-S361N...	625		1600		1600
	150-S480N...	831	42	1600	42	1200

(1) Consult local codes for proper sizing of short-circuit protection.
(2) Basic Requirements for Type 1 Coordination: Under the short-circuit condition, the starter shall cause no danger to persons or to the installation. The starter may not be suitable for further service without repair or replacement of parts. For further details, refer to UL 508/CSA C22.2 No. 14 and EN 60947-4-2.
(3) Non-Time Delay Fuses: Class K5 up to 600 A, Class L above 600 A.

Table 106 - Integrated Bypass SCPD Performance, 690V Maximum, Type 1, Line Connected Motors Only

SCPD Performance[1]			Type 1 Ratings[2]		
Motor Connection Type	Cat. No	Current Rating [A]	Max. Standard Available Fault [kA]	Max. Ampere Tested — North American Style	Max. Ampere Tested — European Style
Line	150-S108N...	108	70	A070URD33xxx500	6,9 gRB 73xxx400 6,6URD33xxx500
	150-S135N...	135		A070URD33xxx500	6,9 gRB 73xxx400 6,6URD33xxx500
	150-S201N...	201		A070URD33xxx700	6,9 gRB 73xxx630 6,6URD33xxx700
	150-S251N...	251		A070URD33xxx700	6,9 gRB 73xxx630 6,6URD33xxx700
	150-S317N...	317		A070URD33xxx900	6,9 gRB 73xxx800 6,6URD33xxx900
	150-S361N...	361		A070URD33xxx900	6,9 gRB 73xxx800 6,6URD33xxx900
	150-S480N...	480		A070D33xxx1250 A100URD73xxx1250	9 URD 73xxx1250 6,6URD33xxx1250

(1) Consult local codes for proper sizing of short-circuit protection.
(2) Basic Requirements for Type 1 Coordination: Under the short-circuit condition, the starter shall cause no danger to persons or to the installation. The starter may not be suitable for further service without repair or replacement of parts. For further details, see UL 508/CSA C22.2 No. 14 and EN 60947-4-2.

Table 107 - Integrated Bypass SCPD Performance, High Fault, Type 1

SCPD Performance[1]			Type 1 Ratings[2]				
Motor Connection Type	Cat. No	Current Rating [A]	Class J or Class L Fuse[3]		Inverse Time (Thermal Magnetic) Circuit Breaker[4] 480V, 65kA Maximum		
			Max. High Capacity Available Fault (600V) [kA]	Max. Current [A]	Max. Current [A]	Cat. No.	Rating Plug Cat. No.
Line	150-S108N...	108	70	200	300	140G-K6F3-D30	–
	150-S135N...	135		225	400	140G-K6F3-D40	–
	150-S201N...	201		350	600	140G-M6F3-D60	–
	150-S251N...	251		400	700	140G-M6F3-D80	–
	150-S317N...	317	69	500	800	140G-N6H3-E12	140G-NRP-D80
	150-S361N...	361		600	1000	140G-N6H3-E12	140G-NRP-E10
	150-S480N...	480		800	1200	140G-N6H3-E12	–
Inside Delta	150-S108N...	187	70	300	400	140G-K6F3-D40	–
	150-S135N...	234		400	400	140G-K6F3-D40	–
	150-S201N...	348		600	800	140G-M6F3-D80	–
	150-S251N...	435		800	800	140G-M6F3-D80	–
	150-S317N...	549	69	1000	1200	140G-N6H3-E12	–
	150-S361N...	625		1200	1200	140G-N6H3-E12	–
	150-S480N...	831		1600	1200	140G-N6H3-E12	–

(1) Consult local codes for proper sizing of short-circuit protection.
(2) Basic Requirements for Type 1 Coordination: Under the short-circuit condition, the starter shall cause no danger to persons or to the installation. The starter may not be suitable for further service without repair or replacement of parts. For further details, refer to UL 508/CSA C22.2 No. 14 and EN 60947-4-2.
(3) High Capacity fault ratings when used with time delay Class J or time delay Class L fuse.
(4) Circuit Breaker must be of the designated 140G Frame.

Table 108 - Integrated Bypass Semiconductor Fusing Recommendations

Semiconductor (SCR) Fusing[1]							
Cat. No.	Current Rating [A]		I^2t Reference (10^3A^2s)	North America[2] [3]		Type 2 Coordination per EN 60947-2 [3] [4]	
	Line[5]	Inside Delta[6]		Max. Available Fault (480V) [kA]	Ferraz-shawmut Fuse Part No.	Max. Available Fault (500V) [kA]	Ferraz-shawmut Fuse Part No.
150-S108N...	108	187	87	65	A70QS200	65	6,9URD30*0250
150-S135N...	135	234	90		A70QS200		6,9URD30*0250
150-S201N...	201	348	200		A70QS400		6,9URD31*0450
150-S251N...	251	435	238		A70QS400		6,9URD31*0450
150-S317N...	317	549	300		A70QS450		6,9URD33*0550
150-S361N...	361	625	320		A70QS450		6,9URD33*0550
150-S480N...	480	831	1200		A70QS700	45	6,9URD33*0550

(1) Consult local codes for proper sizing of short-circuit protection.
(2) Calculated only, NOT tested.
(3) Fuse size based on a start profile of 300% of the controller maximum current rating for 50 seconds. Contact Industrial Controls Technical Support by email at raictechsupport@ra.rockwell.com or by phone at +1 440-646-5800 for applications with a longer start time or higher starting current.
(4) Basic requirements for Type 2 Coordination per EN60947-4-2: under short-circuit conditions, the device shall cause no danger to persons or installation and shall be suitable for further use.
(5) For line-connected motors, connect fuses to the SMC-50 in line with three-phase power terminals L1, L2, and L3.
(6) For delta-connected motors, connect fuses to the SMC-50 inside the delta after terminals L1-T6, L2-T4, and L3-T5.

Solid-state Devices

Table 109 - Solid-state SCPD Performance, 600V Maximum, Type 1

SCPD Performance[1]			Type 1 Ratings[2]								
Motor Connection Type	Cat. No	Current Rating [A]	Non-time Delay Fuse[3]			Time Delay Fuse[4]			Inverse Time (Thermal Magnetic) Circuit Breaker		
			Max. Standard Available Fault [kA]	Typical Current [A]	Max. Current [A]	Max. Standard Available Fault [kA]	Typical Current [A]	Max. Current [A]	Max. Standard Available Fault [kA]	Typical Current [A]	Max. Current [A]
Line[5]	150-SB1N...	90	10	250	350	10	150	200	10	225	350
	150-SB2N...	110		300	400		175	225		250	300
	150-SB3N...	140		400	500		225	300		350	400
	150-SB4N...	180		500	500		300	400		450	500
	150-SC1N...	210	18	600	600	18	350	450	18	500	600
	150-SC2N...	260		700	700		450	500		600	700
	150-SC3N...	320		800	800		500	700		800	800
	150-SD1N...	361	30/18[6]	1000	1000	30/18[6]	600	800	30/18[6]	800	1000
	150-SD2N...	420		1200	1200		700	800		1000	1200
	150-SD3N...	520		1200	1200		800	1000		1200	1200
Inside Delta[7]	150-SB1N...	155	18	450	450	18	250	300	18	350	450
	150-SB2N...	190		500	500		300	400		450	500
	150-SB3N...	242		700	700		400	500		600	700
	150-SB4N...	311		800	800		500	600		700	800
	150-SC1N...	363	30	1000	1000	30	600	800	30	800	1000
	150-SC2N...	450		1200	1200		700	1000		1000	1200
	150-SC3N...	554		1600	1600		800	1200		1200	1600
	150-SD1N...	625	42	1600	1600	42	1000	1200	42	1200	1600
	150-SD2N...	727		2000	2000		1200	1600		1600	2000
	150-SD3N...	900		2500	2500		1200	2000		2000	2500

(1) Consult local codes for proper sizing of short-circuit protection.
(2) Basic Requirements for Type 1 Coordination: Under the short-circuit condition, the starter shall cause no danger to persons or to the installation. The starter may not be suitable for further service without repair or replacement of parts. For further details, refer to UL 508/CSA C22.2 No. 14 and EN 60947-4-2.
(3) Non-Time Delay Fuses: Class K5 up to 600 A, Class L above 600 A.
(4) Time Delay Fuse: Devices rated 90...180 A (155...311 A): Class RK5. Devices rated 210...520 A (363...900 A): Class RK5 or Class J up to 600 A, Class L above 600 A.
(5) UL/CSA (Type 1) and EN 60947-4-2 (Type 1) for Line-Connected Motors: Suitable for use on a circuit capable of delivering not more than the listed max. RMS symmetrical amperes (UL: 600V maximum, IEC: 690V max.).
(6) UL/CSA applications = 30 kA, 600V maximum. IEC applications = 18 kA, 690V maximum.
(7) UL/CSA (Type 1) and EN 60947-4-2 (Type 1) for Inside-the-Delta Connected Motors: Suitable for use on a circuit capable of delivering not more than the listed max. RMS symmetrical amperes (UL and IEC: 600V maximum).

Table 110 - Solid-state SCPD Performance, High Fault, Type 1

SCPD Performance[1]			Type 1 Ratings[2]					
Motor Connection Type	Cat. No	Current Rating [A]	Class J or Class L Fuse[3]			Inverse Time (Thermal Magnetic) Circuit Breaker 480V, 65 kA Maximum		
			Max. High Capacity Available Fault (600V) [kA]	Typical Current [A]	Max. Current [A]	Max. Current [A]	Cat. No.	Rating Plug Cat. No.
Line	150-SB1N...	90	100	150	200	350	140G-K6F3-D40	–
	150-SB2N...	110		175	225	300	140G-K6F3-D30	–
	150-SB3N...	140		225	300	400	140G-K6F3-D40	–
	150-SB4N...	180		300	400	400	140G-K6F3-D40	–
	150-SC1N...	210		350	450	600	140G-M6F3-D60	–
	150-SC2N...	260		450	500	700	140G-M6F3-D80	–
	150-SC3N...	320		500	700	800	140G-M6F3-D80	–
	150-SD1N...	361		601	800	1000	140G-N6H3-E12	140G-NRP3-E10
	150-SD2N...	420		700	800	1200	140G-N6H3-E12	–
	150-SD3N...	520		800	1000	1200	140G-N6H3-E12	–
Inside Delta	150-SB1N...	155	65	250	300	450	140G-M6F3-D60	–
	150-SB2N...	190		300	400	500	140G-M6F3-D60	–
	150-SB3N...	242		400	500	700	140G-M6F3-D80	–
	150-SB4N...	311		500	600	700	140G-M6F3-D80	–
	150-SC1N...	363		601	800	1000	140G-N6H3-E12	140G-NRP3-E10
	150-SC2N...	450		700	1000	1200	140G-N6H3-E12	–
	150-SC3N...	554		800	1200	1200	140G-N6H3-E12	–
	150-SD1N...	625		1000	1200	Pending[4]		
	150-SD2N...	727		1200	1600			
	150-SD3N...	900		1200	2000			

(1) Consult local codes for proper sizing of short-circuit protection.
(2) Basic Requirements for Type 1 Coordination: Under the short-circuit condition, the starter shall cause no danger to persons or to the installation. The starter may not be suitable for further service without repair or replacement of parts. For further details, refer to UL 508/CSA C22.2 No. 14 and EN 60947-4-2.
(3) High Capacity fault ratings when used with time delay Class J or time delay Class L fuse.
(4) Other circuit breakers pending.

Table 111 - Solid-state Semiconductor Fusing Recommendations

Semiconductor (SCR) Fusing[1]							
Cat. No.	Current Rating [A]		I^2t Reference (10^3A^2s)	North America[2] [3]		Type 2 Coordination Per EN 60947-4-2[3] [4]	
	Line[5]	Inside Delta[6]		Max. Available Fault (480V) [kA]	Ferraz-shawmut Fuse Part No.	Max. Available Fault (500V) [kA]	Ferraz-shawmut Fuse Part No.
150-SB1N...	90	155	92	65	A70QS150	65	6,9URD30*0200
150-SB2N...	110	190	95		A70QS175		6,9URD30*0200
150-SB3N...	140	242	100		A70QS200		6,9URD30*0250
150-SB4N...	180	311	106		A70QS250		6,9URD31*0315
150-SC1N...	210	363	200		A70QS350		6,9URD30*0315
150-SC2N...	260	450	238		A70QS400		6,9URD31*0400
150-SC3N...	320	554	320		A70QS450		6,9URD31*0450
150-SD1N...	361	625	1000		A70QS500		6,9URD31*0500
150-SD2N...	420	727	1100		A70QS600		6,9URD31*0630
150-SD3N...	520	900	1200		A70QS700		6,9URD31*0700

(1) Consult local codes for proper sizing of short-circuit protection.
(2) Calculated only, NOT tested.
(3) Fuse size based on a start profile of 350% of the controller maximum current rating for 10 seconds. Contact Industrial Controls Technical Support by email at raictechsupport@ra.rockwell.com or by phone at +1 440-646-5800 for applications with a longer start time or higher starting current.
(4) Basic Requirements for Type 2 Coordination: Per EN 60947-4-2 under short-circuit conditions, the device shall cause no danger to persons or installation and shall be suitable for further use.
(5) For line-connected motors, connect fuses to the SMC-50 in line with three-phase power terminals T6, T4, and T5.
(6) For delta-connected motors, connect fuses to the SMC-50 inside the delta after terminals L1-T6, L2-T4, and L3-T5.

Environmental, Mechanical, and Other Ratings

Table 112 - Environmental Ratings

Attribute		Rating
Operating Ambient Temperature Range (surrounding air ambient)	Integrated Bypass Devices	-20…+50 °C (-4…+122 °F) (no derating) — For operation 50…65 °C (122…149 °F), refer to Thermal Wizard. -20…+40 °C (-4…104 °F) (Enclosed)
	Solid-state Devices	-20…+40 °C (-4…+104 °F) (no derating) — For operation 40…65 °C (104…149 °F), see Thermal Wizard. -20…+40 °C (-4…104 °F) (Enclosed)
Storage and Transportation Temperature Range		-25…+75 °C (-13…+167 °F)
Altitude		2000 m (6560 ft) without derating; for operation above 2000…7000 m (6560…22965 ft) maximum, refer to Thermal Wizard
Humidity		5…95% (noncondensing)
Pollution Degree		2
Mounting Orientation		Vertical
Atmospheric Protection		ANSI/ISA - 71.04-2013; Class G3 Environment

Table 113 - Mechanical Ratings

Attribute					Rating
Resistance to Vibration		Operational		All Devices	1.0 G Peak, 0.15 mm (0.006 in.) Displacement
		Non-Operational			2.5 G Peak, 0.38 mm (0.015 in.) Displacement
Resistance to Shock	Integrated Bypass	Operational		108…480 A	5.5 G
		Non-Operational			25 G
	Solid-state	Operational		90…520 A	15 G
		Non-Operational			30 G
Construction		Power Poles			Heatsink Hockey Puck Thyristor Modular Design
		Control Modules			Thermoset and Thermoplastic Moldings
		Metal Parts			Plated Brass, Copper, or Steel
Terminals		Power Terminal Lugs	Integrated Bypass	108…135 A	One M10 x 1.5 diameter hole per power pole
				201…251 A	Two M10 x 1.5 diameter hole per power pole
				317…480 A	Two M12 x 1.75 diameter hole per power pole
			Solid-state	90…180 A	One 10.5 mm (0.41 in.) diameter hole per power pole
				210…320 A	Two 10.5 mm (0.41 in.) diameter holes per power pole
				361…520 A	Two 13.5 mm (0.53 in.) diameter holes per power pole
		Power Terminal Markings			NEMA, CENELEC EN50 012
		Control Terminals		M3 Screw Clamp	Clamping Yoke Connection

Table 114 - Electromagnetic Compatibility (EMC) Ratings

Attribute		Rating
EMC Emission Levels	Conducted Radio Frequency Emissions	Class A (per EN 60947-4-2)
	Radiated Emissions	Class A (per EN 60947-4-2)
EMC Immunity Levels	Electrostatic Discharge	8 kV Air Discharge Per EN 60947-4-2
	Radio Frequency Electromagnetic Field	Per EN 60947-4-2
	Fast Transient	Per EN 60947-4-2
	Surge Transient	Per EN 60947-4-2

Table 115 - Overload Characteristics

Overload Characteristics	Device Type	Rated Current [A]	Line-connected Devices	Delta-connected Devices
Current Range	Integrated Bypass Devices	108	27…108	47…187
		135	34…135	59…234
		201	67…201	116…348
		251	84…251	145…435
		317	106…317	183…549
		361	120…361	208…625
		480	160…480	277…831
	Solid-state Devices	90	30…90	52…155
		110	37…110	65…190
		140	47…140	82…242
		180	60…180	104…311
		210	70…210	122…363
		260	87…260	151…450
		320	107…320	186…554
		361	120…361	210…625
		420	140…420	243…727
		520	174…520	302…900
Overload Type			Electronic - using I^2t algorithm	
Trip Classes			5 to 30	
Trip Current Rating			118% of Motor FLC	
Number of Poles			3	

Table 116 - Standards Compliance and Certifications

Standards Compliance	Certifications
UL 508	cULus Listed (Open Type) (File No. E96956)
EN 60947-4-2	CE Marked per EMC Directive and Low Voltage Directive
	CCC(1)
	C-Tick(1)
	EAC(1)
	KCC(1)
	ABS(1)

(1) For updated certification status of controllers with 24V DC control power, consult your local Rockwell Automation sales office or Allen-Bradley distributor, or rok.auto/productcertifications.

Table 117 - Integrated Bypass Devices: Protection Device and Bypass Component Selection—Line-connected Motor

Description	SMC-50 Cat. No.[1]						
	150-S108N	150-S135N	150-S201N	150-S251N	150-S317N	150-S361N	150-S480N
Rated Current [A]	108	135	201	251	317	361	480
Voltage	230...600V AC	230...600V AC	230...600V AC	230...600V AC	230...600V AC	230...600V AC	230...600V AC
Short-circuit Current Ratings (SCCR)[2]							
Standard Fault SCCR at 600V							
Std. Available Fault [kA]	10		18		30		42
Max. Non-Time Delay Fuse	400	500	600	700	800	1000	1200
Max. Inverse Time Circuit Breaker (CB)	300	400	600	700	800	1000	1200
High Fault SCCR							
High Available Fault with Fuses at 600V [kA]	70				69		
Max. Class J or L Time Delay Fuse	200	225	350	400	500	600	800
High Available Fault with Circuit Breaker at 480V [kA]	Pending						
Max. Inverse Time CB (Bul. 140G required)[3]							
Bul. 140G MCCB Frame Size							
Branch Protection Reference[2]							
Inverse Time Circuit Breaker Selections[1]							
35 kA at 600V Maximum	140G- K6F3-D...	140G- K6F3-D...	140G- M6F3-D...	140G- M6F3-D...	140G- M6F3-D...	–	–
50 kA at 600V Maximum	–	–	–	–	–	140G- N6H3-E...[4]	140G- N6H3-E12
65 kA at 480V Maximum[3]	Pending						
Fused Disconnect Selections, For Use With Non-Time Delay Fuses	194R-J400-1753	194R-J600-1753	194R-J600-1753	194R-L800-1753	194R-L800-1753	–	–

(1) For complete catalog numbers, see the product directory: rok.auto.
(2) Always refer to local codes for proper selection of branch circuit components.
(3) Circuit Breaker must be of the designated 140G Frame size for high fault short circuit ratings.
(4) Requires rating plug selection based on application; see the product directory: rok.auto.

Table 118 - Solid-state Devices: Protection Device and Bypass Component Selection Overview—Line-connected Motor

Description		SMC-50 Cat. No.[1]									
		150-SB1N	150-SB2N	150-SB3N	150-SB4N	150-SC1N	150-SC2N	150-SC3N	150-SD1N	150-SD2N	150-SD3N
Rated Current	[A]	90	110	140	180	210	260	320	361	420	520
Voltage	[V AC]	230...600	230...600	230...600	230...600	230...600	230...600	230...600	230...600	230...600	230...600
Short-circuit Current Ratings (SCCR)[2]											
Standard Fault SCCR at 600V											
Std. Available Fault	[kA]	10				18			30		
Max. Non-Time Delay Fuse	[A]	350	400	500	500	600	700	800	1000	1200	1200
Max. Time Delay Fuse	[A]	200	225	300	400	450	500	700	800	800	1000
Max. Inverse Time Circuit Breaker (CB)	[A]	350	300	400	500	600	700	800	1000	1200	1200
High Fault SCCR											
High Available Fault with Fuses at 600V	[kA]	100									
Max. Class J or L Time Delay Fuse	[A]	200	225	300	400	450	500	700	800	800	1000
High Available Fault with Circuit Breaker at 480V	[kA]	65									
Max. Inverse Time CB (Bul. 140G required)[3]	[A]	350	300	400	400	600	700	800	1000	1200	1200
Bul. 140G MCCB Frame Size		K				M			N		
Branch Protection Reference[2]											
Inverse Time Circuit Breaker Selections[1]											
35 kA at 600V Maximum		140G-K6F3-D	140G-K6F3-D	140G-K6F3-D	140G- M6F3-D	140G- M6F3-D	140G- M6F3-D	140G- M6F3-D	—	—	—
50 kA at 600V Maximum		—	—	—	—	—	—	—	140G- N6H3-E[4]	140G-N6H3-E12	140G-N6H3-E12
65 kA at 480V Maximum[3]		140G-K6F3-D	140G-K6F3-D	140G-K6F3-D	140G-K6F3-D	140G-M6F3-D	140G-M6F3-D	140G-M6F3-D	140G- N6H3-E12[4]	140G-N6H3-E12	140G-N6H3-E12
Fused Disconnect Selections, For Use With Non-Time Delay Fuses		194R-J200-1753	194R-J400-1753	194R-J400-1753	194R-J400-1753	194R-J600-1753	194R-J600-1753	194R-L800-1753	—	—	—
Bypass Contactor Reference [3] [5]											
AC-3 Rated per UL/CSA[6], Standard Fault SCCR											
Short-circuit current ratings @ 600V with:[1]		100-C97	100-E116	100-E146	100-E190	100-E265	100-E265	100-E305	100-E460	100-E460	100-E860
Standard Available Fault	[kA]	10				18			30		
Max. Non-Time Delay Fuse	[A]	350 A	250 A	350 A	450 A	600 A	700 A	800 A	1000 A	1000 A	1200 A
High Fault SCCR											
Short-circuit current ratings with:[1]		100-C97	100-E116	100-E146	100-E190	100-E265	100-E265	100-E305	100-E370	100-E460	100-E750
High Available Fault with Fuses at 600V	[kA]	100									
Max. Class J or Class L Time Delay Fuse	[A]	120 A	200 A	200 A	400 A	450 A	500 A	600 A	600 A	600 A	1200 A

(1) For complete catalog numbers, see the product directory: rok.auto.
(2) Always refer to local codes for proper selection of branch circuit components.
(3) Circuit Breaker must be of the designated 140G Frame size for high fault short circuit ratings.
(4) Requires rating plug selection based on application; see the product directory: rok.auto.
(5) For the most up-to-date information, including voltage ratings other than 600V, see rok.auto/sccr.
(6) In IEC regulated regions when sizing the bypass contactor per AC-1 or AC-3 ratings, the short circuit rating of the bypass contactor must be similar to that of the SMC-50 controller.

Table 119 - Integrated Bypass Devices: Protection Device and Bypass Component Selection—Delta-connected Motor

Description	SMC-50 Cat. No.[1]						
	150-S108N	150-S135N	150-S201N	150-S251N	150-S317N	150-S361N	150-S480N
Rated Current [A]	187	234	348	435	549	625	831
Voltage	230...600V AC	230...600V AC	230...600V AC	230...600V AC	230...600V AC	230...600V AC	230...600V AC
Short-circuit Current Ratings (SCCR)[2]							
Standard Fault SCCR at 600V							
Std. Available Fault [kA]	10		18		30		42
Max. Non-Time Delay Fuse	600	700	1000	1200	1600	1600	1600
Max. Inverse Time Circuit Breaker (CB)	500	700	1000	1200	1600	1600	1200
High Fault SCCR							
High Available Fault with Fuses at 600V [kA]	70				69		
Max. Class J or L Time Delay Fuse	300	400	600	800	1000	1200	1600
High Available Fault with Circuit Breaker at 480V [kA]	Pending						
Max. Inverse Time CB (Bul. 140G required)[3]							
Bul. 140G MCCB Frame Size							
Branch Protection Reference[2]							
Inverse Time Circuit Breaker Selections[1]							
35 kA at 600V Maximum	140G- M6F3-D...	140G- M6F3-D...	–	–	–	–	–
50 kA at 600V Maximum	–	–	140G- N6H3-E...[4]	140G- N6H3-E12	140G-R12I3-E[4]	140G-R12I3-E[4]	140G-N6H3-E12
65 kA at 480V Maximum[3]	Pending						
Fused Disconnect Selections, For Use With Non-Time Delay Fuses	194R-J600-1753	194R-L800-1753	–	–	–	–	–

(1) For complete catalog numbers, see the product directory: rok.auto.
(2) Always refer to local codes for proper selection of branch circuit components.
(3) Circuit Breaker must be of the designated 140G Frame size for high fault short circuit ratings.
(4) Requires rating plug selection based on application; see the product directory: rok.auto.

Table 120 - Solid-state Devices: Protection Device and Bypass Component Selection—Delta-connected Motor

Description		SMC-50 Cat. No.[1]									
		150-SB1N	150-SB2N	150-SB3N	150-SB4N	150-SC1N	150-SC2N	150-SC3N	150-SD1N	150-SD2N	150-SD3N
Rated Current	[A]	155	190	242	311	363	450	554	625	727	900
Voltage	[V AC]	230...600	230...600	230...600	230...600	230...600	230...600	230...600	230...600	230...600	230...600
Short-circuit Current Ratings (SCCR)[2]											
Standard Fault SCCR at 600V											
Std. Available Fault	[kA]	18				30			42		
Max. Non-Time Delay Fuse	[A]	450	500	700	800	1000	1200	1600	1600	2000	2500
Max. Time Delay Fuse	[A]	300	400	500	600	800	1000	1200	1200	1600	2000
Max. Inverse Time Circuit Breaker (CB)	[A]	450	500	700	800	1000	1200	1600	1600	2000	2500
High Fault SCCR											
High Available Fault with Fuses at 600V	[kA]	65									
Max. Class J or L Time Delay Fuse	[A]	300	400	500	600	800	1000	1200	1200	1600	2000
High Available Fault with Circuit Breaker at 480V	[kA]	65									
Max. Inverse Time CB (Bul. 140G required)[3]	[A]	450	500	700	700	1000	1200	1200	–	–	–
Bul. 140G MCCB Frame Size		M				N			Pending		
Branch Protection Reference[2]											
Inverse Time Circuit Breaker Selections[1]											
35 kA at 600V Maximum		140G- K6F3-D	140G- M6F3-D	140G- M6F3-D	140G- M6F3-D	–	–	–	–	–	–
50 kA at 600V Maximum		–	–	–	–	140G- N6H3-E[4]	140G-N6H3-E12	140G-R12I3-E[4]	140G-R12I3-E[4]	140G-R12I3-E20	140G-R12I3-E25
65 kA at 480V Maximum[3]		140G-M6F3-D	140G-M6F3-D	140G-M6F3-D	140G-M6F3-D	140G- N6H3-E[4]	140G-N6H3-E12	140G-N6H3-E12	Pending		
Fused Disconnect Selections, For Use With Non-Time Delay Fuses		194R-J400-1753	194R-J400-1753	194R-J600-1753	194R-J600-1753	194R-L800-1753	–	–	–	–	–
Bypass Contactor Reference[2] [5]											
AC-3 Rated per UL/CSA[6], Standard Fault SCCR											
Short-circuit current ratings @ 600V with:[1]		100-E265	100-E265	100-E265	100-E305	100-E460	100-E460	100-E860	100-E860	100-E860	100-E1060
Standard Available Fault	[kA]	18				30			42		
Max. Non-Time Delay Fuse	[A]	450	500	700	800	1000	1000	1600	1600	2000	2000
High Fault SCCR											
Short-circuit current ratings with:[1]		100-E190	100-E190	100-E265	100-E305	100-E460	100-E460	100-E580	100-E750	100-E860	100-E1260
High Available Fault with Fuses at 600V	[kA]	65									
Max. Class J or Class L Time Delay Fuse	[A]	300	400	500	600	600	600	1200	1200	1600	1600

(1) For complete catalog numbers, see the product directory: rok.auto.
(2) Always refer to local codes for proper selection of branch circuit components.
(3) Circuit Breaker must be of the designated 140G Frame size for high fault short circuit ratings. Other circuit breakers pending.
(4) Requires rating plug selection based on application; see the product directory: rok.auto.
(5) For the most up-to-date information, including voltage ratings other than 600V, see rok.auto/sccr.
(6) In IEC regulated regions when sizing the bypass contactor per AC-1 or AC-3 ratings, the short circuit rating of the bypass contactor must be similar to that of the SMC-50 controller.

Table 121 - SMC-50 Controller Enclosure Requirements

Enclosure Ratings		
Standard Device Rating:		IP00 (NEMA Open Type)
Minimum Required Enclosure:		IP23 (NEMA Type 1)
Recommended Enclosure:(1)		IP54 (NEMA Type 12)
Ambient temperature range (open air) or internal enclosure temperature range without derating:	Internal Bypass	-20...+50 °C (-4...+122 °F)
	Solid-state	-20...+40 °C (-4...+104 °F)
Orientation and Clearance		
Mounting Orientation:		Vertical ONLY
Minimum Clearance:	Horizontal	0 cm (0 in.)
	Vertical	15 cm (6 in.)

(1) See Table 122 for minimum enclosure size.

Typical Wiring Diagrams

Figure 20 - Typical Power Wiring Diagrams

Diagrams per NEMA Symbology

SMC-50 controller with internal bypass

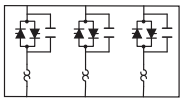

SMC-50 solid-state controller

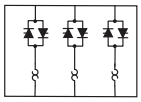

Line connection with isolation contactor (default mode)

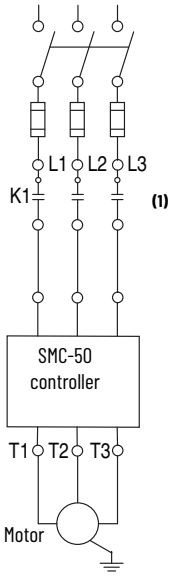

Inside-the-Delta connection with isolation contactor (optional mode)

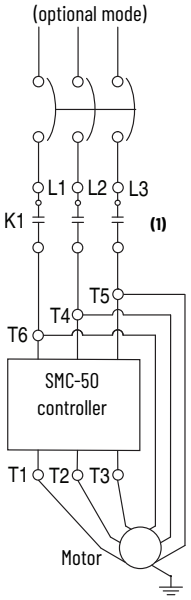

Delta connection with shorted SCR protection (optional mode)

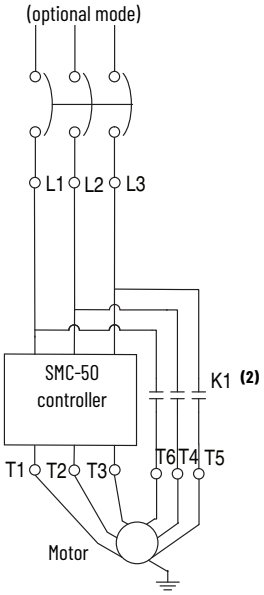

Diagrams per IEC Symbology

SMC-50 controller with internal bypass

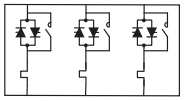

SMC-50 solid-state controller

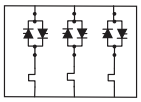

Line connection with isolation contactor (default mode)

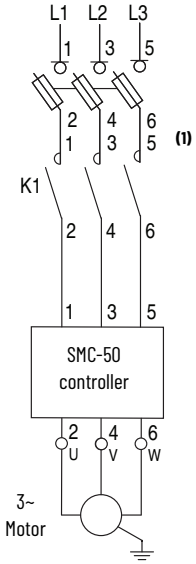

Inside-the-Delta connection with isolation contactor (optional mode)

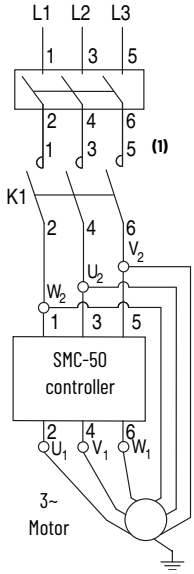

Delta connection with shorted SCR protection (optional mode)

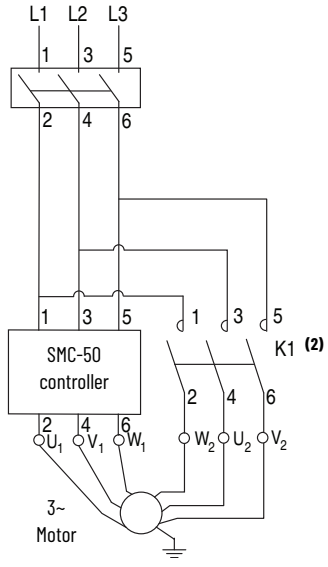

Note	Information
1	Contactor must be fully rated for motor Hp/kW and FLA.
2	For North American applications, size the contactor according to the motor Hp and FLA. For IEC applications, size the contactor according to the motor AC-1 or AC-3 rating. the short-circuit current rating of the contactor must be similar to that of the SMC-50 controller.

Typical Control Wiring Diagrams

Figure 21 - Typical Control Wiring for Standard 3-Wire Control—DC Inputs, No DPI Control

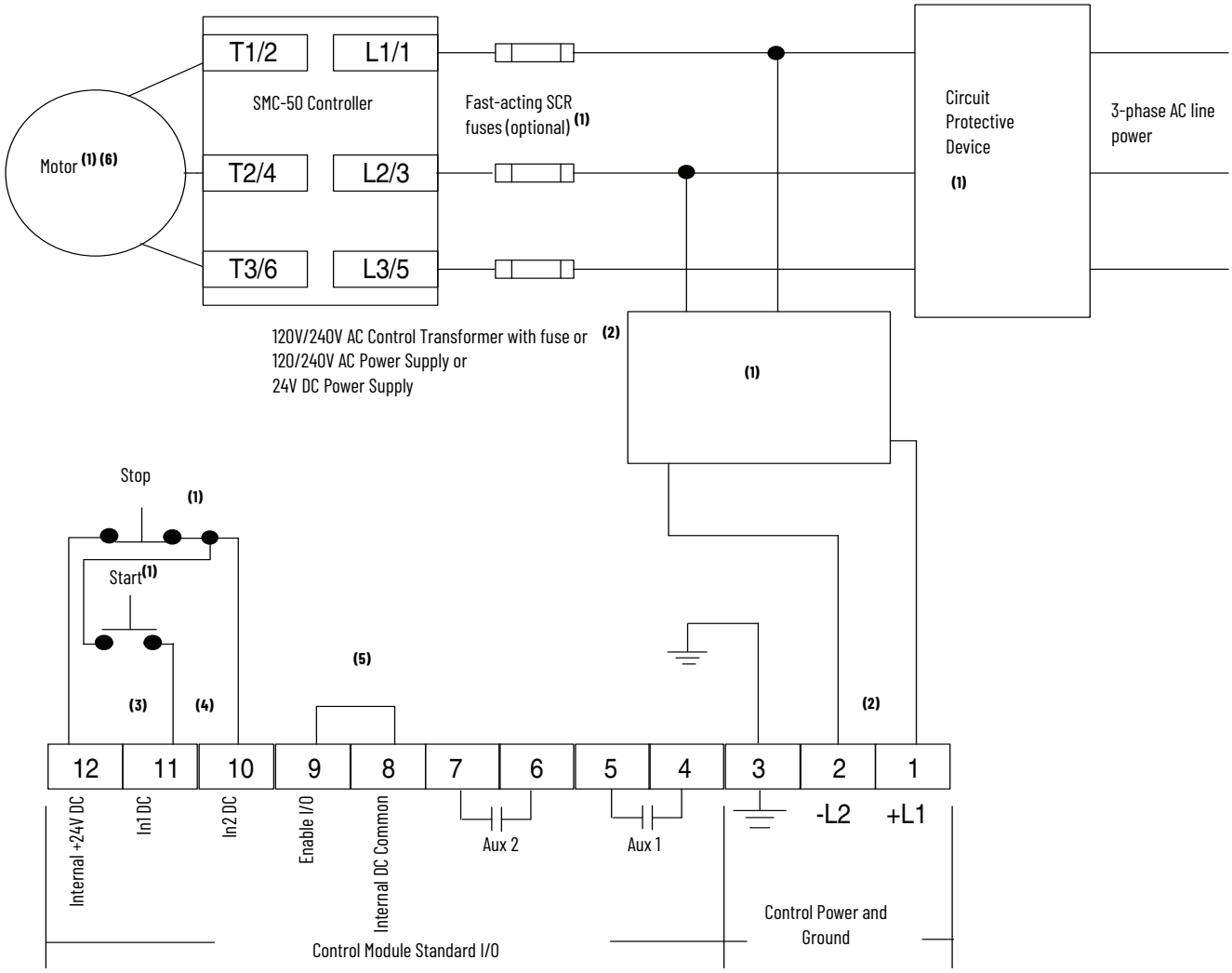

Note	Information
1	Customer supplied
2	See the controller nameplate to verify control power input ratings (100...240V AC or 24V DC)
3	Terminal 11 (In 1 DC) 24V DC input configured for START input using Parameter 56
4	Terminal 10 (In 2 DC) 24V DC input configured for COAST, STOP option, etc. using Parameter 57
5	A customer-supplied jumper is required to enable standard I/O operation.
6	Due to current leakage through an SCR in the OFF state (controller stopped), some form of off-stream line power isolation is recommended if maintenance is required on the motor. See Figure 20 for details

The controller generates an I/O configuration fault if any input is configured for START or SLOW speed and no input is selected for COAST or STOP.

In addition to a small amount of leakage current flowing through an SCR in the off-state, failure of one or more solid-state power switching components allows uncontrolled current to flow to the motor winding(s). This could potentially result in overheating or damage to the motor. To help prevent potential personal injury or equipment damage, we recommend that you install an isolation contactor or shunt trip-type circuit breaker capable of interrupting the motor locked rotor current on the line side of the SMC-50 controller. Coordinate operation of the isolation device by configuring using one of the SMC-50 controller auxiliary contacts configured to NORMAL.

Figure 22 - Typical Control Wiring for 2-Wire Control with Stopping Capability—DC Inputs, No DPI Control

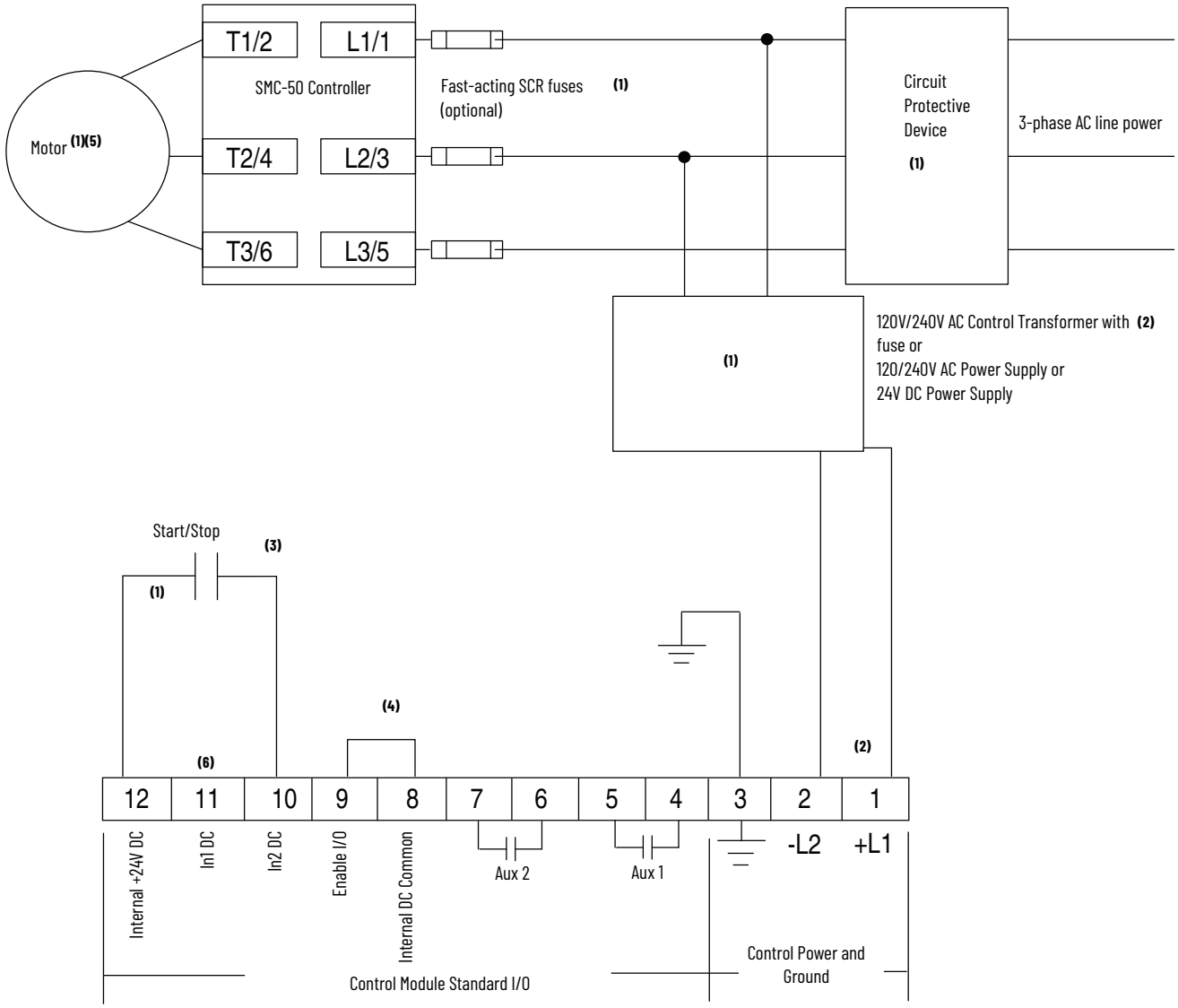

Note	Information
1	Customer supplied
2	See the controller nameplate to verify control power input ratings (100...240V AC or 24V DC)
3	Terminal 10 (In 2 DC) 24V DC N.O. input is configured for start/stop or start/coast using Parameter 57 (contact closed start initiated, contact open, stop initiated). When using start/stop or start/coast, you **must** use a N.O. input contact
4	A customer-supplied jumper is required to enable controller standard I/O operation
5	Due to current leakage through an SCR in the OFF state (controller stopped), some form of upstream line power isolation is recommended if maintenance is required on the motor. See Figure 20 for details
6	Configure In1 (Input 1—Parameter 56) to "Disable"

The controller generates an I/O configuration fault if any input is configured for START or SLOW speed and no input is selected for COAST or STOP.

In addition to a small amount of leakage current flowing through an SCR in the off-state, failure of one or more solid-state power switching components allows uncontrolled current to flow to the motor winding(s). This could potentially result in overheating or damage to the motor. To help prevent potential personal injury or equipment damage, the installation of an isolation contactor or shunt trip-type circuit breaker capable of interrupting the motor's locked rotor current on the line side of the SMC-50 controller is recommended. Operation of the isolation device should be coordinated using one of the SMC-50 controller Aux contacts configured to NORMAL.

Approximate Dimensions

Dimensions are in inches (mm) unless otherwise noted. Dimensions are not to be used for manufacturing purposes.

The guidelines in Table 122 result from the open design of the SMC-50 controller and the minimum clearance requirements of 150 mm (6 in.) above and below the controller.

Table 122 - SMC-50 Controller Minimum Enclosure Size

SMC-50 Controller with Internal Bypass			
Catalog Number	mm (in.)(1)		
	Width	Height	Depth
150-S108... / 150-S135...	609.6 (24.0)	762.0 (30.0)	304.8 (12.0)
150-S201... / 150-S251...	762.0 (30.0)	965.2 (38.0)	355.6 (14.0)
150-S317... / 150-S361... / 150-S480...	914.4 (36.0)	1295.4 (51.0)	355.6 (14.0)

Solid-state SMC-50 Controller				
Catalog Number	Configuration	mm (in.)(1)		
		Width	Height	Depth
150-SB...	Line/Wye	609.6 (24.0)	762.0 (30.0)	304.8 (12.0)
	Inside-the-Delta	762.0 (30.0)	965.2 (38.0)	355.6 (14.0)
150-SC...	All	762.0 (30.0)	965.2 (38.0)	355.6 (14.0)
150-SD...	All	914.4 (36.0)	1295.4 (51.0)	355.6 (14.0)

(1) Actual enclosure size changes based on heat dissipation, duty cycle, ambient temperature, and external cooling. See the user manual, publication 150-UM011, for more information.

Controllers with Internal Bypass

When mounted in an enclosure, maintain a minimum of 6.0 inches (152.4 mm) clearance above and below the SMC-50 controller. Side-to-side clearance is not required.

Figure 23 - 108/135 A Controller with Internal Bypass: Without Terminal Covers

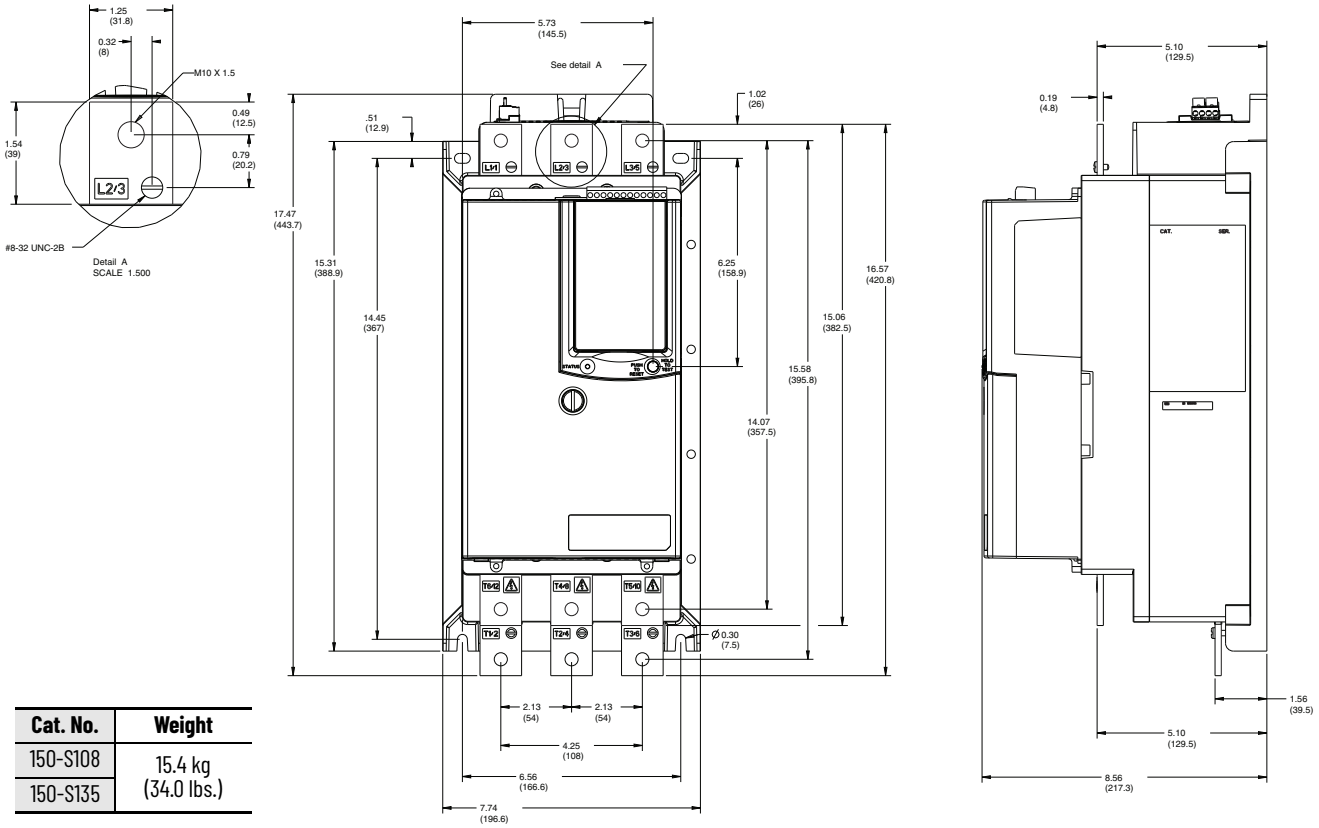

Cat. No.	Weight
150-S108	15.4 kg (34.0 lbs.)
150-S135	

When mounted in an enclosure, maintain a minimum of 6.0 inches (152.4 mm) clearance above and below the SMC-50 controller. Side-to-side clearance is not required.

Figure 24 - 108/135 A Controller with Internal Bypass: With Terminal Covers and MOV Options

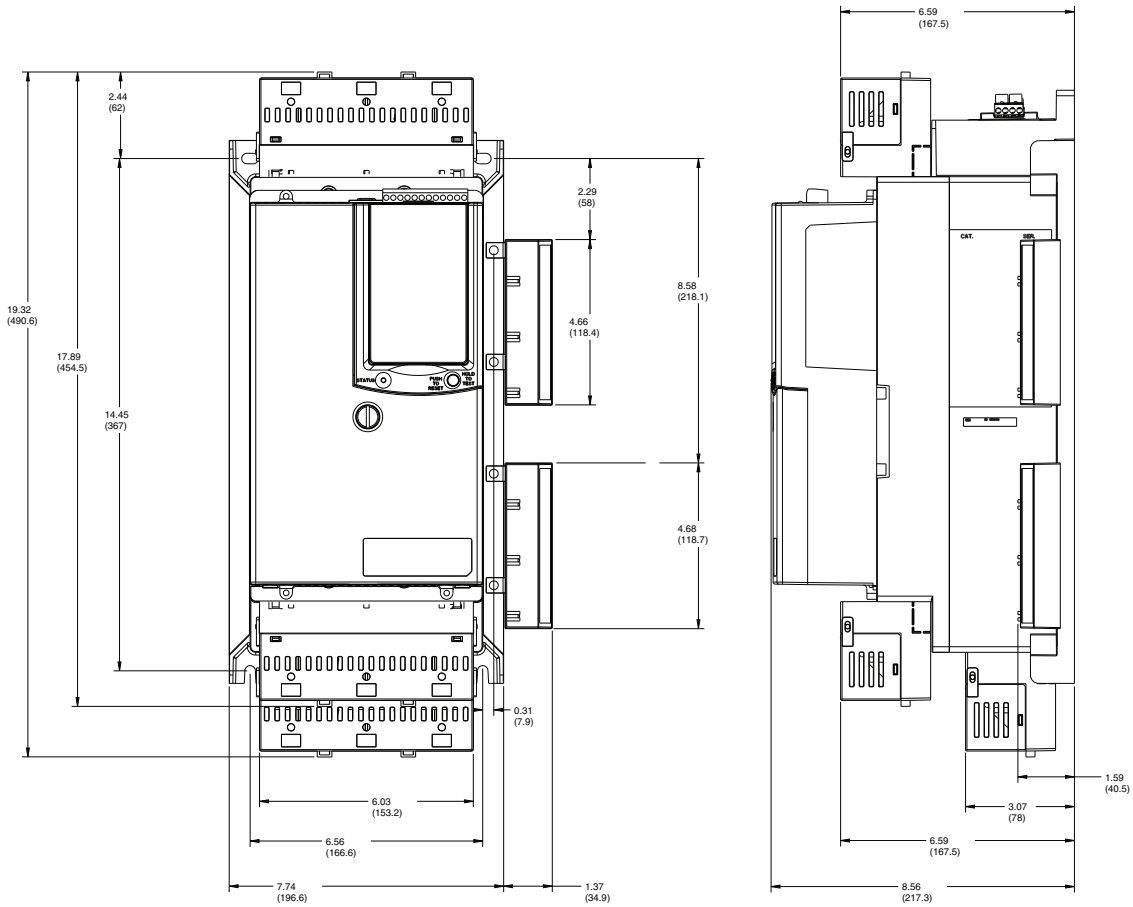

Figure 25 - 201/251 A Controller with Internal Bypass: Without Terminal Covers

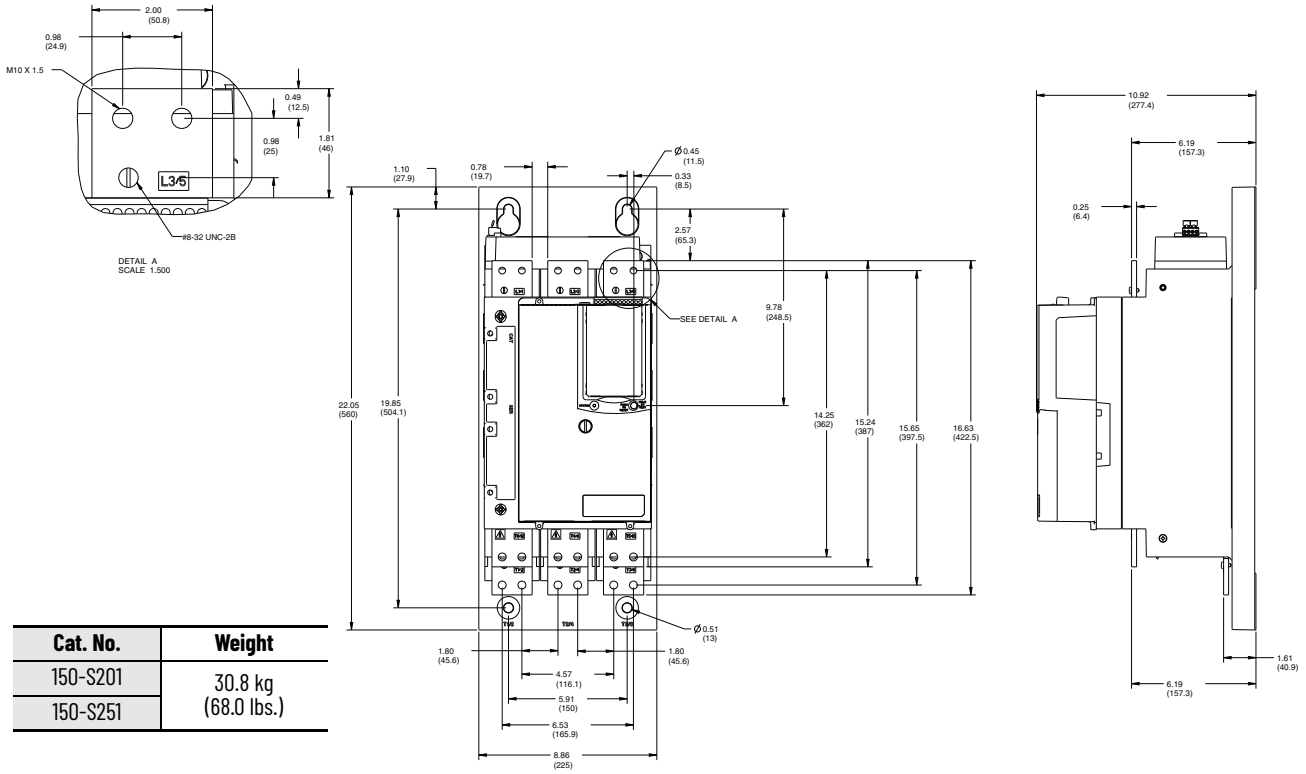

Cat. No.	Weight
150-S201	30.8 kg (68.0 lbs.)
150-S251	

When mounted in an enclosure, maintain a minimum of 6.0 inches (152.4 mm) clearance above and below the SMC-50 controller. Side-to-side clearance is not required.

Figure 26 - 201/251 A Controller with Internal Bypass: With Terminal Covers and MOV Options

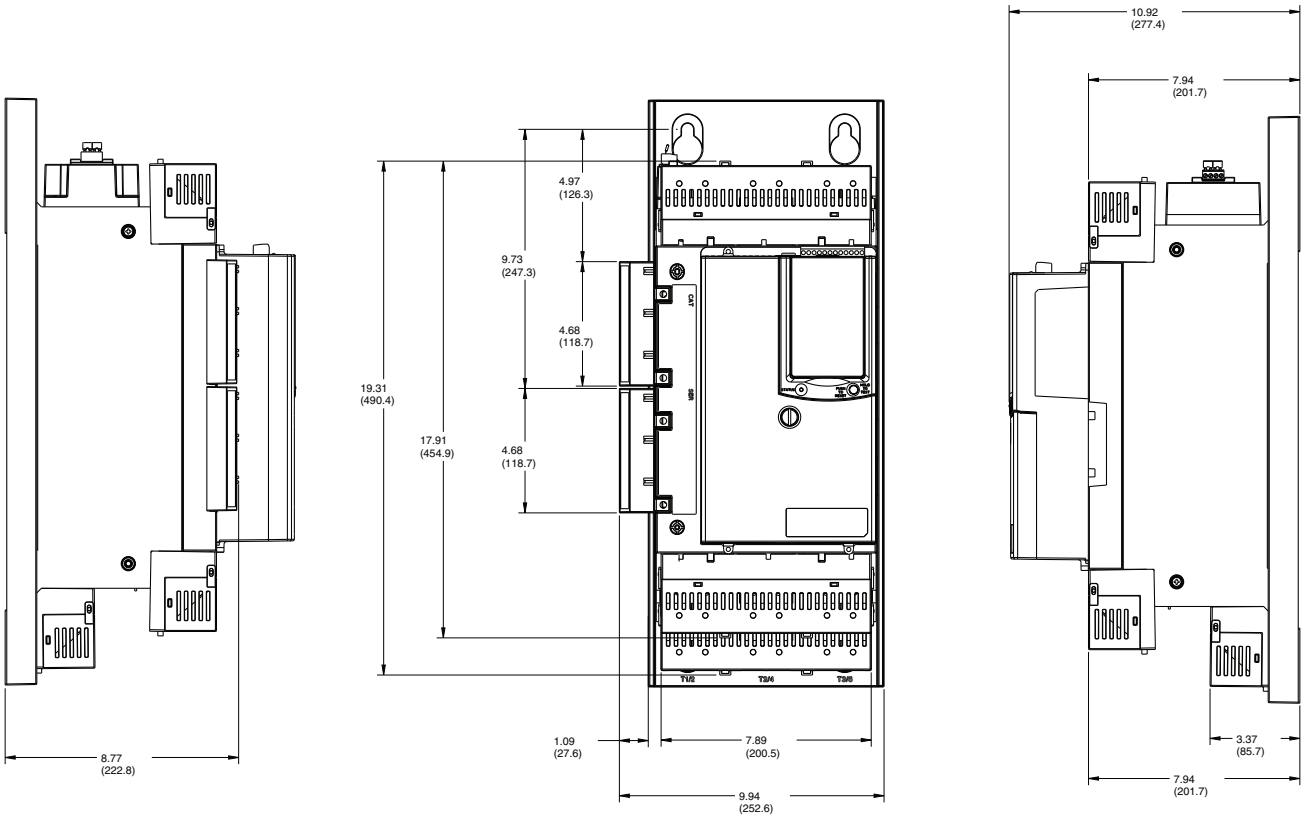

Figure 27 - 317/361/480 A Controller with Internal Bypass: Without Terminal Covers

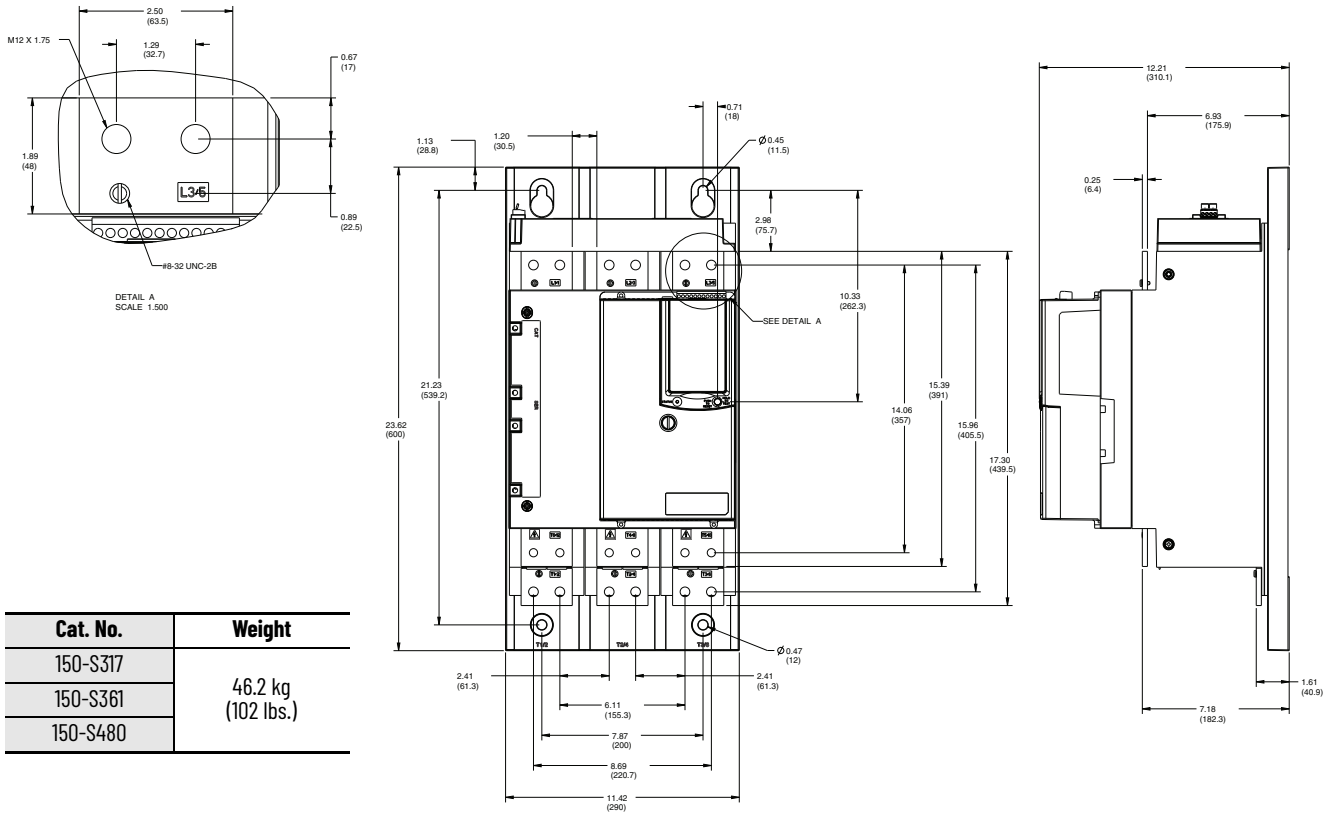

Cat. No.	Weight
150-S317	46.2 kg (102 lbs.)
150-S361	
150-S480	

When mounted in an enclosure, maintain a minimum of 6.0 inches (152.4 mm) clearance above and below the SMC-50 controller. Side-to-side clearance is not required.

Figure 28 - 317/361/480 A Controller with Internal Bypass: With Terminal Covers and MOV Options

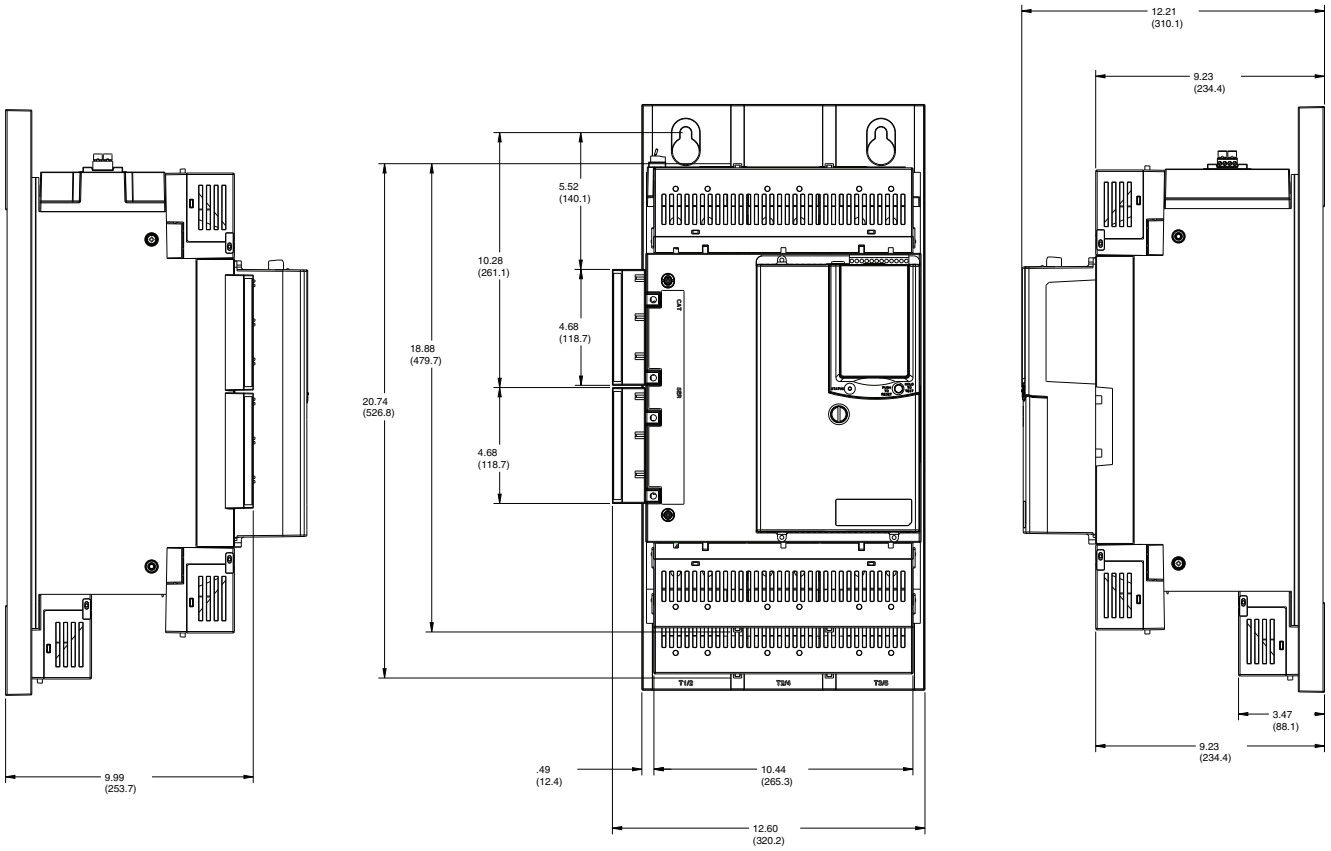

Solid-state Controllers

When mounted in an enclosure, maintain a minimum of 6.0 inches (152.4 mm) clearance above and below the SMC-50 controller. Side-to-side clearance is not required.

Figure 29 - Cat. Nos. 150-SB1...SB4 Solid-state Controller: Without Terminal Covers

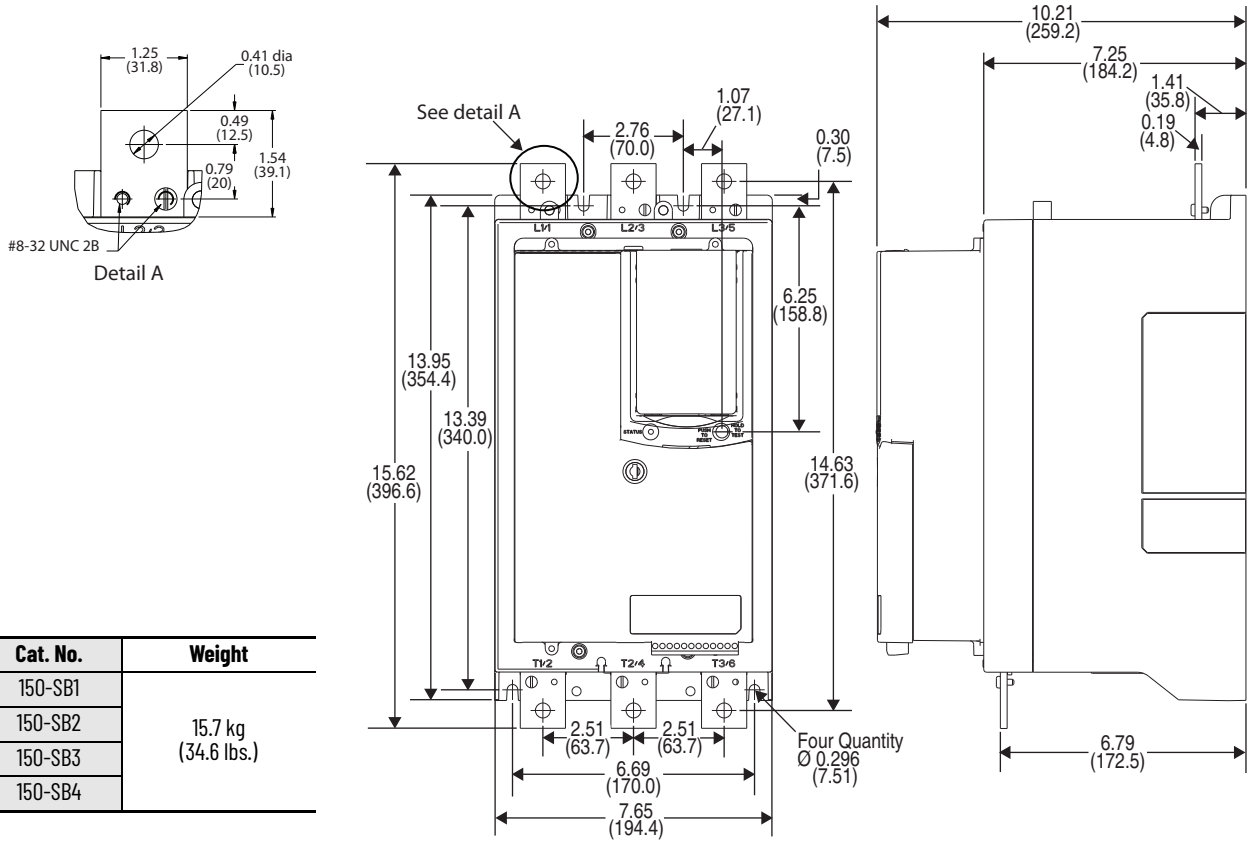

Cat. No.	Weight
150-SB1	15.7 kg (34.6 lbs.)
150-SB2	
150-SB3	
150-SB4	

When mounted in an enclosure, maintain a minimum of 6.0 inches (152.4 mm) clearance above and below the SMC-50 controller. Side-to-side clearance is not required.

Figure 30 - Cat. Nos. 150-SB1...SB4 Solid-state Controller: With Terminal Covers and MOV Options

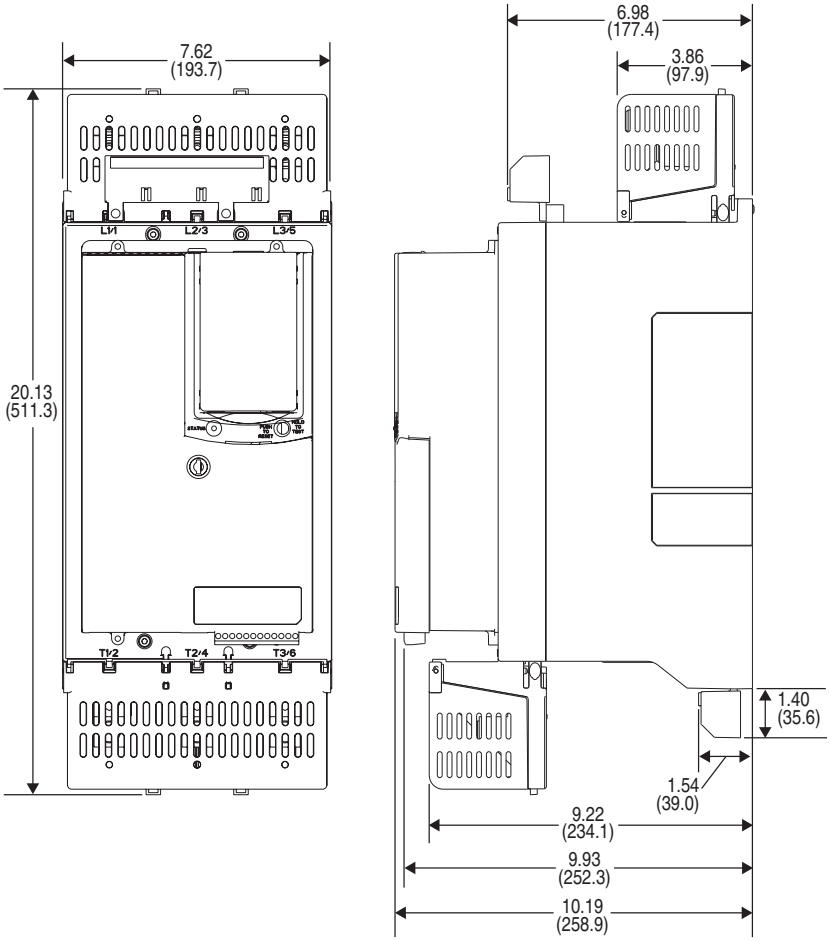

When mounted in an enclosure, maintain a minimum of 6.0 inches (152.4 mm) clearance above and below the SMC-50 controller. Side-to-side clearance is not required.

Figure 31 - Cat. Nos. 150-SC1...SC3 Solid-state Controller

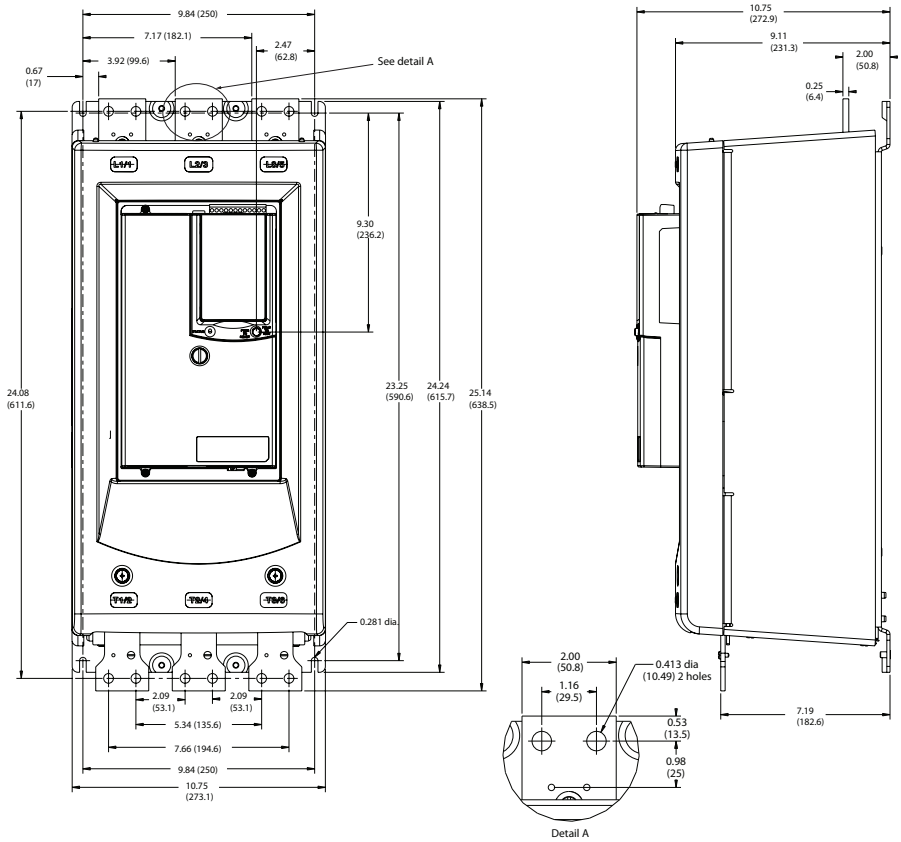

Cat. No.	Weight
150-SC1	47.6 kg (105 lbs.)
150-SC2	
150-SC3	

When mounted in an enclosure, maintain a minimum of 6.0 inches (152.4 mm) clearance above and below the SMC-50 controller. Side-to-side clearance is not required.

Figure 32 - Cat. Nos. 150-SC1...SC3 Solid-state Controller: With Lugs, Bypass Kit, and MOV Options

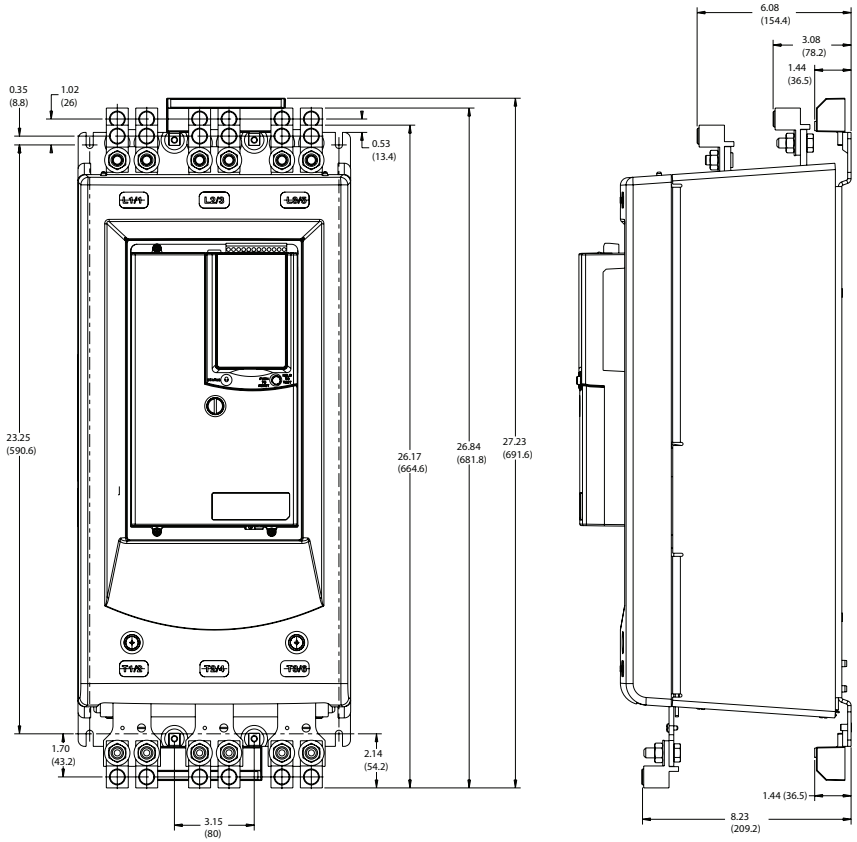

Figure 33 - Cat. Nos. 150-SD1...SD3 Solid-state Controller

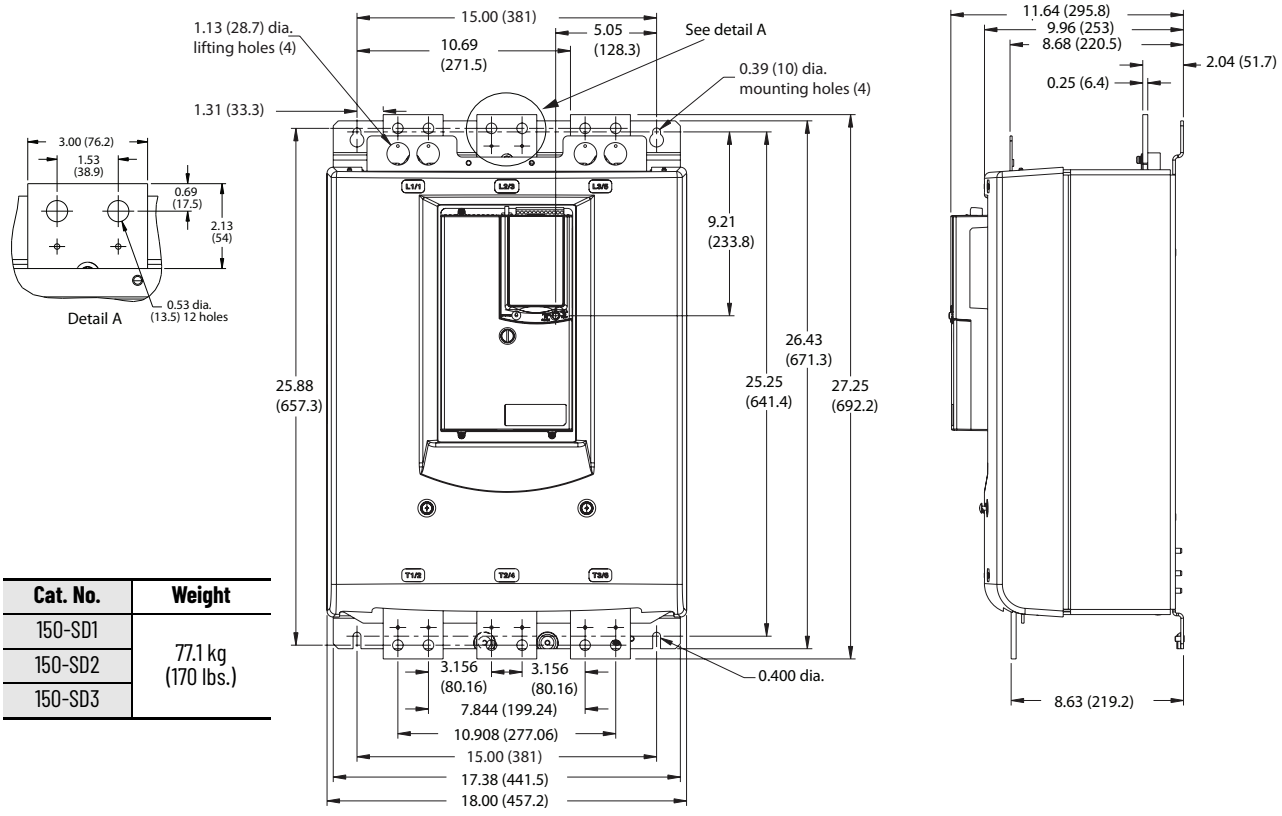

Cat. No.	Weight
150-SD1	77.1 kg (170 lbs.)
150-SD2	
150-SD3	

When mounted in an enclosure, maintain a minimum of 6.0 inches (152.4 mm) clearance above and below the SMC-50 controller. Side-to-side clearance is not required.

Figure 34 - Cat. Nos. 150-SD1...SD3 Solid-state Controller: With Lugs, Bypass Kit, and MOV Options

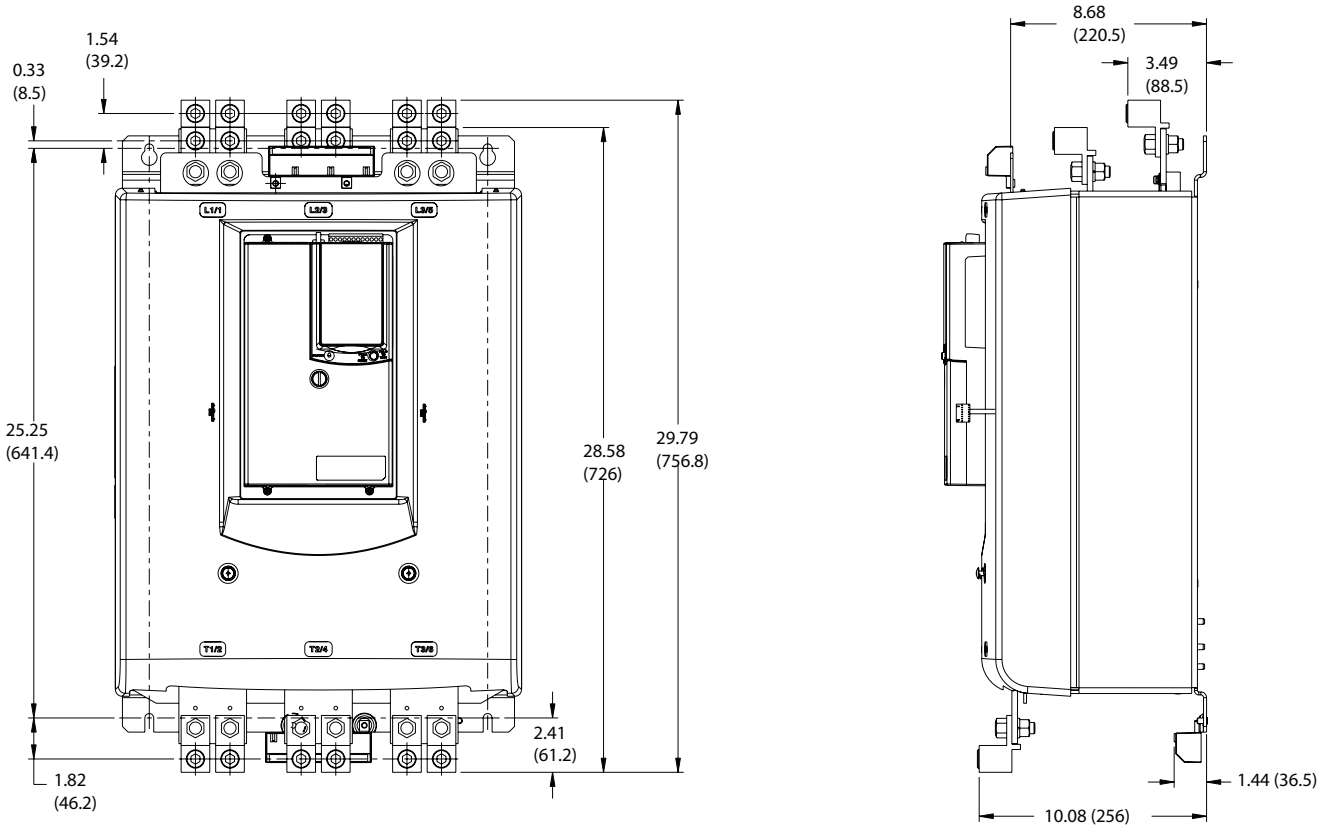

This section describes several of the myriad applications for SMC controllers. It also details the basis for selecting a control method. Illustrations are included to help identify the application. Motor ratings are specified, but the ratings may vary in other typical applications.

Applications and starting methods that are ideal for the SMC controllers include the following.

- Fans
  - Soft start
  - Linear acceleration
- Pumps
  - Soft start
  - Pump control
  - Linear acceleration
  - Pump cavitation
- Conveyors
  - Soft start
  - Linear acceleration
- Centrifuges
  - Smart motor braking
  - Current limit
- Shock loads
  - Rock crushers
  - Hammer Mills
  - Bark Hogs
- High-inertia loads
  - Hammer mill with current limit
  - Shredder with soft start
  - Bandsaw with soft start
  - Ball mill with current limit
- Smart Motor Braking
  - Bandsaw
  - Centrifuge
  - Hammermill
  - Ball mill
- Compressors
  - Soft start
- Tumblers
  - Linear acceleration
  - Soft start
- Short-term slow speed
- Resistive loads

Reduced Voltage Starting

There are two primary reasons for using reduced voltage when starting a motor:

- Limit line disturbances
- Reduce excessive torque to the driven equipment

When starting a motor at full voltage, the current drawn from the power line is typically 600% of normal full load current. This high current flows until the motor is almost up to speed and then decreases, as shown in Figure 35. This could cause line voltage dips and brown-outs.

Figure 35 - Full-load Current vs. Speed

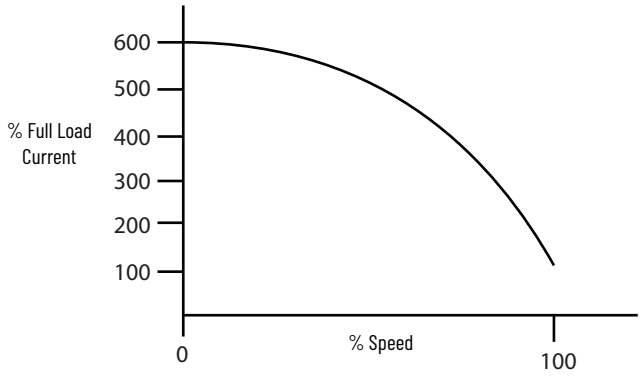

In addition to high starting currents, the motor also produces starting torques that are higher than full-load torque. The magnitude of the starting torque depends on the motor design. NEMA publishes standards for torques and currents for motor manufacturers to follow. Typically, a NEMA Design B motor has a locked rotor or starting torque that is approximately180% of full-load torque.

In many applications, this starting torque can cause excessive mechanical damage such as belt, chain, or coupling breakage.

All forms of reduced voltage starting affect the motor current and torque characteristics. When you apply a reduced voltage to a motor at rest, the current drawn by the motor is reduced. The torque produced by the motor is a factor of approximately the square of the percentage of voltage applied.

For example, if 50% voltage is applied to the motor, a starting torque of approximately 25% of the normal starting torque is produced. In the previous full voltage example, the NEMA Design B motor had a starting torque of 180% of full load torque. With only 50% voltage applied, this equates to approximately 45% of full load torque. Table 123 shows the typical relationship of voltage, current, and torque for a NEMA Design B motor.

Table 123 - Typical Voltage, Current and Torque Characteristics for NEMA Design B Motors

Starting Method	% Voltage at Motor Terminals	Motor Starting Current as % of:		Line Current as % of:		Motor Starting Torque as % of:	
		Locked Rotor Current	Full Load Current	Locked Rotor Current	Full Load Current	Locked Rotor Torque	Full Load Torque
Full Voltage	100	100	600	100	600	100	180
Autotransformer							
80% tap	80	80	480	64	384	64	115
65% tap	65	65	390	42	252	42	76
50% tap	50	50	300	25	150	25	45
Part Winding	100	65	390	65	390	50	90
Wye-Delta	100	33	198	33	198	33	60
Solid-state	0...100	0...100	0...100	0...100	0...100	0...100	0...100

With the wide range of torque characteristics for the various starting methods, selecting an electromechanical reduced voltage starter becomes more application dependent. In many instances, available torque becomes the key factor in the selection processes.

Solid-state Starters with SCRs

In solid-state starters, silicon-controlled rectifiers (SCRs) (see Figure 36) are used to control the voltage output to the motor. An SCR allows current to flow in one direction only. The amount of conduction of an SCR is controlled by the pulses received at the gate of the SCR. When two SCRs are connected back to back (see Figure 37), the AC power to a load can be controlled by changing the firing angle of the line voltage (see Figure 38) during each half cycle. By changing the angle, it is possible to increase or decrease the voltage and current to the motor. The SMC-50 controller incorporates a microprocessor to control the firing of the SCRs. Six SCRs are used in the power section to provide full cycle control of the voltage and current. The voltage and current can be slowly and steplessly increased to the motor.

Figure 36 - Silicon-controlled Rectifier

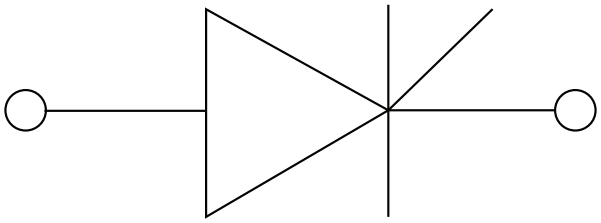

Figure 37 - Typical Wiring Diagram for SCRs

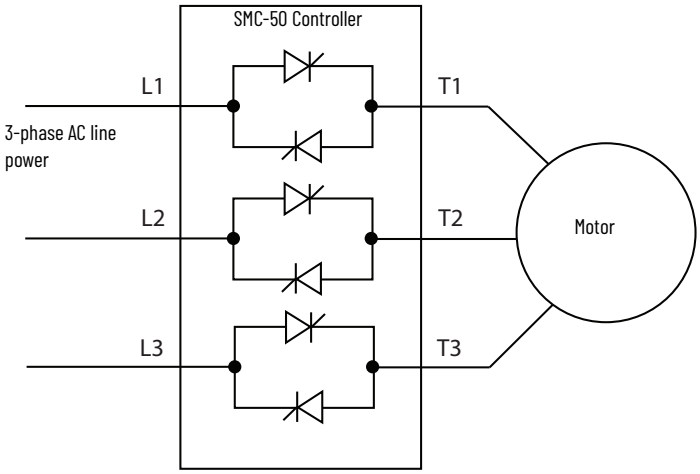

Figure 38 - Different Firing Angles (Single-phase Simplification)

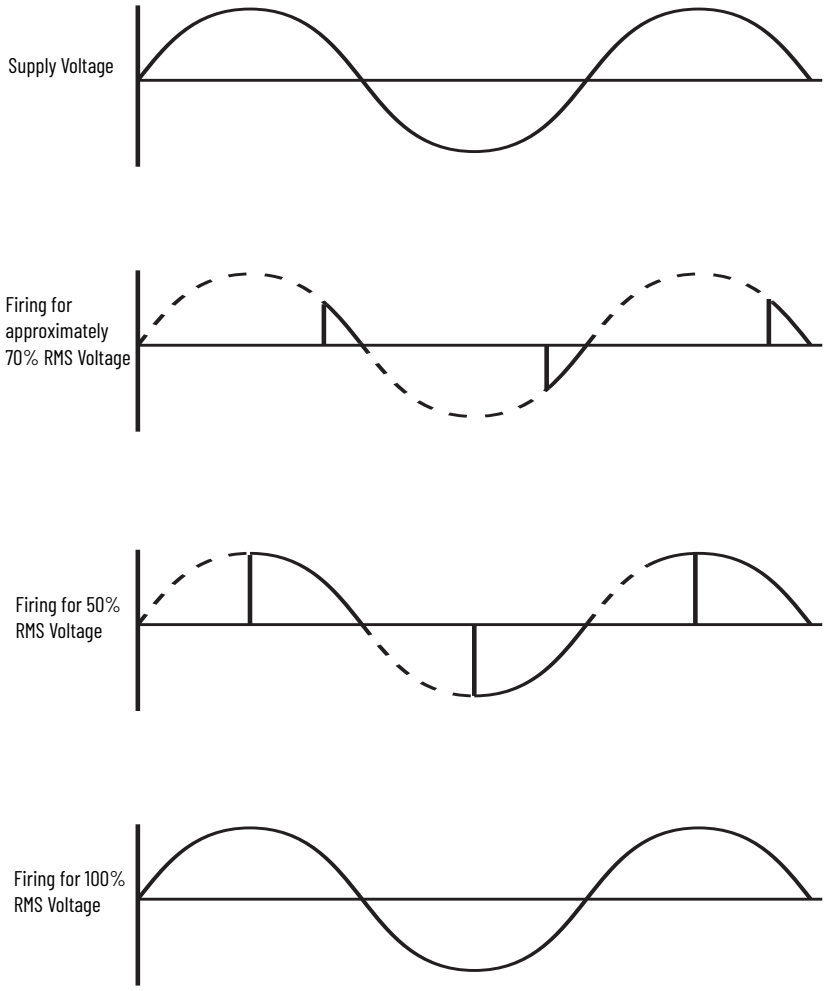

Industry Applications Matrix

Use this section to identify possible SMC controller applications. This section contains an application matrix that identifies starting characteristics and typical stopping features that may be used in various applications.

Table 124 - Mining and Metals[1]

Application	Soft Start			Current Limit			Kickstart			Soft Stop			Pump Control			Accu- Stop			Smart Motor Brake			Preset Slow Speed			Slow Speed with Brake			Linear Speed Acceleration			Torque Control Start		
	3	F	50	3	F	50	3	F	50	3	F	50	3	F	50	3	F	50	3	F	50	3	F	50	3	F	50	3	F	50	3	F	50
Roller Mills	–	X	X	–	X	X	–	–	–	–	–	–	–	–	–	–	–	–	–	X	X	–	–	–	–	X	X	–	–	X	–	–	X
Hammermills	–	X	X	–	X	X	–	–	–	–	–	–	–	–	–	–	–	–	–	X	X	–	–	–	–	X	X	–	–	X	–	–	X
Roller Conveyors	–	X	X	–	–	–	–	–	–	–	X	X	–	–	–	–	–	–	–	–	–	–	–	–	–	–	–	–	–	X	–	–	X
Centrifugal Pumps	–	X	X	–	X	X	–	–	–	–	–	–	–	X	X	–	–	–	–	–	–	–	–	–	–	–	–	–	–	X	–	–	X
Fans	X	X	X	X	X	X	X	X	X	–	–	–	–	–	–	–	–	–	–	–	–	–	–	–	–	–	–	–	–	X	–	–	X
Tumbler	–	X	X	–	X	X	–	–	–	–	–	–	–	–	–	–	X	X	–	X	X	–	X	X	–	X	X	–	–	X	–	–	X
Rock Crusher	–	X	X	–	X	X	–	–	–	–	–	–	–	–	–	–	–	–	–	–	–	–	–	–	–	–	–	–	–	X	–	–	X
Dust Collector	–	X	X	–	X	X	–	–	–	–	–	–	–	–	–	–	–	–	–	–	–	–	–	–	–	–	–	–	–	X	–	–	X
Chillers	–	X	X	–	X	X	–	–	–	–	–	–	–	–	–	–	–	–	–	–	–	–	–	–	–	–	–	–	–	X	–	–	X
Compressor	X	X	X	X	X	X	–	–	–	–	–	–	–	–	–	–	–	–	–	–	–	–	–	–	–	–	–	–	–	X	–	–	X
Wire Draw Machine	–	X	X	–	X	X	–	X	X	–	–	–	–	–	–	–	–	–	–	–	–	–	–	–	–	–	–	–	–	X	–	–	X
Belt Conveyors	X	X	X	X	X	X	X	X	X	–	X	X	–	–	–	–	X	X	–	–	–	–	X	X	–	–	–	–	–	X	–	–	X
Shredder	–	X	X	–	X	X	–	–	–	–	–	–	–	–	–	–	–	–	–	–	–	–	–	–	–	–	–	–	–	X	–	–	X
Grinder	–	X	X	–	X	X	–	–	–	–	–	–	–	–	–	–	–	–	–	X	X	–	–	–	–	X	X	–	–	X	–	–	X
Slicer	–	X	X	–	X	X	–	X	X	–	–	–	–	–	–	–	–	–	–	–	–	–	–	–	–	–	–	–	–	X	–	–	X
Overload Conveyor	–	X	X	–	–	–	–	X	X	–	X	X	–	–	–	–	X	X	–	–	–	–	–	–	–	–	–	–	X	X	–	–	X

(1) Table Legend: 3= SMC-3 controller; F = SMC Flex controller; 50 = SMC-50 controller

Table 125 - Food Processing[1]

Application	Soft Start			Current Limit			Kickstart			Soft Stop			Pump Control			Accu- Stop			Smart Motor Brake			Preset Slow Speed			Slow Speed with Brake			Linear Speed Acceleration			Torque Control Start		
	3	F	50	3	F	50	3	F	50	3	F	50	3	F	50	3	F	50	3	F	50	3	F	50	3	F	50	3	F	50	3	F	50
Centrifugal Pumps	–	X	X	–	X	X	–	–	–	–	–	–	–	X	X	–	–	–	–	–	–	–	–	–	–	–	–	–	–	X	–	–	X
Palletizers	–	X	X	–	–	–	–	–	–	–	X	X	–	–	–	–	–	–	–	–	–	–	–	–	–	–	–	–	–	X	–	–	X
Mixers	–	X	X	–	X	X	–	X	X	–	–	–	–	–	–	–	–	–	–	–	–	–	X	X	–	–	–	–	–	X	–	–	X
Agitators	–	X	X				–	–	–	–	–	–	–	–	–	–	–	–	–	–	–	–	–	–	–	–	–	–	–	X	–	–	X
Centrifuges	–	–	–	–	X	X	–	–	–	–	–	–	–	–	–	–	–	–	–	X	X	–	–	–	–	X	X	–	–	X	–	–	X
Conveyors	X	X	X	X	X	X	X	X	X	–	X	X	–	–	–	–	X	X	–	–	–	–	–	–	–	–	–	–	–	X	–	–	X
Fans	X	X	X	X	X	X	–	–	–	–	–	–	–	–	–	–	–	–	–	–	–	–	–	–	–	–	–	–	–	X	–	–	X
Bottle Washers	–	X	X	–	–	–	–	–	–	–	X	X	–	–	–	–	–	–	–	–	–	–	–	–	–	–	–	–	–	X	–	–	X
Compressors	–	X	X	–	X	X	–	–	–	–	–	–	–	–	–	–	–	–	–	–	–	–	–	–	–	–	–	–	–	X	–	–	X
Hammermill	–	X	X	–	X	X	–	–	–	–	–	–	–	–	–	–	–	–	–	–	–	–	–	–	–	–	–	–	–	X	–	–	X
Separators	–	X	X	–	X	X	–	–	–	–	–	–	–	–	–	–	–	–	–	–	–	–	–	–	–	–	–	–	–	X	–	–	X
Dryers	–	X	X	–	X	X	–	–	–	–	–	–	–	–	–	–	–	–	–	–	–	–	–	–	–	–	–	–	–	X	–	–	X
Slicers	–	X	X	–	X	X	–	X	X	–	–	–	–	–	–	–	–	–	–	–	–	–	–	–	–	–	–	–	–	X	–	–	X

(1) Table Legend: 3= SMC-3 controller; F = SMC Flex controller; 50 = SMC-50 controller

Table 126 - Pulp and Paper[1]

Application	Soft Start			Current Limit			Kickstart			Soft Stop			Pump Control			Accu- Stop			Smart Motor Brake			Preset Slow Speed			Slow Speed with Brake			Linear Speed Acceleration			Torque Control Start		
	3	F	50	3	F	50	3	F	50	3	F	50	3	F	50	3	F	50	3	F	50	3	F	50	3	F	50	3	F	50	3	F	50
Compressors	X	X	X	X	X	X	–	–	–	–	–	–	–	–	–	–	–	–	–	–	–	–	–	–	–	–	–	–	–	X	–	–	X
Conveyors	X	X	X	X	X	X	X	X	X	X	X	X	–	–	–	–	X	X	–	–	–	–	X	X	–	–	–	–	–	X	–	–	X
Trolleys	–	X	X	–	–	–	–	–	–	–	X	X	–	–	–	–	X	X	–	–	–	–	X	X	–	–	–	–	–	X	–	–	X
Dryers	X	X	X	X	X	X	–	–	–	–	–	–	–	–	–	–	–	–	–	–	–	–	–	–	–	–	–	–	–	X	–	–	X
Agitators	–	X	X	–	X	X	–	–	–	–	–	–	–	–	–	–	–	–	–	–	–	–	–	–	–	–	–	–	–	X	–	–	X
Centrifugal Pumps	–	X	X	–	X	X	–	–	–	–	–	–	–	X	X	–	–	–	–	–	–	–	–	–	–	–	–	–	–	X	–	–	X
Mixers	–	X	X	–	X	X	–	–	–	–	–	–	–	–	–	–	–	–	–	–	–	–	–	–	–	–	–	–	–	X[2]	–	–	X
Fans	X	X	X	X	X	X	–	X	X	–	–	–	–	–	–	–	–	–	–	–	–	–	–	–	–	–	–	–	–	X	–	–	X
Re-Pulper	–	X	X	–	X	X	–	X	X	–	–	–	–	–	–	–	–	–	–	–	–	–	–	–	–	–	–	–	–	X	–	–	X
Shredder	–	X	X	–	X	X	–	–	–	–	–	–	–	–	–	–	–	–	–	–	–	–	–	–	–	–	–	–	X	X	–	–	X

(1) Table Legend: 3= SMC-3 controller; F = SMC Flex controller; 50 = SMC-50 controller
(2) Unloaded

Table 127 - Petrochemical[1]

Application	Soft Start			Current Limit			Kickstart			Soft Stop			Pump Control			Accu- Stop			Smart Motor Brake			Preset Slow Speed			Slow Speed with Brake			Linear Speed Acceleration			Torque Control Start		
	3	F	50	3	F	50	3	F	50	3	F	50	3	F	50	3	F	50	3	F	50	3	F	50	3	F	50	3	F	50	3	F	50
Centrifugal Pumps	–	X	X	–	X	X	–	–	–	–	–	–	–	X	X	–	–	–	–	–	–	–	–	–	–	–	–	–	–	X	–	–	X
Extruders	–	X	X	–	X	X	–	–	–	–	–	–	–	–	–	–	–	–	–	–	–	–	–	–	–	–	–	–	–	X	–	–	X
Screw Conveyors	–	X	X	–	X	X	–	X	X	–	–	–	–	–	–	–	–	–	–	–	–	–	–	–	–	–	–	–	–	X	–	–	X
Mixers	–	X	X	–	X	X	–	–	–	–	–	–	–	–	–	–	–	–	–	–	–	–	X	X	–	–	–	–	–	X	–	–	X
Agitators	–	X	X	–	X	X	–	–	–	–	–	–	–	–	–	–	–	–	–	–	–	–	–	–	–	–	–	–	–	X	–	–	X
Compressors	–	X	X	–	X	X	–	–	–	–	–	–	–	–	–	–	–	–	–	–	–	–	–	–	–	–	–	–	–	X	–	–	X
Fans	X	X	X	X	X	X	X	X	X	–	–	–	–	–	–	–	–	–	–	–	–	–	–	–	–	–	–	–	–	X	–	–	X
Ball Mills	–	X	X	–	X	X	–	–	–	–	–	–	–	–	–	–	X	X	–	X	X	–	–	–	–	X	X	–	–	X	–	–	X
Centrifuge	–	X	X	–	X	X	–	–	–	–	–	–	–	–	–	–	–	–	–	X	X	–	–	–	–	X	X	–	–	X	–	–	X

(1) Table Legend: 3= SMC-3 controller; F = SMC Flex controller; 50 = SMC-50 controller

Table 128 - Transportation and Machine Tool[1]

Application	Soft Start			Current Limit			Kickstart			Soft Stop			Pump Control			Accu- Stop			Smart Motor Brake			Preset Slow Speed			Slow Speed with Brake			Linear Speed Acceleration			Torque Control Start		
	3	F	50	3	F	50	3	F	50	3	F	50	3	F	50	3	F	50	3	F	50	3	F	50	3	F	50	3	F	50	3	F	50
Material Handling Conveyors	X	X	X	X	X	X	X	X	X	–	X	X	–	–	–	–	X	X	–	–	–	–	X	X	–	–	–	–	–	X	–	–	X
Ball Mills	–	X	X	–	X	X	–	–	–	–	–	–	–	–	–	–	X	X	–	X	X	–	X	X	–	X	X	–	–	X	–	–	X
Grinders	–	X	X	–	X	X	–	–	–	–	–	–	–	–	–	–	–	–	–	X	X	–	–	–	–	X	X	–	–	X	–	–	X
Centrifugal Pumps	–	X	X	–	X	X	–	–	–	–	–	–	–	X	X	–	–	–	–	–	–	–	–	–	–	–	–	–	–	X	–	–	X
Trolleys	–	X	X				–	–	–	–	X	X	–	–	–	–	X	X	–	–	–	–	X	X	–	–	–	–	–	X	–	–	X
Presses	–	X	X	–	X	X	–	–	–	–	–	–	–	–	–	–	–	–	–	X	X	–	–	–	–	X	X	–	–	X	–	–	X
Fans	X	X	X	X	X	X	X	X	X	–	–	–	–	–	–	–	–	–	–	–	–	–	–	–	–	–	–	–	–	X	–	–	X
Palletizers	–	X	X	–	X	X	–	–	–	–	X	X	–	–	–	–	X	X	–	–	–	–	X	X	–	–	–	–	–	X	–	–	X
Compressors	–	X	X	–	X	X	–	–	–	–	–	–	–	–	–	–	–	–	–	–	–	–	–	–	–	–	–	–	–	X	–	–	X
Roller Mill	–	X	X	–	X	X	–	–	–	–	–	–	–	–	–	–	–	–	–	X	X	–	–	–	–	X	X	–	–	X	–	–	X
Die Charger	–	X	X				–	–	–	–	–	–	–	–	–	–	X	X	–	–	–	–	–	–	–	–	–	–	–	X	–	–	X
Rotary Table	–	X	X				–	–	–	–	–	–	–	–	–	–	X	X	–	–	–	–	X	X	–	–	–	–	–	X	–	–	X

(1) Table Legend: 3= SMC-3 controller; F = SMC Flex controller; 50 = SMC-50 controller

Table 129 - OEM Specialty Machine[1]

Application	Soft Start			Current Limit			Kickstart			Soft Stop			Pump Control			Accu- Stop			Smart Motor Brake			Preset Slow Speed			Slow Speed with Brake			Linear Speed Acceleration			Torque Control Start		
	3	F	50	3	F	50	3	F	50	3	F	50	3	F	50	3	F	50	3	F	50	3	F	50	3	F	50	3	F	50	3	F	50
Centrifugal Pumps	X	X	X	X	X	X	–	–	–	–	–	–	–	X	X	–	–	–	–	–	–	–	–	–	–	–	–	–	–	X	–	–	X
Washers	–	X	X	–	X	X	–	–	–	–	–	–	–	–	–	–	X	X	–	X	X	–	X	X	–	X	X	–	–	X	–	–	X
Conveyors	X	X	X	X	X	X	X	X	X	X	X	X	–	–	–	–	X	X	–	X	X	–	X	X	–	X	X	–	–	X	–	–	X
Power Walks	–	X	X	–	X	X	–	–	–	–	X	X	–	–	–	–	–	–	–	–	–	–	–	–	–	–	–	–	–	X	–	–	X
Fans	X	X	X	X	X	X	X	X	X	–	–	–	–	–	–	–	–	–	–	–	–	–	–	–	–	–	–	–	–	X	–	–	X
Twisting/ Spinning Machine	–	X	X	–	X	X	–	–	–	–	–	–	–	–	–	–	–	–	–	–	–	–	–	–	–	–	–	–	–	X	–	–	X

(1) Table Legend: 3= SMC-3 controller; F = SMC Flex controller; 50 = SMC-50 controller

Table 130 - Lumber and Wood Products[1]

Application	Soft Start			Current Limit			Kickstart			Soft Stop			Pump Control			Accu- Stop			Smart Motor Brake			Preset Slow Speed			Slow Speed with Brake			Linear Speed Acceleration			Torque Control Start		
	3	F	50	3	F	50	3	F	50	3	F	50	3	F	50	3	F	50	3	F	50	3	F	50	3	F	50	3	F	50	3	F	50
Chipper	–	X	X	–	X	X	–	–	–	–	–	–	–	–	–	–	–	–	–	X	X	–	–	–	–	X	X	–	–	X	–	–	X
Circular Saw	–	X	X	–	X	X	–	–	–	–	–	–	–	–	–	–	–	–	–	X	X	–	–	–	–	X	X	–	–	X	–	–	X
Bandsaw	–	X	X	–	X	X	–	–	–	–	–	–	–	–	–	–	–	–	–	X	X	–	X	X	–	X	X	–	–	X	–	–	X
Edger	–	X	X	–	X	X	–	–	–	–	–	–	–	–	–	–	–	–	–	–	–	–	–	–	–	–	–	–	–	X	–	–	X
Conveyors	X	X	X	X	X	X	X	X	X	X	X	X	–	–	–	–	X	X	–	–	–	–	X	X	–	–	–	–	–	X	–	–	X
Centrifugal Pumps	–	X	X	–	X	X	–	–	–	–	–	–	–	X	X	–	–	–	–	–	–	–	–	–	–	–	–	–	–	X	–	–	X
Compressors	–	X	X	–	X	X	–	–	–	–	–	–	–	–	–	–	–	–	–	–	–	–	–	–	–	–	–	–	–	X	–	–	X
Fans	X	X	X	X	X	X	X	X	X	–	–	–	–	–	–	–	–	–	–	–	–	–	–	–	–	–	–	–	–	X	–	–	X
Planers	–	X	X	–	X	X	–	–	–	–	–	–	–	–	–	–	–	–	–	–	–	–	–	–	–	–	–	–	–	X	–	–	X
Sander	–	X	X	–	X	X	–	–	–	–	–	–	–	–	–	–	X	X	–	X	X	–	X	X	–	X	X	–	–	X	–	–	X
Debarker	–	X	X	–	X	X	–	–	–	–	–	–	–	–	–	–	–	–	–	X	X	–	–	–	–	X	X	–	–	X	–	–	X

(1) Table Legend: 3= SMC-3 controller; F = SMC Flex controller; 50 = SMC-50 controller

Table 131 - Water/Wastewater Treatment and Municipalities[1]

Application	Soft Start			Current Limit			Kickstart			Soft Stop			Pump Control			Accu- Stop			Smart Motor Brake			Preset Slow Speed			Slow Speed with Brake			Linear Speed Acceleration			Torque Control Start		
	3	F	50	3	F	50	3	F	50	3	F	50	3	F	50	3	F	50	3	F	50	3	F	50	3	F	50	3	F	50	3	F	50
Centrifugal Pumps	X	X	X	X	X	X	–	–	–	X	X	X	–	X	X	–	–	–	–	–	–	–	–	–	–	–	–	–	–	X	–	–	X
Centrifuge, heavy	–	X	X	–	X	X	–	–	–	–	–	–	–	–	–	–	–	–	–	X	X	–	–	–	–	X	X	–	–	X	–	–	X
Fans	X	X	X	X	X	X	–	–	–	X	X	X	–	–	–	–	–	–	–	–	–	–	–	–	–	–	–	–	–	X	–	–	X
Compressors	X	X	X	X	X	X	–	–	–	–	–	–	–	–	–	–	–	–	–	–	–	–	–	–	–	–	–	–	–	X	–	–	X

(1) Table Legend: 3= SMC-3 controller; F = SMC Flex controller; 50 = SMC-50 controller

Fans

Soft starters are commonly used to start fans. Fans are typically variable torque type loads. The amount of torque that is required increases with the starting speed of the fan.

The best way to start a fan load is with the dampers closed to reduce the amount of resistance to airflow. Figure 39 and Figure 40 illustrate methods the SMC-50 uses for successful fan starting. Note the smooth start of the sensorless linear acceleration, keeping smooth control of the motor current.

Figure 39 - Sensorless Linear Acceleration and Sensorless Linear Deceleration

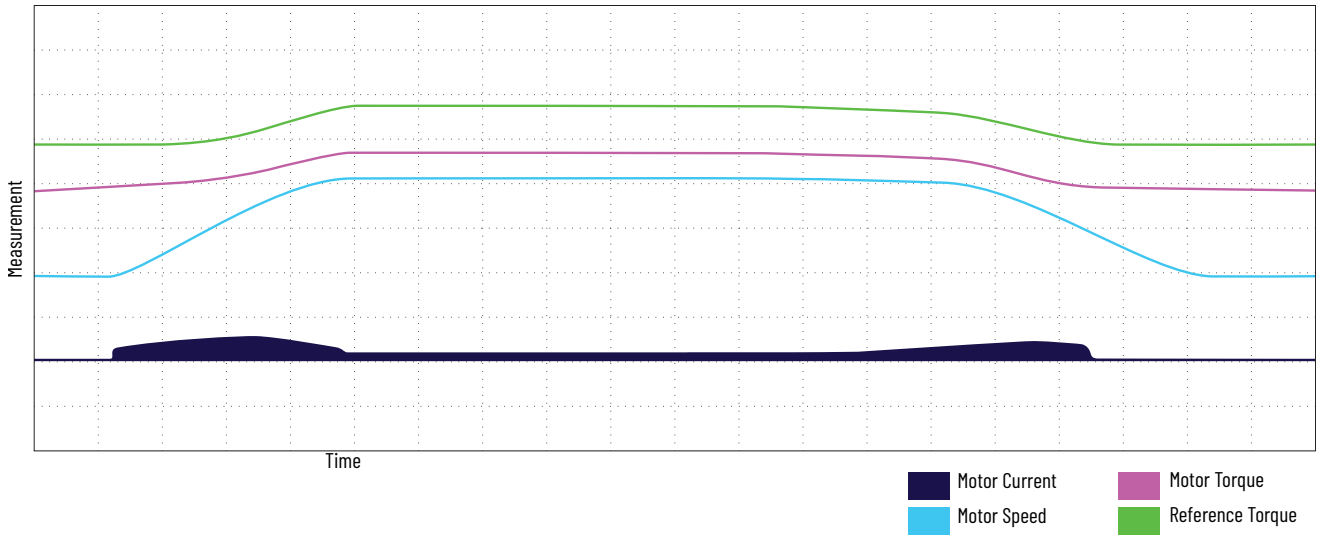

Figure 40 - Soft Start and Soft Stop

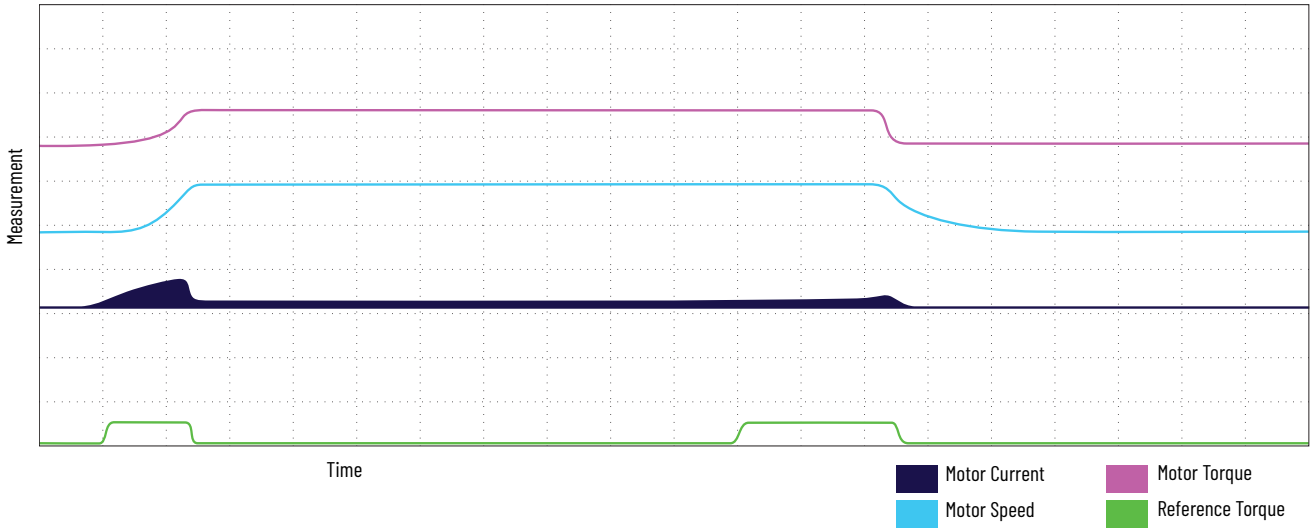

Exhaust Fan with Soft Start

Problem

The belts on an exhaust fan frequently break, which causes maintenance problems. In addition to the high cost of the belts, the fan belt guard is cumbersome to remove. The high starting torque from the motor is a major contributor to the belt wear. The customer wants to remotely stop and start the fan from a PLC. Panel space is limited, which requires a compact device. Figure 41 illustrates this scenario.

Figure 41 - Exhaust Fan with Soft Start

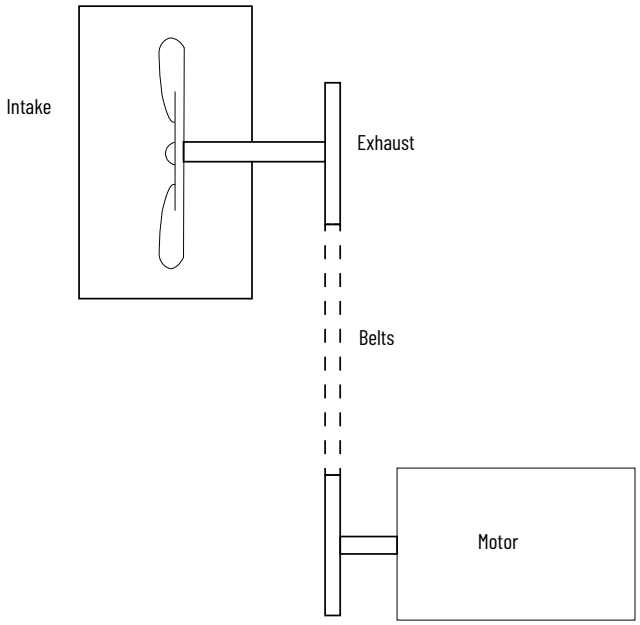

Solution

The SMC-50 controller is installed as a retrofit to the existing starter. The ramp time is set for 28 seconds, which facilitates a smooth acceleration while reducing the starting torque of the motor and minimizing the mechanical shock to the belts. The SMC-50 controller has optional communication capabilities, allowing it to be controlled remotely via a PLC. It also has built-in overload protection, which saves panel space by not requiring a separate overload protection device.

SMC Flex controllers also have the flexibility of setting the ramp time and the adjustability required for this application.

SMC-3 controllers have fixed selectable ramp times and selectable starting torques.

Chiller with Soft Start

Problem

A belt-driven fan on a chiller frequently breaks the belt because of high starting torque. The customer incurs excessive downtime because the housing has to be removed to replace the belt. A combination across-the-line starter is used to control the motor. Control panel space is limited. A device that uses same control and line voltage is required because there is no room in the panel for a control circuit transformer. Figure 42 illustrates this scenario.

Figure 42 - Chiller with Soft Start

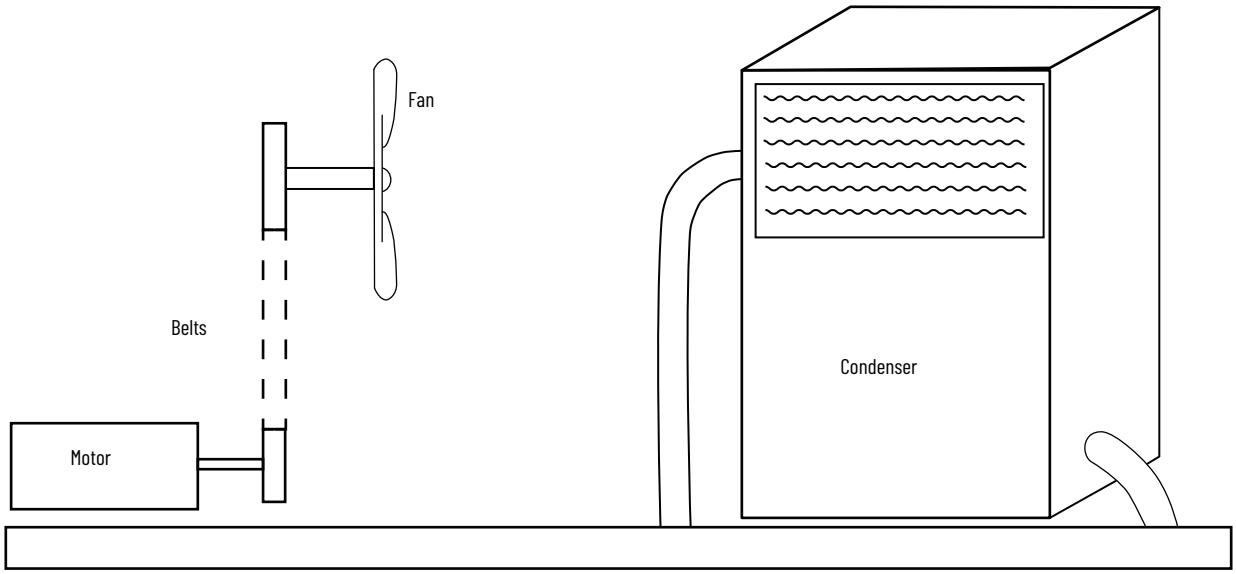

Solution

The SMC-50 controller is installed as a retrofit to the chiller. It is set for an 18-second soft start to reduce the snap to the belts as a result of the high starting torque. It also reduces belt "squealing" that had been occurring at startup. Because the SMC-50 controller can operate with 240V control voltage and line voltage, a control circuit transformer is not required. The built-in overload protection on the SMC-50 controller further reduces the required panel space. The customer is able to retrofit the controller into the existing panel space.

Both the SMC Flex and the SMC-3 controllers can operate at 240 control and line voltage, removing the requirement for a control circuit transformer.

Cooling Tower Fan with Linear Acceleration

Problem

A chain-driven fan that moderates the temperature of water in a chemical process is started across-the-line. The system requires frequent inspection and maintenance because of problems with the chain drive. Ice forms on the blades in winter. The air density is affected by seasonal temperature variations, which affects the starting time. The application requires a controlled start. Figure 43 illustrates this scenario.

Figure 43 - Cooling Tower Fan with Linear Acceleration

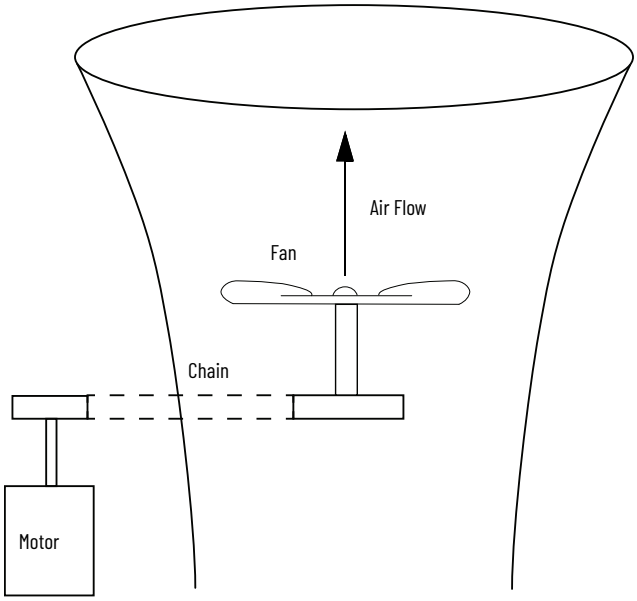

Solution

The SMC-50 controller is installed to provide a controlled acceleration to minimize the mechanical shock that is encountered during an across-the-line start. Maintenance inspection is also reduced. In the winter, when a longer start is required, linear acceleration is used to start the motor in the same time frame.

The SMC Flex controller offers soft start mode and linear acceleration with the use of an external tachometer.

The SMC-3 controller only offers soft start or current limit mode for this application.

Pumps

System dynamics play a big part in pumping applications. The motor, valving, elbows, head (static and dynamic) pressure and power source of the system are all factors. Each system requires different ways to start and stop the pump to reduce water hammer. The two main pumping systems are positive displacement and centrifugal.

SMC controllers work best when they start lightly loaded centrifugal pumps. These pumps increase pressure from the impellers, which creates the pumping action. Motor torque increases during the starting process.

In contrast, positive displacement pumps have a constant torque characteristic and need more-specific calculations to correctly estimate requirements. One tool to use is the SMC controller estimation wizard. The issue is the potential for high torque demand while starting this type of pump. The SMC controller requires full voltage at start to provide full torque.

Because each system is different, the SMC-50 controller offers multiple ways to control the pump, simply by changing parameters.

You can use soft start, pump start, and linear acceleration starting methods. Stopping methods for pump applications include soft stop, pump stop, and linear deceleration.

Figure 44 through Figure 46 compare starting methods using a 10-second start time, 0% initial torque, and 65% load on a centrifugal pump.

Figure 44 - Soft Start and Soft Stop in Pump Application

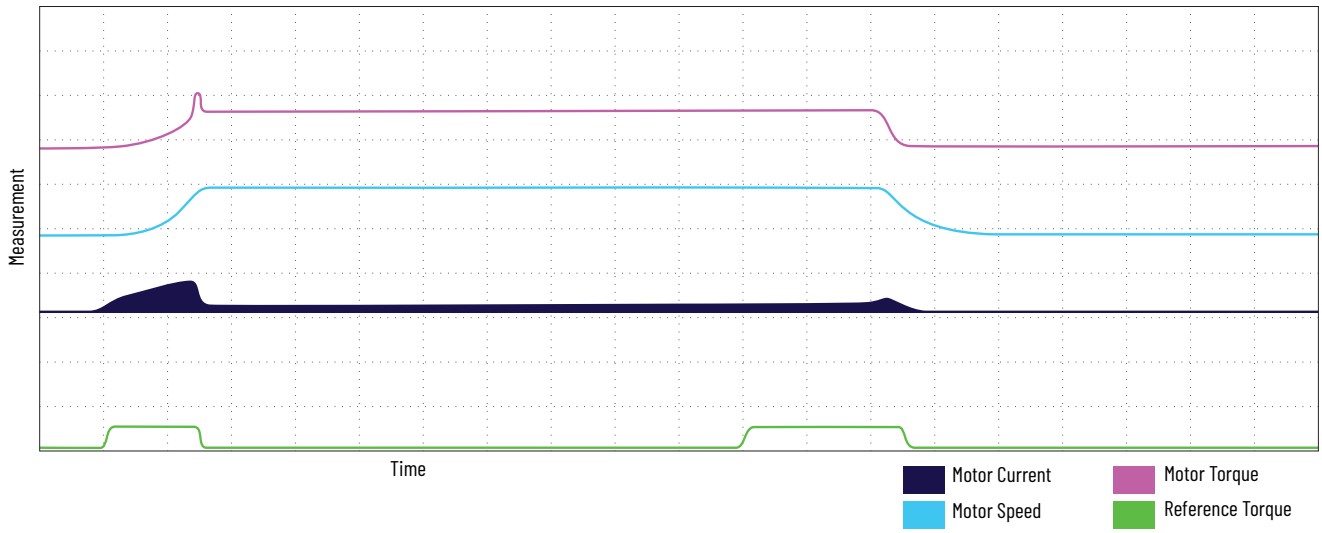

Figure 45 - Pump Control in Pump Application

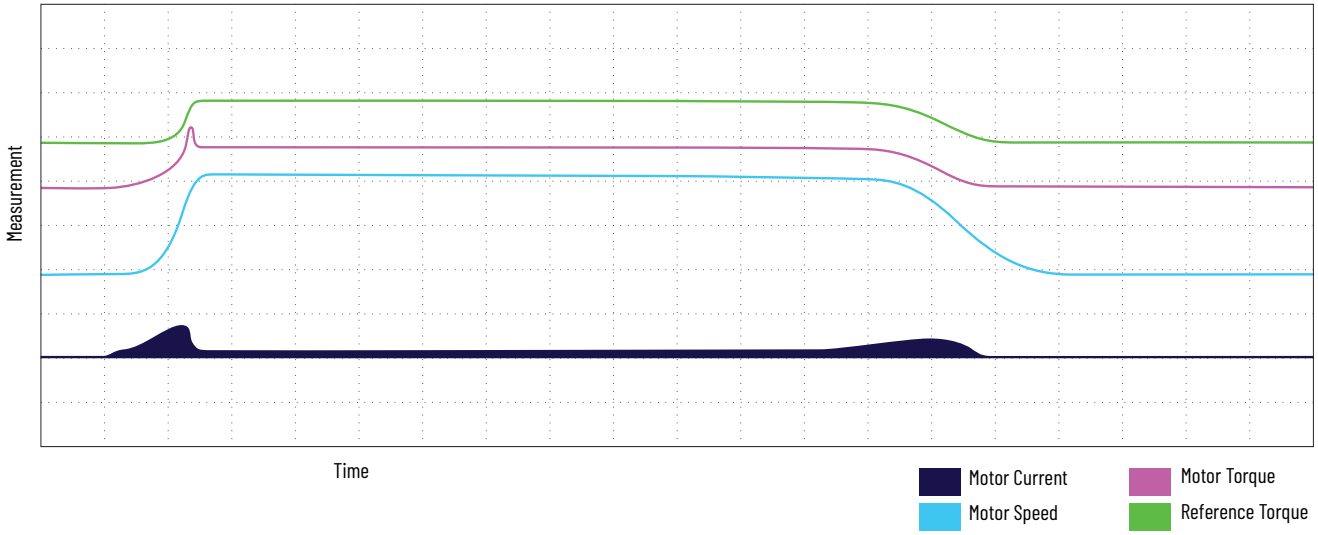

Figure 46 - Linear Acceleration and Linear Deceleration in Pump Application

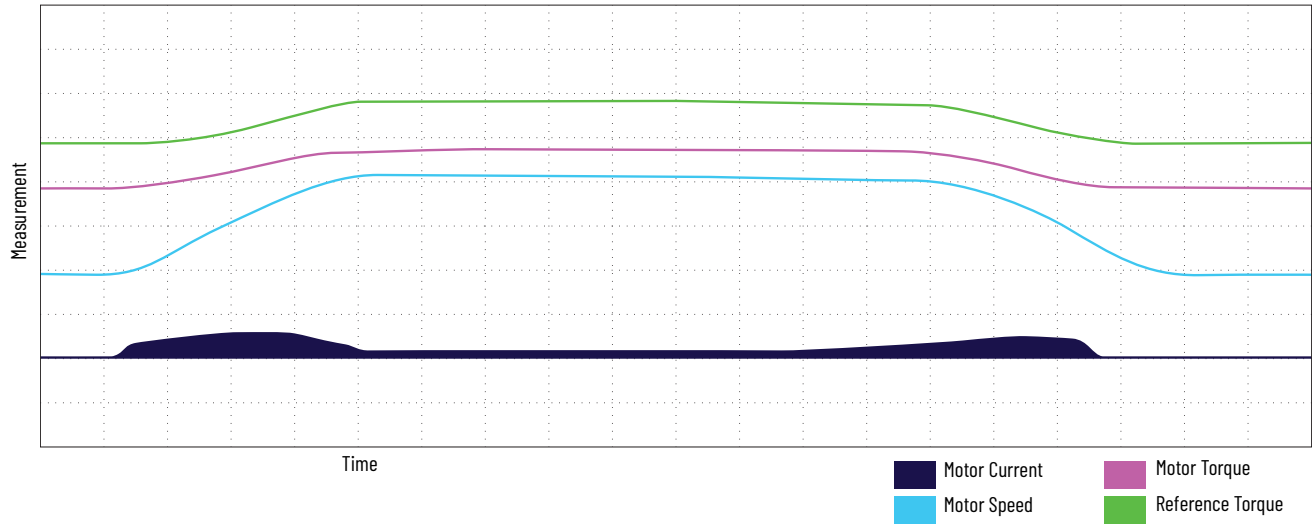

Notice the lower current consumption that is used by using the linear acceleration mode on startup. This mode is not as load dependent as the other two methods. In addition to the starting and stopping methods offered by the SMC-50 controller, it also offers the ability to monitor and control pumping applications that are not available in other soft starters

Pump with Soft Start

Problem

A municipal water company is experiencing problems with damaged pump impellers. The damage occurs during frequent motor starting while the load below the check valve drains from the system. A timing relay is installed to help prevent restart under load, but it needs to be adjusted frequently. The pumping station motor is over 100 feet below ground, which makes repair costly. For maintenance scheduling purposes, an elapsed time meter that measures motor running time needs to be installed in the enclosure. Figure 47 illustrates this scenario.

Figure 47 - Pump with Soft Start

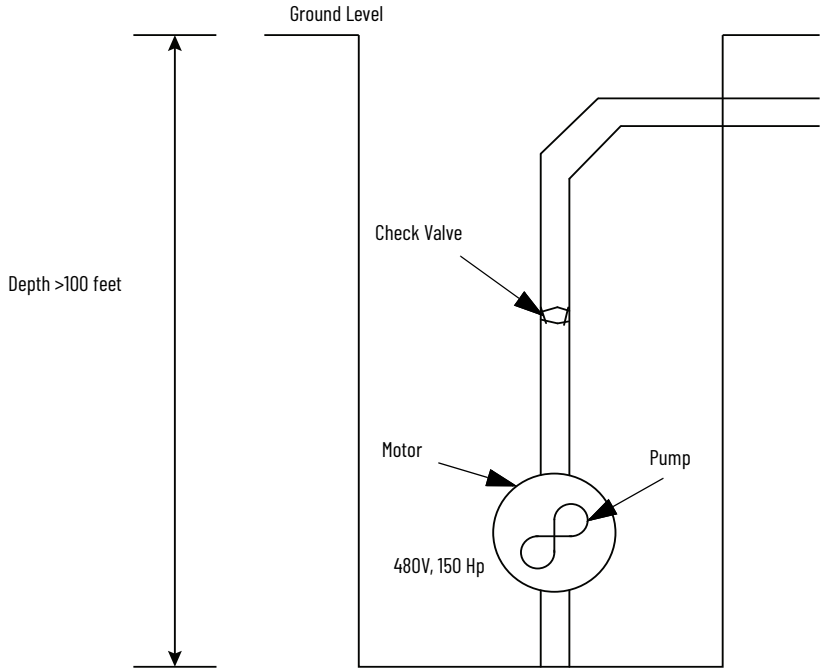

Solution

The SMC-50 controller is installed, and it provides a controlled motor acceleration. It can reduce the shock to the impeller by decreasing the torque during startup. The SMC-50 controller backspin timer feature can be implemented to help prevent the motor from starting while it turns in a reverse direction. By using the built-in elapsed time meter, panel space is saved. The SMC-50 controller line diagnostics protect the motor by detecting faults such as a shorted SCR condition at pre-start and shuts off the motor, protecting it against damage. Soft start is a good method to use with soft power sources to reduce current spikes.

The SMC Flex controller can also perform control with the backspin timer feature only with the pump control module.

The SMC-3 controller offers soft start control but not a backspin timer.

Pump with Pump Control

Problem

A municipal pump uses a soft start controller with soft stop to control the pump motor. The soft stop controls the motor in an open-loop fashion by reducing the voltage to the motor. Because there is not enough motor torque to drive the load, the motor quickly reaches its stall point. Severe surges cause pipe vibration and breakage during the stop mode. Figure 48 illustrates this scenario.

Figure 48 - Pump with Pump Control

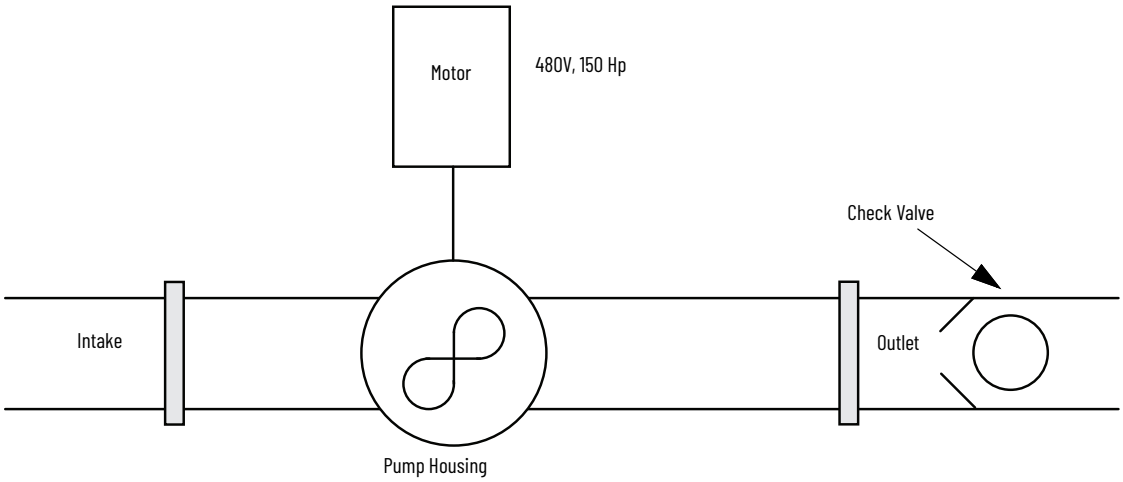

Solution

The SMC-50 controller is installed and configured to the Pump Control setting. The Pump Control option removes the surges by controlling the speed of the motor during starting and stopping. The microprocessor inside the SMC-50 controller analyzes the motor variables and generates control commands to reduce the surges in the system.

You could also use the pump control option on the on the SMC Flex controller.

The SMC-3 controller does not offer pure pump control option.

Pump Control with Sensorless Linear Acceleration and Deceleration

Problem

A municipality has a pumping station where there is water hammer taking place even when using pump stop. The water hammer causes vibration alarms to go off at a bank several miles away. Fire and police are automatically notified and called to the bank. Once the source of the issue is identified, the municipality needs to adjust the stopping procedure. The pump stop profile of the SMC Flex controller is verified with an oscilloscope, but does not solve the issue. Figure 49 illustrates this scenario.

Figure 49 - Pump Control with Sensorless Linear Acceleration and Deceleration

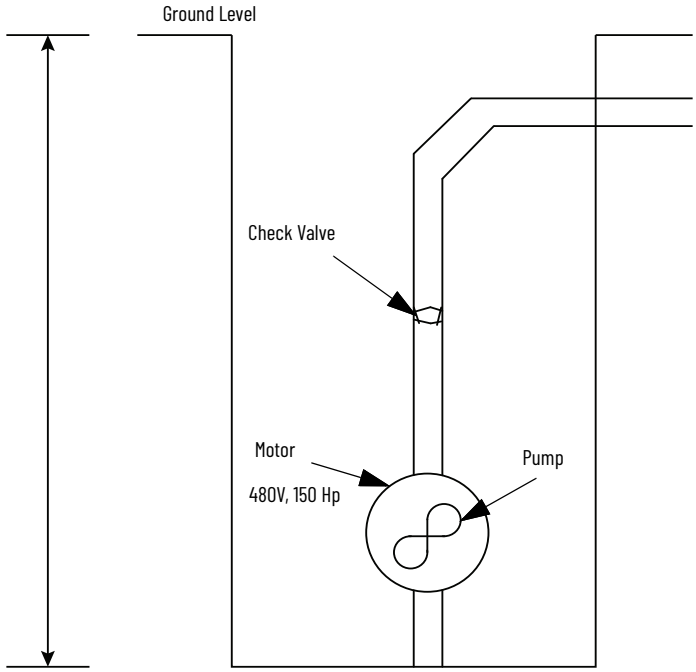

Solution

Linear deceleration using the patented sensorless linear deceleration is the answer. The SMC-50 controller is connected to the SMC Flex power structure using the proper upgrade kit for the 108...251 A units. This method controls the SMC-50, but removes the need to remove the entire SMC Flex controller. This lets the personnel leave the 3-phase power wiring connected. (Three-phase power is turned off when the controllers are swapped.) Once the addition of the SMC-50 control module is complete, using the linear deceleration instead of pump stop removes the water hammer and provides a smooth closing of the valves.

You cannot place the SMC-3 controller on an SMC Flex power structure, and the SMC-3 controller does not have linear acceleration or deceleration capabilities.

Pump Cavitation and Blockage

Problem

A customer is unable to detect pump cavitation quickly enough to help prevent damage to the system, including the pump impellers and valves. The traditional way to detect pump cavitation is to use a current-monitoring device to detect an issue. These devices are added separately from the starter. However, even at no load, there is still magnetizing current. Figure 50 illustrates this scenario.

Figure 50 - Pump Cavitation and Blockage (for 150 Hp Motor)

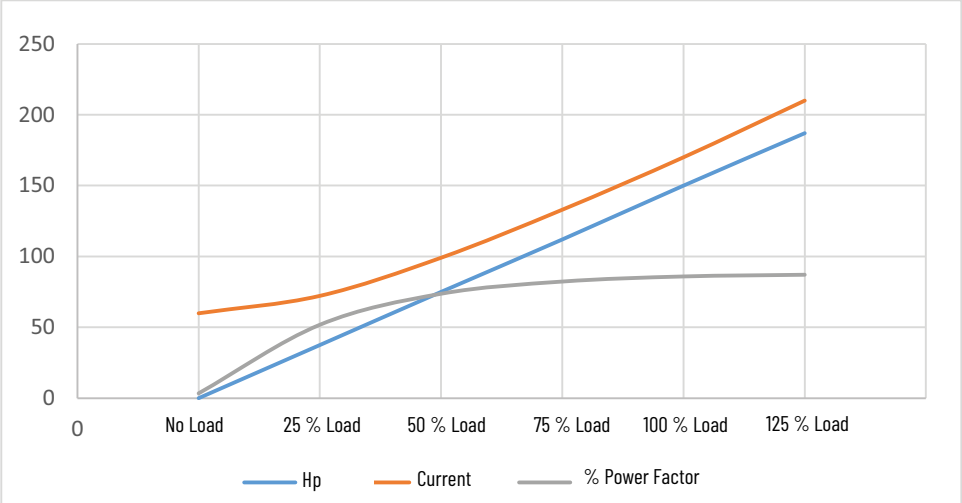

Solution

In addition to starting and stopping the motor for the pumping application, the SMC-50 controller can also monitor and trigger alarms or faults based on current, real power, and power factor. At no load, power factor is at a near zero value, real power is at zero value, and motor current is at another value due to the magnetizing current of the motor. The combination of the three values can help determine whether pump cavitation is taking place. For example, if real power decreases, this could indicate a clogged suction line, which can result in the pump running dry. It could also be an indication of pump cavitation. If real power increases, this can indicate overload or a rupture in the discharge line. You can set real power fault and alarm functions with a time delay and select for both under and over values.

The SMC Flex controller can monitor real power and power factor, but it does not have the ability to enunciate an alarm or fault based only on those values.

The SMC-3 controller does not have real power enunciation capability.

Conveyors

Conveyors are one of the easiest systems to control using the SMC-50 controller. The SMC-50 controller offers linear acceleration and soft start for controlling a smooth start and stop of conveyors. The primary use of the soft starter in this application is to reduce mechanical stress and dynamic shifts in product.

Soft start is the typical way of starting a conveyor that is lightly loaded. If you need to restart the conveyor with a heavier load, linear acceleration may be a more effective option. Linear acceleration is not as load-dependent as soft start is, so it is more flexible under varying load conditions. It is also more flexible than soft starting when it must function in varying thermal conditions, such as running a cold motor in the morning, and a hotter motor as the day progresses.

Figure 51 and Figure 52 illustrate plots of starting and stopping constant loads, such as conveyors.

Figure 51 - Soft Start and Soft Stop on Conveyor

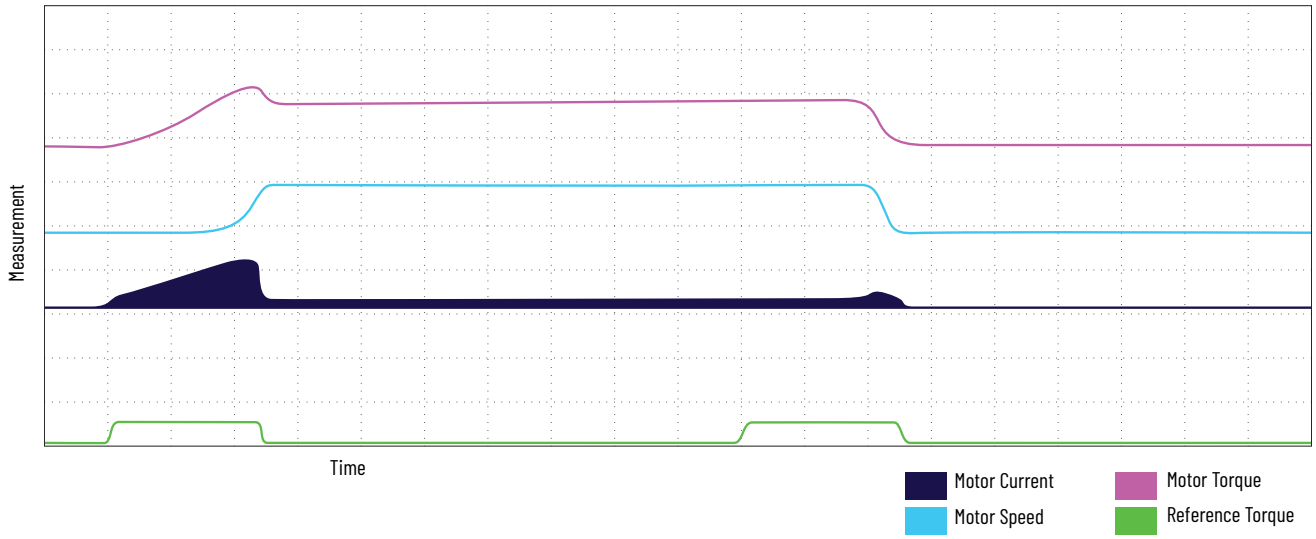

Figure 52 - Linear Acceleration and Linear Deceleration on Conveyor

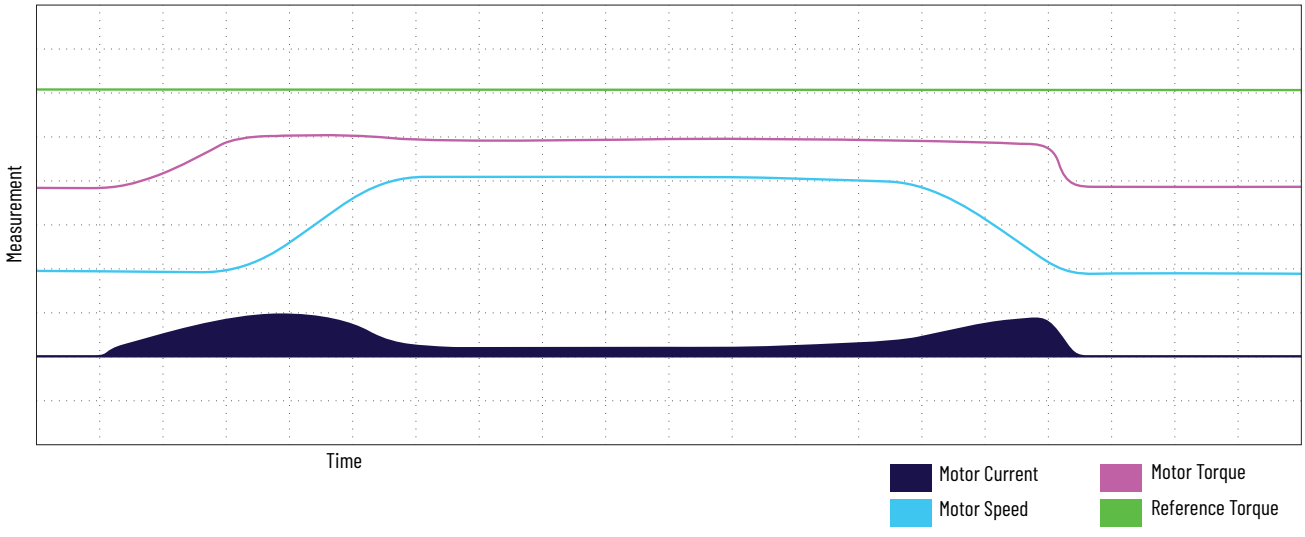

These two scenarios use identical motors and starting parameters. Note the difference between the two starts. The sensorless linear acceleration provides smoother motor torque over the soft starting method. Unlike soft start, which is load dependent, linear acceleration can produce a more accurate starting time. Sensorless linear acceleration also produces a smoother motor current, torque, and speed.

Towline Conveyor with Soft Start and Soft Stop Options

Problem

A towline conveyor at the end of a production line has frequent damage to the gearbox caused by the starting torque from across-the-line motor starting. There are also frequent spills during starting and stopping. The conveyor occasionally needs to be started under heavy load. This towline application has a variety of starting requirements that other soft starters could not satisfy. Investing in a variable speed drive was not cost effective. Figure 53 illustrates this scenario.

Figure 53 - Towline Conveyor with Soft Start and Stop

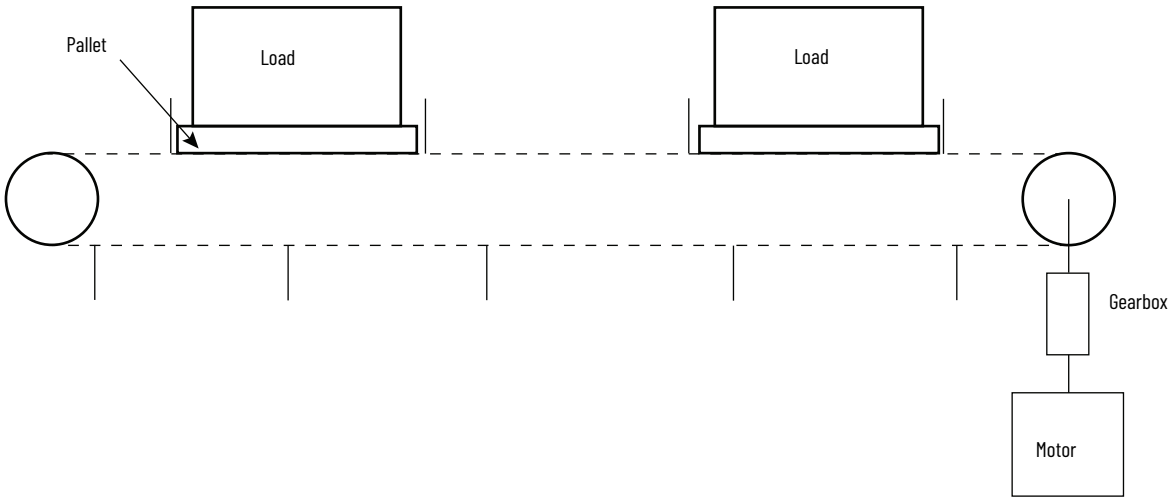

Solution

The SMC-50 controller with the Soft Stop option is installed as a retrofit to the existing across the-line starter. The starting and stopping times are programmed for 13 seconds. The reduced starting torque decreases the shock to the gearbox and keeps the load from shifting on startup. The Soft Stop option protects against loads shifting while stopping. The kickstart feature is used to provide a pulse of current to break the load away when higher starting torque is required. The SMC-50 controller meets the starting requirements and is a cost-effective solution.

SMC Flex controllers also have a full range of adjusting the initial torque value for starting the soft starting application, including full voltage if needed.

SMC-3 controllers have limited adjustability on initial torque value. They offer soft stop and kickstart options.

Palletizer with Sensorless Linear Acceleration

Problem

A palletizer moves boxes of product through a packaging process to a shrink wrap machine. Across-the-line starting causes unwanted product spillage, and an interruption of production due to the uncontrolled torque from the motor on startup. Because several types of product, in different size boxes, are produced on the same line, the system needs the ability to match the acceleration ramp to the product. Figure 54 illustrates this scenario.

Figure 54 - Palletizer with Sensorless Linear Acceleration

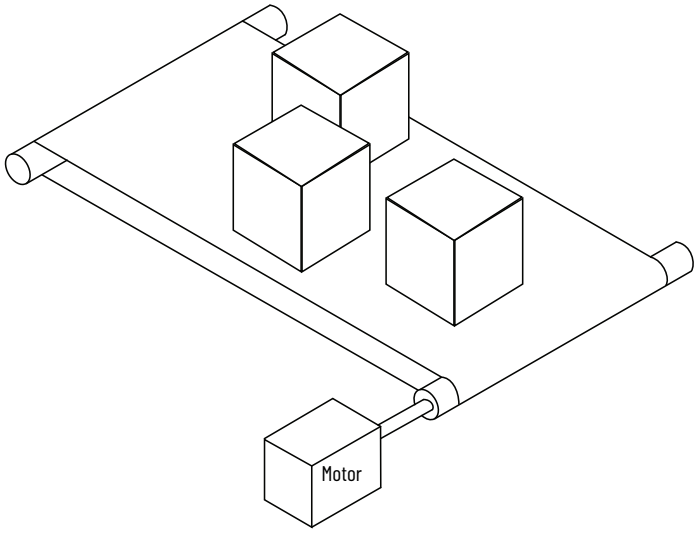

Solution

The SMC-50 controller was installed. It is now able to furnish a controlled acceleration, reduce the shock to the load, and eliminate product spillage. The Linear Acceleration feature allows the controller to be programmed to more closely match the motor acceleration with the product produced.

You could also use an SMC Flex controller in soft start mode. With an external tachometer attached, you could also use linear acceleration.

In this application, you could use the SMC-3 controller in soft start mode.

Bottle Filler with Soft Start and Soft Stop

Problem

A bottle filler line has product spillage during starting and stopping. An across-the-line starter is used to start the motor. The application also requires an auxiliary contact that energizes when the motor is up to speed. Figure 55 illustrates this scenario.

Figure 55 - Bottle Filler with Soft Start and Soft Stop

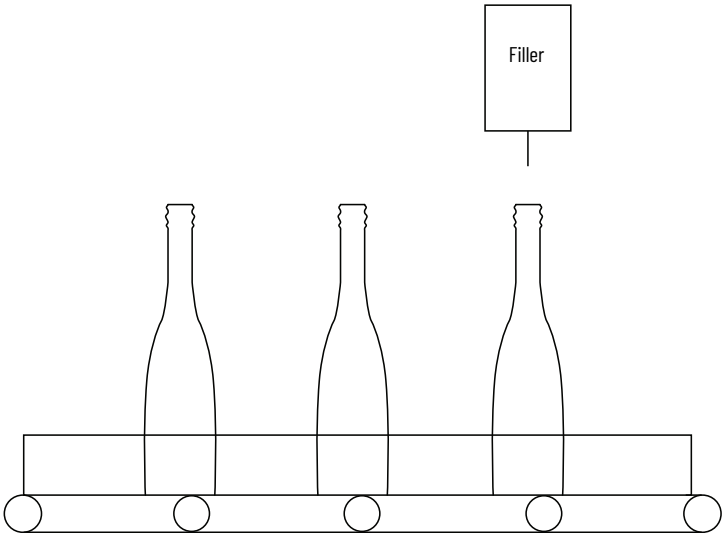

Solution

The SMC-50 controller is installed and programmed for a 13-second soft start with an 18-second soft stop. The controlled start reduces the starting torque and the product spillage. The soft stop option extends the stopping time and smooths load shift while stopping. The auxiliary contacts are configured to change state when the motor is up to speed.

You could also use either the SMC Flex or SMC-3 controllers for this application.

Centrifuge

Centrifuge with Current Limit Start and SMB Smart Motor Braking

Problem

A centrifuge requires a reduced voltage start because of power company restrictions. The high torque during starting damages the gearbox. The customer wants a shorter stop time than the present 15-minute coast-to-rest. The long stop time causes delays in the production process. A Wye-Delta starter with a mechanical brake is currently in use. A zero-speed switch is used to release the brake. The mechanical brake requires frequent maintenance and replacement, which is costly and time consuming. Both the mechanical brake and zero speed switches are worn out and require replacement. Figure 56 illustrates this scenario.

Figure 56 - Centrifuge with Current Limit Start and SMB Smart Motor Braking

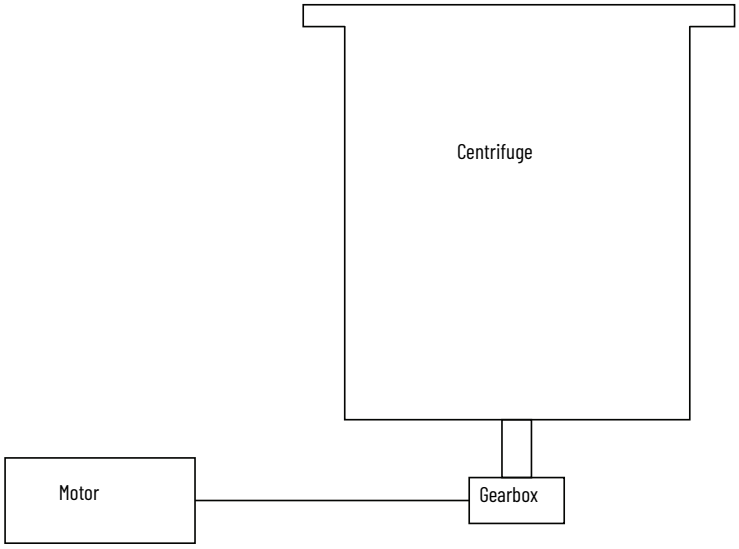

Solution

The SMC-50 controller using the SMB option is installed. The controller is set for a 28-second, 340% current limit start, which meets the power company requirements and reduces the starting torque stress to the gearbox. The SMB option allows the centrifuge to stop in approximately one minute. The SMC-50 controller with SMB option does not require additional mounting space or panel wiring. The controller is mounted in a panel that is much smaller than the previous controller. Additionally, the new controller does not require frequent maintenance and can sense zero speed without a feedback device.

You can also use the SMC Flex controller with SMB in this application.

You should not use an SMC-3 controller in this instance because it does not have the braking option.

Centrifuge with Current Limit Start

Problem

High starting torque damages the gearbox to a centrifuge. A reduced-voltage starter is desired because this motor is near the end of the distribution line. In addition, the incoming power is unbalanced. The application needs a controller with a circuit breaker combination enclosure. When the enclosure door is open, the controller's circuit boards can not be exposed. Figure 57 illustrates this scenario.

Figure 57 - Centrifuge with Current Limit Start

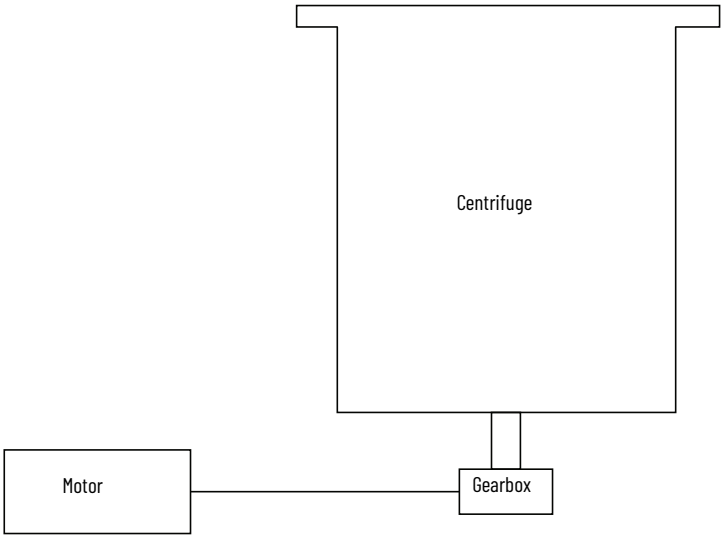

Solution

The SMC-50 controller is installed. It is programmed for a 27-second, 300% current limit start, which limits the starting torque of the motor and the shock to the gearbox on startup. The Energy Saver feature reduces the voltage to the motor when it runs under a light load. The SMC-50 controller is ordered as a combination controller with a circuit breaker. The SMC-50 controller has no exposed circuit boards, which fulfills the packaging requirements.

The SMC Flex controller could also be used, but it does not offer energy saver mode.

The SMC-3 controller could be used, but it is not recommended because starting methods may need to take longer and this controller has limited adjustability.

Shock Loads

A load that quickly accelerates or decelerates is called a shock load. Shock loads are typically associated with a lot of vibration, dust, and current spikes because product (such as rock) gets stuck in the hopper. The SMC-50 controller electrically monitors what happens when running; there are current spikes from the application during acceleration and deceleration.

The SMC-50 controller is available in two versions, one version with solid-state control, and the other with an integrated bypass. You will need to apply these versions differently in some applications, including shock load.

For Controllers with Integrated Bypass Power Structures

The SCRs and the integrated bypass are not fully rated and need more awareness in this type of application. The internal bypass contactor is used after the SCRs of the soft starter have brought the motor up to speed. The algorithm of the soft starter determines when the motor is up to speed and then transitions from SCR control to the bypass contactor. The SMC-3 and the SMC Flex controllers are both hybrid soft starters; they have the power structure of a solid-state starter and an internal bypass contactor. The SMC-50 controller is available with an internal bypass contactor or as a purely solid-state version with no internal bypass contactor.

Attributes of an internal bypass contactor allow the soft starter to operate at a lower temperature with the motor at speed than a fully solid-state starter. A hybrid soft starter is typically smaller than that of fully rated SCRs with no bypass. This is because smaller components are used to start and carry the load current. The SCRs are rated for intermittent duty (AC-53b). The internal bypass contactors are not fully rated (AC-3), because they are not designed to make or break load current.

With an internal bypass soft starter, you only need power and control wiring. You do not need to purchase any additional devices. Internal bypass on a soft starter is appropriate for conveyors, fans, pumps and other applications in which the current and speed do not change while at running speed.

In a rock crushing application, there is a high chance of jamming material in a hopper, causing spikes in current. A soft starter with an internal bypass contactor monitors current and typically drops out of bypass around 120% over the SMC frame rating to protect the contactor and return to SCR control. Once the current returns to normal, the bypass contactor is pulled back in. This cycling on and off could shorten the life of the internal electromechanical contactor.

Not having all protective features of the soft starter during the run mode may be a benefit to keep an application like rock crushing working. In that application, using an external bypass contactor that is fully rated to handle the current surges keeps the contactor pulled in until a stop command is given or an overload is tripped. External overloads may be needed to protect the motor because some soft starters may not be able to read motor data while in external bypass mode.

An external bypass contactor can also be used on a AC-53a-rated fully solid-state SMC-50 controller. Depending on both the soft starter and the mounting and wiring of the bypass contactor, you might not need external overload devices. The mounting features from the soft start to the bypass contactor dictate whether the soft starter will be able to read data (current and voltage readings) while in bypass mode.

In UL/CSA regulated regions, size the bypass contactor according to the motor Hp and FLA. In IEC regulated regions, size the bypass conductor according to the AC-1 rated bypass contactor rating.

The Hp ratings of the AC-3 rated bypass contactor must match the Hp ratings of the SMC soft starter. The short-circuit ratings of the bypass contactor must be similar to those of the SMC soft starter. This is particularly important for the AC-1 rated bypass contactor selection.

For Controllers with Fully Solid-state Power Structures

The SMC-50 fully solid-state version of the controller lets you keep the machine running when current spikes. The SCRs are fully rated to handle the shock of the current spikes. Fully rated means they have the AC-53a rating, indicating the ability to operate at full duty. Overload and other protection of the motor and the SMC controller still applies.

Fully solid-state devices are advantageous in harsh applications when there is a lot of vibration, dust, and dirt. Conformal coated circuit boards on the SMC-50 controller help protect component damage from conductive or corrosive dust in those types of environments. Vibration is not a concern as it would be for an electromechanical bypass contactor, where it could potentially cause contact bounce.

Rock Crusher with Current Limit and External Bypass Kit

Problem

Because of the remote location of a rock quarry, the utility power is weak and requires the use of current limit to start the crusher. The 350 Hp motor that drives the crusher has used hybrid soft starters in the past, but had to replace power structures too often because of the current spikes when product is stuck in the hopper. Figure 58 illustrates this scenario.

Figure 58 - Rock Crusher with Current Limit and External Bypass Kit

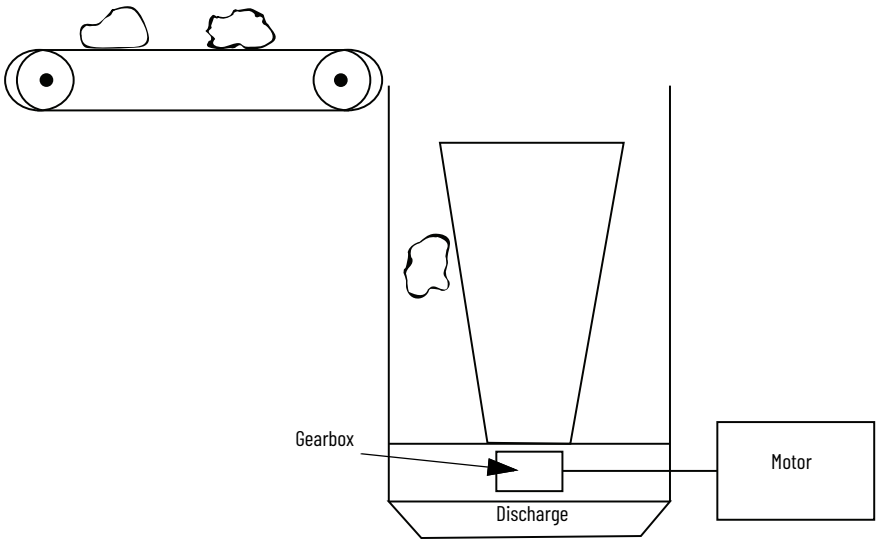

Solution

The solid-state SMC-50 controller is installed with an external bypass by using the bypass kit. The bypass kit allows the SMC-50 controller to still provide protection to the motor, including current overload, without the need for external protection to the externally connected bypass. When rock spikes the current, the system still runs because the fully AC-3 rated contactor does not drop out unless there is an overload condition that is based on the thermal curve and trip class that is set. The conformal coating of the SMC-50 controller circuit board keeps any dust from interfering with the operation of the soft starter. If the SMC-50 solid-state unit is used, the unit will continue to run until the thermal overload, or other parameter is exceeded. The SMC-50 controller can operate in solid-state mode without an optional external bypass by changing one parameter.

The SMC Flex controller can also perform current limit with the external bypass by setting the bypass parameter to external.

The SMC-3 controller can not run an external bypass.

High-inertia Loads

Loads that take longer than 30 seconds to start are typically considered to be high-inertia loads. In these applications, the inertia of the load is typically a significant factor in how long the motor will take to start without damaging the equipment. Heat generation is a byproduct of these long starting times. Too much heat can damage the motor, wiring, and other system components.

It is important to estimate how long it will take to start the motor for a given process that takes over 30 seconds to start. The SMC estimation tool can assist with this. See page 160.

Hammer Mill with Current Limit Start

Problem

A hammer mill with a high inertia load requires a reduced-voltage start because of power company restrictions. High torque on startup causes belt wear. Panel space is very limited. Traditional reduced voltage starters do not fit in the available space. Figure 59 illustrates this scenario.

Figure 59 - Hammer Mill with Current Limit Start

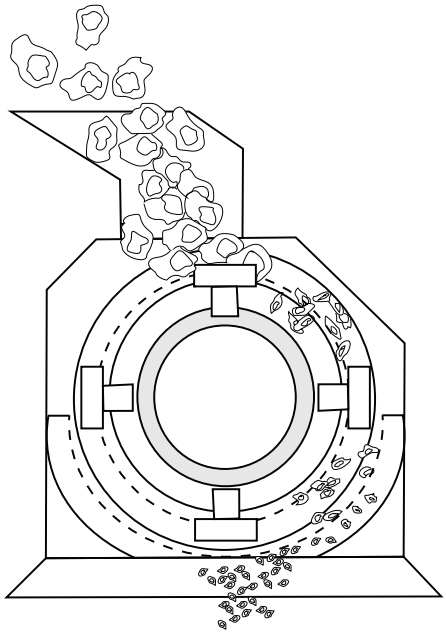

Solution

The SMC-50 controller is installed. It is set for a 23-second, 425% current limit start, which meets the power company's requirement for a reduced-voltage start. A current limit start is selected to quickly break away the high-inertia load and still provide a reduced-voltage start. The belt life is extended because the lower starting torque causes less wear. The Energy Saver feature is used when the mill is running lightly loaded. The compact size of the SMC-50 controller, along with the built-in overload feature, lets the controller fit into the available panel space.

The SMC Flex controller is also a good candidate for this application because it can adjust the start time and current limit. The SMC Flex controller does not have energy saver mode.

The SMC-3 is not appropriate for this application.

Bark Hogs

Challenges with bark hogs are very similar to those associated with hammer mill applications.

Shredder with Soft Start

Problem

Because of power company restrictions, a metal shredder requires a reduced-voltage start. Occasionally, a jam occurs during the shredding process. Additionally, the equipment runs unloaded for long periods. An autotransformer-type starter was used previously. Figure 60 illustrates this scenario.

Figure 60 - Shredder with Soft Start

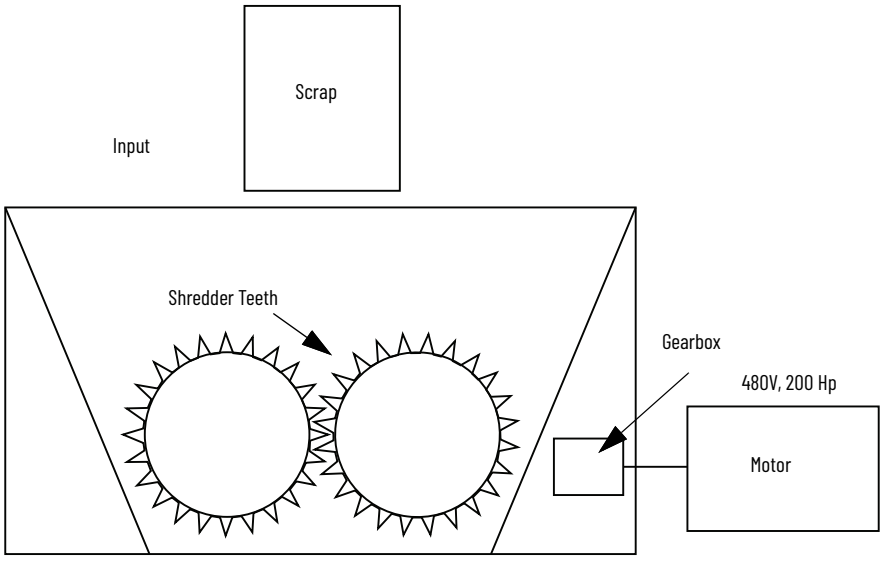

Solution

The SMC-50 controller is installed, facilitating a reduced-voltage start. The controller also provides jam detection, which helps protect against excessive motor heating when a jam condition occurs. The Energy Saver feature of the SMC-50 controller reduces the voltage to the motor when the motor is running lightly loaded. The built-in overload feature of the controller saves panel space. A jam alarm is also set. This allows the operator to use the slow speed in reverse feature to try and unjam the product without needing to send someone out to clear the jam. Once the jam is cleared, the process continues normally.

The SMC Flex controller is also a good candidate for this application because it has current limit functions. The SMC Flex controller does not have energy saver mode.

The SMC-3 is not appropriate for this application.

Bandsaw with Soft Start

Problem

Because of the remote location of the facility and power distribution limitations, a reduced voltage starter is needed on a bandsaw application. The saw is turned off only during shift changes. When the saw blade becomes dull, the motor draws more current. Therefore, an ammeter is required to meter the application for jam conditions. Single phasing of the motor is also a problem because of distribution limitations. Figure 61 illustrates this scenario.

Figure 61 - Bandsaw with Soft Start

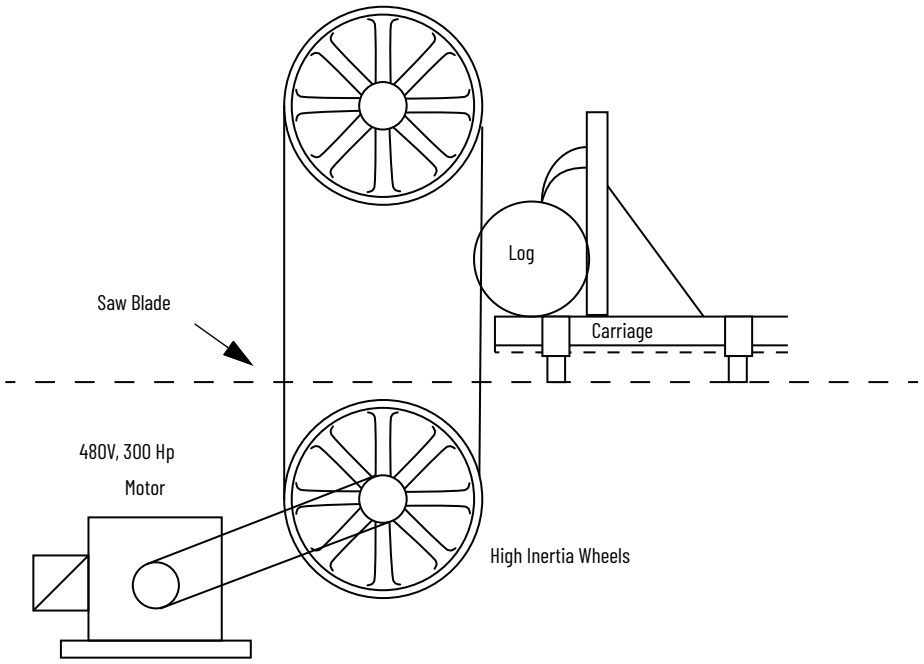

Solution

The SMC-50 controller is installed to provide a reduced-voltage start, which minimizes the starting torque shock to the system. The Energy Saver feature activates whenever the bandsaw runs lightly loaded. The current monitoring and jam detection features of the SMC-50 controller are implemented, saving panel space and the cost of purchasing dedicated monitoring devices. The controller's built-in programmable overload protection eliminates the need for separate overload protection. The SMC-50 controller's diagnostic capabilities can help to detect single phasing and use current imbalance data to shut the motor off accordingly.

The SMC Flex controller does not have energy saver mode but has some alarm and fault imbalance capabilities.

The SMC-3 is not appropriate for this application.

Ball Mill with Current Limit Start

Problem

An across-the-line starter starts the motor in a ball mill application. The uncontrolled start damages the gearbox, resulting in maintenance downtime, and the potential for the loss of the product (paint) being mixed. Line failures are a frequent problem. The application requires prestart and running protection and an elapsed time meter to monitor the process time. Communication capability is desired, and panel space is limited. Figure 62 illustrates this scenario.

Figure 62 - Ball Mill with Current Limit Start

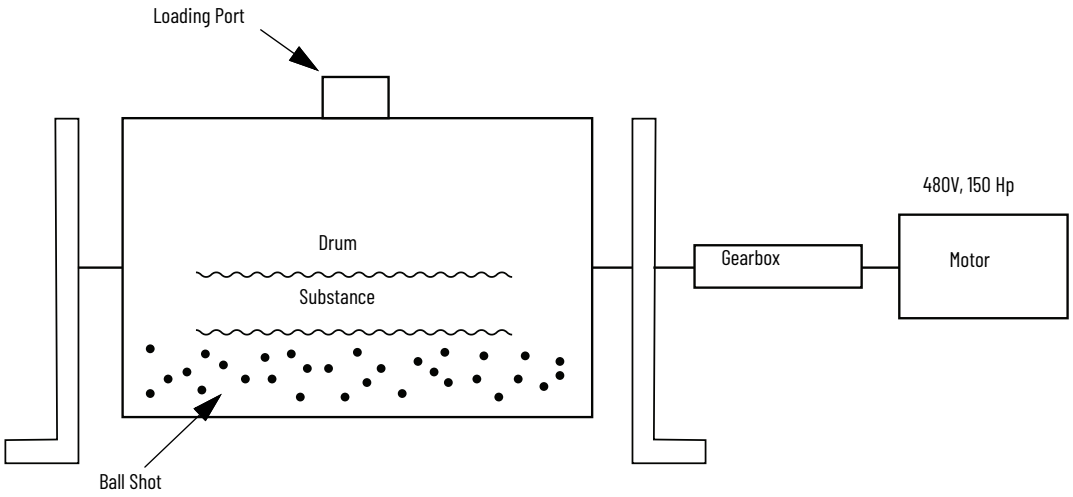

Solution

The SMC-50 controller is installed. It is programmed for a 26-second current limit start, which reduces the starting torque and the damage to the gearbox. The metering feature of the SMC-50 controller contains an elapsed-time meter, which could monitor the process time of the ball mill. The optional communications capabilities of the controller allow it to communicate the process time to the PLC, which could remotely stop the ball mill. The line diagnostics required in the application are standard in the SMC-50 controller, and the built-in overload protection saves panel space.

The SMC Flex controller would also do well in this application.

The SMC-3 controller is not appropriate for this application because of its limited diagnostics and lack of communication capability.

Ball Mill Soft Start with Accu-Stop

Problem

An across-the-line starter is used in a ball mill application. An electronic braking package stops the mill. The mill has to be jogged excessively to position the port for loading. The starting torque surges are causing gearbox problems. The application requires a cost-effective method to position the mill and control the stopping. Figure 63 illustrates this scenario.

Figure 63 - Ball Mill with Accu-Stop

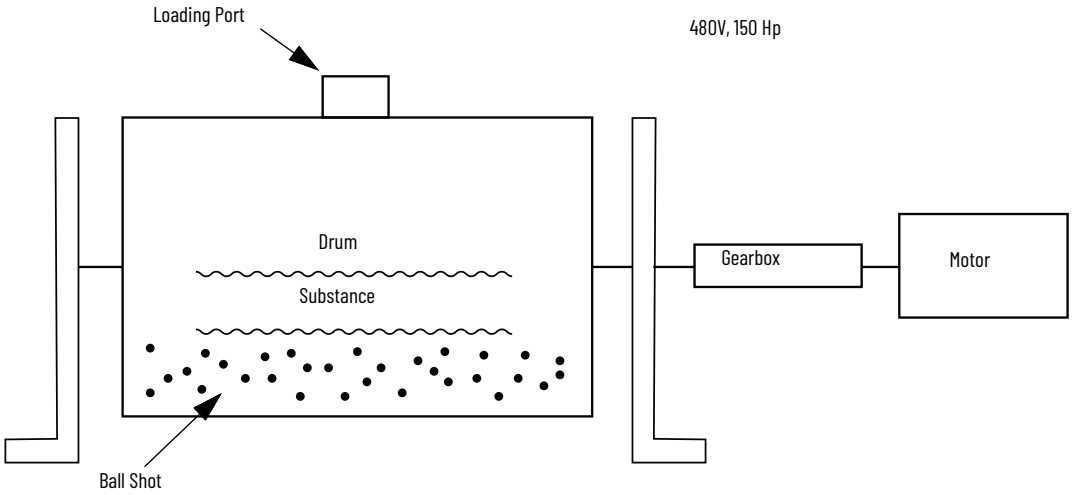

Solution

The SMC-50 controller is installed on the mill. The Accu-Stop feature allows the drum to brake down to 15% slow speed and rotate the loading port into position before stopping. The SMC-50 requires less space and power wiring than the across-the-line starter and braking package.

The SMC Flex controller has fixed slow speed capabilities along with the ability to use Accu-Stop.

The SMC-3 controller does not have slow speed capabilities and is therefore not appropriate for this application.

Smart Motor Braking

The forest products industry is one of the most dangerous industrial environments. Very sharp and fast-turning saw blades and moving products are common. Many of these saw blades are large and have a lot of mass. It is not uncommon for it to take 15 to 30 minutes or longer for the blade to coast to a complete stop.

Smart Motor Braking (SMB) is an effective way to stop a motor much faster than coast-to-rest methods. The average time to stop using SMB is 1.5…4 times the motor starting time. Stopping a large mass faster than coast uses more some energy, so you will need to consider the following points.

1. Braking is hard on the motor windings because more current is used to stop a load that generally takes many minutes to stop on its own.
2. You can hear noise, such as moans and groans of all kinds, during the braking process.
3. SMB produces some harmonic distortion during stopping, but the levels are somewhat insignificant as compared to the fundamental (typically < 10%) frequency.
4. SMB is not intended to be used as an emergency stop. Many factors go into using a safety function. The purpose of SMB is for routine use of stopping a mass for maintenance or other similar application.
5. Braking is hard on motors, but cannot create more energy than the motor demands.
6. Settings above 300% FLA can play havoc with power systems and cause nuisance overload trips or other issues.
7. A solid power supply is critical for consistent braking. Generators should be sized for minimum 3x motor FLA to work effectively in braking.

Bandsaw with Soft Start and SMB Option

Problem

A bandsaw application requires a reduced-voltage start because of power company restrictions. A brake package is required to reduce the stopping time of the saw. An autotransformer was previously used to start the saw. The saw is now stopped by sawing down. Sawing down is a process of running logs through the saw after the motor has been de-energized, which results in large amount of scrap lumber. Other stopping methods using dedicated braking devices have been investigated, but were unacceptable because of overly complex installation. Other stopping methods require panel space for the brake module, brake contactors and timers, and they offer no zero-speed detection. Figure 64 illustrates this scenario.

Figure 64 - Bandsaw with Soft Start and SMB Option

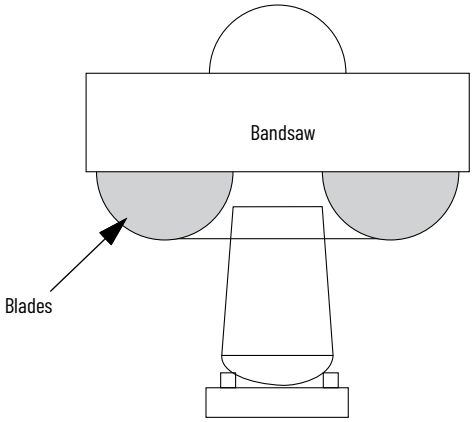

Solution

The SMC-50 controller installed and it is configured to use the SMB option. The controller provides the reduced-voltage start needed to meet the power company restrictions. The SMB operation does not require DC braking contactors. The starting and stopping control is furnished in a single modular design, providing ease of installation.

The SMC Flex controller using the SMB option control module is also a possible solution.

The SMC-3 controller is not appropriate for this application.

Bandsaw with Soft Start and Slow Speed with SMB

Problem

To change the saw blade, a bandsaw requires 25 minutes to coast to a stop. It requires a braking package to reduce the stopping time. Other methods using dedicated braking devices were investigated but were unacceptable because of overly complex installation. These methods require additional panel space for the brake module, brake contactors, and timers. Because of potential alignment problems, it is dangerous to bring the saw up to full speed after installing a new blade. Figure 65 illustrates this scenario.

Figure 65 - Bandsaw with Soft Start and slow speed with SMB

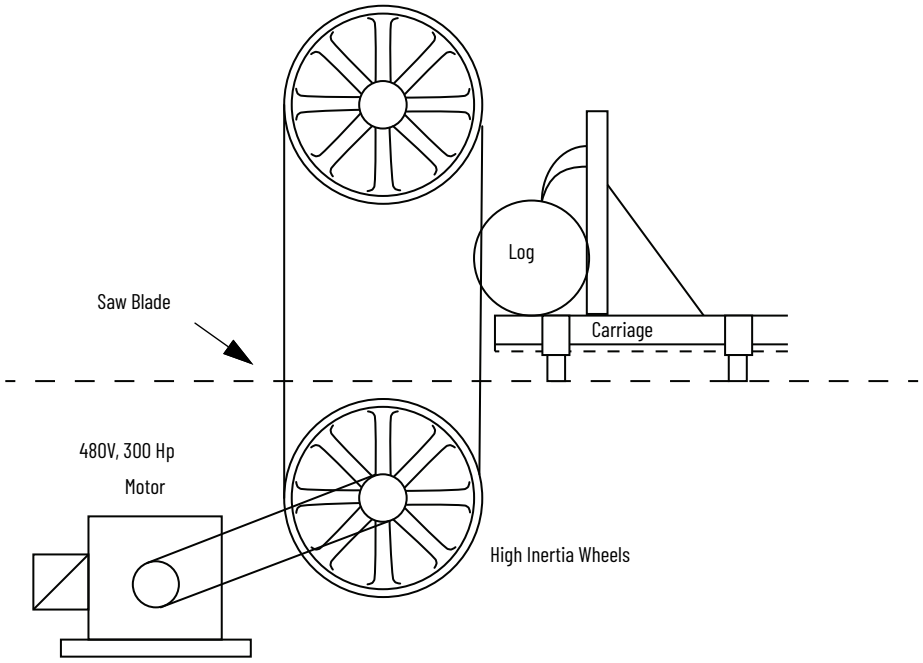

Solution

The SMC-50 controller, which has a selectable slow speed with braking option as standard, is installed. It provides a user-selected slow speed, allowing the user to inspect the saw blade tracking before the motor is brought to full speed. The braking option of the SMC-50 controller does not require additional panel space or DC braking contactors. Starting and stopping control is furnished in a single modular unit, providing ease of installation.

The SMC Flex controller using the SMB option control module is also a possible solution, but with fixed slow speed operation.

The SMC-3 controller is not appropriate for this application.

Centrifuge with Current Limit Start and SMB

Problem

A centrifuge requires a reduced-voltage start because of power company restrictions. The high torque during starting is damaging the gearbox. A shorter stopping time than the present 15 minute coast-to rest is desired. The long stop time causes delays in the production process. A Wye-Delta starter with a mechanical brake is currently in use. A zero-speed switch is used to release the brake. The mechanical brake requires frequent maintenance and replacement, which is costly and time consuming. Both the mechanical brake and zero-speed switches are worn out and require replacement. Figure 66 illustrates this scenario.

Figure 66 - Centrifuge with Current Limit Start and SMB

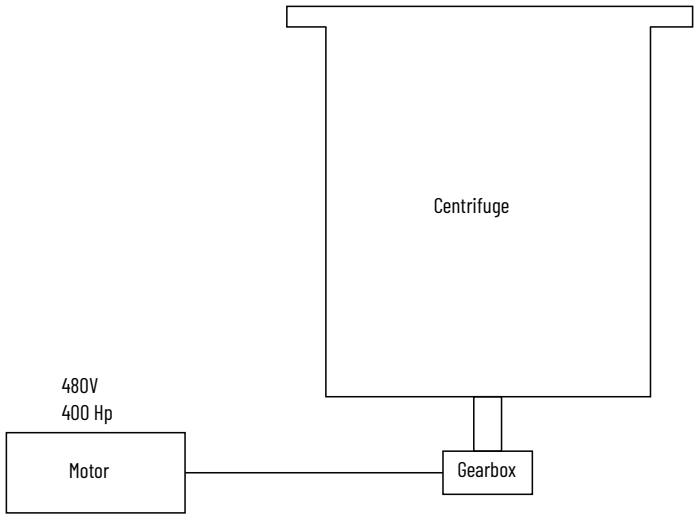

Solution

The SMC-50 controller is installed and wired inside-the-delta to the wye-delta motor and programmed to smart motor braking. The controller is set for a 28-second, 340% current limit start, meeting the power company requirements and reducing the starting torque stress to the gearbox. SMB allows the centrifuge to stop in approximately 1 minute. The SMC-50 controller with SMB programmed does not require additional mounting space or panel wiring. The controller is mounted in a panel that is considerably smaller than the previous controller. As an added benefit, the controller does not require frequent maintenance and can sense zero speed without using a feedback device.

The SMC Flex controller is also a good fit for this application.

The SMC-3 controller is not appropriate for this application because of the extended ramp time and its lack of SMB capability.

Hammermill with Current Limit Start and SMB

Problem

A hammermill requires a reduced-voltage start because of power company restrictions. A stopping time less than the present 5 minute coast-to-rest is desired. To save panel space, the customer wants to incorporate both starting and stopping control in the same device. Figure 67 illustrates this scenario.

Figure 67 - Hammermill with Current Limit Start and SMB

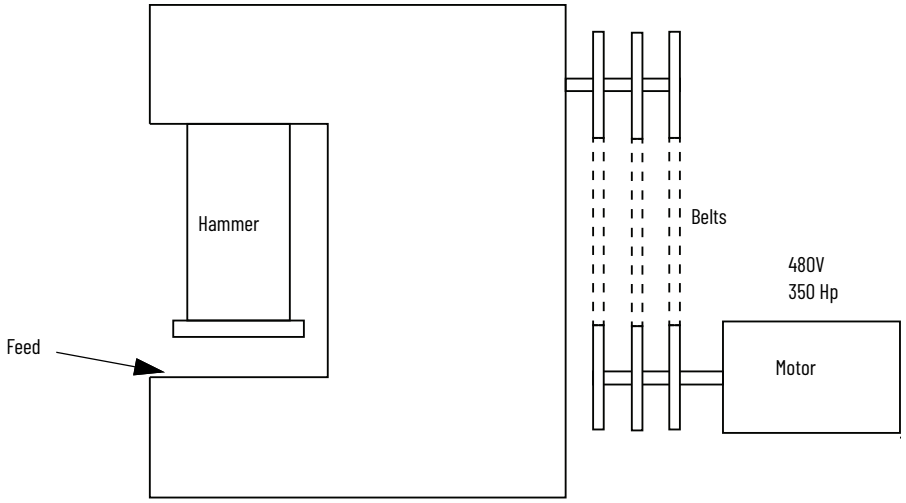

Solution

The SMC-50 controller configured with SMB is installed. A 23-second, 450% current limit acceleration is programmed, meeting the power company requirements and reducing the mechanical stress on the belts during startup. The braking function is accomplished without additional power wiring, panel space, or contactors. The controller detects zero speed without additional sensors or timers. The current limit start, braking, and overload protection are all contained in the same modular package.

The SMC Flex controller is also a good fit for this application.

The SMC-3 controller is not appropriate for this application because of its lack of SMB capability.

Ball Mill with Soft Start and SMB

Problem

Across-the-line starts are damaging the gearbox on a ball mill, resulting in extra maintenance time to keep the mill operating. Due to the high inertia of the load, the coast-to-stop time is approximately five minutes. The application requires a soft start and braking package in a single controller because panel space is at a premium. Figure 68 illustrates this scenario.

Figure 68 - Ball Mill with Soft Start and SMB

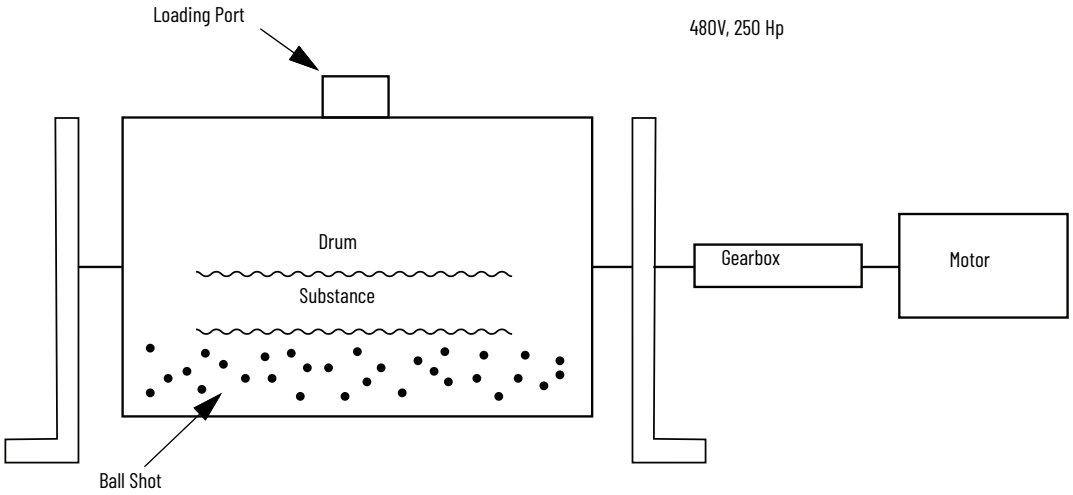

Solution

The SMC-50 controller is installed on the ball mill and set to use the SMB setting. The soft start reduces the shock to the gearbox on startup. The SMB option reduces the stopping time and increases the productivity of the mill. The SMC-50 controller is installed in the same space in which the previous contactor had been mounted. No additional power wiring is required.

The SMC Flex controller is also a good fit for this application.

The SMC-3 controller is not appropriate for this application because of its lack of SMB capability.

Compressor

Compressor applications vary depending on the types of motors and loading when starting. Air and ammonia compressors are examples of good fits for a soft starter that runs efficiently at 100% voltage while using a voltage ramp, such as soft start or linear acceleration mode, during the starting process.

Compressor with Soft Start

Problem

A compressor OEM exports its equipment into foreign markets. Based on the final destination of the product, the compressors have to be able to meet many different voltage and frequency requirements. Due to power company requirements and mechanical stress on the compressor, reduced voltage starting is required. This makes ordering and stocking spare parts difficult. Customers want to save energy because this is typically one of the larger motors in the plant and it frequently runs lightly loaded. Because of the size of the motor, the incoming line voltage unbalance causes excessive heating in the motor. Figure 69 illustrates this scenario.

Figure 69 - Compressor with Soft Start

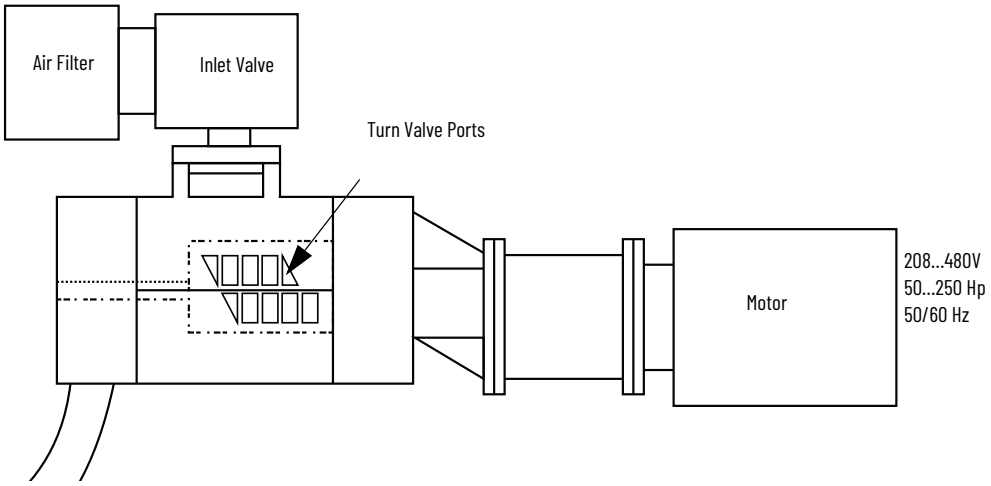

Solution

The SMC-50 controller is installed and set for an 18-second Soft Start, which reduces the voltage to the motor during starting and meets the power company requirements. Reducing the voltage reduces the starting torque, minimizing the shock to the compressor. Panel space is saved because the SMC-50 controller has a built-in overload feature. The Phase Rebalance feature automatically adjusts the voltage output to balance the three-phase currents drawn by the motor. The Energy Saver feature optimizes the voltage to the motor while it is running unloaded.

Neither the SMC Flex or the SMC-3 controller have phase rebalance or have energy saver, and are therefore not suitable for this application.

Tumbler

Tumbler with Linear Acceleration and Slow Speed

Problem

A tumbler used in a nail finishing process breaks the drive chain because of uncontrolled acceleration from the across-the-line starting. A reversing starter is needed to position the drum to the top position for loading the product. Because of the lack of controlled acceleration, numerous jogs are used to position the drum. Stopping time is not a concern in this application. When in maintenance mode, the tumble starts unloaded, reaching full speed very quickly. A second starting ramp, for unloaded conditions, is desired. Single phasing of the motor that causes premature motor failure is a frequent problem. Figure 70 illustrates this scenario.

Figure 70 - Tumbler with Linear Acceleration and Slow Speed

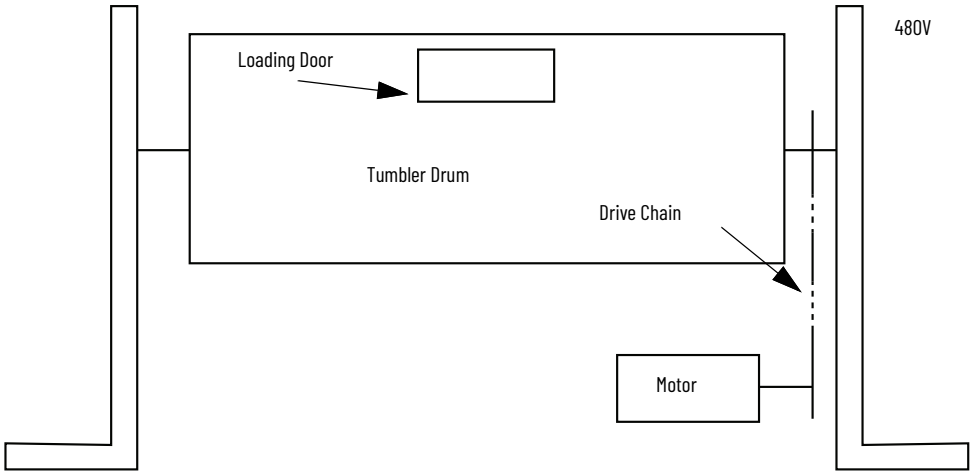

Solution

The SMC-50 is installed and linear acceleration is used to provide a controlled start when the tumbler runs both loaded and unloaded. Because the linear acceleration is not as load dependent as other starting methods, there is no need to have two different start profiles. The implementation of the slow speed function enables forward and reverse ±15% full speed. This function enables the drum to move forward and reverse directions at slow speed without using reversing contactors. Along with the starting, stopping, and slow speed features, the SMC-50 controller also has fault indicators for a 'line fault' that helps prevent the motor from restarting if it is detected.

The SMC Flex controller has fixed slow speed but does not have energy saver mode.

The SMC-3 controller is not appropriate for this application.

Tumbler with Soft Start and SMB

Problem

A tumbler used in the de-burring process breaks the drive chain because of uncontrolled acceleration from the across-the-line starting. To increase production on the drum, the coasting time on stop must be reduced. Previous solutions used a separate soft start package plus a motor brake, which required additional panel space and power wiring. The new solution needs a small enclosure size and simplified power wiring to reduce the cost of the controls. Because a PLC is controlling several other processes in the facility, communication capabilities are desired. Figure 71 illustrates this scenario.

Figure 71 - Tumbler with Soft Start and SMB

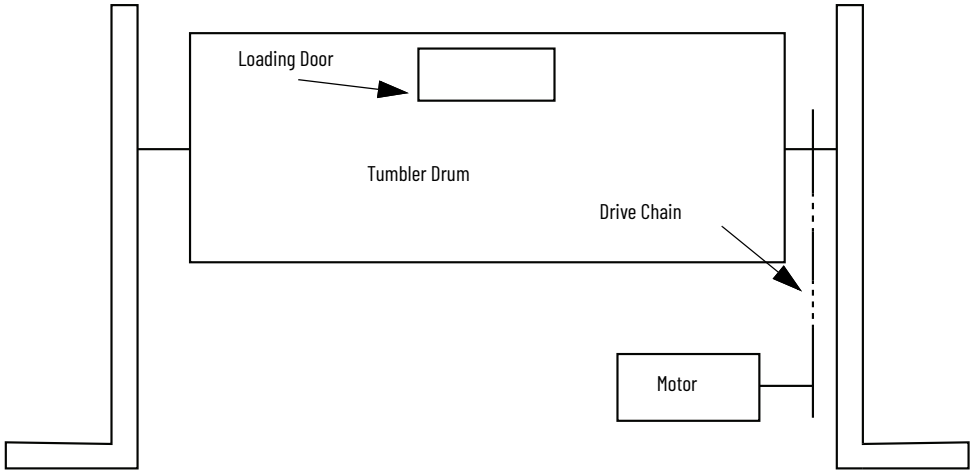

Solution

The SMC-50 controller is installed and set to use the SMB setting. The Soft Start feature provides a smooth acceleration of the drive chain, which reduces downtime. The controlled acceleration simplifies positioning for loading/unloading. The SMB feature allows the operators to stop the system quickly, improving productivity. The SMB feature does not require additional panel space or wiring. The built-in overload protection on the SMC-50 controller eliminates the need to mount an external overload relay in the enclosure, saving more panel space. The communication option of the SMC-50 controller allows remote starting and stopping of the process from a PLC using multiple communication protocols.

You can also use the SMC Flex controller with the SMB control module for this application. A communication module can also be mounted on board.

The SMC-3 controller is not appropriate for this application because it lacks communication capabilities and SMB functionality.

Tumbler with Accu-Stop Function

Problem

A tumbler drum used in a hide processing plant requires a controlled acceleration to help prevent the drive chain from breaking. The customer also wants to minimize the loading and unloading time. The drum coasts for a long period of time before stopping for unloading. A soft starter with electronic brake is currently being used. This method requires excessive jogging for loading and unloading, which results in extended production times. It also requires additional panel space and wiring for the brake. Consequently, higher installation costs are incurred. Figure 72 illustrates this scenario.

Figure 72 - Tumbler with Accu-Stop Function

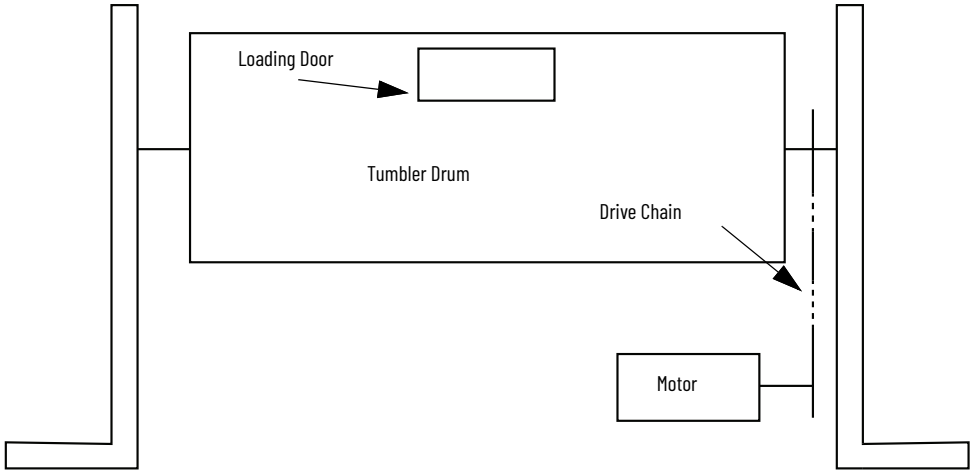

Solution

The SMC-50 controller using the Accu-Stop feature is installed. This allows the drum to be positioned for loading using the Preset Slow Speed. For unloading, the drum is rotated at programmed Slow Speed and then accurately stopped. This increases the productivity of the loading/unloading cycle. The SMC-50 controller requires no additional panel space or power wiring, facilitating a smooth retrofit and reducing the installation costs.

The SMC Flex controller also uses the Accu-Stop function with fixed slow speed settings and can be applied in this scenario.

The SMC-3 controller is not appropriate for this application.

Slow Speed

The SMC Flex controller uses cycle skipping, which is typical of many soft starts where the current pulses are controlled by the silicon-controlled rectifier (SCR) and fired for portions of every few line cycles, allowing for slow speed control. Torque during slow speed with this method is limited.

Another way to control slow speed is by using an SMC-50 soft starter. The SMC-50 soft starter has an adjustable forward and reverse capability from 1...15% of full speed. In other words, if the motor is running at full speed at 1800 rpm, the SMC-50 soft starter can be selected to run from -270...+270 rpm.

Instead of skipping cycles and then firing the thyristors (SCRs), the magnitude and duration of the current pulse is controlled approximately every cycle. The produced pseudo sine wave provides more stable control and programmable slow speed. A patented algorithm allows torque to be more controlled and developed in this method than in the cycle skipping method.

Unlike the typical soft starting methods in which percent resultant torque is approximately the square of the voltage that is applied, the torque at slow speed is higher. The slow speed resultant torque is higher due to firing approximately every cycle. This method provides a stable method of slowly rotating a motor shaft forward or in reverse without using a reversing contactor. The firing consistency translates to less wear and tear on windings.

Typically, for soft starters, the longer the time in slow speed, the more current is being drawn from the motor, and the hotter the SCRs get. Running slow speed on soft starters can only be done for short periods of time due to heat buildup in the motor and the SCRs.

Rock Crusher with Soft Start and Reverse Slow Speed

Problem

Because of the remote location of a rock quarry, the power company requires a reduced-voltage start on all motors over 150 Hp. The starting current on these large motors causes severe voltage dips when it strains the capacity of the power system. When the rock crusher is overloaded, the current draw by the Wye-Delta-connected motor increases, which requires current monitoring capabilities within the starter. Because the conveyor that feeds the rock crusher is controlled by a PLC, communication between the starter and a PLC is necessary. When the rock crusher runs, it occasionally stalls or jams. Figure 73 illustrates this scenario.

Figure 73 - Rock Crusher with Soft Start and Reverse Slow Speed

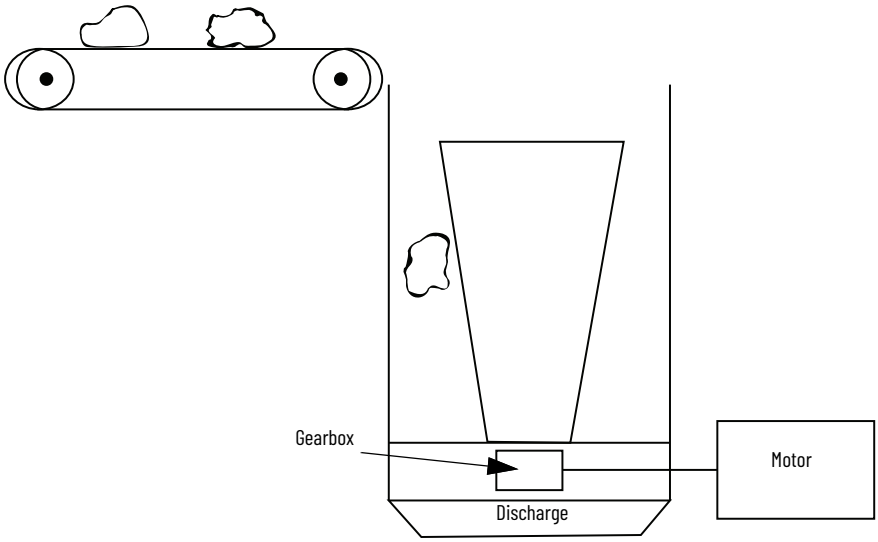

Solution

The solid-state SMC-50 controller is installed, meeting the power company requirements for a reduced-voltage start. The motor is wired inside-the-delta, which saves panel space and lets you use the same wires to the motor. The metering capabilities of the SMC-50 controller allow the motor current draw to be monitored. With the optional communication capabilities, the motor current is communicated to the PLC. When the motor current reaches a specified limit, the conveyor that feeds the rock crusher can be slowed by configured alarms on the SMC-50 controller. By slowing the conveyor, a jam condition in the rock crusher is avoided. The stall and jam detection capabilities of the SMC-50 controller shut off the motor when a stall or jam condition occurs. By using the jam alarm, reverse slow speed is also used to change the rotation direction to unplug the jam in the crusher.

The SMC Flex controller can also be used inside the delta and uses one of two fixed slow speeds forward, or two in reverse.

The SMC-3 controller does not have slow speed capabilities.

Resistive Loads

Solid- state contactors have been used for a long time, typically at zero cross, meaning that they turn on and off at zero cross for resistive load applications. You need an external control method to control the solid-state contactors, in order to control the resistive heating. Zero cross typically cycles on and off for so many cycles to achieve the desired temperature. The SMC-50 controller can directly control three-phase connected resistive loads by using SCR phase angle firing, which uses a PLC via communication, analog input, or DeviceLogix. By using a reference source, the controller can have the output remain on from 1...100% full voltage until commanded off. You can change the value of the reference source while the SMC-50 controller is in a run state. The output voltage varies in response to the reference source (Output V Ref, Analog Input or DeviceLogix).

You cannot use the resistive load feature on motor loads.

In resistive control mode, the tuning process still takes place, but is different than that of being connected to a motor. Current limit levels are still active.

When you use the resistive load feature, the output voltage to the resistive load is similar to the Full Voltage starting mode when using Output V Ref. Any type of ramping created is accomplished by using logic code, analog signal, or DeviceLogix.

Because there is a wide variety of possible resistive loads, the most universal control method is phase angle control, which is the method used by the SMC-50 controller. High hot-to-cold ratios of heaters are well suited for phase angle firing. You can use the SMC-50 controller to dry out heating resistors before full working voltage is applied, helping to prevent damage to the element.

When you use the SMC-50 controller on heater loads, it provides all of the running protections that are available with induction motors. Unlike using a standard solid-state contactor that needs external overload and protection, protection is built into the SMC-50 controller in a compact package.

Using this mode with the integrated bypass version is not recommended as unit will quickly trip on an SCR overtemperature fault.

Programming

You can have direct control from most analog signals via the 150-SM3 optional analog card. You can control the SMC-50 controller with or without the aid of a programmable logic controller (PLC). For example, you can use the free Connected Components Workbench Software or a 20-HIM-A6 module.

Figure 74 - Connected Components Workbench Software and 20-HIM-A6 Interface Module

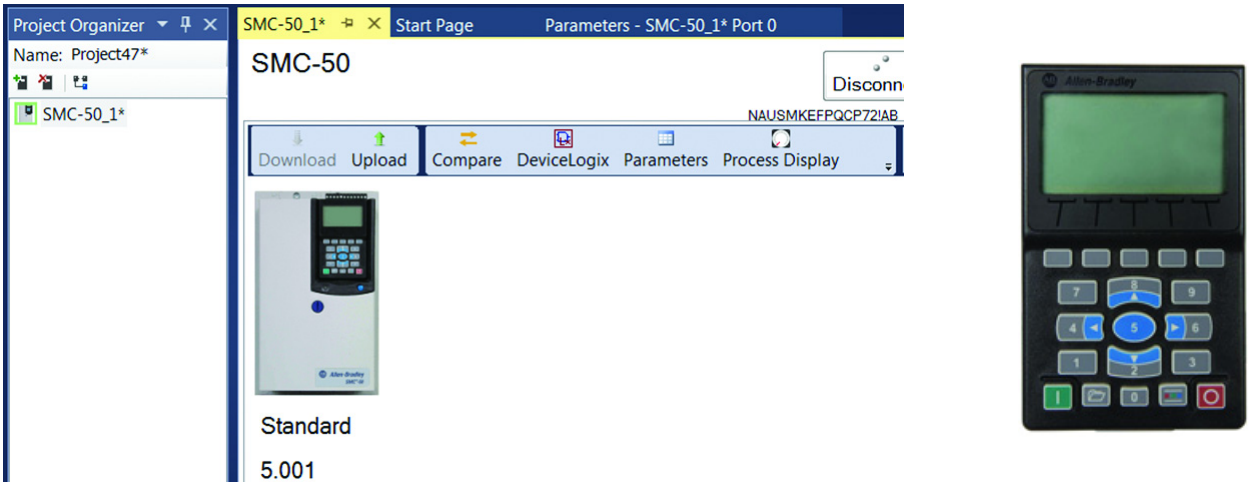

You are required to set the following parameters.

- Parameter 46, Line Voltage
  - Set this value to the actual voltage of the line, not in general terms. For example, if the voltage measures 460V, enter 460V, not 480V. The accuracy of the voltage output (parameter 349) depends on the value that you enter.
- Parameter 53, Current Limit
  - This parameter limits the current to a percentage of the value of parameter 78. For example, if parameter 78 is set to 150 A, and parameter 53 is set to 100%, the output (parameter 349) of the SMC-50 controller is limited to 150 A.
- Parameter 78, Motor FLC
  - Set this value to line current
- Parameter 347, Load Type
  - Set this value to resistive load

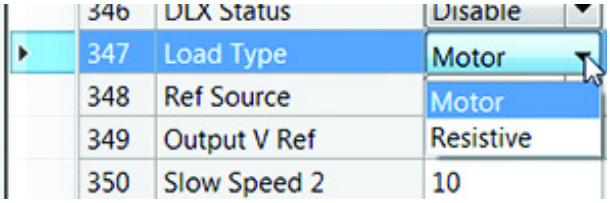

- Parameter 348 Reference Source
  - Use this parameter to select the reference source: Output V Ref, Analog Input (Port 7 – 9, Input 1 or 2), or DeviceLogix Output 1 and 2.

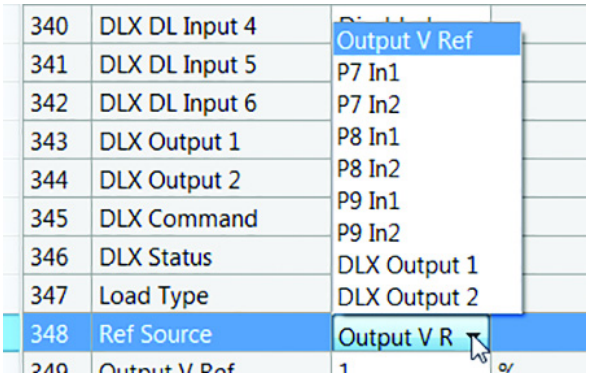

- Parameter 349 Output Voltage Reference
  - This parameter allows direct control of output if the output is controlled via communication.
- Parameter 148 Logic Mask
  - Logic Mask enables control (start – stop function) via communication port or HIM to control the SMC-50 controller.

Parameter		Bit Number	DPI Assignment	Access	Units [default]
Number	Name				
148	Logic Mask	0 - NA 1 2 3 4 5 - 15 NA	Port 0 - NA Port 1 Port 2 Port 3 Port 4 Port 5 - 15 NA	R/W	Bit = 0 [disabled] Bit = 1 enabled
149	Logic Mask Act			R	Bit = 0 [disabled] Bit = 1 enabled [Follows Logic Mask]

Resistive Control Via Communication

You can have direct control from a PLC to the SMC-50 controller via communication such as Ethernet, by setting parameter 348, Reference Source, to Output V Ref and parameter 349 to the value that you want (1...100%). Whatever is sent from the PLC program to the SMC-50 controller will be put on the output of the SMC. You need to select the logic mask for DPI port 4 for control.

EXAMPLE:

- Parameter 46: line voltage
- Parameter 78: motor FLC set to line current
- Parameter 148: logic mask set to port 4 (bit 4)
- Parameter 347: load type set to RESISTIVE
- Parameter 348: reference source set to OUTPUT V REF
- Parameter 349: output voltage reference programmed to 50%

347	Load Type	Resistive		1	Motor	0	1
348	Ref Source	Output ...		0	Output V Ref	0	8
349	Output V Ref	50	%	50	1	1	100

- The output of the SMC-50 controller is 50% voltage (entered in parameter 46) until you change it or turn it off.

In this scenario, a PLC command on parameter 349 dictates the controller output. In the PLC rack, a thermocouple or RTD card feeds data to the PLC processor, which scales that information to the SMC-50 controller. Using a PID loop in the PLC controller program allows you to control temperature changes. The output is 1...100% output for this application. The PLC can also use the data from the PLC and directly control the output parameter 349, replicating the result you get from using a 150-SM3 analog card.

Table 132 lists the communication protocols and corresponding option cards that are available.

Table 132 - Communication Card Selection by Protocol Type

Protocol Type	Cat. No.
DeviceNet	20-COMM-D
ControlNet	20-COMM-C
PROFIBUS®	20-COMM-P
RS-485	20-COMM-S
InterBus	20-COMM-I
EtherNet/IP	20-COMM-E
Dual Port EtherNet/IP	20-COMM-ER
RS485 HVAC	20-COMM-H
ControlNet (Fiber)	20-COMM-Q
CANopen	20-COMM-K

Analog Control

You can have direct analog control when you use the optional 150-SM3 analog card. The 150-SM3 card offers selectability of ±10V, 0...10 V, 0...5 V, 0...20 mA, and 4...20 mA. Once you have programmed the controller, it can produce the range of 1...100% output. You can place the analog card in one of three ports (7, 8 or 9) on the SMC-50 controller. Figure 75 illustrates the analog input wiring.

Figure 75 - Analog Input Wiring

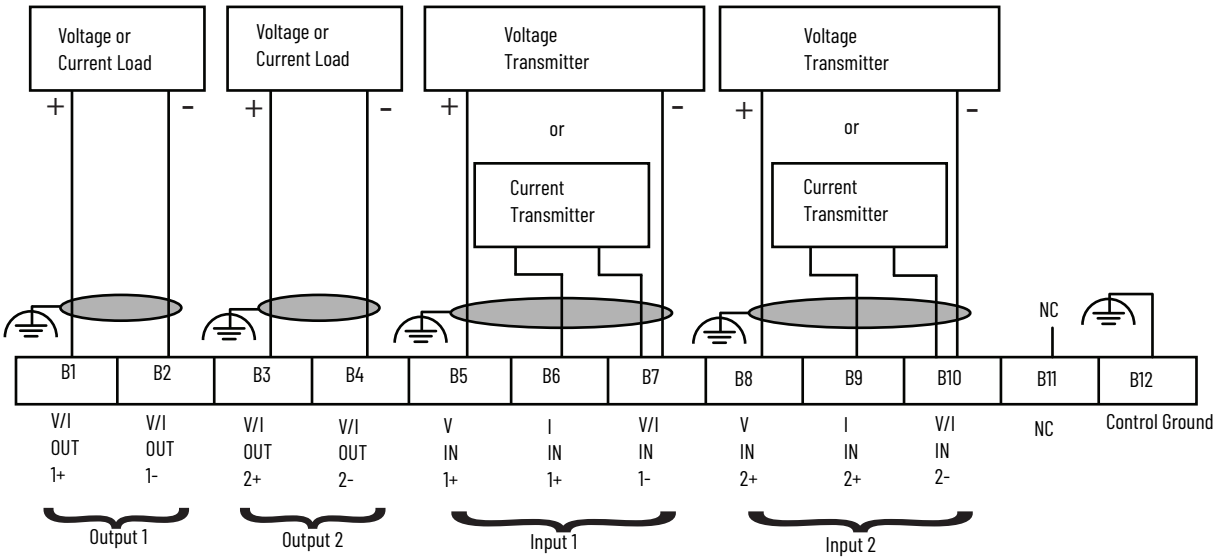

Example:

- Parameter 347: load type set to RESISTIVE
- Parameter 348: reference source set to P7 In1 (Port 7, input 1)
- Program the 150-SM3 card.
- Select X(Port).7 input range to 0...20 mA
- The 150-SM3 card reads 10 mA
- The output of the SMC-50 controller is 50% voltage (entered in parameter 46) until you change it or turn it off.

Figure 76 - Analog Input Scaling

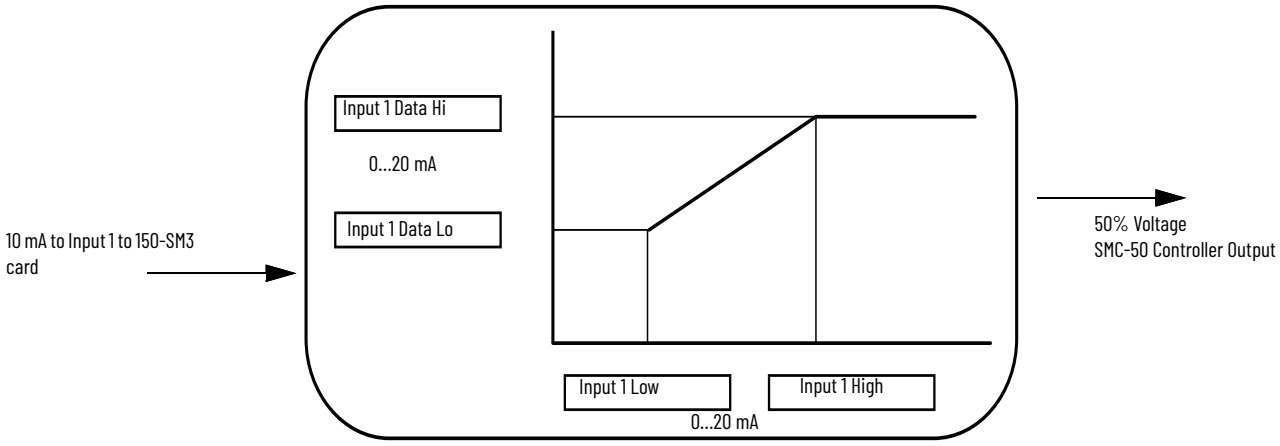

DeviceLogix

You can also use DeviceLogix with the SMC-50 controller on resistive loads. You can use one of two outputs on the DeviceLogix communication card to control the output of the SMC-50 controller. You can only program the DeviceLogix communication card on the SMC-50 controller within the free Connected Components Workbench Software. Resistive load functionality is only available on FRN 5.001 and later.

Example:

- Parameter 347: load type set to RESISTIVE
- Parameter 348: reference source set to DLX Output 1

	347	Load Type	Resistive		1	Motor	0	1
▸	348	Ref Source	DLX Output 1		0	Output V Ref	0	8

- Create the DeviceLogix program with A Out 1 (DeviceLogix Analog Out 1)

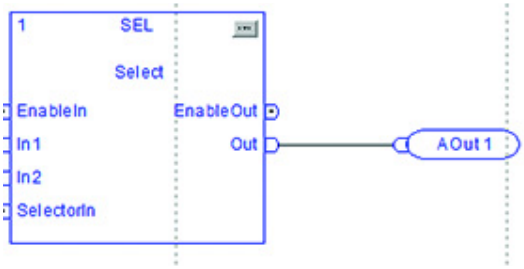

- The output of the SMC-50 controller is set from 1...100% of the value of A Out 1.

Tank Heater with Resistive Load

Problem

A customer is burning up standard contactors while cycling power on and off to achieve heater control for a tank of water that will be used to mix with chemicals at a certain temperature. Solid-state contactors are the best fit for high duty cycle. However the customer also wants to have communication and overload protection. The customer is planning to use a controller reading thermocouples and feeding information to an analog card on a ControlLogix rack. That signal will be used to turn on and off contactors through PLC outputs. This process leaves unaddressed concerns about duty cycle and overshoot (hysteresis), and so it requires more programming. The application also requires that no excessive current is applied to the cabling. Figure 77 illustrates this scenario.

Figure 77 - Tank Heater with Resistive Load

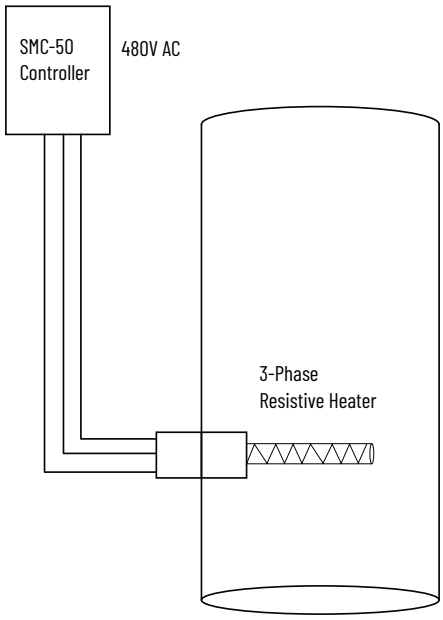

Solution

The SMC-50 replaces all standard and solid-state contactors in the application. The SMC-50 controller takes the feedback that the thermocouples send to the signal conditioner and sends it to the 150-SM3 analog card. This method allows direct control of the SMC-50 controller output to the resistive heaters by simply programming the reference source. By utilizing the current limit feature, the current is not allowed to exceed the level that is prescribed by the customer. The SMC-50 controller output increases or decreases depending on the input signal, without the need to turn the signal on and off.

Sizing and Selection Tools

Properly sizing an SMC controller provides the best chance of starting a motor in the smoothest and most efficient way possible. Both thermal and estimation wizards are available to help assist you with this process.

Several types of applications need closer scrutiny to confirm that you have sized your controller properly.

- Starts longer than 30 seconds
- High inertia loads
- Frequent starts in a short period of time (high duty cycle)
- Predicting start and stop times of an application
- Elevation above 2000 meters
- High ambient temperature

You can access the SMC Estimation Wizard and SMC Thermal Estimation Wizard at rok.auto/pcdc. You can also access these wizards from within ProposalWorks software by clicking the toolbox icon, as shown in Figure 78. ProposalWorks software is available from rok.auto/systemtools.

Figure 78 - SMC Controller Wizards in ProposalWorks Software

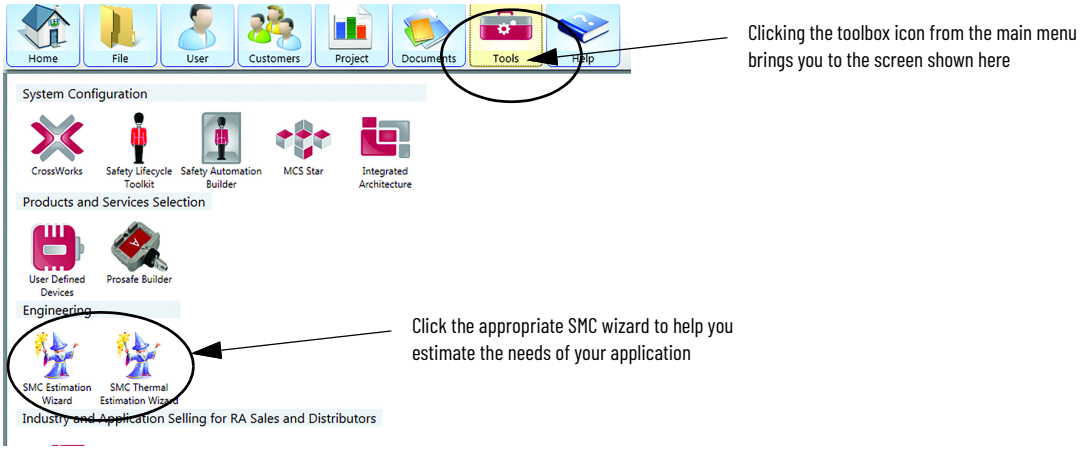

Thermal Wizard

The thermal wizard is designed to help you to estimate the thermal capacity of the SCRs on the SMC controller for the estimated start, stop, and off time. Together, these times comprise the duty cycle.

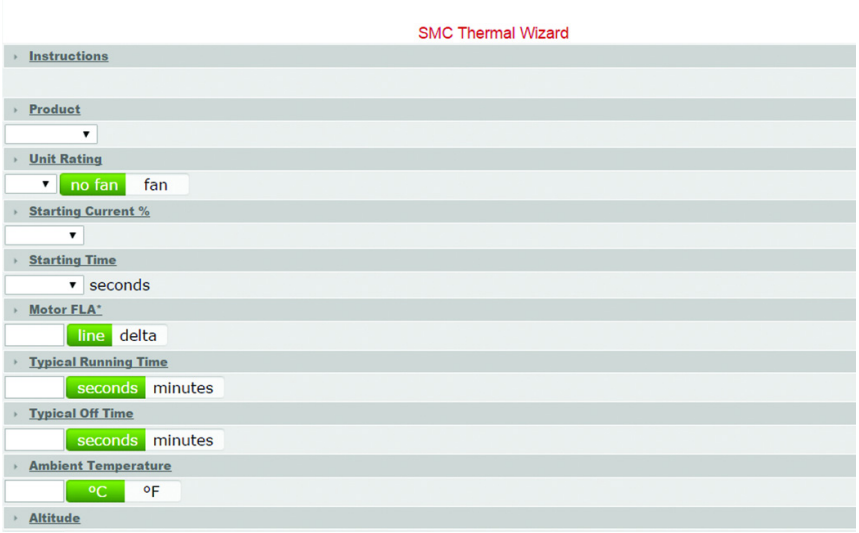

The SMC Thermal Wizard is intended to provide an estimation of the applicability of the SMC products to a given set of operating requirements. The results of this tool are intended to be used as reference only.

To find out whether an SMC controller can perform the task from a thermal perspective, or if you need the next size up, you must set the following tool parameters.

- Unit Rating
  - The rating refers to the maximum current rating for the device, connected as a line controller. For example a 150-F85NBD is capable of 85 A.
- Starting Current
  - This determines the level of current that is allowed during starting. You can use a nominal value of 300 % or 350 % for modeling purposes for most applications.
- Starting Time
  - The starting time represents how long it takes for the motor to reach full speed. This is not always the same as the start time, because the motor getting to full speed is heavily dependent on the load.
- Motor Full Load Amps (FLA)
  - The value in this field is the motor's full load current. You can find this value on the motor nameplate.
- Typical Running Time
  - This represents the actual running time (time the motor runs at full speed without starting or stopping). If normal operation requires many starts and stops, set this time to represent the worst-case condition (shortest time).
- Typical Off Time
  - This represents the actual off time for the application. If normal operation requires many starts and stops, this time represents the worst-case condition (shortest time). In some cases where there is a high duty cycle, you can set this time to 1 second.
- Ambient Temperature
  - The standard maximum temperature is 50 °C for SMC-3 and SMC Flex controllers, and 40 °C for SMC-50 controllers. The thermal wizard can estimate derating up to 60 °C for the SMC-3 and SMC Flex controllers and up to 65 °C for the SMC-50 controller.
- Altitude
  - The value that is used in this field is the altitude in meters. The standard maximum for all SMC controllers is 2000m. The tool provides derating information for altitudes up to 7000 m.

The thermal wizard does not consider system dynamics; it only shows the thermal capacity of the SMC-50 controller. To look at the application itself, including the load and motor data, use the estimation wizard.

Estimation Wizard

Use the estimation wizard to determine how long the motor will take to start using different starting methods, such a current limit and soft start. The tool also calculates the estimated stopping time using smart motor braking. Using the tool helps to determine whether the size SMC controller that you selected is appropriate for the given application. Unlike the thermal wizard, this wizard considers the inertia of the motor and the load.

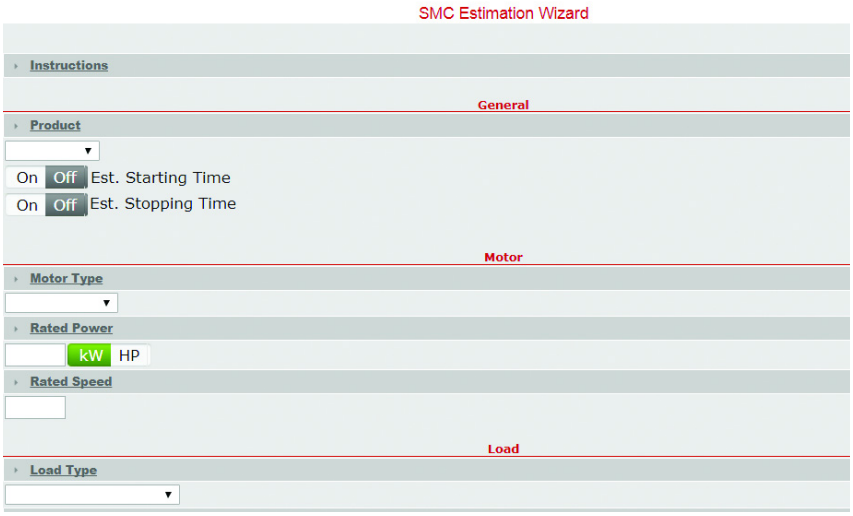

You need to supply values for the following parameters to use the estimation wizard.

- Motor Type
  - This parameter defines the characteristic of the motor torque speed curve; you can usually find the motor type on the motor nameplate. The most common types are NEMA B and IEC N. You can enter a custom curve by selecting the custom type and entering data in the next section
- Rated Motor Power
  - This represents the nominal Hp or kW rating of the motor
- Motor Rated Speed
  - This value represents the motor's nominal speed, not its rated speed. Nominal speed factors in % slip speed. For example, a motor that is rated 1800 rpm typically runs at a slightly lower speed, typically around 1750 rpm. This is the nominal speed. You can usually find this value on the motor nameplate
- Load Type
  - Select the load type that best fits the application that you wish to model. The high-inertia profile uses all the available input parameters. When selecting the other loads, only the % load factor, load inertia, and motor inertia parameters are used.
- Load Inertia
  - This value represents the actual total inertia of the load. Under most conditions, it can be difficult to approximate or obtain the true inertia of the system. In some cases, you may need to get this information from the machine or system designer. In these cases, you need to make some assumptions. The model is a good approximation but should not be considered absolute.
- Load Speed
  - The load speed is the actual running speed of the end mover. For instance, the load speed for a typical bandsaw (bandmill) is the actual speed of the blade (or wheels), which is typically between 500 and 700 rpm. With the load speed entered, the tool automatically calculates the gearing ratio and uses it in other calculations. Variations in the load speed have a large impact on reflected inertia, because it involves a square function. For applications with direct coupling or no change in speed, use the rated speed of the motor.
- Load Factor %
  - This factor represents the ratio of the load torque demand to the capabilities of the motor (for example, a load requires 525 kW, motor is rated 630 kW, load factor is 83.3%). This variable provides the ability to compensate for applications where the motor has been oversized for the load when running at rated speed. For instance, a value of 50% means that the motor has twice as much torque as required while at speed. Common values range from 50% to 90%.

- Motor Inertia
  - This value represents the inertia of the motor. In most high-inertia applications, this value is insignificant. However, it can play an important role in the overall calculation of the total system inertia for large motors. You can usually get this value from the nameplate or motor data sheet.
- % Inefficiency
  - This value equals the dynamic friction factor of the system. Dynamic friction is the amount of energy that is consumed by system components, such as bearings and windage, that helps prevent the load from running forever. This value is only active for high-inertia loads and plays a more important role in estimating braking times. It is often impossible to determine the exact value. However, you can try to determine the coast down time. By setting the braking model for "coast" and then dialing in the % load efficiency so that the stopping time is approximately the time predicted, it will give you a good estimate of the value. If you are unable to estimate this value, use a value of 100%, which represents a worst case condition.
- Starting Type
  - This represents the desired starting mode. This program allows you to select soft start, current limit, and, in some cases, full voltage. The soft start allows the voltage to increase over the start time, while the current limit holds the voltage constant during the start time. Most traditional electro-mechanical methods (that is, Star Delta) are variations of current limit. If you are unsure where to start, choose the default setting of most SMC controllers, which is Soft Start with an initial torque setting of 65 or 70%.
- Torque/Current %
  - Initial current %: this represents the level of current that is allowed during the start. This is only active when you have selected a current limit mode and it is programmable as allowed by the product selected. Because most designs are based in historical references, the best place to start an analysis is with 350% current limit. This produces a torque equivalent to a star-delta type reduced voltage starting method.
  - Initial Torque %: this represents the initial level of torque that will be applied to the motor at zero speed. This value will increase as the voltage is ramped during the start time. This value is only active when a soft start mode is selected and is programmable as allowed by the product selected. A default setting of around 70% is a good place to start with the estimation.
- Braking Type
  - This selection only becomes active when you select a stopping estimation. The selection includes coast to rest or SMB. At this time pump stop and soft stop are not modeled. When you select SMB, you can estimate how long it will take to stop the motor using a specified braking current level.
- Braking Current %
  - This value indicates the level of current that will be applied during SMB. The typical value is between 150% and 300%. It is generally not practical to use more than 300% braking current unless the system and motor have been properly designed to handle the potential impact of increased heating and electrical distribution demands.

The results of this tool do not change the ratings of the device or imply that you can use a device outside of its designed ratings as defined by all applicable electrical codes and standards. The tool is not a substitute for a formal determination by the SMC product engineering staff, nor should it be solely relied on for critical or safety-related applications. It is not designed to replace the engineering responsibility associated with the design or manufacturing of a machine or any of the components.

Wizard Hints

While getting the load information might be impossible to obtain, it may be possible to model the motor characteristics by using the motor's across the line starting characteristics. This is also true for braking when taking the information on how long it takes to coast. You can then adjust settings to match the time of the starting and stopping method; this creates the start/stop profile using the SMC Wizard methods.

You can get most motor data from the motor nameplate. Common rotor inertia values are listed in Table 133 and Table 134.

Table 133 - Rotor Line Inertia—NEMA Ratings

Rated Hp	TEFC				OPD			
	2-Pole	4-Pole	6-Pole	8-Pole	2-Pole	4-Pole	6-Pole	8-Pole
	[lb/ft^2]	[lb/ft^2]	[lb/ft^2]	[lb/ft^2]	[lb/ft^2]	[lb/ft^2]	[lb/ft^2]	[lb/ft^2]
0.5	0.015	0.017	0.017	0.04	0.018	0.17	0.18	0.18
0.75	0.03	0.05	0.04	0.06	0.035	0.21	0.21	0.21
1	0.05	0.05	0.19	0.13	0.15	0.21	0.21	0.55
1.5	0.06	0.07	0.22	0.18	0.21	0.23	0.55	0.62
2	0.08	0.1	0.52	0.37	0.21	0.25	0.6	0.76
3	0.1	0.47	0.65	0.51	0.23	0.62	0.76	0.91
5	0.16	0.57	0.76	1.3	0.25	0.7	0.91	1.8
7.5	0.41	0.68	2.3	1.6	0.62	0.84	1.8	2.1
10	0.46	2.2	2.8	2.6	0.7	0.99	2.1	3.6
15	0.93	2.2	3.9	3.8	0.84	1.9	3.6	4.4
20	1.2	3	4.5	5	0.99	2.3	4.4	7.3
25	2	4	11	6.4	1.9	3.6	7.3	9
30	2.3	4.5	12.5	11	2.3	4.4	9	17
40	3.3	9	20	14	3.6	6.3	13	20
50	4.2	10	23.5	24	4.4	7.6	15	22
60	4.9	14.5	35	28	6.3	11	24	25
75	6.1	17	40.5	39	7.6	13	27	28
100	12	27	61.5	51	11	16	45	47
125	20	33	57.5	62	13	20	56	59
150	24	44.5	85	68	16	33	56	68
200	31	56	111	85	20	39	68	85
250	40	74.5	136	82	33	43	85	106
300	40	86	136	86	39	54	98	129
350	44.5	95		92	43	60	112	158
400	56	109		101	54	82	130	181
500	74.5	114		101	60	122	149	200

Table 134 - Rotor Line Inertia—IEC Ratings

Rated kW	2-Pole	4-Pole	6-Pole	8-Pole
	[kg/m^2]	[kg/m^2]	[kg/m^2]	[kg/m^2]
0.37	0.00035	0.0008	0.0015	0.0025
0.55	0.00045	0.0015	0.0018	0.0035
0.75	0.00085	0.0018	0.0028	0.0053
1.1	0.0011	0.0028	0.0035	0.007
1.5	0.0015	0.0035	0.0063	0.013
2.2	0.002	0.0048	0.011	0.025
3	0.0038	0.0058	0.02	0.033
4	0.0055	0.011	0.028	0.05
5.5	0.014	0.023	0.035	0.065
7.5	0.019	0.028	0.055	0.088
11	0.033	0.05	0.08	0.21
15	0.04	0.07	0.2	0.37
18.5	0.05	0.13	0.29	0.58
22	0.077	0.15	0.33	0.66
30	0.14	0.24	0.57	1.1
37	0.16	0.44	0.89	1.4
45	0.24	0.52	1.3	1.6
55	0.45	0.79	1.5	2.3
75	0.79	1.4	2.4	3
90	0.92	1.6	2.9	3.6
110	1.3	2.2	3.5	4.4
132	1.5	2.7	4.3	6.2
150	1.65	3.09	5.2	6.4
160	1.8	3.2	6	7.5
200	2.3	4.2	7.5	9.3
225	2.8	5.2	7.9	13.9
250	3.3	6	9.1	16
280	3.9	6.8	12.4	20
315	4	7.4	17	24
355	6.2	12	24	30
373	7.5	12.44	30	36

For motor type selection, entering in the data points of a speed torque curve on the custom motor is more accurate than taking the normal curve of a NEMA or IEC standard provided by the tool. While standards have a criteria to meet for the motors, there is still a window of variance. Motors vary in the speed torque curve even within the same type. The wizard uses the average range. Table 135, reproduced from NEMA publication NEMA MG 10-2013, shows the variance within the chart.

Table 135 - Typical Characteristics and Applications of Fixed Frequency Medium AC Squirrel-cage Induction Motors

Polyphase Characteristics(1)	Torque [% Rated Load Torque]			Locked Rotor Current [% Rated Load Current]	Slip	Typical Applications	Relative Efficiency
	Locked Rotor Torque	Pull-up Torque	Breakdown Torque				
Design A • Normal locked rotor torque and high locked rotor current	70...275(2)	65...190(2)	175...300(2)	Not Defined	0.5...5 %	Fans, blowers, centrifugal pumps and compressors, motor-generator sets, etc., where starting torque requirements are relatively low.	Medium or high
Design B • Normal locked rotor torque and normal locked rotor current	70...275(2)	65...190(2)	175...300(2)	600...800	0.5...5 %	Fans, blowers, centrifugal pumps and compressors, motor-generator sets, etc., where starting torque requirements are relatively low.	Medium or high
Design C • High locked rotor torque and high locked rotor current	200...285(2)	140...195(2)	190...225(2)	600...800	1...5 %	Conveyors, crushers, stirring machines, agitators, reciprocating pumps and compressors, etc., where starting under load is required.	Medium
Design D • High locked rotor torque and high slip	275	Not Defined	275	600...800	≥5 %	High peak loads with or without flywheels such as punch presses, shears, elevators, extractors, winches, hoists, oil-well pumping and wire-drawing machines.	Medium
IEC Design H • High locked rotor torque and high locked rotor current	200...285(2)	140...195(2)	190...225(2)	800...1000	1...5 %	Conveyors, crushers, stirring machines, agitators, reciprocating pumps and compressors, etc., where starting under load is required.	Medium
IEC Design N • Normal locked rotor torque and high locked rotor current	75...190(2)	60...140(2)	160...200(2)	800...1000	0.5...3 %	Fans, blowers, centrifugal pumps and compressors, motor-generator sets, etc., where starting torque requirements are relatively low.	Medium or high

(1) These characteristics represent common usage of the motors—for further details, consult the specific performance standards for the complete requirements.
(2) Higher values are for motors having lower horsepower ratings.

Figure 79 shows an example of a customer-supplied speed torque curve and the entries into the custom motor data.

Figure 79 - Custom Motor Speed vs. Torque Curve

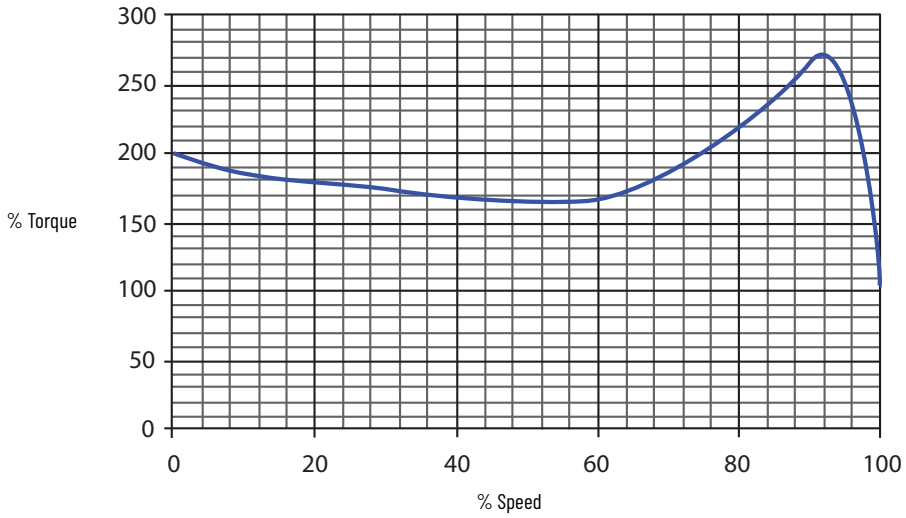

The customer-supplied curve provides a much more accurate method of using the estimation wizard than that of NEMA design average.

A customer calls in and wants to know if they can use an SMC-50 with their motor to start a load in approximately 60 s. You are able to find out the following information:

The load is a flywheel for a large mill. The motor is 300 Hp NEMA Type B motor with a rated speed of 1785 rpm (information from the motor nameplate). The load speed is about 1200 rpm according to the customer. The load inertia was provided by the machine OEM as approximately 10,000 lb•ft^2. There is a 50% load factor (which means the motor is twice the size needed for the actual load). The customer does not know the system inefficiency. They would like to use an SMC-50 with a current limit start. Motor is a 3 lead motor type with a 345 A

FLA. Running time is 30 minutes and off time is 10 minutes. Ambient temperature can get up to 95 °F (35 °C) during the summer. Motor inertia is 100 lb•ft^2 according to the motor specification sheet.

With this scenario, and using the custom motor speed torque from Figure 79, the results look like this.

Custom Motor Type

% Speed	% Torque
0	200
10	185
20	180
30	175
40	170
50	168
60	165
70	180
80	215
90	268
92	275
94	280
96	272
98	271
100	100

Results:

Estimated Start Time: 59.794 seconds
Estimated Stop Time: Not Selected
Estimated Percent Thermal Capacity: 81%

User Input:

Motor Type:	Custom
Rated Power:	300 HP
Rated Speed:	1785
Load Type:	High Inertia
Load Inertia:	10000 lb ft^2
Load Speed:	1200
% Load Factor:	50 %
Motor Inertia:	100 lb ft^2
% Inefficiency:	100 %
Product:	SMC 50
Starting Type:	Current Limit
Initial Current %:	400
Initial Torque %:	Not Entered
Braking Type:	Not Entered
Braking Current %:	Not Entered
Unit Rating:	520 (with fan)
Motor FLA:	345 (Line)
Typical Run Time:	30 minutes
Typical Off Time:	10 minutes
Ambient Temperature:	95°F

Results

Start Time:
59.794

Stop Time:
Not Selected

Thermal Results

Using the information entered above, 81% of the thermal capacity for the SMC 50 - 520 would be reached.

Use of this product appears to be within the normal operating limits for this device.

*Motor FLA must fall within specified current range for unit to operate properly. Ensure that decive selected is applicable to HP/kW rating being used.

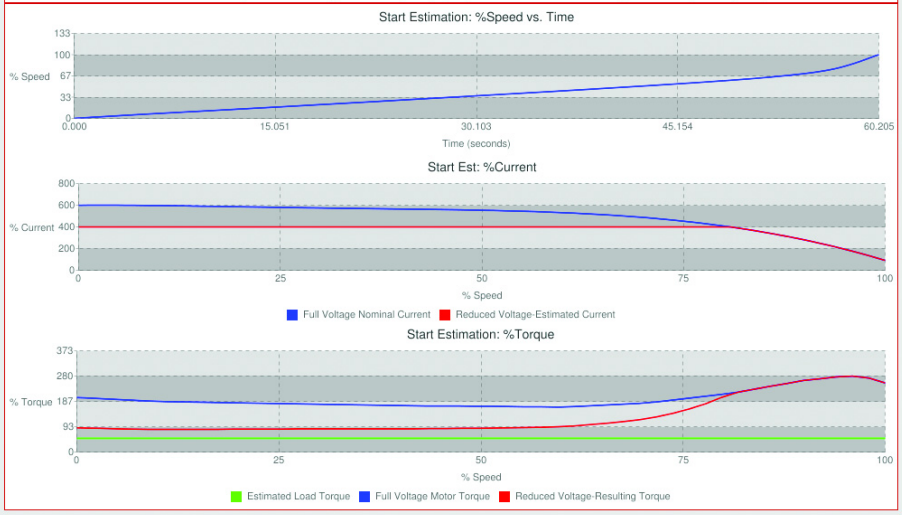

Remember, the tool is an estimate and is not a guarantee.

Table 136 shows the torque capabilities of the SMC-50 controller when it uses reduced voltage or current limit starting. Notice that using an SMC controller at 350% current limit produces approximately the same amount of torque as an electro-mechanical starter. The % applied voltage of the two starting methods is the same.

Table 136 - Motor Torque Capabilities with SMC-50 Controller Options

Starting Type	% Voltage Applied During Start	% Full Load Starting Torque	% Full Load Rated Current
Full Voltage	100	100	600
Wye-Delta	58	33	200
Soft Start with current limit			
150 %	25	6	150
200 %	33	11	200
250 %	42	18	250
300 %	50	25	300
350 %	58	34	350
400 %	67	49	400

Additional Resources

These documents contain additional information concerning related products from Rockwell Automation. You can view or download publications at rok.auto/literature.

Resource	Description
SMC-50 User Manual, publication 150-UM011	Provides complete user information for SMC-50 controllers.
SMC-50 Smart Motor Controller Quick Start, publication 150-QS003	Provides you with the basic information that is required to install, start up, and program your SMC-50 Soft Starter.
SMC Flex User Manual, publication 150-UM008	Provides complete user information for SMC Flex controllers.
SMC-3 Installation Instructions, publication 150-IN044	Provides installation instructions for SMC-3 controllers.
SMC-50 - New Control Advances; Sensorless Linear Acceleration White Paper, publication 150-WP005	Explains the benefits of different start and stop options of the SMC-50 controllers, with an emphasis on sensorless linear acceleration.
Soft Starter Bypass Technology in Smart Motor Controllers, publication 150-WP006	Discusses the differences between the internal and external and options for the bypass contactor in SMC controllers.
When to Use a Soft Starter or AC Variable Frequency Drive White Paper, publication 150-WP007	Shows similarities and differences between the soft starters and variable frequency drives.
SMC-50 Solid-state Smart Motor Controller for Managing Resistive Loads, publication 150-WP008	Explains the benefits of using an SMC-50 controller to manage resistive loads.
Slow Speed Applications Using a Soft Starter, publication 150-WP009	Explains the benefits of using an SMC controller in slow speed applications.
How Do You Control an Electric Motor When the Communication Network Fails?, publication CMPNTS-AT001	Provides an overview about using DeviceLogix technology to program an orderly shutdown.
Using an SMC-50 Solid-State Smart Motor Controller for Pump Protection, publication 150-AT003	Discusses the use of technology in pumping applications to warn of damage or to stop a process from damage.
Wye-delta and Solid-state Starters Application Guide, publication 150-AT005	Explanation and assistance for applying solid-state soft starters in traditional reduced-voltage applications.
DeviceLogix Technology for Industrial Applications, publication 193-AT001	Discusses DeviceLogix technology in control system architecture.
Short-circuit Current Ratings and Your Industrial Control Panel, publication SCCR-AT002	Provides examples for short-circuit current ratings of panels based on the methods stated in UL 508A Supplement B.
Global Short-circuit Rating Tool, rok.auto/sccr	Provides coordinated high-fault branch circuit solutions for motor starters, soft starters, and component drives.
EtherNet/IP Network Devices User Manual, ENET-UM006	Describes how to configure and use EtherNet/IP devices to communicate on the EtherNet/IP network.
Ethernet Reference Manual, ENET-RM002	Describes basic Ethernet concepts, infrastructure components, and infrastructure features.
Industrial Components Preventive Maintenance, Enclosures, and Contact Ratings Specifications, publication IC-TD002	Provides a quick reference tool for Allen-Bradley industrial automation controls and assemblies.
Safety Guidelines for the Application, Installation, and Maintenance of Solid-state Control, publication SGI-1.1	Designed to harmonize with NEMA Standards Publication No. ICS 1.1-1987 and provides general guidelines for the application, installation, and maintenance of solid-state control in the form of individual devices or packaged assemblies incorporating solid-state components.
Industrial Automation Wiring and Grounding Guidelines, publication 1770-4.1	Provides general guidelines for installing a Rockwell Automation industrial system.
Product Selection and Configuration tools, rok.auto/systemtools	Helps configure complete, valid catalog numbers and build complete quotes based on detailed product information.
Rockwell Automation Global SCCR tool, rok.auto/sccr	Provides coordinated high-fault branch circuit solutions for motor starters, soft starters, and component drives.
Product Certifications website, rok.auto/certifications.	Provides declarations of conformity, certificates, and other certification details.

Rockwell Automation Support

Use these resources to access support information.

Technical Support Center	Find help with how-to videos, FAQs, chat, user forums, Knowledgebase, and product notification updates.	rok.auto/support
Local Technical Support Phone Numbers	Locate the telephone number for your country.	rok.auto/phonesupport
Technical Documentation Center	Quickly access and download technical specifications, installation instructions, and user manuals.	rok.auto/techdocs
Literature Library	Find installation instructions, manuals, brochures, and technical data publications.	rok.auto/literature
Product Compatibility and Download Center (PCDC)	Download firmware, associated files (such as AOP, EDS, and DTM), and access product release notes.	rok.auto/pcdc

Documentation Feedback

Your comments help us serve your documentation needs better. If you have any suggestions on how to improve our content, complete the form at rok.auto/docfeedback.

Accu-Stop, Allen-Bradley, AnaCANda, Connected Components Workbench, DeviceLogix, DPI, DriveExplorer, DriveExecutive, DriveObserver, DriveTools, expanding human possibility, FactoryTalk, PowerFlex, ProposalWorks, Rockwell Automation, SCANport, SMB, and SMC are trademarks of Rockwell Automation, Inc.

ControlNet, DeviceNet, and EtherNet/IP are trademarks of ODVA, Inc.

Trademarks not belonging to Rockwell Automation are property of their respective companies.

Rockwell Automation maintains current product environmental compliance information on its website at rok.auto/pec.

Rockwell Automation NV Commercial Registration Number 0424.293.935
Rockwell Otomasyon Ticaret A.Ş. Kar Plaza İş Merkezi E Blok Kat:6 34752, İçerenköy, İstanbul, Tel: +90 (216) 5698400 EEE Yönetmeliğine Uygundur

Connect with us.

rockwellautomation.com — expanding **human possibility**®

AMERICAS: Rockwell Automation, 1201 South Second Street, Milwaukee, WI 53204-2496 USA, Tel: (1) 414.382.2000
EUROPE/MIDDLE EAST/AFRICA: Rockwell Automation NV, Pegasus Park, De Kleetlaan 12a, 1831 Diegem, Belgium, Tel: (32) 2663 0600
ASIA PACIFIC: Rockwell Automation SEA Pte Ltd, 2 Corporation Road, #04-05, Main Lobby, Corporation Place, Singapore 618494, Tel: (65) 6510 6608
UNITED KINGDOM: Rockwell Automation Ltd., Pitfield, Kiln Farm, Milton Keynes, MK11 3DR, United Kingdom, Tel: (44)(1908) 838-800

Publication 150-TD009D-EN-P - April 2025
Supersedes Publication 150-TD009C-EN-P - January 2021

Copyright © 2025 Rockwell Automation, Inc. All rights reserved. Printed in the U.S.A.