





Elevator Panel Solution

Bulletin 150-E

Allen-Bradley
by ROCKWELL AUTOMATION

User Manual

Original Instructions

Allen Bradley 150-E104NCE-FC | gesrepair.com

Important User Information

Read this document and the documents listed in the additional resources section about installation, configuration, and operation of this equipment before you install, configure, operate, or maintain this product. Users are required to familiarize themselves with installation and wiring instructions in addition to requirements of all applicable codes, laws, and standards.

Activities including installation, adjustments, putting into service, use, assembly, disassembly, and maintenance are required to be carried out by suitably trained personnel in accordance with applicable code of practice.

If this equipment is used in a manner not specified by the manufacturer, the protection provided by the equipment may be impaired.

In no event will Rockwell Automation, Inc. be responsible or liable for indirect or consequential damages resulting from the use or application of this equipment.

The examples and diagrams in this manual are included solely for illustrative purposes. Because of the many variables and requirements associated with any particular installation, Rockwell Automation, Inc. cannot assume responsibility or liability for actual use based on the examples and diagrams.

No patent liability is assumed by Rockwell Automation, Inc. with respect to use of information, circuits, equipment, or software described in this manual.

Reproduction of the contents of this manual, in whole or in part, without written permission of Rockwell Automation, Inc., is prohibited.

Throughout this manual, when necessary, we use notes to make you aware of safety considerations.



WARNING: Identifies information about practices or circumstances that can cause an explosion in a hazardous environment, which may lead to personal injury or death, property damage, or economic loss.



ATTENTION: Identifies information about practices or circumstances that can lead to personal injury or death, property damage, or economic loss. Attentions help you identify a hazard, avoid a hazard, and recognize the consequence.

IMPORTANT Identifies information that is critical for successful application and understanding of the product.

These labels may also be on or inside the equipment to provide specific precautions.



SHOCK HAZARD: Labels may be on or inside the equipment, for example, a drive or motor, to alert people that dangerous voltage may be present.



BURN HAZARD: Labels may be on or inside the equipment, for example, a drive or motor, to alert people that surfaces may reach dangerous temperatures.



ARC FLASH HAZARD: Labels may be on or inside the equipment, for example, a motor control center, to alert people to potential Arc Flash. Arc Flash will cause severe injury or death. Wear proper Personal Protective Equipment (PPE). Follow ALL Regulatory requirements for safe work practices and for Personal Protective Equipment (PPE).

The following icon may appear in the text of this document.



Identifies information that is useful and can help to make a process easier to do or easier to understand.

Table of Contents

About This Publication 5
Summary of Changes. 5
Additional Resources 5
European Communities (EC) Directive Compliance 6
EMC Directive 6
Low Voltage Directive 6
UL/CSA Elevator Ratings 6

Chapter 1

Introduction

Component Overview 7
Base Controller 8
Fault Contactor. 8
Function Overview 8
Starter Selection 9
For 6- or 12-Lead Wye-Delta Wound Motors 9
For 3- or 9-Lead Closed Delta-Type Motors 9

Chapter 2

Installation and Wiring

Unpacking 10
Mounting 10
Dimensions 10
Installation Precautions 12
Motor Branch Protection and Disconnecting Means 12
Electrical Noise Suppression. 12
Power Factor Correction Capacitors (PFCCs) 12
Terminal Torque Specifications 12
Connection Diagrams 14
Typical Control Wiring 18

Chapter 3

Programming

DIP Switch Settings 20
Motor FLA Requirements 21
Motor Overload Trip Curves 22
Input and Output Timing 22

Chapter 4

Troubleshooting

Introduction. 23
Diagnostics Indication 23
Troubleshooting Steps. 24
Renewal Parts 25

Chapter 5

Specifications

Electrical 26
Mechanical 27
Environmental 28
Approximate Dimensions and Shipping Weights 28

Appendix A

History of Changes

Approximate Dimensions and Shipping Weights 29

About This Publication

This publication provides detailed instructions that you need to select, install, program, and troubleshoot Bulletin 150-E Elevator Controller Panels.

Summary of Changes

This publication contains the following new or updated information. This list includes substantive updates only and is not intended to reflect all changes. This document has also been reformatted.

Topic	Page
Added Additional Resources section	5
Added European Communities (EC) Directive Compliance	6
Update for series change; fault contactors for Series C updated to Bulletin 100-E contactor options, replacing Bulletins 100-C and 100-D devices	8,25

Additional Resources

These documents contain additional information concerning related products from Rockwell Automation.

Resource	Description
SMC-3, SMC Flex, and SMC-50 Smart Motor Controllers Technical Data, publication 150-TD009	Provides specifications and application profiles for the SMC™ Smart Motor Controller product line.
IEC Contactor Specifications, publication 100-TD013	Provides specifications for IEC contactors.
Industrial Components Preventive Maintenance, Enclosures, and Contact Ratings Specifications, publication IC-TD002	Provides a quick reference tool for Allen-Bradley industrial automation controls and assemblies.
Safety Guidelines for the Application, Installation, and Maintenance of Solid-state Control, publication SGI-1.1	Designed to harmonize with NEMA Standards Publication No. ICS 1.1-1987 and provides general guidelines for the application, installation, and maintenance of solid-state control in the form of individual devices or packaged assemblies incorporating solid-state components.
Industrial Automation Wiring and Grounding Guidelines, publication 1770-4.1	Provides general guidelines for installing a Rockwell Automation industrial system.
Product Certifications website, rok.auto/certifications.	Provides declarations of conformity, certificates, and other certification details.

You can view or download publications at rok.auto/literature.

European Communities (EC) Directive Compliance

If this product has the CE mark, then it is approved for installation within the European Union. It has been designed and tested to meet the following directives.

EMC Directive

This product is tested to meet the Council Directive 2014/30/EU Electromagnetic Compatibility (EMC) by applying the following standards, in whole or in part, documented in a technical construction file:

EN 60947-4-2 — Product Standard

This product is intended for use in an industrial environment.

Low Voltage Directive

This product is tested to meet Council Directive 2014/35/EU Low Voltage. This equipment is classified as open equipment and must be mounted in an enclosure during operation to provide safety protection.

UL/CSA Elevator Ratings

Bulletin 150-C Soft Starters are cULus Listed (Canadian Standards per UL 508 and CSA C22.2 No. 14) as solid-state motor controllers in File E96956. They are also cULus Listed (CAN/CSA B44.1-96) as elevator controllers in UL File E96956.

Introduction

This manual provides and overview of the installation, set-up, and typical operation of the Allen-Bradley® hydraulic elevator and escalator starter. This solid- state starter solution is designed to operate 3-phase standard squirrel cage induction motors and can be connected to a 6- or 12-lead Wye-Delta or standard 3- or 9-lead motors. Through the use of line or inside-the-delta control, the solid-state solution can provide ultimate control of the motor. The advantages of a solid-state solution include the following:

- Provides smooth motor starting.
- Reduces current surges on weak electrical systems.
- Reduces starting torque of the motor, which helps to reduce mechanical stress on system components.
- Helps meet both local and regional electrical codes when reduced voltage starting is a requirement.
- Eliminates voltage and current spikes associated with traditional Wye-Delta starters.
- Maximizes the life of the motor with reduced electrical strain.
- Reduces general system maintenance requirements for improved uptime.

Component Overview

The starter is made up of two components, the base controller and a fault contactor.

Figure 1 - Bulletin 150-E Components

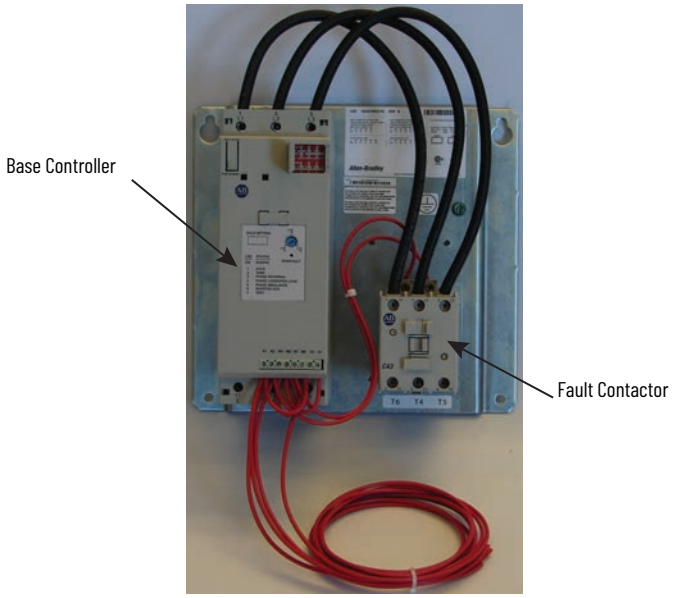

Base Controller

The base controller is a standard product that uses intelligent features to provide advanced motor control and simple diagnostics. The base controller consists of the elements necessary to control the motor. These elements include:

- a main micro-processor
- current sensing
- built-in adjustable overload
- solid-state power modules, and
- electro-mechanical bypass contacts.

Through the use of simple DIP switch configuration, you can configure the controller for a variety of modes. The default configuration uses the built-in current sensing to limit current to the motor during startup. Once up to speed, the base controller transitions to the run mode by transitioning to internal bypass contactors and changing the state of the auxiliary contact. The internal bypass contactor provides decreased heating during run and removes the SCRs from the circuit.

Fault Contactor

The fault contactor is controlled through the fault contact of the controller. When control power is applied to the controller, the normally open fault contact closes and applies control power to the coil of the contactor. The fault contact opens, removing power from the fault contactor, and thus disabling the motor during any one of the following events:

- The power is removed from the controller.
- The motor has developed a problem including overloading due to one of the following:
  - Mechanical or electrical reasons
  - Ground faults or
  - Motor short circuits.
- The starter has detected an internal problem such as a shorted SCR or overtemperature condition.



150-E Series B devices use Bulletin 100-C or 100-D contactors. Series C devices use Bulletin 100-E contactors. See Table 20 for more information.

Function Overview

The Bulletin 150-E elevator panel provides solution to both advanced motor control and simple diagnostics. Table 1 and Table 2 provide a brief overview of the basic product features.

Table 1 - Motor Control Features

Function	Description
Current Limit	Using internal current sensors, the SMC™ controller regulates the current level that is applied to the motor over the programmed period of time. This type of motor control produces a slow start and ensures that the current does not exceed the programmed level. This is the standard configuration of the device and aligns well with traditional applications.
Soft Start	The voltage is ramped from an initial set point to full voltage over the programmed period of time. This type of motor control produces a smooth start in less time than the current limit setting. However, it does not restrict the current.
Soft Stop	The voltage is ramped down from full voltage and applied to the motor over a programmed period of time. The result is a smooth stop.

Table 2 - Diagnostic Features

Function	Description
Overload	Provides protection of the motor for over current conditions. This feature offers a user-selectable setting called the trip class, which can be used to accommodate different applications and motor types. When the motor draws more than the nominal value of current for a period of time, the device faults on a motor overload fault.
Overtemperature	A built-in self-monitoring method for detecting a SCR overtemperature condition. If the internal temperature exceeds a design threshold, the device faults on a SCR Overtemp fault.
Phase Reversal	You can select the phase relationship of the incoming power. If this phase relationship changes, the device faults, indicating a problem.
Phase Loss/ Open Load	When any one of the incoming 3 phases are lost, the controller faults, indicating a phase loss condition has occurred.
Phase Imbalance	When enabled, detects whether a phase imbalance condition exists and fault the unit. A phase imbalance is defined as a 65% differential between the highest and lowest phase for more than 3 seconds.
Shorted SCR	Each time the SMC controller initiates a start, it checks to see if the SCRs are operating correctly. If the controller is unable to properly turn on and off any one of the SCRs, the device faults on a Shorted SCR fault.

Starter Selection

For 6- or 12-Lead Wye-Delta Wound Motors

The following table lists the catalog numbers that can be used with 6 or 12 lead Wye-Delta motors. For proper operation, the connection should be verified during installation. Chapter 2 includes sample connection diagrams for inside-the-delta connected motors.

Table 3 - Cat. Nos. For Use with 6- or 12-Lead Wye-Delta Motors

Hp at Nominal Ratings				Overload Range(1)	Control Voltage Cat. Nos.	
200V	240V	480V	575V		120V	230V
10	10	20	30	10.9...32.9	150-E32NCE-FC	150-E32NCA-FC
15	15	30	40	17...51	150-E51NCE-FC	150-E51NCA-FC
20	20	40	60	21.3...64	150-E64NCE-FC	150-E64NCA-FC
20	25	50	60	24.7...74	150-E74NCE-FC	150-E74NCA-FC
30	40	75	100	34.7...104	150-E104NCE-FC	150-E104NCA-FC
40	50	100	150	49...147	150-E147NCE-FC	150-E147NCA-FC
75	75	150	200	59...234	150-E234NCE-FC	150-E234NCA-FC

(1) Motor FLA must fall within the specified range to operate correctly.

For 3- or 9-Lead Closed Delta-Type Motors

The following table lists the catalog numbers that can be used with 3- or 9-lead closed delta type motors. For proper operation, the connection should be verified during installation. Chapter 2 includes sample connection diagrams for line-connected motors.

Table 4 - Cat. Nos. For Use with 6 or 12 Lead Closed Delta-Type Motors

Hp at Nominal Ratings				Overload Range(1)	Control Voltage Cat. Nos.	
200V	240V	480V	575V		120V	230V
5	5	10	15	6.3...19	150-E32NCE-FC	150-E32NCA-FC
7.5	10	20	25	10...30	150-E51NCE-FC	150-E51NCA-FC
10	10	25	30	12.3...37	150-E64NCE-FC	150-E64NCA-FC
10	15	30	40	14.3...43	150-E74NCE-FC	150-E74NCA-FC
15	20	40	50	20...60	150-E104NCE-FC	150-E104NCA-FC
25	30	60	75	28.3...85	150-E147NCE-FC	150-E147NCA-FC
40	50	100	125	34...135	150-E234NCE-FC	150-E234NCA-FC

(1) Motor FLA must fall within the specified range to operate correctly.

Installation and Wiring

Unpacking

Before installation, unpack the starter panel from its packaging and perform a complete visual inspection of the panel. Inspect all components for damage related to shipping and handling, including the controller, wiring, and fault contactor. Claims for damage must be made to the carrier as soon as possible after receipt of the shipment.

Mounting

The small footprint of the starter panel makes it ideal for mounting in the same space previously occupied by legacy solid-state starters and traditional full-voltage starters. The starter panel does not have mounting requirements beyond the basic footprint of the panel.

The product can incorporate a small cooling fan. There are no additional cooling requirements for the product. However, it is good practice to leave at least 6 inches (15.24 cm) of free space above and below the unit for ideal air flow.

Dimensions

Figure 2 - Panel Dimensions for 32, 51, and 64 A Elevator Panels

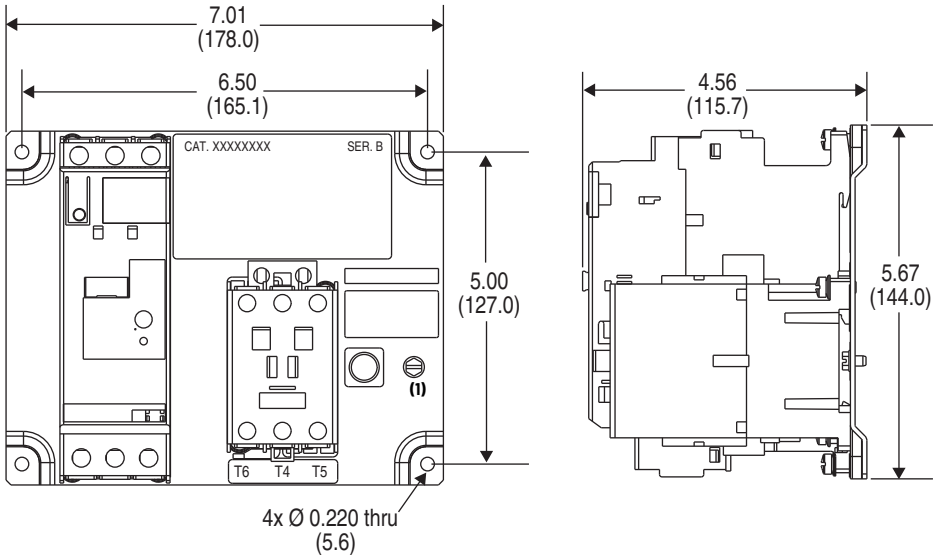

Note	Information
1	This screw is intended to secure a prepared bonding conductor (example: a bonding conductor with a crimped-on lug) or a suitable terminal for connection of an unprepared bonding conductor (example: a bonding conductor with a stripped wire end). This screw is not intended for a direct field wiring connection of an unprepared bonding conductor or equipment grounding conductor.

Figure 3 - Panel Dimensions for 74, 104, and 147 A Elevator Panels

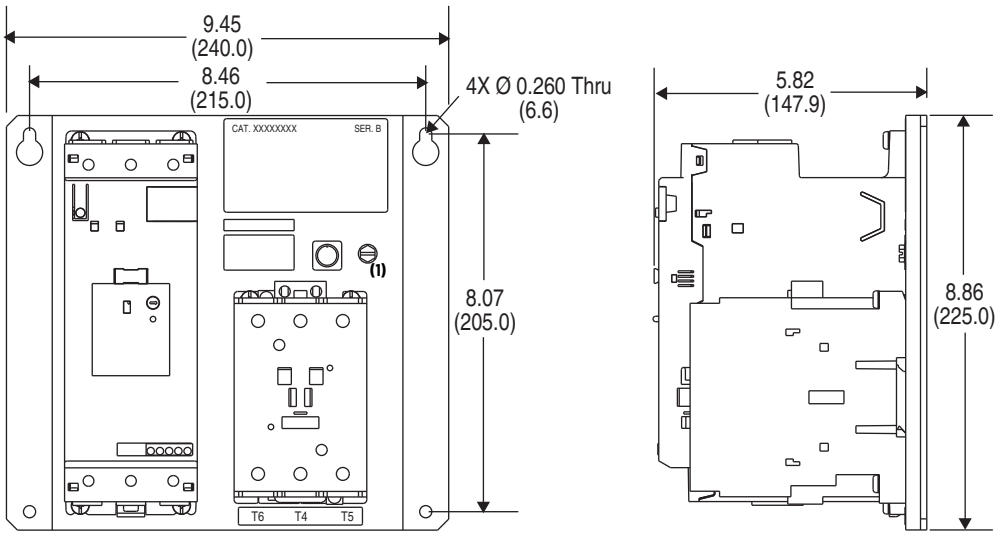

Note	Information
1	This screw is intended to secure a prepared bonding conductor (example: a bonding conductor with a crimped-on lug) or a suitable terminal for connection of an unprepared bonding conductor (example: a bonding conductor with a stripped wire end). This screw is not intended for a direct field wiring connection of an unprepared bonding conductor or equipment grounding conductor.

Figure 4 - Panel Dimensions for 234 A Elevator Panels

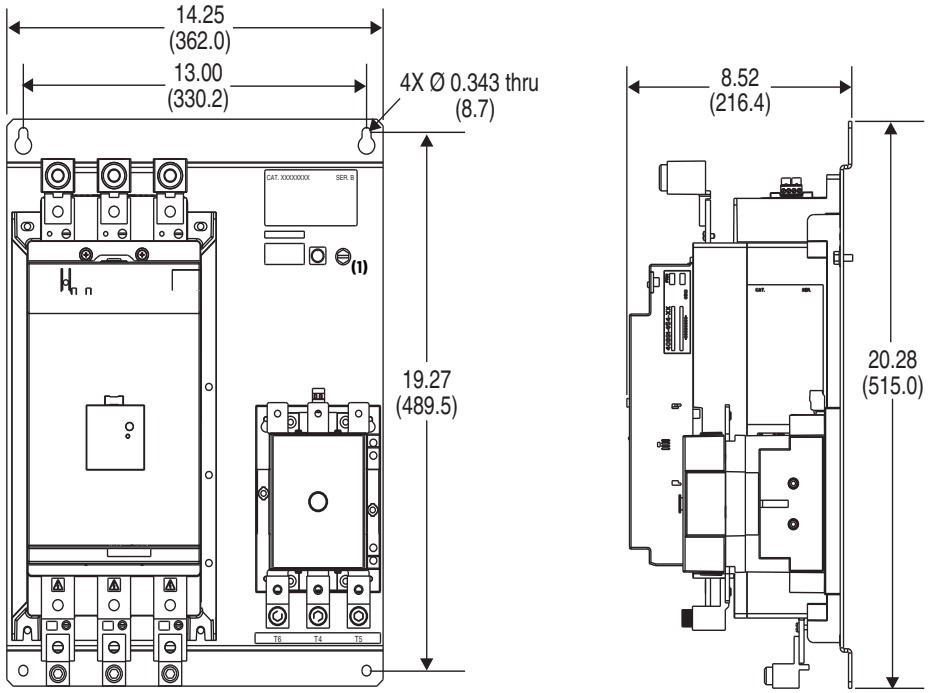

Note	Information
1	This screw is intended to secure a prepared bonding conductor (example: a bonding conductor with a crimped-on lug) or a suitable terminal for connection of an unprepared bonding conductor (example: a bonding conductor with a stripped wire end). This screw is not intended for a direct field wiring connection of an unprepared bonding conductor or equipment grounding conductor.

Installation Precautions

The following precautions are provided as guidance for proper installation of this controller. Because this product was designed to be used in a variety of applications, not all precautions mentioned are relevant to your particular application. In all cases, the local codes and standards governing this type of product must be observed.

Motor Branch Protection and Disconnecting Means

- The controller features motor overload protection. However, it does not have means to protect itself from a short circuit condition. Suitable branch circuit protection and coordination must be provided per the NEC, or the equivalent local electrical code.

Electrical Noise Suppression

- Electrical noise can be generated from various sources connected to the same power as the controller. Sources of noise include: inductive loads (example: relays and solenoids), large motors, and machinery, variable-frequency drives, and other high-frequency devices (example: welders).
- Electrical noise can enter the product through power and control wiring and cause damage to solid-state components.
- You can mitigate electrical noise using the following methods:
  - Proper wiring practices, including grounding, use of shielded cable where appropriate, and separation of power, control, and signaling wires.
  - Use surge suppression devices on inductive loads.
  - Use isolation transformers for high-frequency generators.

Power Factor Correction Capacitors (PFCCs)

- PFCCs must always be used on the line side of the controller. Use of PFCCs on the output side of the controller damages the starter.

Terminal Torque Specifications

Table 5 - Torque Specifications

Controller Size [A]	Attribute	Power Terminals		
		Line	Load	Control
32/51/64 Cat. No. 150-E40KD00	Wire size	14...4 AWG 2.5...25 mm^2	14...6 AWG 2.5...16 mm^2	24...14 AWG 0.2...2.5 mm^2
	Torque	20...25 lb•in 2.3...2.8 N•m	20...22.5 lb•in 2.3...2.6 N•m	4.4...8 lb•in 0.5...0.9 N•m
74/104/147 Cat. No. 150-E65KD00	Wire size	14...3/0 AWG 2.5...95 mm^2	14...1 AWG 2.5...50 mm^2	24...14 AWG 0.2...2.5 mm^2
	Torque	100...110 lb•in 11.3...12.4 N•m	100...110 lb•in 11.3...12.4 N•m	4.4...8 lb•in 0.5...0.9 N•m
234 Cat. No. 150-E190KD00	Wire size	6...250 MCM 16...120 mm^2	6...250 MCM 16...120 mm^2	24...14 AWG 0.2...2.5 mm^2
	Torque	275 lb•in 31 N•m	275 lb•in 31 N•m	4.4...8 lb•in 0.5...0.9 N•m

Table 6 - Fault Contactor Torque

Controller Size [A]	Attribute	Power Terminals		
		Line	Load	Control
32/51/64 Cat. No. 150-E40KD00	Wire size	10…2 AWG 6…35 mm^2	10…2 AWG 6…35 mm^2	18…14 AWG 1…2.5 mm^2
	Torque	35 lb•in 4 N•m	35 lb•in 4 N•m	11 lb•in 1.2 N•m
74/104 Cat. No. 150-E65KD00	Wire size	10…2 AWG 6…35 mm^2	10…2 AWG 6…35 mm^2	18…14 AWG 1…2.5 mm^2
	Torque	35 lb•in 4 N•m	35 lb•in 4 N•m	11 lb•in 1.2 N•m
147 Cat. No. 150-E80KD00	Wire size	6…1 AWG 6…70 mm^2	6…1 AWG 6…70 mm^2	18…14 AWG 1…2.5 mm^2
	Torque	53 lb•in 6 N•m	53 lb•in 6 N•m	11 lb•in 1.2 N•m
234 Cat. No. 150-E190KD00	Wire size	6…300 MCM 10…150 mm^2	6…300 MCM 10…150 mm^2	18…14 AWG 1…4 mm^2
	Torque	300 lb•in 34 N•m	300 lb•in 34 N•m	8.9…10.6 lb•in 1…1.2 N•m

Connection Diagrams

Figure 5 - Diagram and Power Connections; Motor Wiring—6-lead Delta-connected Motors

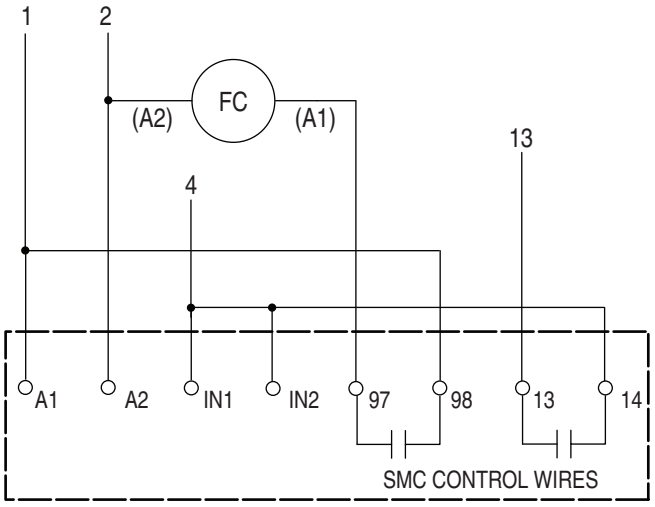

1 — Contol Power (L1)
2 — Contol Common (L2)
4 — Start Enable
13 — Up-To-Speed Indication

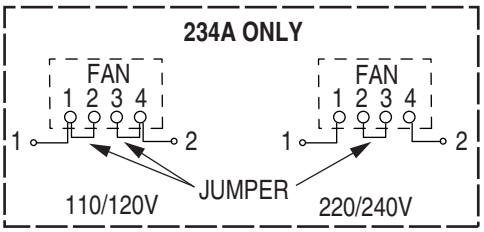

Incoming Line Connections

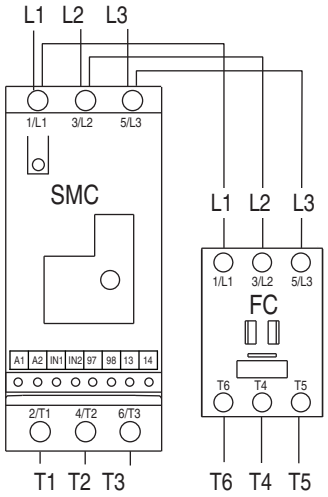

Incoming Lines

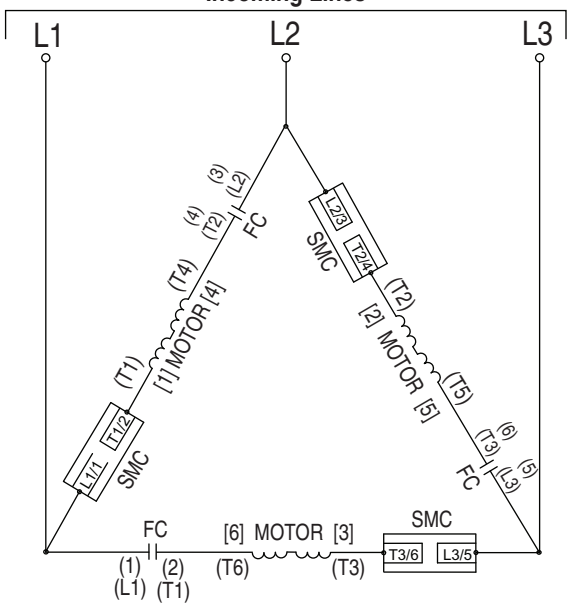

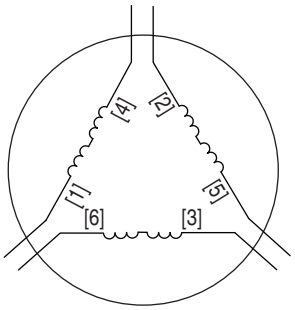

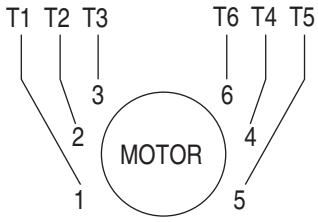

6 LEAD MOTOR CONNECTIONS							
STARTER TERMINALS	T1	T2	T3	T6	T4	T5	JUMPER
MOTOR TERMINALS	1	2	3	6	4	5	N/A

Figure 6 - Motor Wiring—12-lead Delta-connected Motors

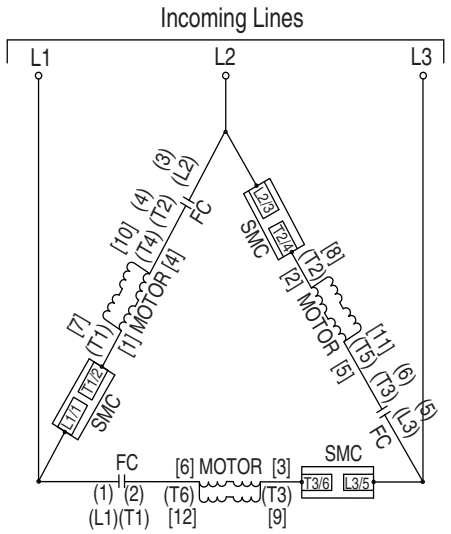

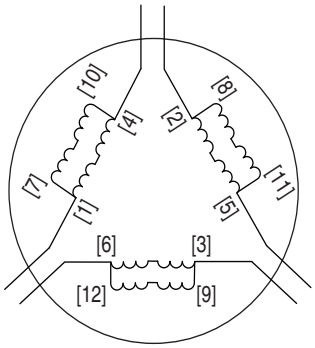

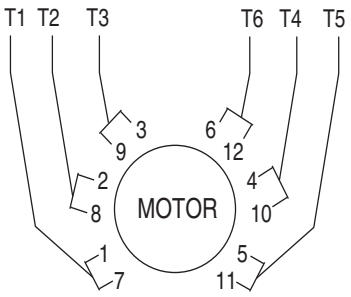

12 LEAD 230V LOW VOLTAGE MOTOR CONNECTIONS							
STARTER TERMINALS	T1	T2	T3	T6	T4	T5	JUMPER
MOTOR TERMINALS	1&7	2&8	3&9	6&12	4&10	5&11	N/A

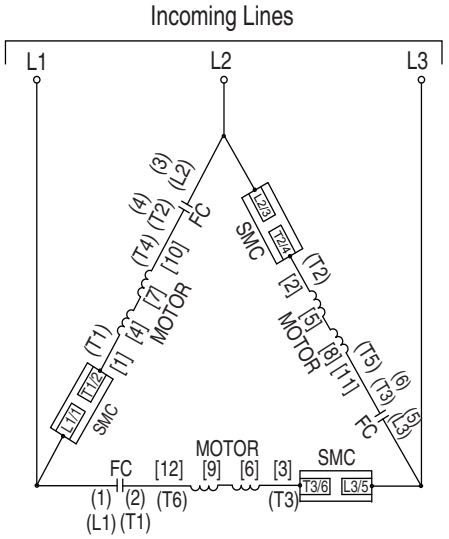

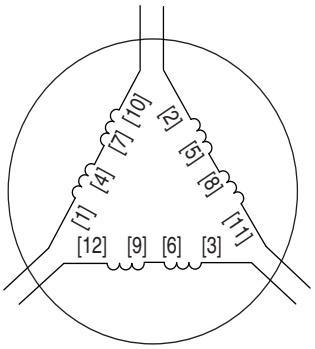

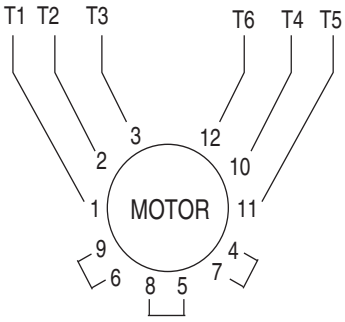

12 LEAD 460V HIGH VOLTAGE MOTOR CONNECTIONS							
STARTER TERMINALS	T1	T2	T3	T6	T4	T5	JUMPER
MOTOR TERMINALS	1	2	3	12	10	11	4&7 5&8 6&9

Figure 7 - Diagram and Power Connections; Motor Wiring—3-lead Line-connected Motors

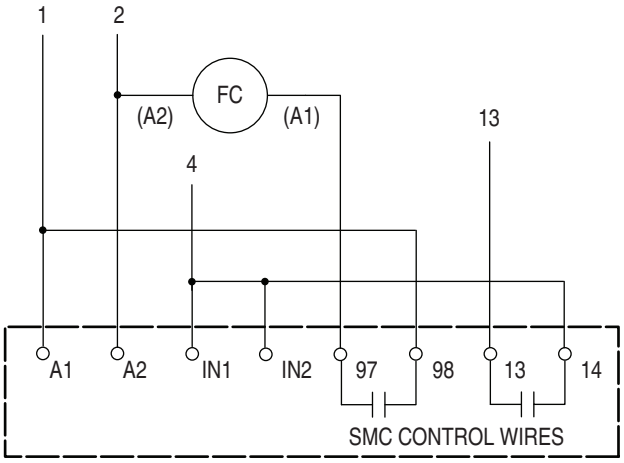

1 — Contol Power (L1)
2 — Contol Common (L2)
4 — Start Enable
13 — Up-To-Speed Indication

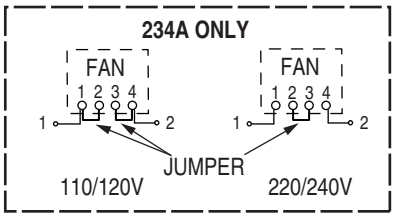

Incoming Line Connections

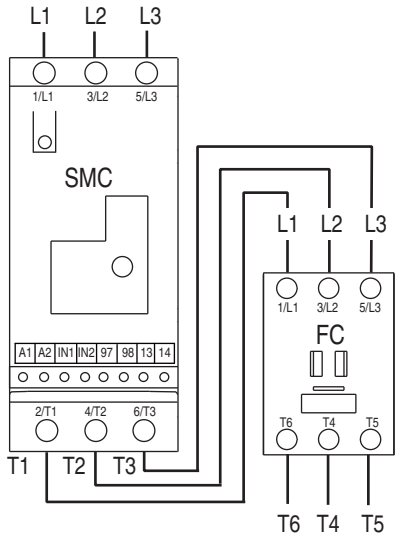

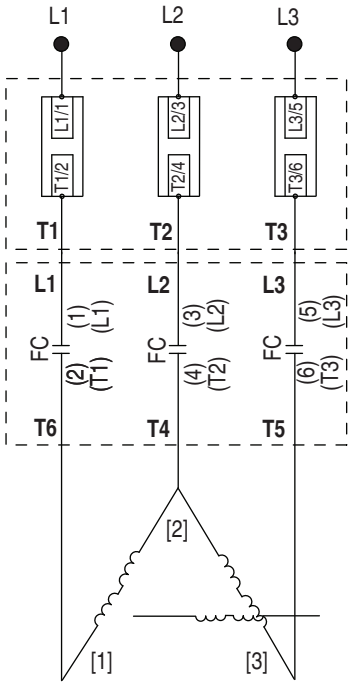

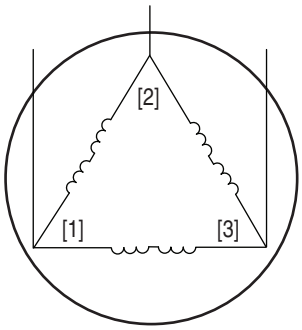

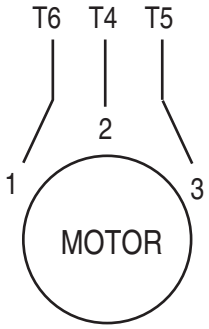

3 LEAD MOTOR CONNECTIONS				
STARTER TERMINALS	T6	T4	T5	JUMPER
MOTOR TERMINALS	1	2	3	N/A

Figure 8 - Motor Wiring—9-lead Line-connected Motors

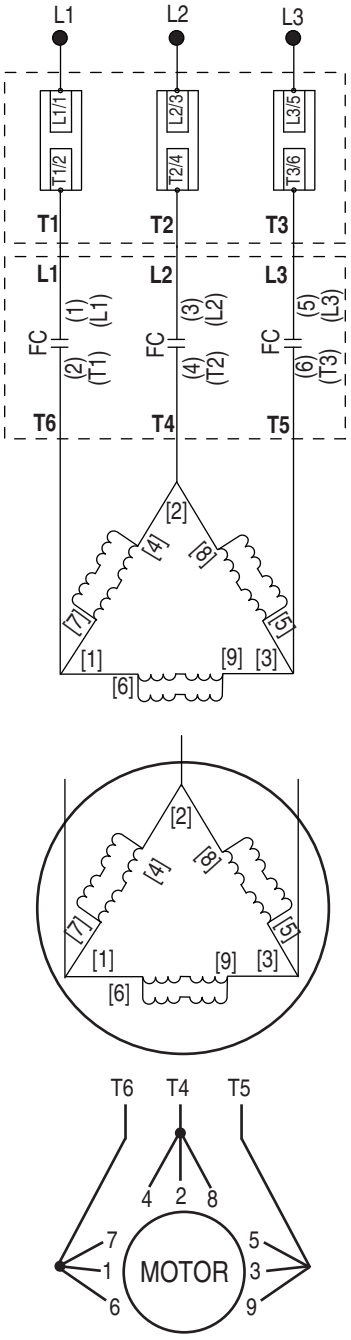

9 LEAD 230V LOW VOLTAGE MOTOR CONNECTIONS				
STARTER TERMINALS	T6	T4	T5	JUMPER
MOTOR TERMINALS	1, 6, 7	2, 4, 8	3, 5, 9	N/A

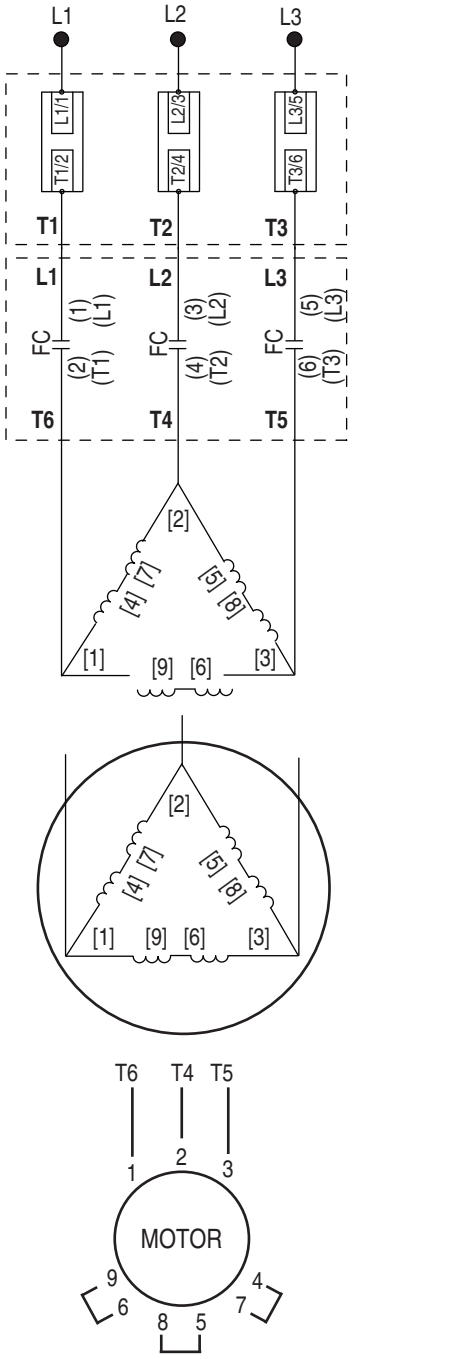

9 LEAD 460V HIGH VOLTAGE MOTOR CONNECTIONS				
STARTER TERMINALS	T6	T4	T5	JUMPER
MOTOR TERMINALS	1	2	3	4&7 5&8 6&9

Typical Control Wiring

Figure 9 - Control Wiring for Delta-connected Controllers

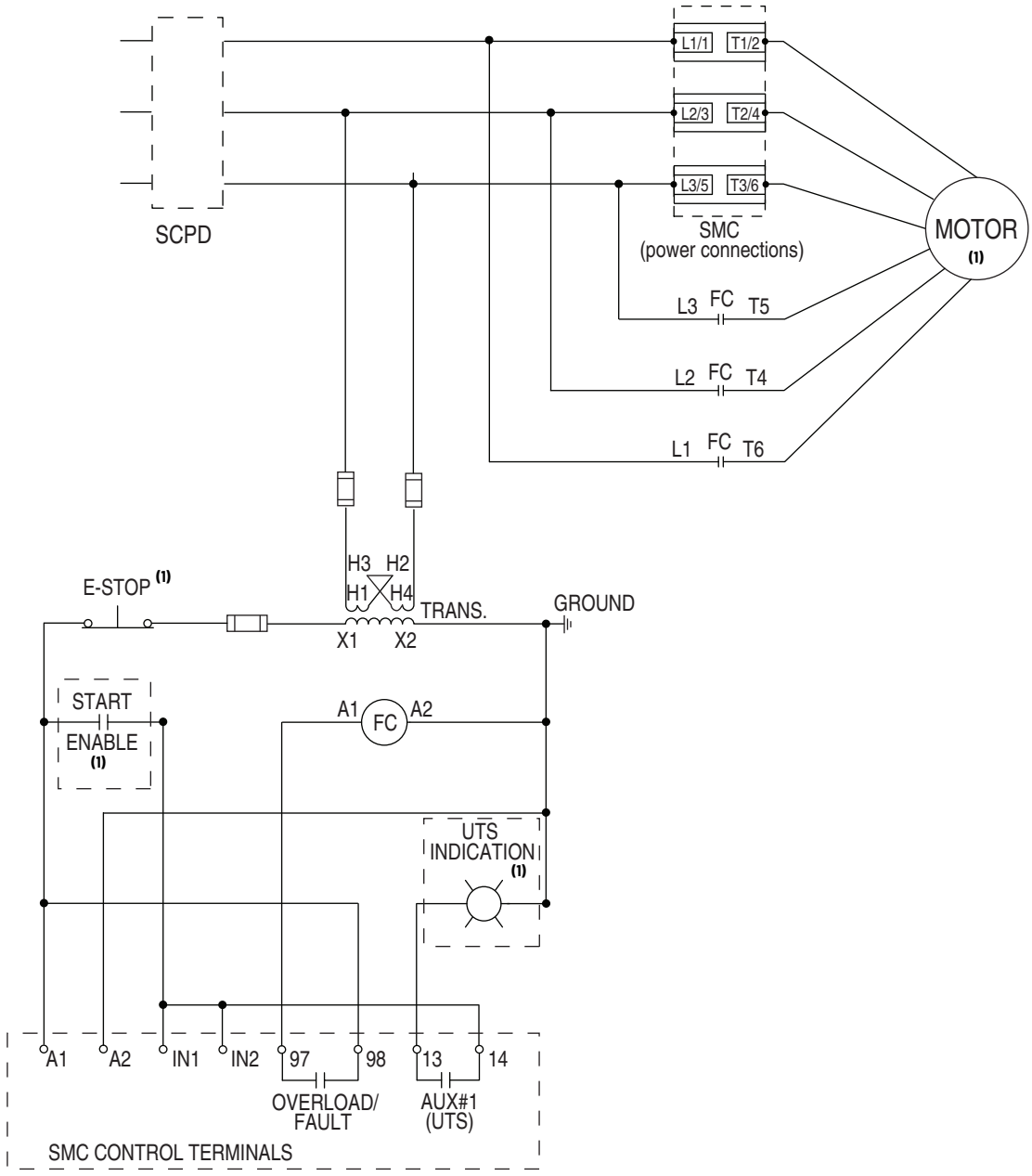

Note	Information
1	Customer supplied

Figure 10 - Control Wiring for Line-connected Motors

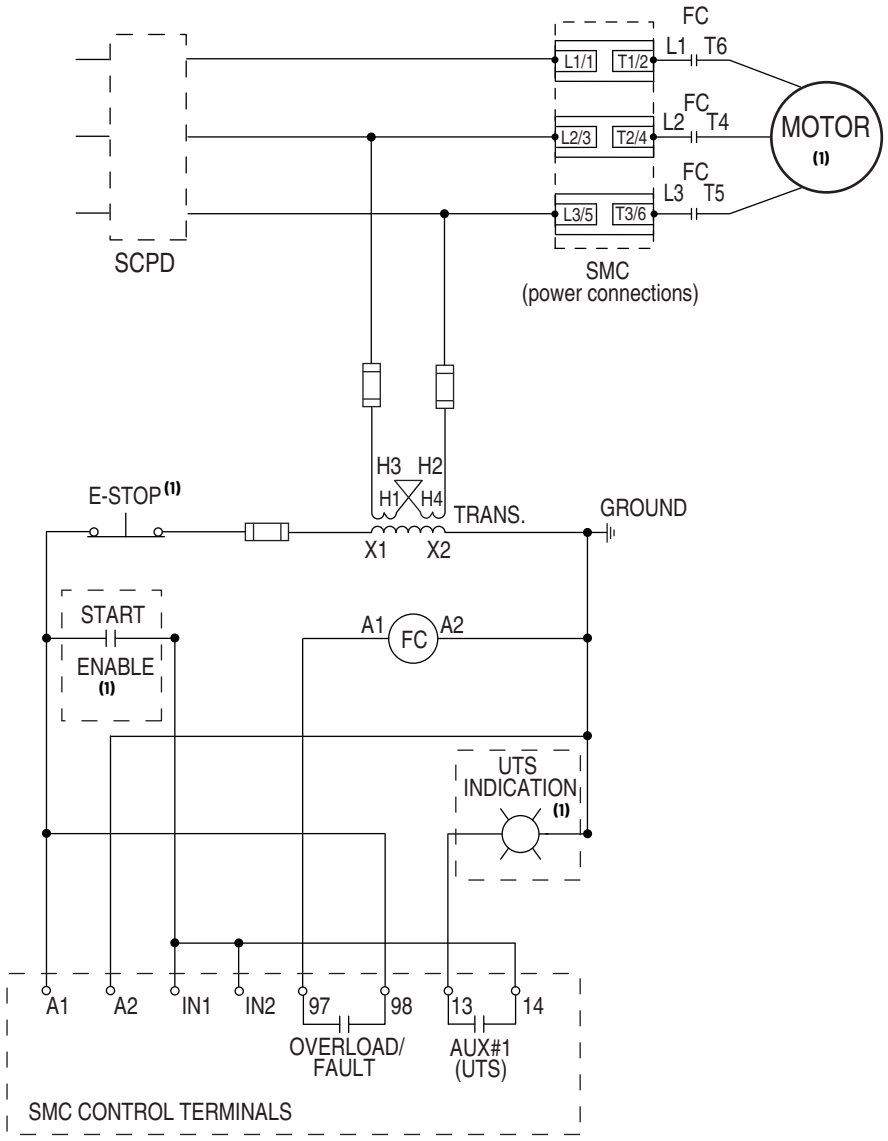

Note	Information
1	Customer supplied

Programming

DIP Switch Settings

Program the 150-E elevator controller with the DIP switches that are located on the front of the controller. The DIP switch settings define all functionality. The following tables define the settings available within the SMC™ controller. The default settings are shaded.

Table 7 - Start Time

Setting [seconds]	Switch #1	Switch #2	Description
2	OFF	OFF	This defines the time for which the controller ramps or limits current to the motor. The controller can determine when the motor is up-to-speed (UTS), it may transition to bypass before this time expires. If the motor does not reach speed before the time expires, the controller continues under SCR control and does not close the bypass contactor.
5	ON	OFF	
10	OFF	ON	
15	ON	ON	

Table 8 - Start Mode

Mode Setting	Switch #3	Description
Current Limit	OFF	In Current Limit mode, a set level of current is applied to the motor over the start time. In Soft Start mode, the device ramps the torque from the initial level to 100% over the start time.
Soft Start	ON	

Table 9 - Current Limit/Initial Torque Level

% FLA/ % Torque	Switch #4	Switch #5	Description
150%/15%	OFF	OFF	The level indicated by this programming applies an initial level of current or torque to the motor for the start time. For example, if switch #3 is set to OFF, the device performs a current limit start at the level indicated by these switches.
250%/25%	ON	OFF	
350%/35%	OFF	ON	
450%/65%	ON	ON	

Table 10 - Soft Stop Time

Settings [seconds]	Switch #6	Switch #7	Description
OFF	OFF	OFF	Soft Stop reduces the voltage that is applied to the motor over the programmed period of time. The soft stop is complete when the soft stop timer has expired or the current measured drops below 50% of the FLA setting.
1 x start time	ON	OFF	
2 x start time	OFF	ON	
3 x start time	ON	ON	

Table 11 - Phase Rotation

Setting	Switch #9	Description
ABC rotation	OFF	This switch defines the allowable phase rotation of the motor.
CBA rotation	ON	

Table 12 - Phase Imbalance

Setting	Switch #10	Description
Enabled	OFF	The controller can monitor for imbalance between phase currents. You can disable this protection feature.
Disabled	ON	

Table 13 - Overload Trip Class

Setting	Switch #11	Switch #12	Description
OFF	OFF	OFF	The controller incorporates, as standard, electronic overload protection. This motor overload protection is accomplished electronically by using internal current transformers on each of the three phases.
10	ON	OFF	
15	OFF	ON	
20	ON	ON	

Table 14 - Overload Reset

Setting	Switch #13	Description
Manual	OFF	In manual reset mode, the fault can only be reset by pushing the 'Push to Reset' button on the front of the controller. In auto reset mode, the unit automatically resets when the unit determines the motor has cooled to 75% of its thermal capacity.
Auto	ON	

Table 15 - Aux #1 Setting

Setting	Switch #14	Description
Normal	OFF	The operation defines the operation of the auxiliary contacts. Normal mode means that the contact changes state immediately when a start/run command is given. Up-to-Speed mode means that the contact changes state only when the controller is in bypass. Aux#2, when added, operates opposite of this programming.
Up-to-Speed	ON	

Table 16 - Motor Connection Type

Setting	Switch #15	Description
Delta	OFF	In Delta connection mode, the device is designed to control a 6- or 12-lead motor. In line connection mode, the device is designed to control a 3- or 9-lead motor.
Line	ON	

Table 17 - Stop Delay

Setting [seconds]	Switch #16	Description
0.0	OFF	When the delay is programmed, the motor continues to run for the programmed period of time after the run command is removed from the controller.
0.75	ON	

Motor FLA Requirements

The front of the SMC controller contains a dial that is used for setting the actual FLA of the motor. The label is designed to accommodate motors connected in the line or Delta mode. To determine the proper setting, look at the motor's nameplate and set the dial accordingly. The dial setting can be modified depending on the service factor of the motor.

Figure 11 - Motor FLA Setting

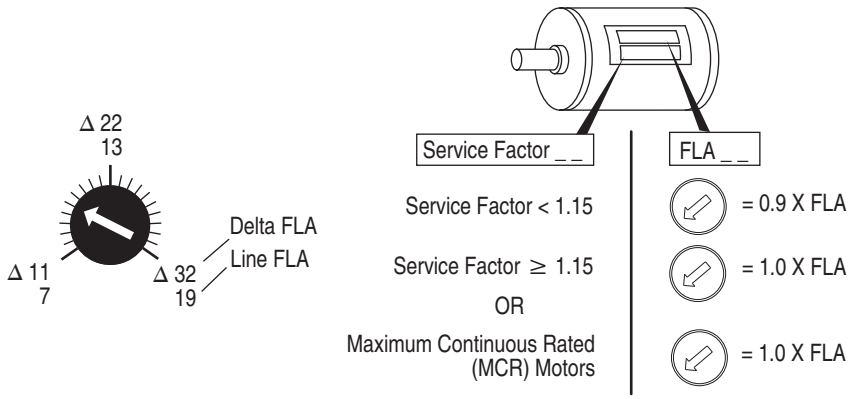

Motor Overload Trip Curves

The trip class should be set according to the motor's maximum permissible locked rotor time or the general thermal capabilities. Consult the motor manufacturer for recommendations on setting the trip class.

Figure 12 - Trip Class

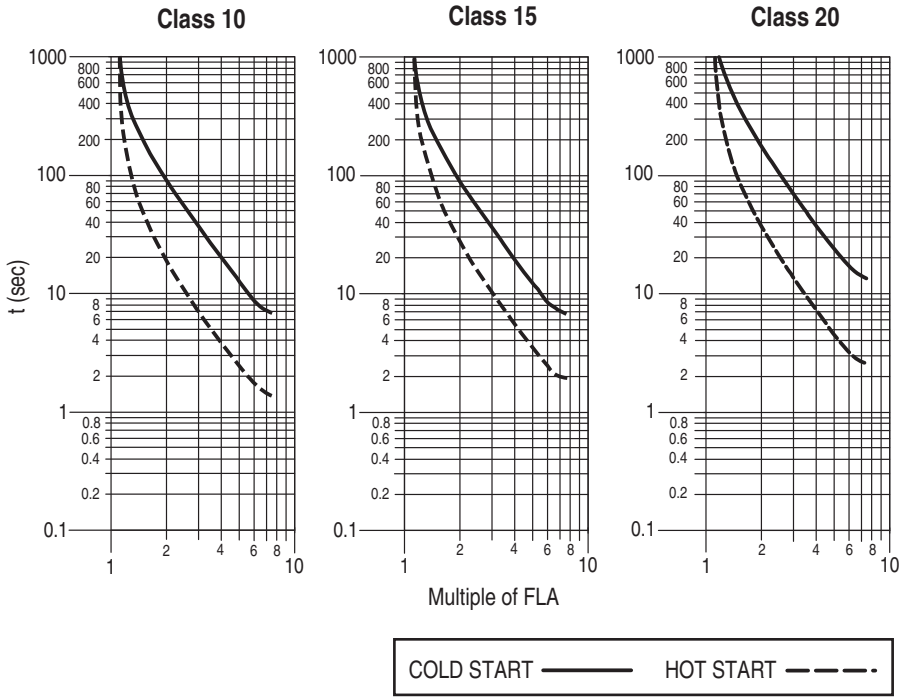

Input and Output Timing

Figure 13 - Input & Output Timing

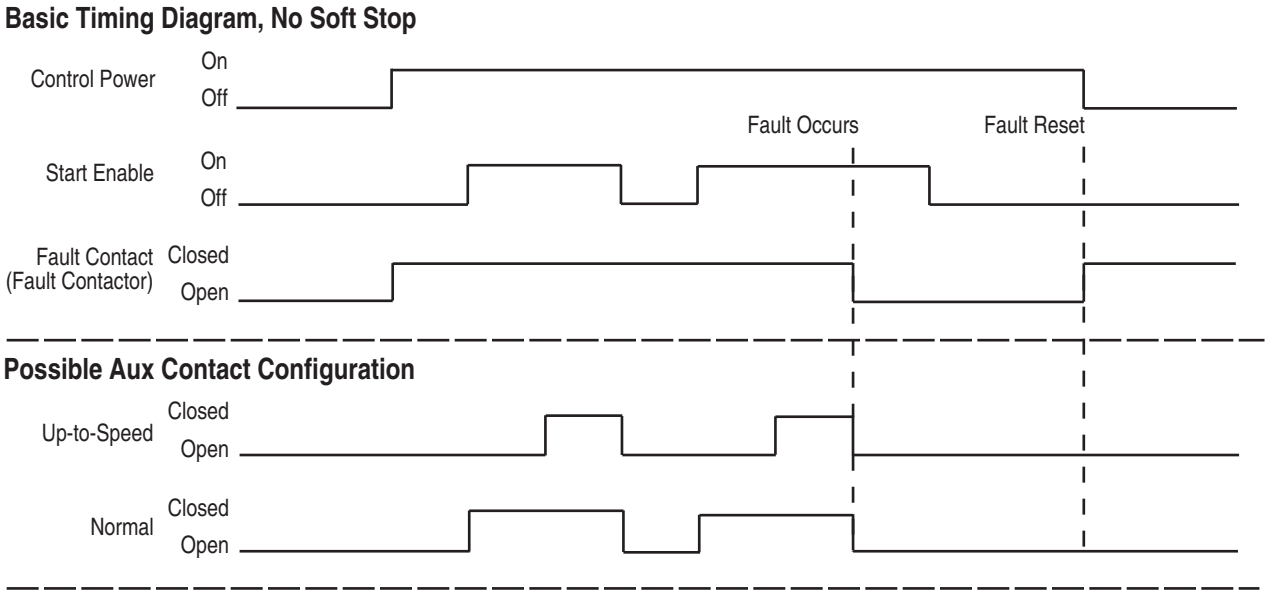

Troubleshooting

Introduction

The following topics are designed to assist in the troubleshooting and maintenance of the SMC™ controller. The items mentioned in this section are not intended to be all-inclusive and it is expected that these items should be used as reference only.

For safety of maintenance personnel as well as others who might be exposed to electrical hazards associated with maintenance activities, follow the local safety related work practices (such as NFPA 70E, Part II in the United States). Maintenance personnel must be trained in the safety practices, procedures, and requirements that pertain to their respective job assignments.



SHOCK HAZARD: Hazardous voltage is present in the motor circuit even when the 150-E controller is off. To avoid shock hazard, disconnect the main power before working on the controller, motor, and control devices (such as Start-Stop push buttons). Procedures that require parts of the equipment to be energized during troubleshooting, testing, etc., must be performed by properly qualified personnel, using appropriate local safety work practices and precautionary measures.



ATTENTION: Disconnect the controller from the motor before measuring insulation resistance (IR) of the motor windings. Voltages used for insulation resistance testing can cause SCR failure. Do not make any measurements on the controller with an IR tester (megger).

Diagnostics Indication

The LED status indicator on the front of the product provides limited status information regarding the condition of the controller. The conditions are as follows:

- LED Off — No control power or start command given.
- LED On — The device is active with starting, running, or stopping.
- LED Flashes — A fault has been experienced. Refer to table below for additional explanation.

Table 18 - LED Fault Indication & Diagnostics

Flashes	Fault Type	Possible Fault Explanations	Possible Solutions
1	Overload	• Motor overload condition present. • FLA dial adjustment is not matched to motor type.	• Check for motor overload condition. • Verify actual motor current does not exceed FLA. • Verify/reset the FLA dial adjustment. • Program/modify the overload setting for load or duty cycle required.
2	Overtemperature	• Controller ventilation blocked. • Controller duty cycle exceeded. • Cooling fan not working. • Ambient temperature exceeded. • Failed control module. • Over-current condition with Overload disabled.	• Check for proper ventilation. • Verify duty cycle. • Connect or replace cooling fan. • Wait for controller to cool or provide external cooling. • Replace control module.
3	Phase Reversal	• Incoming supply voltage is not the expected sequence.	• Check power wiring. • Adjust dip switch #9 for desired sequence.

Table 18 - LED Fault Indication & Diagnostics (Continued)

Flashes	Fault Type	Possible Fault Explanations	Possible Solutions
4	Phase Loss/ Open Load	• Missing Supply Phase. • Missing or unable to detect motor connection.	• Check for open line (open fuse). • Check for incorrect wiring to load. • Verify proper operation of the fault contactor. • Verify connection type to motor (line or Delta). • Ensure product is sized correctly for motor.
5	Phase Imbalance	• Unbalanced Phase Currents (> 65% differential). • Incoming line voltage problem.	• Check motor current in each phase to verify imbalance. Motor current imbalance can indicate potential motor problem.
6	Shorted SCR	• Shorted SCR. • Welded or latched bypass contactor.	• Verify connection type (line or Delta) and verify setting. • Perform continuity check across power poles (L1 – T1, L2 – T2, L3 - T3). Measurements should exceed 10 kΩ. For best results, remove line and load motor connections. • Cycle power to device and attempt to restart. If fault persists, replace device.
7	Test	• Intended operation.	• Reset fault.
12	Check Sum	• Internal software corruption.	• Replace device.

Troubleshooting Steps

Table 19 - Troubleshooting Steps

Control	Device Status	Solution
Prestart - no start command given but device is faulted.	LED Flashing	• Reset fault. • Allow device to cool (overload or SCR over temp). Reset fault. • Cycle power to device.
Motor fails to start after start command given.	LED Off	• Check control power. • Check control circuit connections.
	LED ON	• Verify proper operation of fault contactor or isolation devices. • Check connections to the motor. • Verify line power and frequency are within specifications.
	LED Flashing	• See Table 18 for information related to specific fault codes.
Motor attempts to start after start command is given, but fails to reach an up-to-speed condition.	LED ON	• Verify proper operation of the fault contactor or isolation devices. • Verify line power and frequency are within specifications. • Try increasing the initial torque or current limit setting.
	LED Flashing	• See Table 18 for information related to specific fault codes.
Motor stops abruptly and fails to restart.	LED Off	• Check for a blown fuse or tripped circuit breaker. • Ensure the control power and start command are present. • Verify proper operation of the fault contactor or isolation devices.
	LED ON	• Verify proper operation of the fault contactor or isolation devices.
	LED Flashing	• See Table 18 for information related to specific fault codes.
Fault contactor fails to close when power is applied.	All Conditions	• Verify wiring to the coil. The contactor should close when power is applied to the controller. • Verify voltage across the coil (A1 to A2). • Check the resistance of the coil. Replace, if measured open. • Verify internal contact of the controller (terminals 97/98) are properly changing state. Replace the controller if the contact does not operate correctly.

Renewal Parts

Table 20 - Renewal Part Cat. Nos.

Panel	Controller		Fan	Series B Devices		Series C Devices	
				Contactor	Contactor Coil	Contactor	Contactor Coil
150-E32NCE-FC	150-E32NCD		(optional) 150-CF64	100-C37D00	TC473	100-E40KD00	–
150-E51NCE-FC	150-E51NCD						
150-E64NCE-FC	150-E64NCD						
150-E74NCE-FC	150-E74NCD		150-CF147	100-C43D00	TD473	100-E52KD00	–
150-E104NCE-FC	150-E104NCD			100-C60D00	TE473	100-E65KD00	
150-E147NCE-FC	150-E147NCD			100-C85D00	TE473	100-E80KD00	
150-E234NCE-FC	Complete Device	150-E234NCD	41391-801-03	100-D180ED00	TGE865	100-E190KD11	TG907
	Control Module	150-ES1BX					
	Power Pole	150-FPP135C					
150-E32NCA-FC	150-E32NCD		(optional) 150-CF64	100-C37KA00	TC858	100-E40KD00	–
150-E51NCA-FC	150-E51NCD						
150-E64NCA-FC	150-E64NCD						
150-E74NCA-FC	150-E74NCD		150-CF147	100-C43KA00	TD858	100-E52KD00	–
150-E104NCA-FC	150-E104NCD			100-C60KA00	TE858	100-E65KD00	
150-E147NCA-FC	150-E147NCD			100-C85KA00	TE858	100-E80KD00	
150-E234NCA-FC	Complete Device	150-E234NCD	41391-801-03	100-D180EA00	TGE866	100-E190KD11	TG907
	Control Module	150-ES1BX					
	Power Pole	150-FPP135C					

Specifications

Electrical

Table 21 - Power Circuit

		UL/cUL/CSA	IEC
Rated Operational Voltage		200...600V AC	200...500V AC
Rated Insulation Voltage		600V AC	500V AC
Di-electric Withstand		2200V AC	2500V AC
Repetitive Peak		200...600V AC: 1600	500V AC: 1600
Rated Impulse Voltage		6 kV	
Overvoltage Category		III	
Number of Poles		Equipment designed for 3-phase only	
Operating Frequency		50/60 Hz	
Controller Utilization Category		32/52/64	AC-53b: 3.5-15:3585
		74/104/147	AC-53b: 4.5-30:1770
		234	AC-53b: 3.5-30:1770
		Line	**Delta**
Overload Current Range [A]	32	6.3...19	10.9...32.9
	51	10...30	17...51
	64	12.3...37	21.3...64
	74	14.3...43	24.7...74
	104	20...60	34.7...104
	147	28.3...85	49...147
	234	34...135	59...234

Table 22 - Control Circuit

		UL/cUL/CSA	IEC
Rated Operational Voltage		100...120V AC, 200...240V AC	120V AC, 240V AC
Rated Insulation Voltage		–	300V AC
Di-electric Withstand		–	3000V
Rated Impulse Voltage		3 kV	
Operating Frequency		50/60 Hz	
Control Power Requirements	32/52/64	215 mA @ 120V AC 180 mA @ 240V AC	
	74/104/147	200 mA @ 120V AC 100 mA @ 240V AC	
	234	200 mA @ 120V AC 120 mA @ 240V AC	
Fan Power Requirements	32/52/64	–	
	74/104/147	–	
	234	20VA	

Table 23 - Short-circuit Capabilities

Device Current Rating [A]	Type 1	
	Max Fuse Size & Type	Max Available Fault Rating
32	70 A - RK5	5 kA
	125 A - K5	5 kA
51	125 A - RK5	5 kA
	200 A - K5	10 kA
64	125 A - RK5	5 kA
	200 A - K5	10 kA
74	150 A - RK5	5 kA
	250 A - J	10 kA
104	200 A - RK5	5 kA
	400 A - J	10 kA
147	250 A - RK5	10 kA
	400 A - J	10 kA
234	400 A - RK5	10 kA
	450 A - K5	10 kA

Table 24 - Auxiliary Contacts (Fault & Aux #1)

	UL/cUL/CSA	IEC
Rated Operational Voltage	250V AC/30V DC	250V AC / 30V DC
Rated Insulation Voltage	250V	250V AC
Di-electric Withstand	—	4 kV
Rated Impulse Voltage	1500V AC	2000V AC
Operating Frequency	50/60 Hz	
Utilization Category	D300	AC-15/DC
Control Circuit Type	Electro-magnetic Relay	
Number of Contacts	1	
Contact Type	Normally Open (N.O.)	
Current Type	AC/DC	
Rated Operational Current (max)	0.6 A @ 120V AC and 0.3 A @ 240V AC	
Conventional Thermal Current (I_{th})	1 A	
Make/Break VA	432/72	

Mechanical

Table 25 - Mechanical

Attribute		Value
Resistance to Vibration	Operational	1.0 G Peak, 0.15 mm (0.006 in) displacement
	Non-Operational	2.5 G Peak, 0.38 mm (0.015 in) displacement
Resistance to Shock	Operational	15 G
	Non-Operational	5.5 G

Environmental

Table 26 - Environmental

Attribute	Value
Operating Temperature	0…50 °C (32…122 °F) Open
	0…40 °C (32…104 °F) Enclosed
Altitude	2000 m (6560 ft)
Humidity	5…95% (non-condensing)
Pollution Degree	2

Approximate Dimensions and Shipping Weights

Dimensions given are in mm (in.). Dimensions are not intended to be used for manufacturing purposes.

Figure 14 - Approximate Dimensions

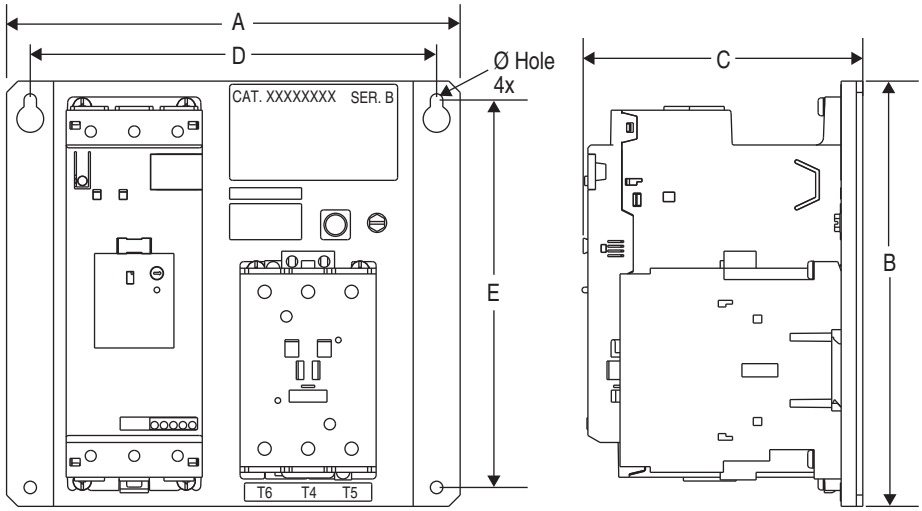

Table 27 - Dimensions & Shipping Weights

Controller Size [A]	A (Width)	B (Height)	C (Depth)	D	E	4 x Ø (Hole Diameter)	Approximate Weight
32/52/64	178 (7.01)	144 (5.67)	115.7 (4.56)	165.1 (6.5)	127 (5)	5.6 (0.22)	4 lbs (2 kg)
74/104/147	240 (9.45)	225 (8.86)	147.9 (5.82)	215 (8.46)	205 (8.07)	6.6 (0.26)	14 lbs (6 kg)
234	362 (14.25)	515 (20.28)	216.4 (8.52)	330.2 (13.0)	489.5 (19.27)	8.7 (0.343)	51 lbs (23 kg)

History of Changes

This appendix contains the new or updated information for each revision of this publication. These lists include substantive updates only and are not intended to reflect all changes. Translated versions are not always available for each revision.

150-UM009D-EN-P, February 2011

Topic
Update to European Communities (EC) Directive Compliance
Added 100-E contactor options for Series C devices
Updated C234 terminal torque specifications

Notes:

Notes:

Rockwell Automation Support

Use these resources to access support information.

Technical Support Center	Find help with how-to videos, FAQs, chat, user forums, and product notification updates.	rok.auto/support
Knowledgebase	Access Knowledgebase articles.	rok.auto/knowledgebase
Local Technical Support Phone Numbers	Locate the telephone number for your country.	rok.auto/phonesupport
Literature Library	Find installation instructions, manuals, brochures, and technical data publications.	rok.auto/literature
Product Compatibility and Download Center (PCDC)	Download firmware, associated files (such as AOP, EDS, and DTM), and access product release notes.	rok.auto/pcdc

Documentation Feedback

Your comments help us serve your documentation needs better. If you have any suggestions on how to improve our content, complete the form at rok.auto/docfeedback.

Waste Electrical and Electronic Equipment (WEEE)



At the end of life, this equipment should be collected separately from any unsorted municipal waste.

Rockwell Automation maintains current product environmental compliance information on its website at rok.auto/pec.

Allen-Bradley, expanding human possibility, Rockwell Automation, and SMC are trademarks of Rockwell Automation, Inc

Trademarks not belonging to Rockwell Automation are property of their respective companies.

Rockwell Otomasyon Ticaret A.Ş. Kar Plaza İş Merkezi E Blok Kat:6 34752, İçerenköy, İstanbul, Tel: +90 (216) 5698400 EEE Yönetmeliğine Uygundur

Connect with us.

rockwellautomation.com — expanding **human possibility**®

AMERICAS: Rockwell Automation, 1201 South Second Street, Milwaukee, WI 53204-2496 USA, Tel: (1) 414.382.2000, Fax: (1) 414.382.4444

EUROPE/MIDDLE EAST/AFRICA: Rockwell Automation NV, Pegasus Park, De Kleetlaan 12a, 1831 Diegem, Belgium, Tel: (32) 2 663 0600, Fax: (32) 2 663 0640

ASIA PACIFIC: Rockwell Automation, Level 14, Core F, Cyberport 3, 100 Cyberport Road, Hong Kong, Tel: (852) 2887 4788, Fax: (852) 2508 1846

Publication 150-UM009E-EN-P - August 2021

Supersedes Publication 150-UM009D-EN-P - February 2011

PN-40055-251-01 DIR 40055-251 (Version 05)

Copyright © 2021 Rockwell Automation, Inc. All rights reserved. Printed in the U.S.A.