Technical Data

Allen-Bradley

Bulletin 1411 Current Transformers

Catalog Numbers 1411-2*xxx*, 1411-8*xxx*, 1411-125, 1411-126, 1411-180, 1411-600, 1411-601, 1411-604, 1411-606, 1411-608, 1411-615, 1411-616, 1411-617, 1411-AL

Topic	Page
Summary of Changes	2
1411-2xxx Dimensions and Accuracy	2
1411-8xxx Dimensions and Accuracy	3
1411-125 Dimensions and Accuracy	5
1411-126 Dimensions and Accuracy	6
1411-180 Dimensions and Accuracy	7
1411-600 and 1411-601 Dimensions and Accuracy	9
1411-604 Dimensions and Accuracy	10
1411-606 and 1411-608 Dimensions and Accuracy	11
1411-615 Dimensions and Accuracy	12
1411-616 Dimensions and Accuracy	13
1411-617 Dimensions and Accuracy	14
1411-AL Dimensions and Accuracy	15
Agency Certifications	15

LISTEN.
THINK.
SOLVE.®

Allen-Bradley • Rockwell Software

Rockwell Automation

Allen Bradley 1411-606-601 | gesrepair.com

Summary of Changes

This publication contains new and updated information as indicated in the following table.

Table 1 - Summary of Changes

Topic	Page
Updated available catalog numbers.	Throughout

ATTENTION: Proper safety precautions must be followed during installation by a trained electrician. Never install while bus is energized. The current transformer must have its secondary terminals that are short circuited or the burden that is connected, before energizing the primary circuit.

1411-2*xxx* Dimensions and Accuracy

Figure 1 - 1411-2*xxx* Dimensions

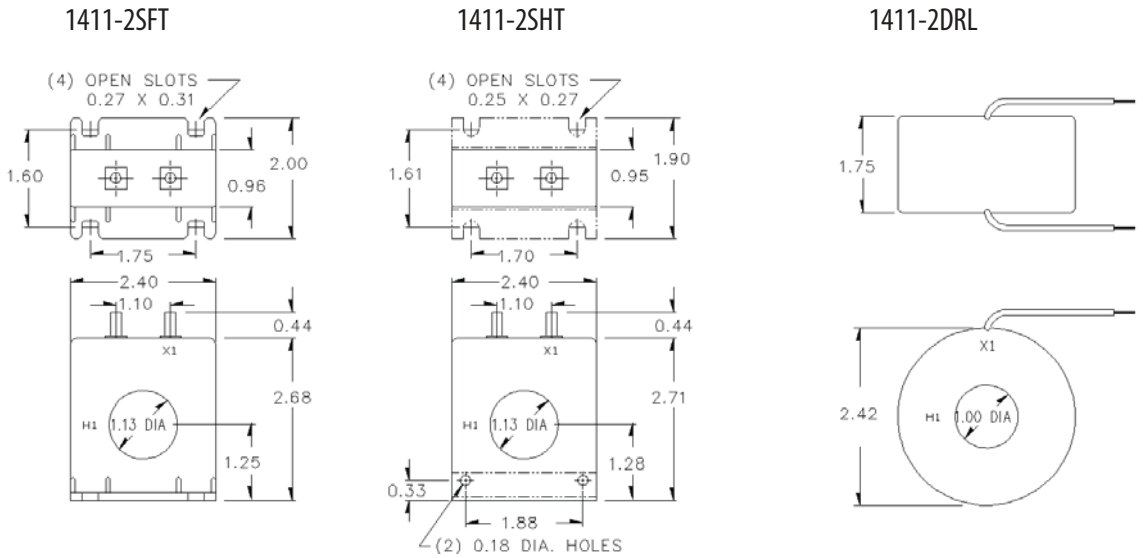

Table 2 - 1411-2*xxx* Accuracy

Cat. No.	Current Ratio	Models 2SFT, 2SHT		Model 2DRL	
		Accuracy at 60 Hz	Burden VA at 60 Hz	Accuracy at 60 Hz	Burden VA at 60 Hz
1411-2(1)-500	50:5	±3%	1.5	±2%	1.5
1411-2(1)-800	80:5	±2%	2.0	±2%	4.0
1411-2(1)-101	100:5	±1%	2.0	±1%	5.0
1411-2(1)-151	150:5	±1%	4.0	±1%	8.0
1411-2(1)- 201	200:5	±1%	4.0	±1%	10.0
1411-2(1)-301	300:5	±1%	8.0	±1%	15.0

(1) When ordering, prefix Cat No. with model designation required, for example, 1411-2SFT-301 or 1411-2DRL-301.

1411-8*xxx* Dimensions and Accuracy

Figure 2 - 1411-8*xxx* Dimensions

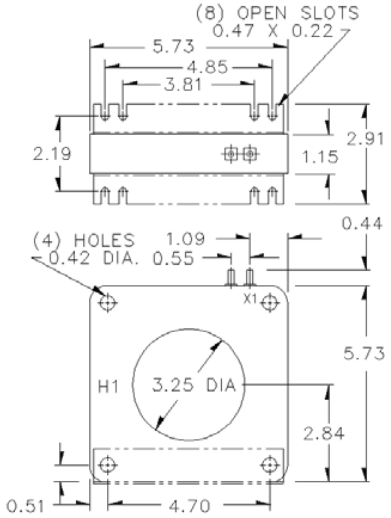

1411-8SHT

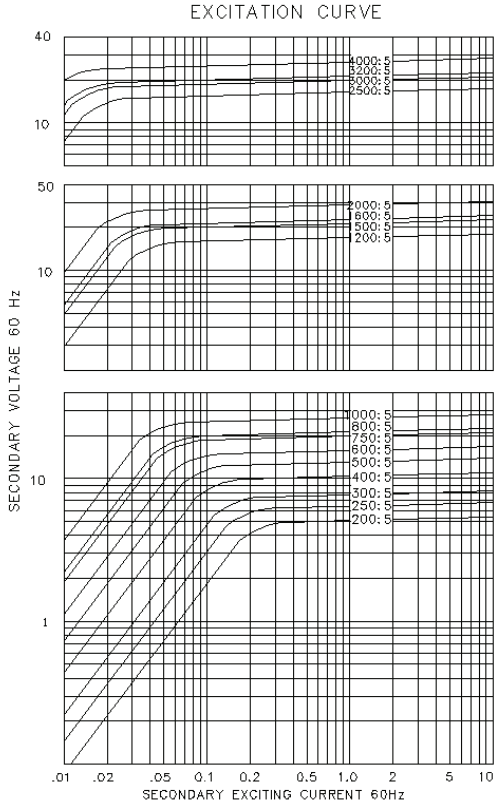

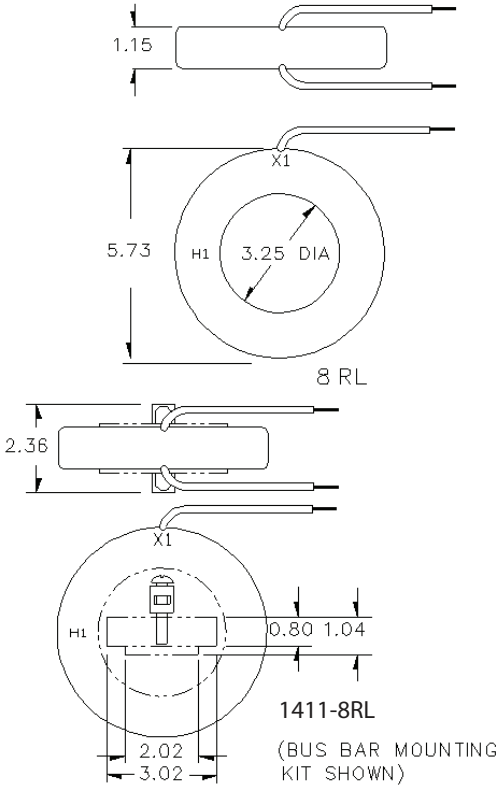

Table 3 - 1411-8*xxx* Accuracy

Cat. No.	Current Ratio	VA for ±1% Class	ANSI Metering Class at 60 Hz					Secondary Winding Resistance (ohms at 75 °C (167 °F))	Continuous Thermal Rating Factor	
			B0.1	B0.2	B0.5	B0.9	B1.8		at 30 °C (86 °F)	at 55 °C (131 °F)
1411-8(1)-201	200:5	5.0	1.2	1.2	2.4	4.8	4.8	0.030	2.0	2.0
1411-8(1)-301	300:5(2)	15.0	0.6	0.6	1.2	2.4	2.4	0.049	2.0	2.0
1411-8(1)-401	400:5(2)	25.0	0.3	0.3	0.6	1.2	2.4	0.079	2.0	1.5
1411-8(1)-601	600:5(2)	50.0	0.3	0.3	0.6	0.6	1.2	0.147	1.5	1.33
1411-8(1)-102	1000:5(2)	75.0	0.3	0.3	0.3	0.6	0.6	0.246	1.33	1.0
1411-8(1)-162	1600:5(2)	100.0	0.3	0.3	0.3	0.3	0.6	0.337	1.33	0.8
1411-8(1)-202	2000:5(2)	120.0	0.3	0.3	0.3	0.3	-	0.422	1.0	0.8
1411-8(1)-302	3000:5	60.0	0.3	0.3	0.3	0.3	-	0.526	1.0	0.8
1411-8(1)-402	4000:5	80.0	0.3	0.3	0.3	0.3	-	0.973	0.8	0.6

(1) When ordering, prefix catalog number with model designation required, for example, 1411-8SHT-201 or 1411-8RL-301.

(2) Approved for revenue metering by Industry Canada No. T-188.

1411-125 Dimensions and Accuracy

Figure 3 - 1411-125 Dimensions

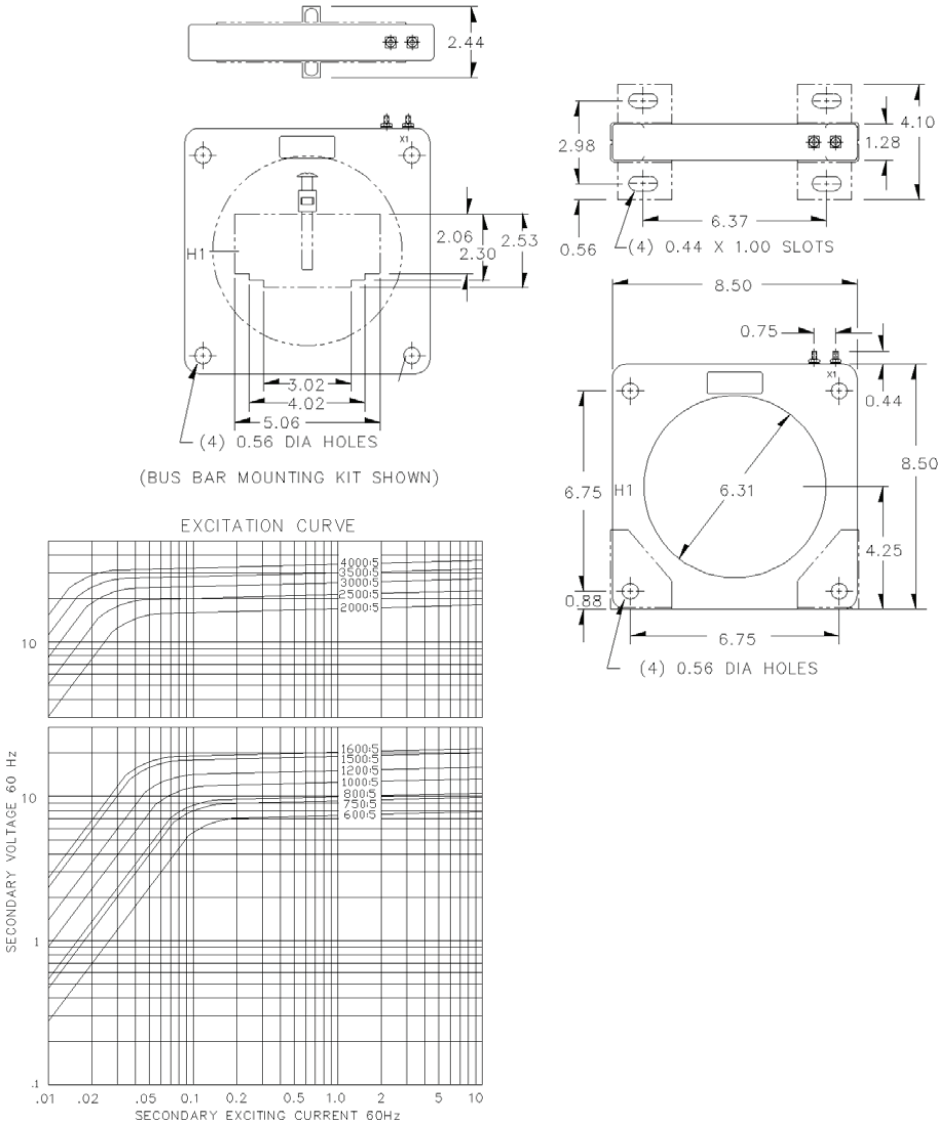

Table 4 - 1411-125 Accuracy

Cat. No.	Current Ratio	ANSI Metering Class at 60 Hz					Secondary Winding Resistance (ohms at 75 °C (167 °F))	Continuous Thermal Rating Factor	
		B0.1	B0.2	B0.5	B0.9	B1.8		at 30 °C (86 °F)	at 55°C (131 °F)
1411-125-102	1000:5	0.3	0.3	0.3	0.6	1.2	0.187	1.6	1.33
1411-125-162	1600:5	0.3	0.3	0.3	0.3	0.6	0.304	1.6	1.33
1411-125-202	2000:5	0.3	0.3	0.3	0.3	0.6	0.280	1.6	1.0
1411-125-302	3000:5	0.3	0.3	0.3	0.3	0.6	0.421	1.33	1.0
1411-125-402	4000:5	0.3	0.3	0.3	0.3	0.3	0.696	1.0	0.8

1411-126 Dimensions and Accuracy

Figure 4 - 1411-126 Dimensions

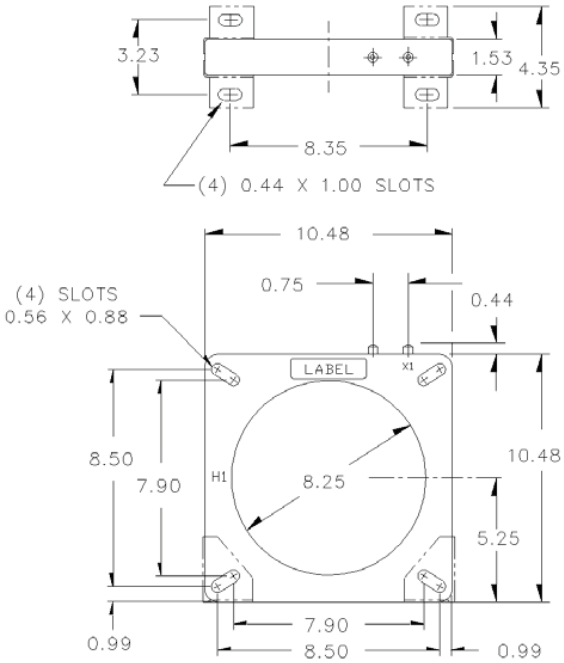

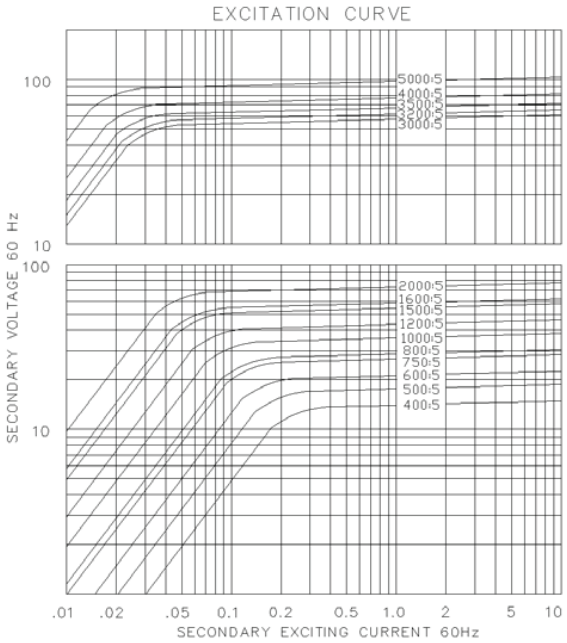

Table 5 - 1411-126 Accuracy

Cat. No.	Current Ratio	VA for ±1% Class	ANSI Metering Class at 60 Hz					Secondary Winding Resistance (ohms at 75 °C (167 °F))	Continuous Thermal Rating Factor	
			B0.1	B0.2	B0.5	B0.9	B1.8		at 30 °C (86 °F)	at 55 °C (131 °F)
1411-126 -401	400:5	4.0	0.6	1.2	2.4	2.4	4.8	0.116	2.0	2.0
1411-126-601	600:5	10.0	0.6	0.6	1.2	1.2	2.4	0.173	2.0	2.0
1411-126-102	1000:5	25.0	0.3	0.3	0.6	0.6	1.2	0.289	2.0	1.5
1411-126-162	1600:5	50.0	0.3	0.3	0.3	0.3	0.6	0.462	1.5	1.0
1411-126-202	2000:5	60.0	0.3	0.3	0.3	0.3	0.3	0.578	1.33	1.0
1411-126 -302	3000:5	90.0	0.3	0.3	0.3	0.3	0.3	0.722	1.33	1.0
1411-126-402	4000:5	126.0	0.3	0.3	0.3	0.3	0.3	0.962	1.0	0.8
1411-126-602	6000:5	140.0	0.3	0.3	0.3	0.3	0.3	1.278	1.0	0.8

1411-180 Dimensions and Accuracy

Figure 5 - 1411-180 Dimensions

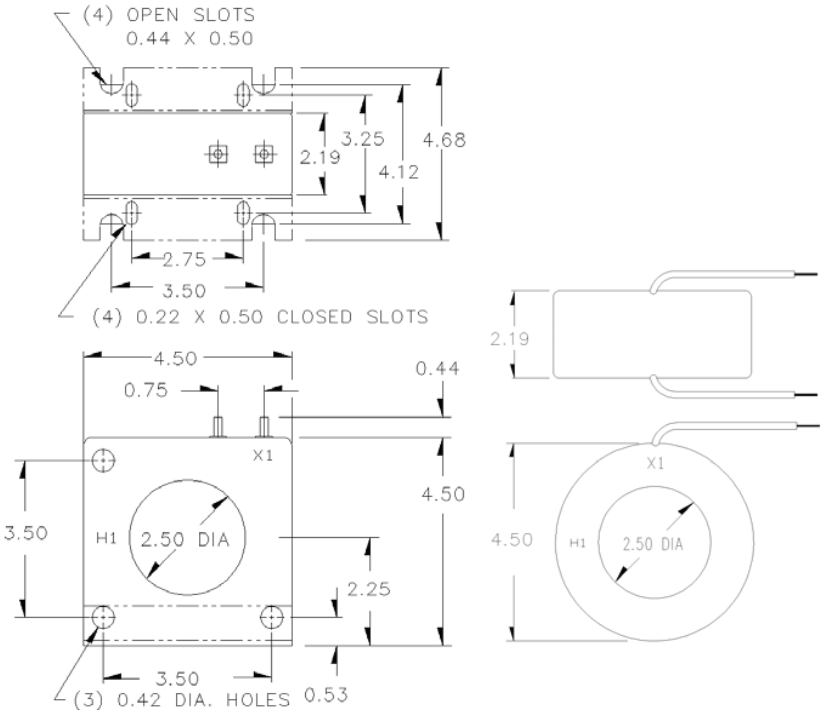

1411-180SHT

1411-180RL

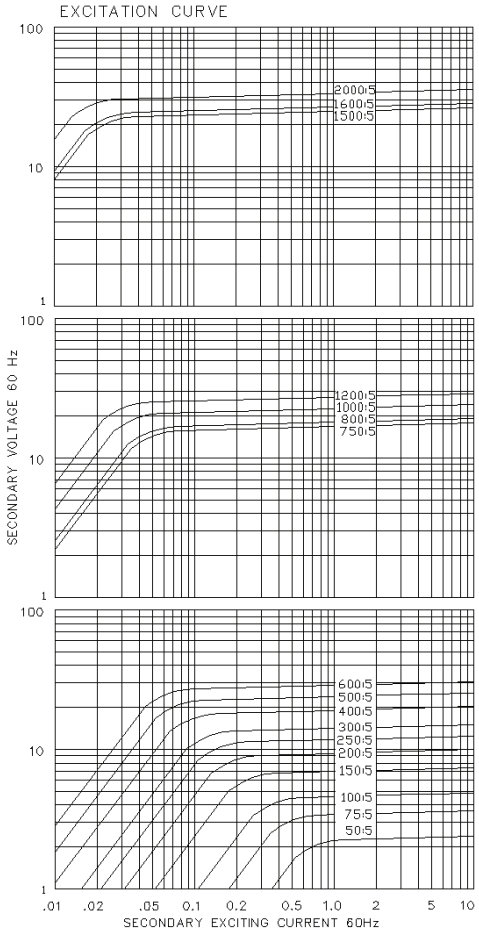

Table 6 - 1411-180 Accuracy

Cat. No.	Current Ratio	VA for ±1% Class	ANSI Metering Class at 60 Hz					Secondary Winding Resistance (ohms at 75 °C (167 °F))	Continuous Thermal Rating	
			B0.1	B0.2	B0.5	B0.9	B1.8		at 30 °C (86 °F)	at 55 °C (131 °F)
1411-180[1]-500	50:5	1.5	2.4	-	-	-	-	0.009	1.33	1.0
1411-180[1]-101	100:5	2.5	1.2	2.4	4.8	-	-	0.021	1.33	1.0
1411-180 [1]-151	150:5 [2]	5.0	0.6	1.2	2.4	4.8	-	0.038	1.33	1.0
1411-180[1]-201	200:5 [2]	12.5	0.6	0.6	1.2	2.4	-	0.051	1.33	1.0
1411-180[1]-301	300:5 [2]	25.0	0.3	0.3	0.6	1.2	2.4	0.076	1.33	1.0
1411-180[1]-401	400:5 [2]	50.0	0.3	0.3	0.3	0.6	1.2	0.102	1.33	1.0
1411-180[1]-601	600:5 [2]	50.0	0.3	0.3	0.3	0.6	1.2	0.177	1.33	1.0
1411-180 [1]-102	1000:5 [2]	100.0	0.3	0.3	0.3	0.3	0.6	0.253	1.33	1.0
1411-180[1]-162	1600:5 [2]	175.0	0.3	0.3	0.3	0.3	0.3	0.359	1.25	1.0
1411-180[1]-202	2000:5 [2]	200.0	0.3	0.3	0.3	0.3	0.3	0.449	1.0	0.75

(1) When ordering, prefix catalog number with model designation required, for example, 1411-180RL-301 or 1411-180SHT-301.

(2) Approved for revenue metering by Industry Canada. No. T-189.

1411-600 and 1411-601 Dimensions and Accuracy

Figure 6 - 1411-600 and 1411-601 Dimensions

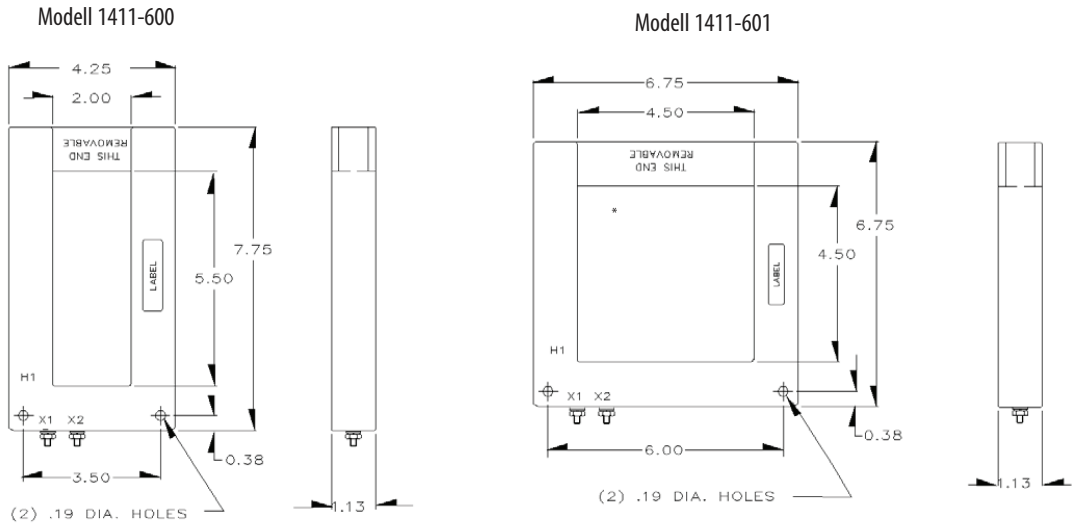

Table 7 - 1411-600 Accuracy

Cat. No.	Current Ratio	VA at 1% Class	ANSI Metering Class at 60 Hz		
			B0.1	B0.2	B0.5
1411-600-301	300:5 A	2.0	2.4	-	-
1411-600-401	400:5 A	1.5	2.4	4.8	-
1411-600-601	600:5 A	2.5	2.4	2.4	-
1411-600-102	1000:5 A	7.5	1.2	1.2	2.4
1411-600-162	1600:5 A	20.0	0.6	0.6	1.2
1411-600-202	2000:5 A	30.0	0.6	0.6	0.6

Table 8 - 1411-601 Accuracy

Cat. No.	Current Ratio	VA at 1% Class	ANSI Metering Class at 60 Hz		
			B0.1	B0.2	B0.5
1411-601-301	300:5	2.0	2.4	-	-
1411-601-401	400:5 A	1.0	4.8	-	-
1411-601-601	600:5 A	2.0	2.4		-
1411-601-102	1000:5 A	5.0	1.2	1.2	4.8
1411-601-162	1600:5 A	15.0	1.2	1.2	1.2
1411-601-202	2000:5 A	20.0	0.6	0.6	1.2

1411-604 Dimensions and Accuracy

Figure 7 - 1411-604 Dimensions

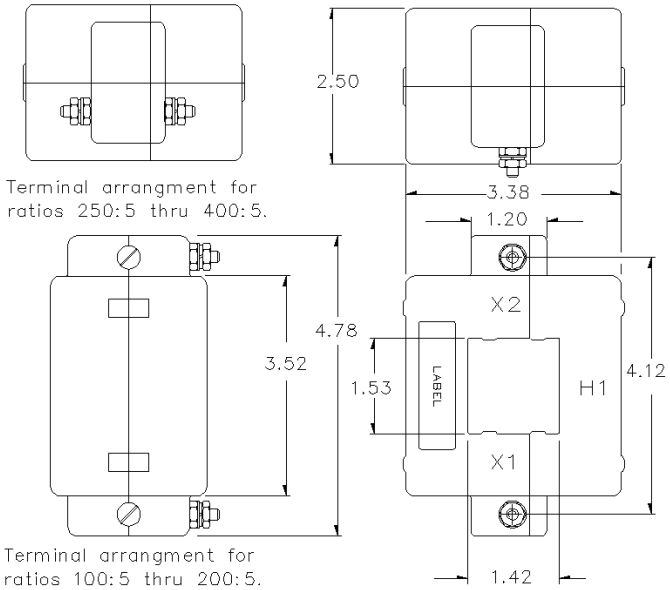

Table 9 - 1411-604 Accuracy

Cat. No.	Current Ratio	Burden VA	Accuracy
1411-604-101	100:5	1	±5%
1411-604-151	150:5	1	±4%
1411-604-201	200:5	1	±2%
1411-604-301	300:5	2	±1.5%
1411-604-401	400:5	2.5	±1.5%

1411-606 and 1411-608 Dimensions and Accuracy

Figure 8 - 1411-606 and 1411-608 Dimensions

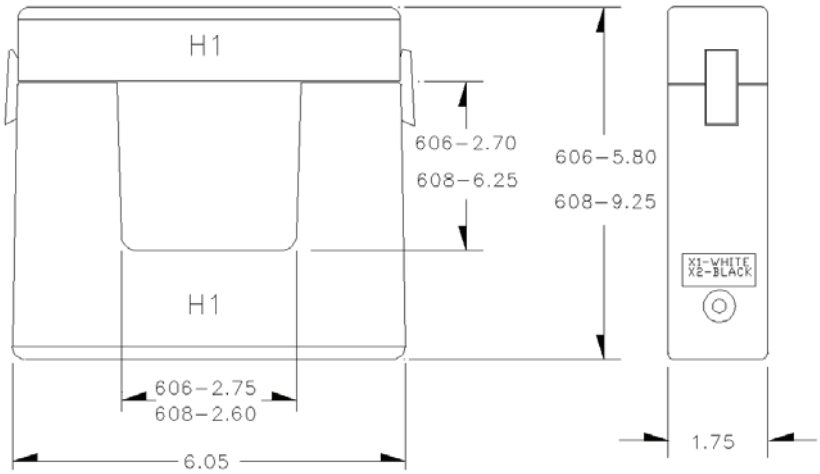

Table 10 - 1411-606 Accuracy

Cat. No.	Current Ratio	Burden VA	Accuracy at 60 Hz
1411-606-201	200:5	2.5	2%
1411-606-301	300:5	3.5	1%
1411-606-401	400:5	5	1%
1411-606-601	600:5	8	1%
1411-606-102	1000:5	15	1%
1411-606-122	1200:5	20	1%

Table 11 - 1411-608 Accuracy

Cat. No.	Current Ratio	Burden VA	Accuracy
1411-608-601	600:5	8	1%
1411-608-801	800:5	12	1%
1411-608-102	1000:5	13	1%
1411-608-162	1600:5	27	1%
1411-608-202	2000:5	33	1%
1411-608-302	3000:5	50	1%
1411-608-322	3200:5	54	1%

1411-615 Dimensions and Accuracy

Figure 9 - 1411-615 Dimensions

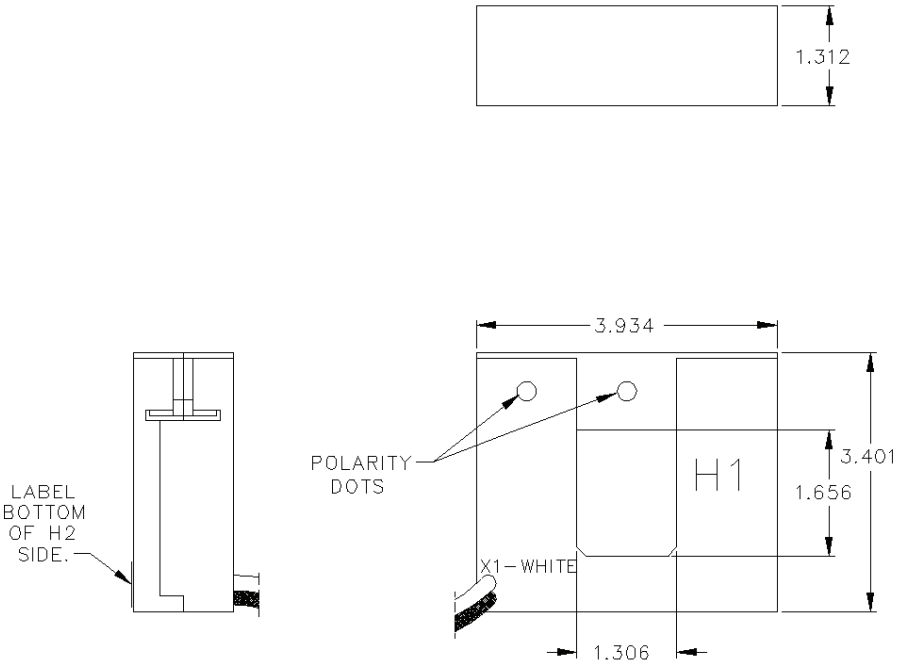

Table 12 - 1411-615 Accuracy

Cat. No.	Current Ratio	Burden VA	Accuracy
1411-615-101	100:5	1	5%
1411-615-201	200:5	2	3%
1411-615-301	300:5	3.5	1%
1411-615-401	400:5	8.5	1%

1411-616 Dimensions and Accuracy

Figure 10 - 1411-616 Dimensions

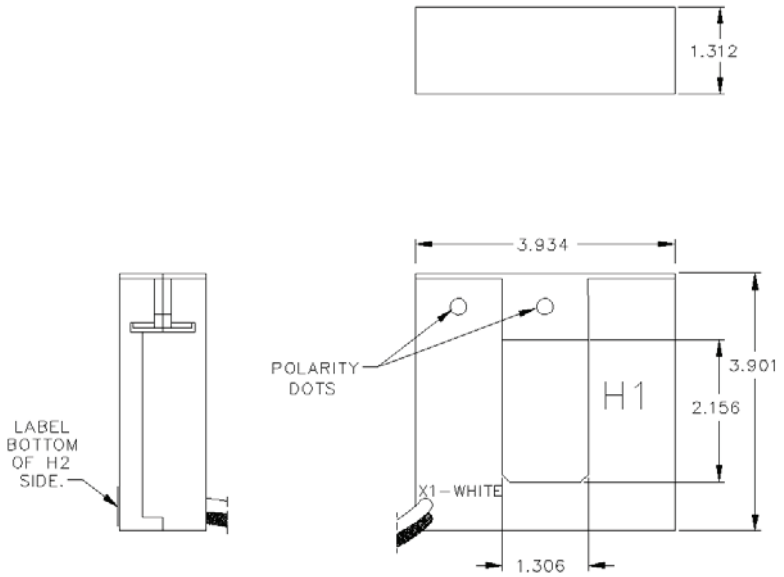

Table 13 - 1411-616 Accuracy

Cat. No.	Current Ratio	Burden	Accuracy
1411-616-201	200:5	2VA	3%
1411-616-401	400:5	5VA	1%
1411-616-801	800:5	5VA	1%

1411-617 Dimensions and Accuracy

Figure 11 - 1411-617 Dimensions

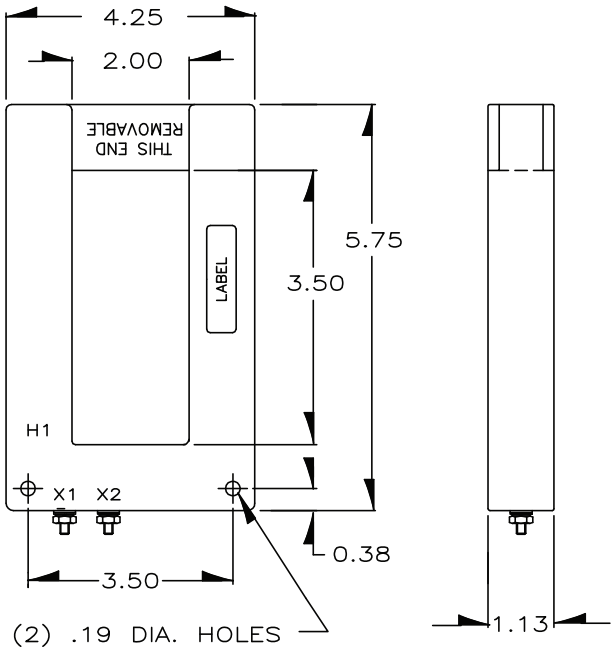

Table 14 - 1411-617 Accuracy

Cat. No.	Current Ratio	VA at 1% Class	ANSI Metering Class		
			B0.1	B0.2	B0.5
1411-617-401	400:5 A	1.5	2.4	4.8	-
1411-617-801	800:5 A	5.0	1.2	1.2	2.4
1411-617-102	1000:5 A	7.5	1.2	1.2	2.4
1411-617-122	1200:5 A	15.0	0.6	1.2	1.2

1411-AL Dimensions and Accuracy

Figure 12 - 1411-AL Dimensions

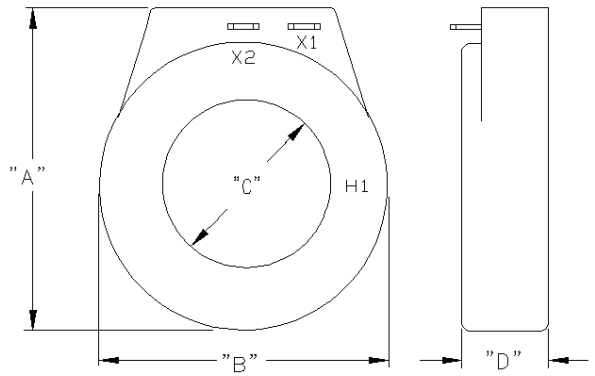

Table 15 - 1411-AL Accuracy

Cat. No.	Current Ratio	Accuracy at 60 Hz	Burden VA at 60 Hz
1411-AL-500	50:5	±3%	1.5
1411-AL-800	80:5	±2%	2.0
1411-AL-101	100:5	±1%	2.0
1411-AL-151	150:5	±1%	4.0
1411-AL-201	200:5	±1%	4.0
1411-AL-301	300:5	±1%	8.0
1411-AL-401	400:5	±1%	10.0

Agency Certifications

Cat. No.	1411-2xxx	1411-8xxx	1411-125	1411-126	1411-180	1411-600 and 1411-601	1411-604	1411-606	1411-608	1411-615	1411-616	1411-617	1411-AL
LR89403	X	X	X	X	X	X	X	X					
E93779	X	X	X	X	X	X	X	X	X	X	X	X	X
ANSI/IEEE C57.13	X	X	X	X	X	X	X	X	X	X	X	X	X
IEC 44-1	X	X	X	X	X	X	X	X	X	X	X	X	X

Additional Resources

These documents contain additional information concerning related products from Rockwell Automation.

Resource	Description
Bulletin 1411 Current Transformer Selection Matrix, publication 1411-SG001	Provides selection information for the current transformers.
Industrial Automation Wiring and Grounding Guidelines, publication 1770-4.1	Provides general guidelines for installing a Rockwell Automation industrial system.
Product Certifications website, http://www.rockwellautomation.com/global/certification/overview.page	Provides declarations of conformity, certificates, and other certification details.

You can view or download publications at http://www.rockwellautomation.com/global/literature-library/overview.page. To order paper copies of technical documentation, contact your local Allen-Bradley distributor or Rockwell Automation sales representative.

Notes:

Rockwell Automation Support

Use the following resources to access support information.

Technical Support Center	Knowledgebase Articles, How-to Videos, FAQs, Chat, User Forums, and Product Notification Updates.	www.rockwellautomation.com/knowledgebase
Local Technical Support Phone Numbers	Locate the phone number for your country.	www.rockwellautomation.com/global/support/get-support-now.page
Direct Dial Codes	Find the Direct Dial Code for your product. Use the code to route your call directly to a technical support engineer.	www.rockwellautomation.com/global/support/direct-dial.page
Literature Library	Installation Instructions, Manuals, Brochures, and Technical Data.	www.rockwellautomation.com/literature
Product Compatibility and Download Center (PCDC)	Get help determining how products interact, check features and capabilities, and find associated firmware.	www.rockwellautomation.com/global/support/pcdc.page

Documentation Feedback

Your comments will help us serve your documentation needs better. If you have any suggestions on how to improve this document, complete the How Are We Doing? form at http://literature.rockwellautomation.com/idc/groups/literature/documents/du/ra-du002_-en-e.pdf.

Rockwell Automation maintains current product environmental information on its website at http://www.rockwellautomation.com/rockwellautomation/about-us/sustainability-ethics/product-environmental-compliance.page.

Allen-Bradley, LISTEN. THINK. SOLVE., Rockwell Software, and Rockwell Automation are trademarks of Rockwell Automation, Inc.
Trademarks not belonging to Rockwell Automation are property of their respective companies.

Rockwell Otomasyon Ticaret A.Ş., Kar Plaza İş Merkezi E Blok Kat:6 34752 İçerenköy, İstanbul, Tel: +90 (216) 5698400

www.rockwellautomation.com

Power, Control and Information Solutions Headquarters

Americas: Rockwell Automation, 1201 South Second Street, Milwaukee, WI 53204-2496 USA, Tel: (1) 414.382.2000, Fax: (1) 414.382.4444
Europe/Middle East/Africa: Rockwell Automation NV, Pegasus Park, De Kleetlaan 12a, 1831 Diegem, Belgium, Tel: (32) 2 663 0600, Fax: (32) 2 663 0640
Asia Pacific: Rockwell Automation, Level 14, Core F, Cyberport 3, 100 Cyberport Road, Hong Kong, Tel: (852) 2887 4788, Fax: (852) 2508 1846

Publication 1411-TD001B-EN-P - June 2017
Supersedes Publication 1411-TD001A-EN-P - August 2013

Copyright © 2017 Rockwell Automation, Inc. All rights reserved. Printed in the U.S.A.