Product data sheet
Characteristics

XAPE305
drilled front plate - XAP-E - metal - 5 horizontal openings

Main

Range of product	Harmony XAP
Product or component type	Front plate with fixing screws
Device short name	XAPE
Product destination	For Ø 22 mm control and signalling units
Product front plate size	72 x 204 mm
Number of cut-out	5 cut-outs
Material	Anodised aluminium
Device mounting	Flush
IP degree of protection	IP65 conforming to IEC 60529 IP657 conforming to NF C 20-010
Resistance to chemical agents	Good resistant to acetone Good resistant to alcohols Good resistant to chloride and fluoride solvents Good resistant to diluted mineral acids Good resistant to oils and petrol Good resistant to organic acids Good resistant to salts

Complementary

Net weight	0.135 kg

Environment

Protective treatment	TH TC
Ambient air temperature for storage	-40…70 °C
Ambient air temperature for operation	-25…70 °C
Overvoltage category	Class I conforming to IEC 60536 Class I conforming to NF C 20-030

Disclaimer: This documentation is not intended as a substitute for and is not to be used for determining suitability or reliability of these products for specific user applications

Packing Units

Unit Type of Package 1	PCE
Number of Units in Package 1	1
Package 1 Weight	162 g
Package 1 Height	1.8 cm
Package 1 width	13.9 cm
Package 1 Length	23 cm
Unit Type of Package 2	S02
Number of Units in Package 2	21
Package 2 Weight	3.708 kg
Package 2 Height	15 cm
Package 2 width	30 cm
Package 2 Length	40 cm

Offer Sustainability

Sustainable offer status	Green Premium product
REACh free of SVHC	Yes
EU RoHS Directive	Pro-active compliance (Product out of EU RoHS legal scope) EU RoHS Declaration
Toxic heavy metal free	Yes
Mercury free	Yes
RoHS exemption information	Yes
China RoHS Regulation	China RoHS declaration
Environmental Disclosure	Product Environmental Profile
Circularity Profile	End of Life Information

Contractual warranty

Warranty	18 months

Life Is On Schneider Electric

XAPE305

Dimensions and Fixing

Below drawing shows a front plate with 4 cut-outs. Refer to the product characteristics to get the number of cut-outs.

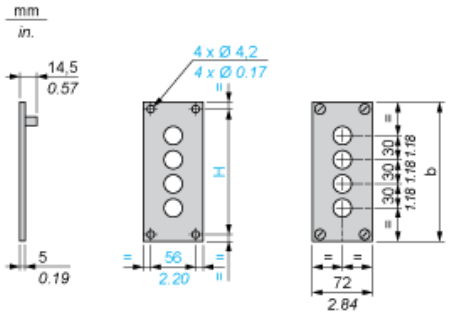

Panel cut-out

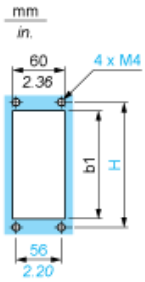

b		b1		H	
mm	in.	mm	in.	mm	in.
204	8.03	176	6.93	188	7.40