Product data sheet
Characteristics

XAPA1120
empty control station - XAP-A - plastic - 2 horizontal openings

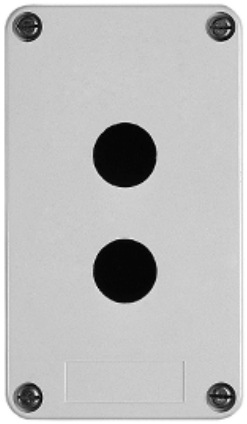

Main

Range of product	Harmony XAP
Product or component type	Empty control station without hinges
Device short name	XAPA
Product destination	For Ø 22 mm control and signalling units
Product front plate size	85 x 146 mm
Usable depth	83 mm
Number of cut-out	4 cut-outs
Colour of base of enclosure	Grey
Colour of cover	Grey
Material	Glass reinforced polyester
Cable entry	Undrilled
Device mounting	Flush
IP degree of protection	IP65 conforming to IEC 60529 IP69 conforming to NF C 20-010 IP69K
Resistance to chemical agents	High resistant to acids High resistant to all solvents High resistant to bases High resistant to diesel High resistant to mineral salts High resistant to oils and greases High resistant to petrol High resistant to sea water

Complementary

Number of vertical rows	1
Flame retardance	M3 conforming to CSTB VO conforming to UL 94
Net weight	0.46 kg

Disclaimer: This documentation is not intended as a substitute for and is not to be used for determining suitability or reliability of these products for specific user applications

Environment

Protective treatment	TC TH
Ambient air temperature for storage	-40…70 °C
Ambient air temperature for operation	-40…70 °C
Overvoltage category	Class II conforming to IEC 60536 Class II conforming to NF C 20-030
Fire resistance	850 °C conforming to NF C 20-455 960 °C conforming to IEC 92

Packing Units

Package 1 Weight	0.506 kg
Package 1 Height	1.350 dm
Package 1 width	0.900 dm
Package 1 Length	1.550 dm

Offer Sustainability

Sustainable offer status	Green Premium product
REACh free of SVHC	Yes
EU RoHS Directive	Pro-active compliance (Product out of EU RoHS legal scope) EU RoHS Declaration
Toxic heavy metal free	Yes
Mercury free	Yes
RoHS exemption information	Yes
China RoHS Regulation	China RoHS declaration
Environmental Disclosure	Product Environmental Profile
Circularity Profile	End of Life Information

Contractual warranty

Warranty	18 months

Dimensions and Fixing

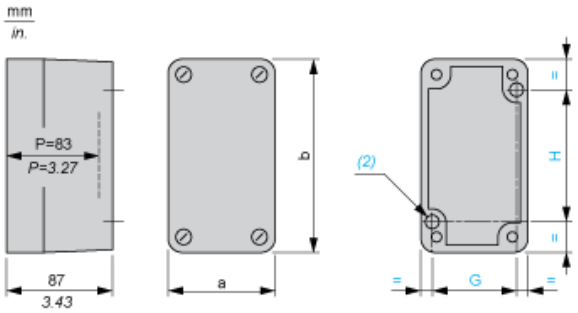

(2) 2 x Ø 5.6 mm/0.22 in. holes, depth 12 mm/0.47 in.
P Usable depth

a		b		G		H	
mm	in.	mm	in.	mm	in.	mm	in.
85	3.35	146	5.75	70	2.76	105	4.13

Refer to the product characteristics to get the number of cut-outs.

Cut-out interaxis dimensions

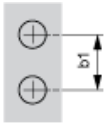

b1 Vertical interaxis: 40 mm/1.57 in.