Product data sheet
Characteristics

KRC1600ER47
CANALIS KR 4X1600CU STRAIGHT FEED UNIT ER7

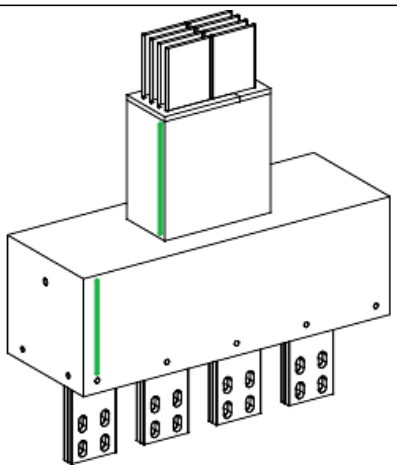

Main

Range	Canalis
Product name	KR
Product or component type	Straight feeder trunking
Device short name	KRC
Product specific application	Healthcare Real estate and office buildings Mining minerals and metals Water and waste water Oil and gas Enterprise data centres
Device application	Feeder length
Supply	Switchboard Oil-immersed transformer
Material	Copper
[Ie] rated operational current	1600 A at 35 °C
Busbar/Connection pads direction type	Flat to straight
Earth conductor	Standard earth
Short-circuit level	Standard version

Complementary

Housing material	Mineral epoxy resin
Contacts material	Tinned copper
[Ue] rated operational voltage	1000 V
Network frequency	50/60 Hz
[Ui] rated insulation voltage	1000 V
[Icw] rated short-time withstand current	65 kA
[Ipk] rated peak withstand current	143 kA
Radiated magnetic field	14.68 mT

Disclaimer: This documentation is not intended as a substitute for and is not to be used for determining suitability or reliability of these products for specific user applications

Thermal stress limit	4225 A².s
Maximum voltage drop	<0.007 V with power factor = 1 at 50 Hz with 1A for 100 m long <0.01 V with power factor = 0.9 at 50 Hz with 1A for 100 m long <0.01 V with power factor = 0.8 at 50 Hz with 1A for 100 m long <0.011 V with power factor = 0.7 at 50 Hz with 1A for 100 m long
Mounting location	Indoor Outdoor
Busbar incoming	Vertical
Polarity	3L + N or 3L + PE or 3L + PEN
Product certifications	EAC CE ATEX
Standards	IEC 61439-6
Dimension type	Made to measure
Colour	Grey (RAL 7030)
Linear load	48 kg/m

Environment

IP degree of protection	IP68 conforming to IEC 60529
IK degree of protection	IK10 conforming to IEC 62262
Pollution degree	3
Fire resistance	760 °C 180 min conforming to IEC 60331-1
Derating factor	0…35 °C (100 % of In) 35…40 °C (96 % of In) 40…45 °C (89 % of In) 45…50 °C (84 % of In) 50…55 °C (78 % of In)
Operating altitude	1000 m 100 % of In (indoor) 2000 m 99 % of In (indoor) 3000 m 96 % of In (indoor) 4000 m 90 % of In (indoor) 1000 m 98 % of In (outdoor) 2000 m 94 % of In (outdoor) 3000 m 89 % of In (outdoor) 4000 m 83 % of In (outdoor)
Environmental characteristic	EMC directive conforming to IEC 61439-6 Halogen free

Packing Units

Unit Type of Package 1	PCE
Number of Units in Package 1	1
Package 1 Weight	95.76 kg
Package 1 Height	25 cm
Package 1 width	70 cm
Package 1 Length	120 cm

Offer Sustainability

Sustainable offer status	Green Premium product
REACh free of SVHC	Yes
EU RoHS Directive	Compliant EU RoHS Declaration
Toxic heavy metal free	Yes
Mercury free	Yes
RoHS exemption information	Yes
China RoHS Regulation	China RoHS declaration Pro-active China RoHS declaration (out of China RoHS legal scope)
Environmental Disclosure	Product Environmental Profile
Circularity Profile	End of Life Information

WEEE	The product must be disposed on European Union markets following specific waste collection and never end up in rubbish bins
Halogen content performance	Halogen free product