Product data sheet
Characteristics

KRA1600ER57
CANALIS KR 5X1600AL STRAIGHT FEED UNIT ER7

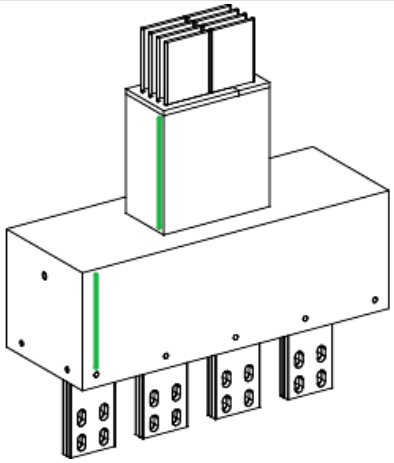

Main

Range	Canalis
Product name	KR
Product or component type	Straight feeder trunking
Device short name	KRA
Product specific application	Water and waste water Oil and gas Real estate and office buildings Mining minerals and metals Enterprise data centres Healthcare
Device application	Feeder length
Supply	Oil-immersed transformer Switchboard
Material	Aluminium
[Ie] rated operational current	1600 A at 35 °C
Busbar/Connection pads direction type	Flat to straight
Earth conductor	Standard earth
Short-circuit level	Standard version

Complementary

Housing material	Mineral epoxy resin
Contacts material	Tinned aluminium
[Ue] rated operational voltage	1000 V
Network frequency	50/60 Hz
[Ui] rated insulation voltage	1000 V
[Icw] rated short-time withstand current	53 kA
[Ipk] rated peak withstand current	117 kA
Radiated magnetic field	17.3 mT

Disclaimer: This documentation is not intended as a substitute for and is not to be used for determining suitability or reliability of these products for specific user applications

Thermal stress limit	2809 A².s
Maximum voltage drop	<0.0062 V with power factor = 1 at 50 Hz with 1A for 100 m long <0.0091 V with power factor = 0.9 at 50 Hz with 1A for 100 m long <0.0098 V with power factor = 0.8 at 50 Hz with 1A for 100 m long <0.0101 V with power factor = 0.7 at 50 Hz with 1A for 100 m long
Mounting location	Outdoor Indoor
Busbar incoming	Vertical
Polarity	3L + N + PE
Product certifications	CE ATEX EAC
Standards	IEC 61439-6
Dimension type	Made to measure
Colour	Grey (RAL 7030)
Linear load	58 kg/m

Environment

IP degree of protection	IP68 conforming to IEC 60529
IK degree of protection	IK10 conforming to IEC 62262
Pollution degree	3
Fire resistance	760 °C 180 min conforming to IEC 60331-1
Derating factor	0…35 °C (100 % of In) 35…40 °C (96 % of In) 40…45 °C (89 % of In) 45…50 °C (84 % of In) 50…55 °C (78 % of In)
Operating altitude	1000 m 100 % of In (indoor) 2000 m 99 % of In (indoor) 3000 m 96 % of In (indoor) 4000 m 90 % of In (indoor) 1000 m 98 % of In (outdoor) 2000 m 94 % of In (outdoor) 3000 m 89 % of In (outdoor) 4000 m 83 % of In (outdoor)
Environmental characteristic	EMC directive conforming to IEC 61439-6 Halogen free

Packing Units

Unit Type of Package 1	PCE
Number of Units in Package 1	1
Package 1 Weight	115.71 kg
Package 1 Height	25 cm
Package 1 width	70 cm
Package 1 Length	120 cm

Offer Sustainability

Sustainable offer status	Green Premium product
REACh free of SVHC	Yes
EU RoHS Directive	Compliant EU RoHS Declaration
Toxic heavy metal free	Yes
Mercury free	Yes
RoHS exemption information	Yes
China RoHS Regulation	China RoHS declaration Pro-active China RoHS declaration (out of China RoHS legal scope)
Environmental Disclosure	Product Environmental Profile
Circularity Profile	End of Life Information

WEEE	The product must be disposed on European Union markets following specific waste collection and never end up in rubbish bins
Halogen content performance	Halogen free product