Technical Data

Allen-Bradley

NEMA Manual Starting Switch Specifications

Bulletin Numbers 600, 609, 609U

Topic	Page
Product Overview and Specifications	2
600 Approximate Dimensions	3
609, 609U Approximate Dimensions	4…5

Additional Resources

These documents contain additional information concerning related products from Rockwell Automation.

Resource	Description
Industrial Automation Wiring and Grounding Guidelines, publication 1770-4.1	Provides general guidelines for installing a Rockwell Automation industrial system.
Product Certifications website, http://www.ab.com	Provides declarations of conformity, certificates, and other certification details.

You can view or download publications at http://www.rockwellautomation.com/literature/. To order paper copies of technical documentation, contact your local Allen-Bradley distributor or Rockwell Automation sales representative.

Manual Motor Starters

Bulletin	**600**	**609**	**609U**
Features	• Single-phase switch • Used on compressors, fans, pumps, and table saws	• Single- and three-phase switches • Contact position indicator • Locking feature • Reversing and 2-speed	• Single- and three-phase switches • Contact position indicator • Locking feature • Undervoltage protection
Type of Operator **1-Phase Motor Voltage** Push Button/ Toggle Lever/ Key	**Single Pole:** 115…230V AC (1 Hp) **Two Pole:** 115…230V AC (1 Hp)	115…230V AC, 60 Hz (1…5 Hp)	115…230V AC, 60 Hz (1…5 Hp)
Type of Operator **3-Phase Motor Voltage** Push Button / Toggle Lever	—	115…230V AC, 60 Hz (3…10 Hp)	115…230V AC, 60 Hz (3…10 Hp)
Enclosures NEMA Type	1, 4, 7 & 9	1, 3R, 4/4X, 7 & 9, and 12	1, 3R, 4/4X, 7 & 9, and 12

Group Fusing

The Bulletin 609 sizes 0 and 1 in Type 1, 4X, and 12 enclosures are UL Listed for group fusing with Class J fuses only. See table below for maximum fuse ratings.

The Bulletin 609U and 609TU Sizes 0 and 1 in Type 1, 4/4X, and 3R/12 enclosures are UL Listed for group fusing with Class J fuses only. See table below for maximum fuse ratings.

Full Load Current of Smallest Motor Amperes [A]	Maximum Fuse Ratings [A]	
	Nominal System Voltages	
	120…240V	480…600V
0.45…2.99	30	30
3.00…6.49	60	30
6.50…18.0	100	—

609U and 609TU Typical Wiring Diagram

(See Applicable Codes and Laws)

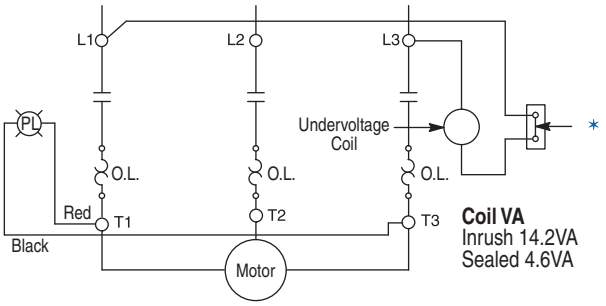

★Remove Jumper "A" to connect remote stop operator wires to vacated terminals.
Note: Jumper not available on devices in Type 7 and 9 Enclosure.

Dimensions are shown in inches (millimeters). Dimensions are not intended to be used for manufacturing purposes.

Open Type without Enclosure

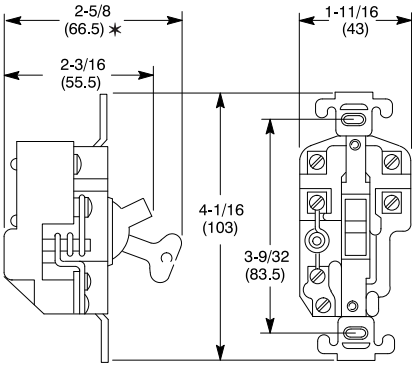

Cat. Nos.

600- TOX4 600- TOX109 600- TOX216
TOX5 TOX110
TOX49 TOX149

Type 1 General Purpose Enclosure Surface Mounting

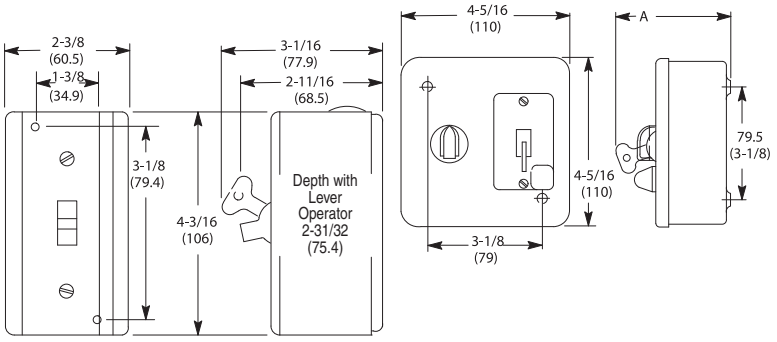

Cat. Nos.

600- TAX4 600- TAX49 600- TAX142
TAX5 TAX109 TAX145
TAX9 TAX110 TAX149
TAX10 TAX142 TAX216

Dimension A in inches (millimeters)	
Key Inserted	1-1/8 (79.5)
Selector Switch	2-3/4 (70)
Toggle Operator	2-9/16 (65)

Type 1 General Purpose Enclosure Flush Mounting

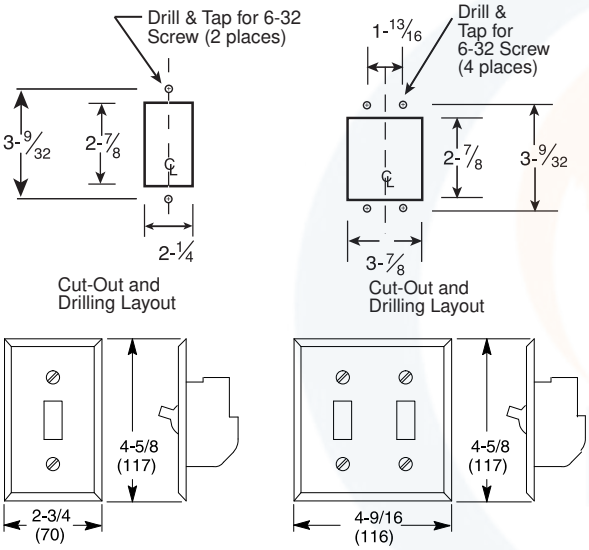

Cat. Nos.

600- TQX4
TQX5
TQX9

600- TQX49
TQX109
TQX110

600- TQX142
TQX144
TQX216

Type 4 Watertight Enclosure; Type 7 and 9 Hazardous Locations Enclosure

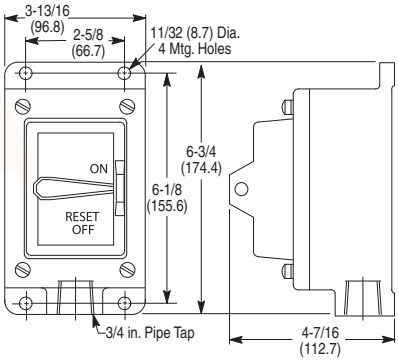

Cat. Nos.

600- TCX5 600- TEX5

Type 4 Watertight Enclosure, Type 7 & 9

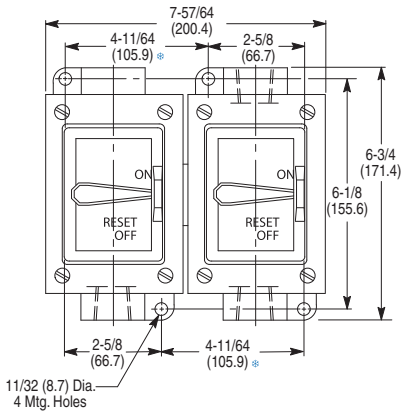

Cat. Nos.

600- TCX9 600- TEX9
TCX142 TEX10

Type 7 & 9 Hazardous Locations Enclosure

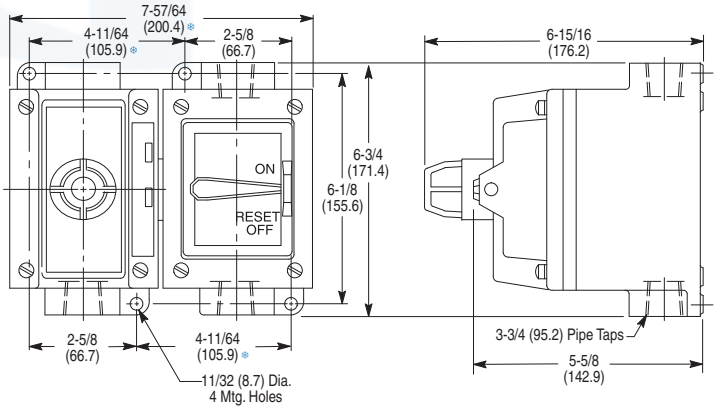

Cat. Nos.

600- TCA7 600- TEA7
TCD75 TED7

★ Lever Type Dimension is 2-17/32 in. (64.5 mm).
❄ This dimension may vary up to ±1/8 in. (3.2 mm). Mounting holes should be located at time of installation using device as a template.